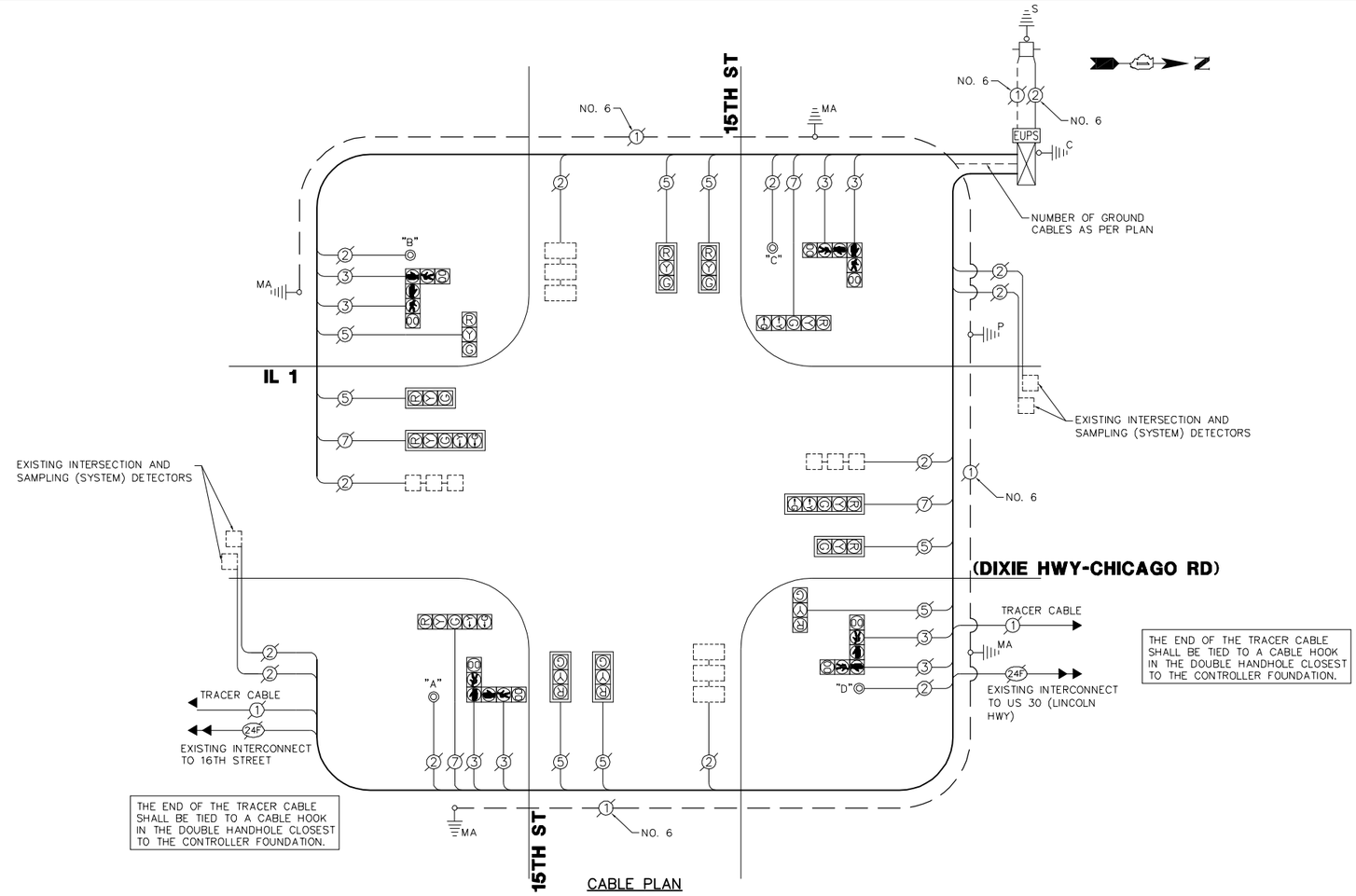

CABLE PLAN

FOR INFORMATION ONLY

EXISTING CONTROLLER SEQUENCE

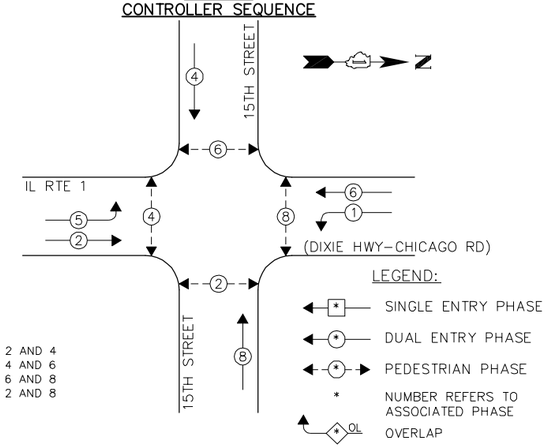

EXISTING PHASE DESIGNATION DIAGRAM

PUSH BUTTON NOTES:

PUSH BUTTON "A" SHALL PLACE A CALL IN PHASES 2 AND 4
PUSH BUTTON "B" SHALL PLACE A CALL IN PHASES 4 AND 6
PUSH BUTTON "C" SHALL PLACE A CALL IN PHASES 6 AND 8
PUSH BUTTON "D" SHALL PLACE A CALL IN PHASES 2 AND 8

I.D.O.T. TRAFFIC SIGNAL INSTALLATION ELECTRICAL SERVICE REQUIREMENTS					TOTAL WATTAGE
		WATTAGE			
TYPE	NO. LAMPS	INCAND.	L.E.D.	% OPERATION	
SIGNAL (RED)	12	135	17	0.50	102.00
SIGNAL (YELLOW)	12	135	25	0.25	75.00
SIGNAL (GREEN)	12	135	15	0.25	45.00
ARROW	8	135	12	0.10	9.60
PED. SIGNAL	8	90	25	1.00	200.00
CONTROLLER	1	100	100	1.00	100.00
ILLUM. SIGN	–	84	–	0.05	–
	–	–	–	–	–
	–	–	–	–	–
	–	–	–	–	–
FLASHER	–	–	–	0.50	–
				TOTAL =	531.60

ENERGY COSTS – BILLED TO: –
(ADDRESS) –
(ADDRESS) –
ENERGY SUPPLY – CONTACT: –
PHONE: 708–410–5069
COMPANY: COM. EDISON

THE TRAFFIC SIGNAL CONTROL EQUIPMENT FOR THIS PROJECT SHALL BE "EAGLE" TO MATCH THE EXISTING ADJACENT SYSTEM.

GHA #4085.883

FILE NAME = 4085.883-Cable.dwg	USER NAME = ZACH WALLSTEN	DESIGNED – –	REVISED –	STATE OF ILLINOIS DEPARTMENT OF TRANSPORTATION	CABLE PLAN AND PHASE DESIGNATION DIAGRAM IL 1 (DIXIE HWY-CHICAGO RD) AT 15TH STREET	F.A.P. RTE.	SECTION	COUNTY	TOTAL SHEETS / SHEET NO.
		DRAWN – –	REVISED –			876	2012–038TS	COOK	43 / 14
	PLOT SCALE = 1" = .0833'	CHECKED – –	REVISED –					CONTRACT #:	60T86
	PLOT DATE = 6/28/2012	DATE – 6/28/2012	REVISED –		SCALE: N.A. / SHEET NO. OF SHEETS / STA. TO STA.			ILLINOIS FED. AID PROJECT	