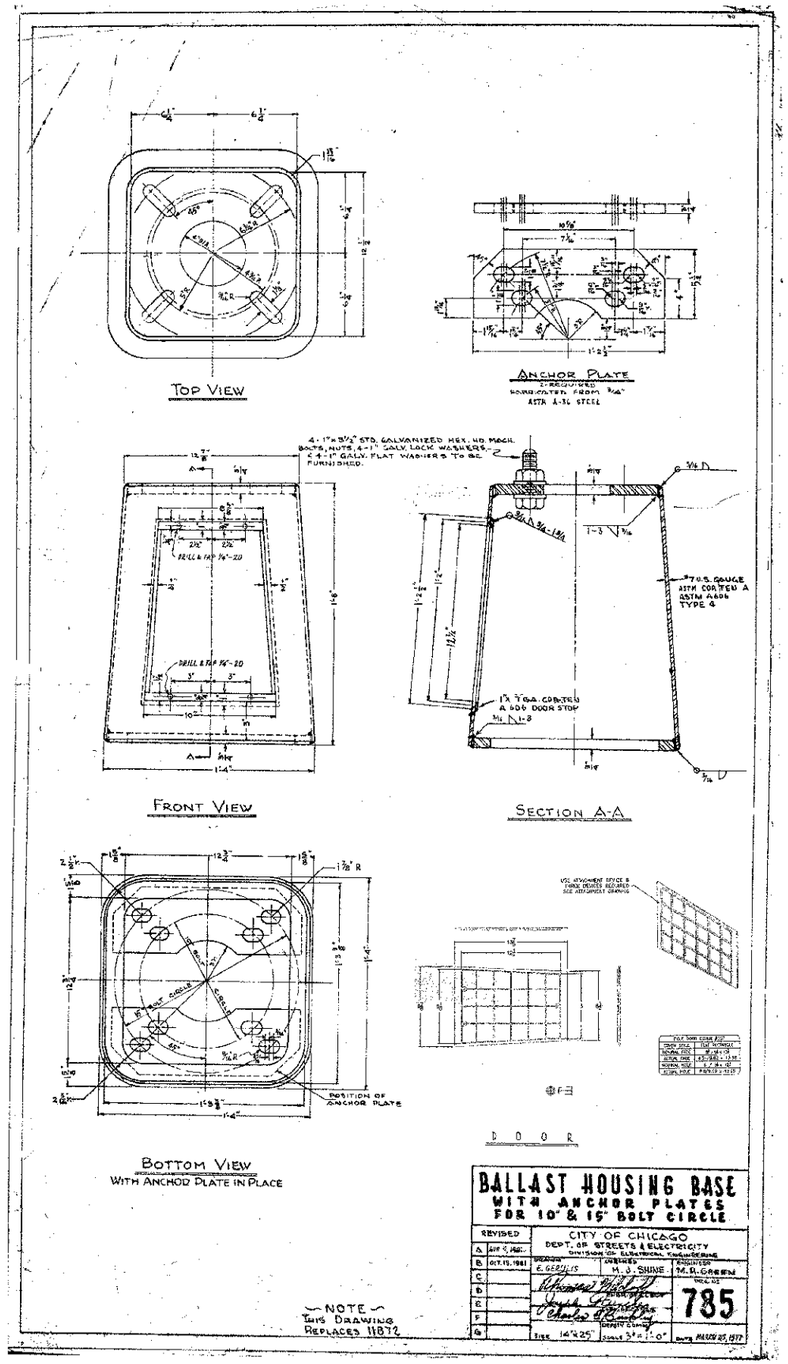

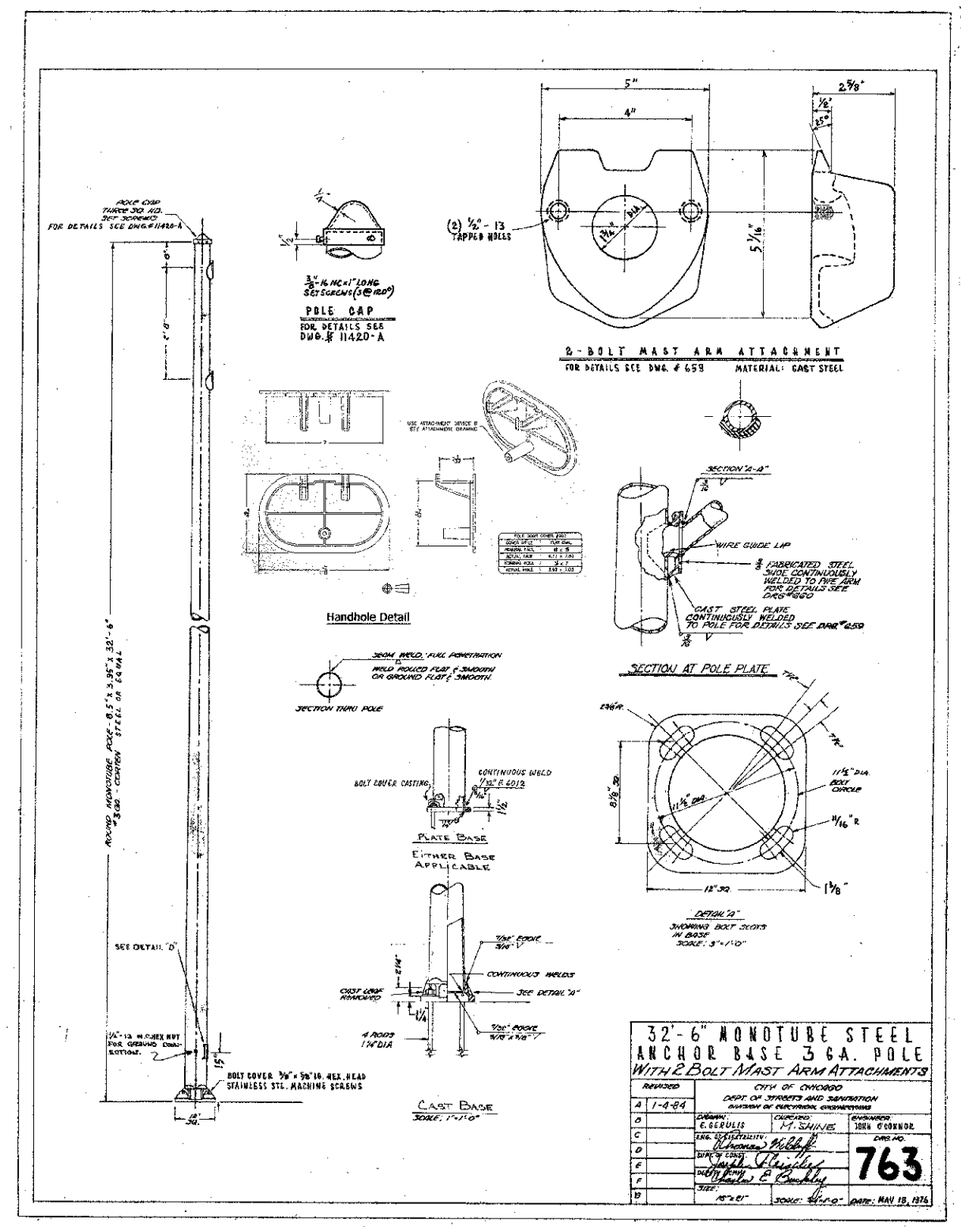

FILE NAME =	DESIGNED -	REVISED -
...\prpln-ABC-BOE-std-89.dgn	DRAWN -	REVISED -
USER NAME = sblank	CHECKED -	REVISED -
PLOT DATE = 7/2/2012	DATE - 7/2/2012	REVISED -

benesch
engineers · scientists · planners

STATE OF ILLINOIS
DEPARTMENT OF TRANSPORTATION

BOE STANDARDS

SCALE: NTS | SHEET NO. 10 OF 12 SHEETS | STA. | TO STA.

F.A.U. RTE.	SECTION	COUNTY	TOTAL SHEETS	SHEET NO.
2865	10-B5159-00-TL	COOK	62	48

CONTRACT NO. 63715

ILLINOIS FED. AID PROJECT