PROJECT ENDS
STA 8+70

PROJECT BEGINS
STA 8+42

NOTE:
CONTRACTOR SHALL SAWCUT ALONG THE EXISTING EDGE OF PAVEMENT AND PROVIDE PROPER MEANS TO PREVENT DAMAGE TO EXISTING PAVEMENT. IF, AT THE DISCRETION OF THE ENGINEER, THE ADJACENT PAVEMENT GETS DAMAGED, THE CONTRACTOR SHALL PROVIDE AN ADDITIONAL SAWCUT AND REPAIR THE ROADWAY TO THE SATISFACTION OF THE ENGINEER. THIS WORK SHALL BE INCLUDED IN THE CURB AND GUTTER PAY ITEM.

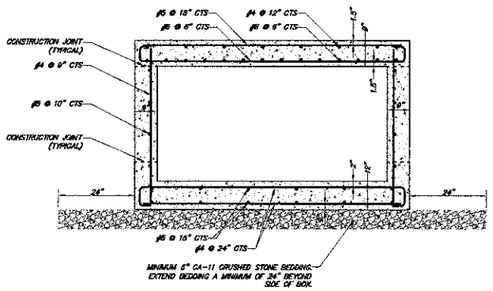

TYPICAL JUNCTION BOX SECTION

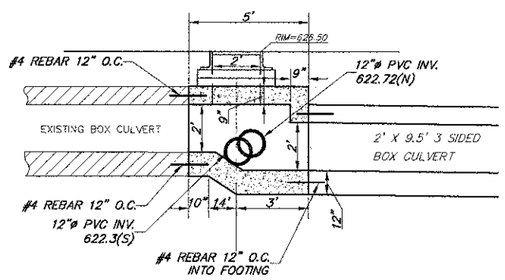

JUNCTION BOX DETAIL

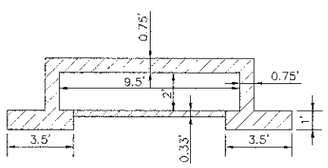

EXISTING CULVERT CROSS SECTION

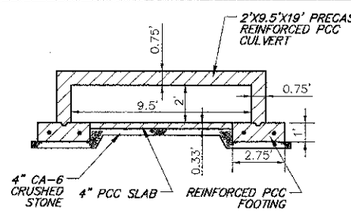

PROPOSED CULVERT CROSS SECTION

* ALL REINFORCEMENT BARS TO BE EPOXY COATED

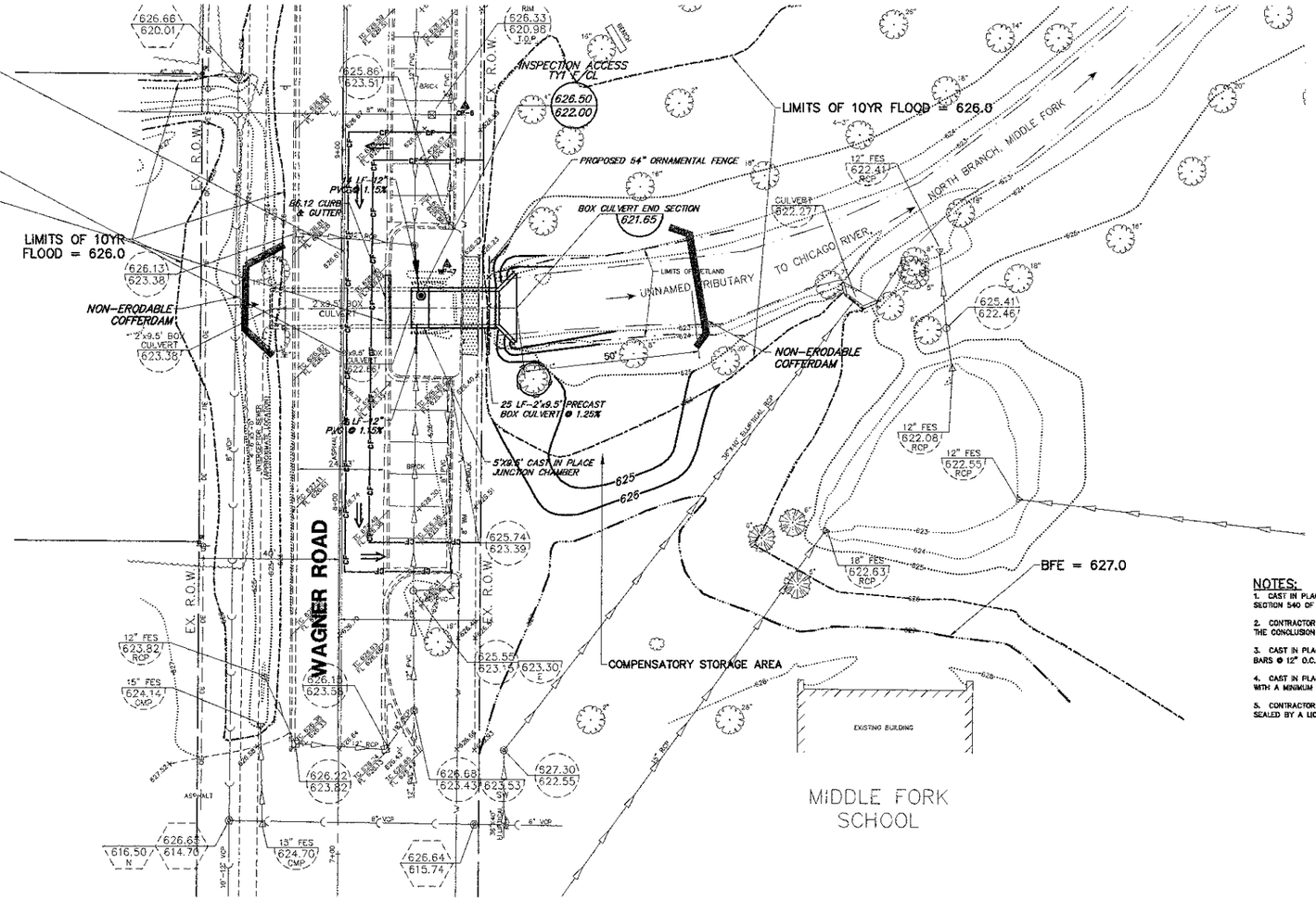

N

GRAPHIC SCALE
20 0 10 20
(IN FEET)
1 inch = 20 ft.

LEGEND

COMBINATION CONCRETE CURB AND GUTTER, TYPE B6.12

PCC SIDEWALK, 5" (SEE DETAIL)

NOTES:

1. CAST IN PLACE AND PRECAST BOX CULVERTS SHALL BE CONSTRUCTED IN ACCORDANCE WITH SECTION 540 OF THE STANDARD SPECIFICATIONS.
2. CONTRACTOR SHALL PROVIDE DETAILED AS-CONSTRUCTED DRAWINGS OF EACH JUNCTION AT THE CONCLUSION OF THE PROJECT.
3. CAST IN PLACE JUNCTION CHAMBERS SHALL BE DOWELED INTO EXISTING STRUCTURES WITH #4 BARS @ 12" O.C. BARS SHALL EXTEND A MINIMUM OF 4" INTO EXISTING CONCRETE.
4. CAST IN PLACE JUNCTION SECTIONS TO BE CONSTRUCTED USING IDOT CLASS S1 CONCRETE WITH A MINIMUM COMPRESSIVE STRENGTH OF 3500 PSI AT 14 DAYS.
5. CONTRACTOR SHALL PROVIDE SHOP DRAWINGS OF EACH JUNCTION SECTION SIGNED AND SEALED BY A LICENSED STRUCTURAL ENGINEER.

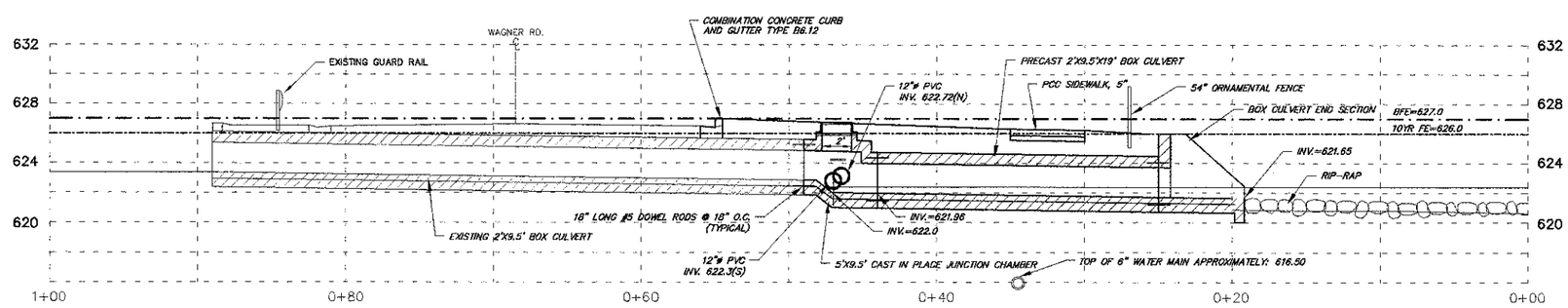

CL OF CREEK

SCALE: 1"=5'H 1"=5'V

FILE NAME = 3509.213-Wagner-PR1.dwg	USER NAME = BRIAN WESOLOWSKI	DESIGNED - BVS	REVISED - 6/29/12	SUNSET RIDGE ROAD & WAGNER ROAD SECTION 10-00050-00-SW VILLAGE OF NORTHFIELD, ILLINOIS	PLAN AND PROFILE - WAGNER ROAD CULVERT	FAU RTE.	SECTION	COUNTY	TOTAL SHEETS	SHEET NO.
		DRAWN - BVS	REVISED -			2777	10-0050-00-SW	COOK	15	4
	PLOT SCALE = 1" = .0833'	CHECKED - LJD	REVISED -					CONTRACT #: 63729		
	PLOT DATE = 4/30/2012	DATE - 4/30/12	REVISED -		SCALE 1"=20' SHEET NO. OF SHEETS STA. TO STA.			ILLINOIS FED. AID PROJECT		