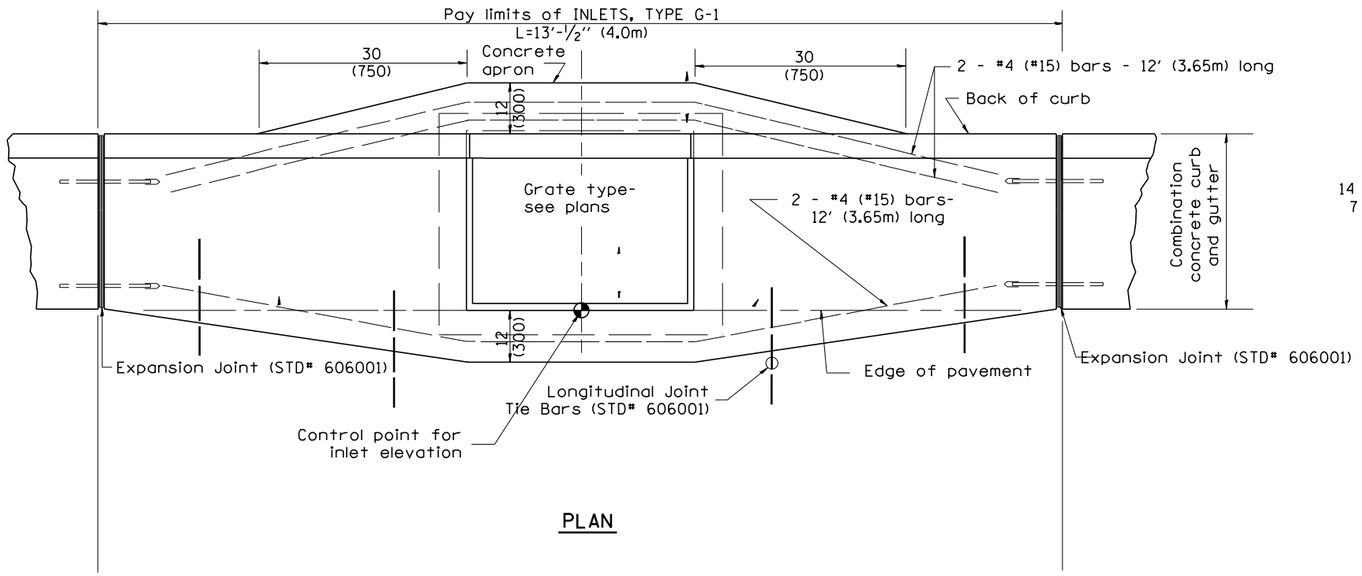

PLAN

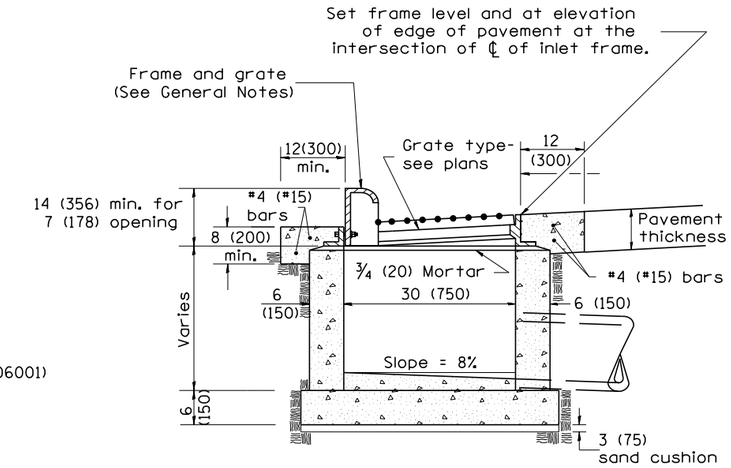

ELEVATION
SIDE

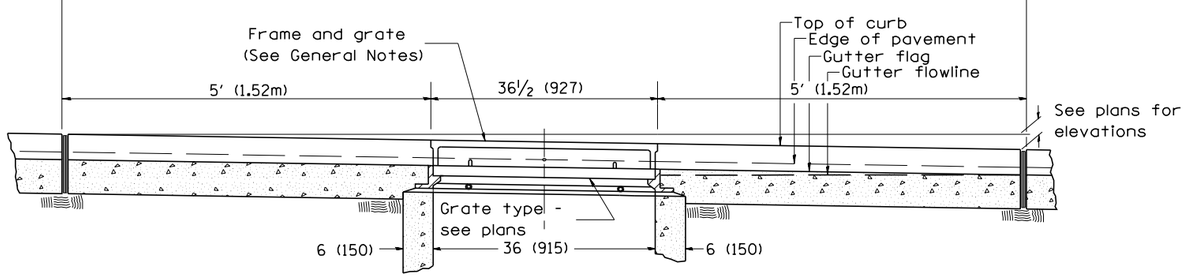

ELEVATION
FRONT

GENERAL NOTES

1. Inlet construction shall be in accordance with Section 602 of the Standard Specifications.
2. Combination Concrete Curb & Gutter shall be constructed in accordance with Section 606 of the Standard Specifications.
3. See District CADD Standard 604001-D4 for frame and grates.

DESIGNER NOTES:

1. Include State Standard 606001 for combination concrete curb and gutter details.
2. Include State Standard 420001 for pavement joints.
3. Include District CADD Standard for frame and grates and specify grate type in plans.
4. Include District Special Provision. Pay item includes transitional c.c.c &g., inlet and frame and grate. All work within pay limits.
5. The designer should include pavement removal quantities when the apron requires pavement removal.

All dimensions are in inches (millimeters) unless otherwise noted.

01-01-97	RENUM. B-4.01, NEW REVISION BOX	T.P.
10-99	REVISION TO GENERAL NOTES	J.A.
02-00	REVISION TO DESIGNER NOTES	J.A.
10-16-06	REVISED TO 2007 SPEC.	M.A.

STATE OF ILLINOIS
DEPARTMENT OF TRANSPORTATION

INLETS, TYPE G-1

NOT TO SCALE

CADD STD. 602001-D4

F.A. RTE.	SECTION	COUNTY	TOTAL SHEETS	SHEET NO.
	90-(14R;(14HB-4,14,14HVB)BR)	TAZEWELL	2433	2110
		CONTRACT NO.		
FED. ROAD DIST. NO.	ILLINOIS	FED. AID PROJECT		