Bench Mark: Chiseled "□" on S.W. parapet of EB lane I-74 bridge (S.N. 090-0015), just E. of I-155. Elevation 757.24.

Existing Structures: S.N. 090-0014 (WB) and S.N. 090-0015 (EB) were originally built in 1961. Structure consists of dual 3-span continuous steel WF superstructures, skewed 36°59'00". Abutments are reinforced concrete stub abutments supported by concrete piles. The reinforced concrete multi-column piers are supported by creosoted timber piles. The existing total bridge lengths are 173'-10" back to back of abutments. The superstructure width is 35'-8" (WB) and varies from 51'-4¾" to 53'-11½" (EB).

The contractor shall remove these bridges and replace with embankment under staged construction. I-74 traffic shall be maintained with two lanes in each direction by utilizing crossovers.

No salvage.

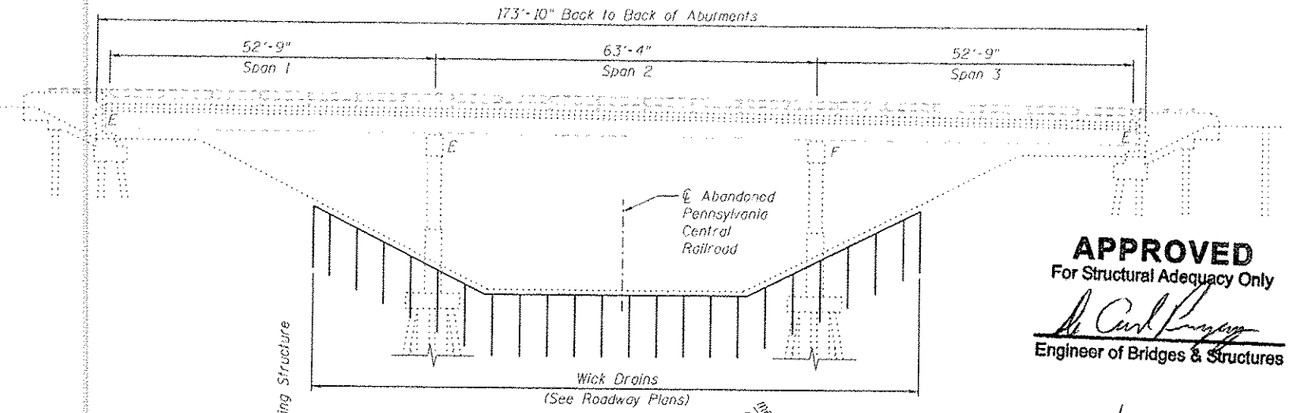

ELEVATION

APPROVED
For Structural Adequacy Only
Engineer of Bridges & Structures

DESIGN SPECIFICATIONS

2002 AASHTO Standard Specifications for Highway Bridges, 17th Edition

SCOPE OF WORK

1. Partial removal of SNs 090-0014 and 090-0015 during Stage 1 (includes temporary sheet pile installation)
2. Load reduction on existing pier foundations through removal of existing overburden material and replacement with Lightweight Cellular Concrete Fill (Class IV).
3. Installation of geotextile retaining walls and placement of temporary fill during Stage 1
4. Removal of remaining SN 090-0015 during Stage 4
5. Lower elevation of geotextile wall during stage 6
6. Removal of remaining SN 090-0014 during Stage 7

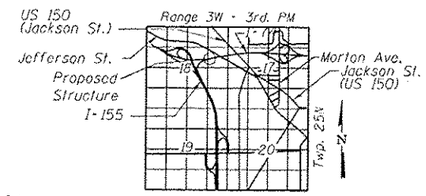

LOCATION SKETCH

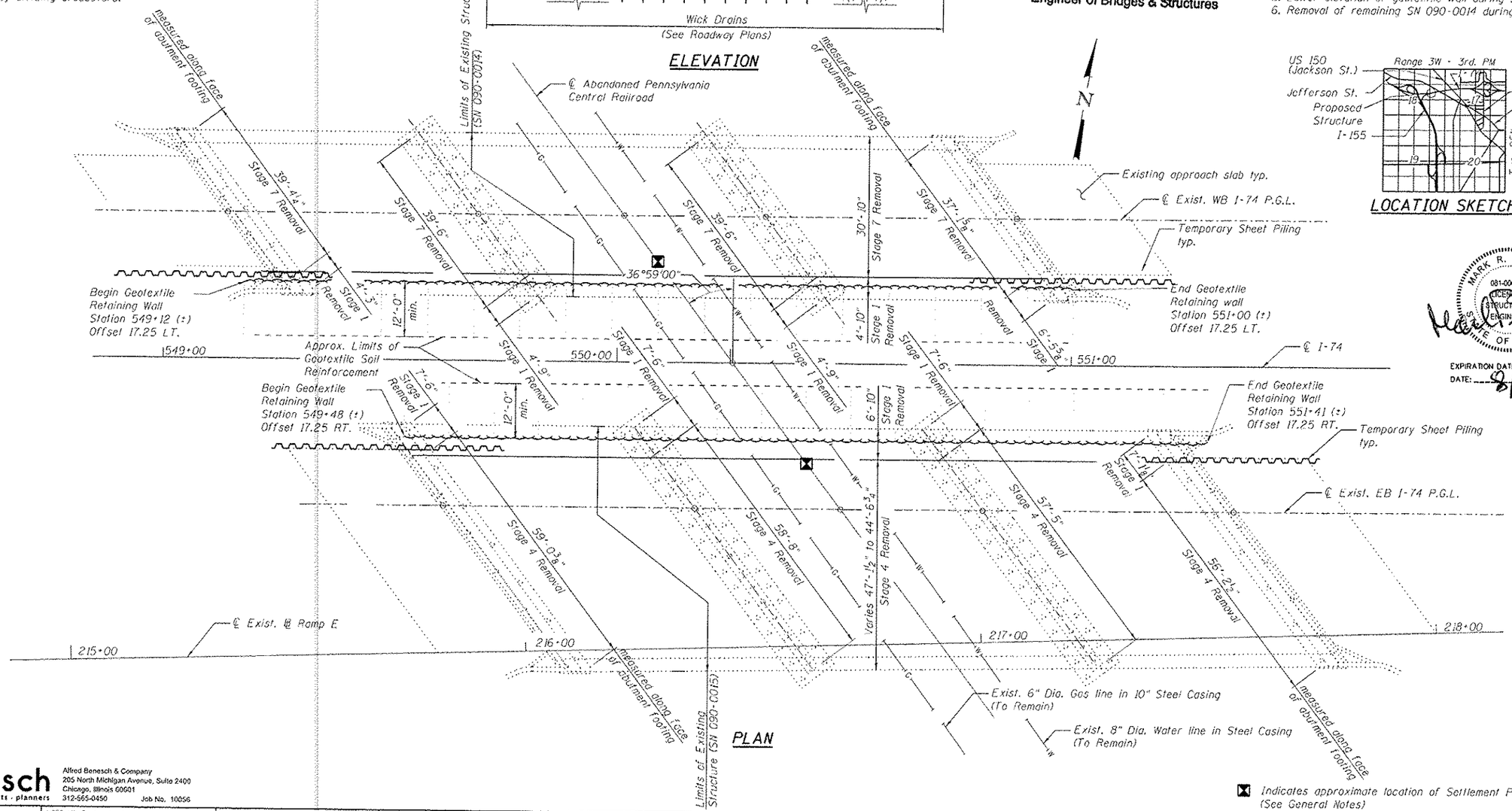

PLAN

Indicates approximate location of Settlement Platform (See General Notes)

MARK R. BENDOK
081-006516
LICENSED STRUCTURAL ENGINEER
STATE OF ILLINOIS
EXPIRATION DATE 11-30-2012
DATE: 8/17/12

benesch
engineers · scientists · planners
Alfred Benesch & Company
205 North Michigan Avenue, Suite 2400
Chicago, Illinois 60601
312-565-0450 Job No. 10056

FILE NAME = xxxxxx_68620_01_gpe.dgn	USER NAME = mbecker	DESIGNED - MFB/OTS	REVISED -
		CHECKED - MRB	REVISED -
	PLOT SCALE =	DRAWN - JLS/OTS	REVISED -
	PLOT DATE = 8/17/2012	CHECKED - MRB/KWS	REVISED -

STATE OF ILLINOIS
DEPARTMENT OF TRANSPORTATION

GENERAL PLAN AND ELEVATION
STRUCTURE NO. 090-0014 / 0015 REMOVAL
SHEET NO. SR1 OF SR22 SHEETS

F.A.I. RTE.	SECTION	COUNTY	TOTAL SHEETS	SHEET NO.
74	90-(14R,(14HB-4,14,14HVB)BR)	TAZEWELL	2433	2069
		CONTRACT NO. 68620		
		ILLINOIS FED. AID PROJECT		

X:\100009S\10056\Engineering_Documents_Phase_II\I74over RR\Final\xxxxxx_68620_01_gpe.dgn 2:51:17 PM 8/17/2012

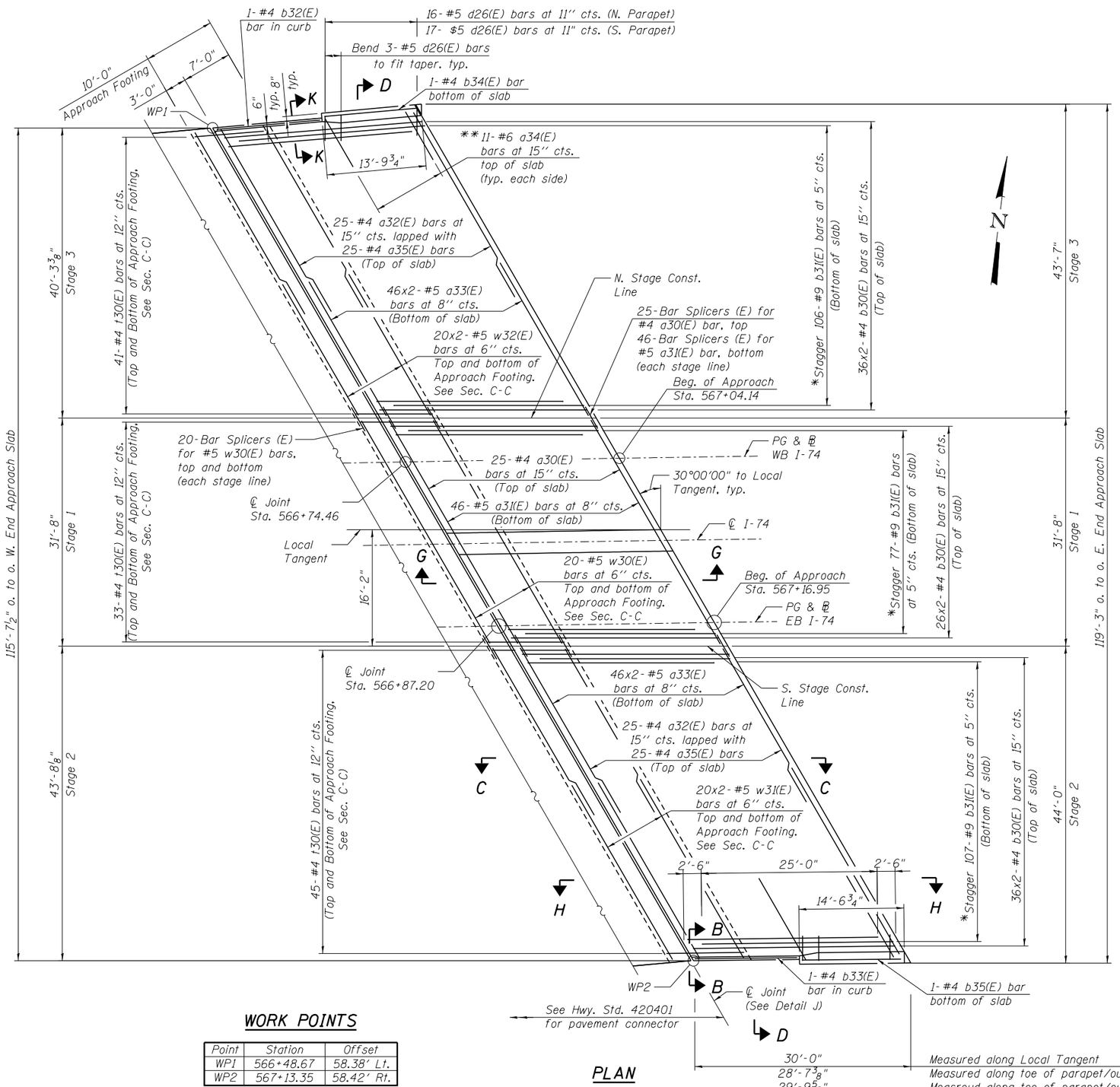

PLAN

WEST APPROACH

* Tilt #9 b31(E) bars as required to maintain clearance.
** Space between a32(E) bars, typ. each parapet.

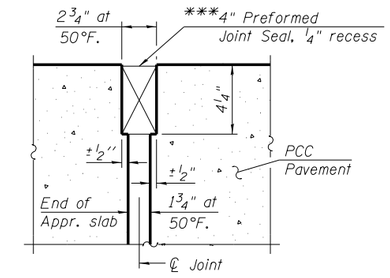

RIGID PAVEMENT

DETAIL J

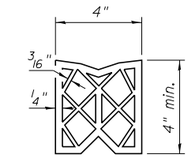

PREFORMED JOINT SEAL

*** Cost included with Concrete Superstructure

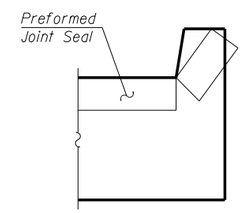

VIEW B-B

Angle Preformed Joint Seal at 45° at curbs when req'd for drainage.

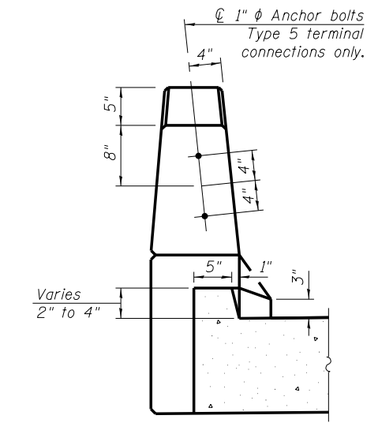

VIEW K-K

MINIMUM BAR LAP

(Approach Slab)

#4 bar = 2'-7"
#5 bar = 3'-3"

NOTES:

1. See sheet SC27 for Sections and Views shown in Plan.
2. a30(E) thru a33(E) bars are spaced along Local Tangent.
3. b30(E) and b31(E) bars are spaced perpendicular to Local Tangent.
4. t30(E) bars are spaced along skew of approach footing.
5. Bars indicated thus 20x2-#5 etc. indicate 20 lines of bars with 2 lengths per line.
6. Stations and offsets are measured from ℄ I-74.

WORK POINTS

Point	Station	Offset
WP1	566+48.67	58.38' Lt.
WP2	567+13.35	58.42' Rt.

benesch engineers · scientists · planners
Alfred Benesch & Company
205 North Michigan Avenue, Suite 2400
Chicago, Illinois 60601
312-565-0450 Job No. 10056

FILE NAME = 0900169_68620_25_apslb1.dgn	USER NAME = mbecker	DESIGNED - MFB	REVISED -
		CHECKED - AAY/MRB	REVISED -
	PLOT SCALE =	DRAWN - PRT	REVISED -
	PLOT DATE = 7/16/2012	CHECKED - AAY	REVISED -

STATE OF ILLINOIS
DEPARTMENT OF TRANSPORTATION

BRIDGE APPROACH SLAB DETAILS 1 OF 3
STRUCTURE NO. 090-0169
SHEET NO. SC25 OF SC63 SHEETS

F.A.I. RTE.	SECTION	COUNTY	TOTAL SHEETS	SHEET NO.
74	90-(14R;(14HB-4,14,14HVB)BR)	TAZEWELL	2433	2001
		CONTRACT NO. 68620		
		ILLINOIS FED. AID PROJECT		

x:\10000s\10056\engineering_documents_phase_ii\174over_Jackson\Final\0900169_68620_25_apslb1.dgn 11:19:29 AM 7/16/2012

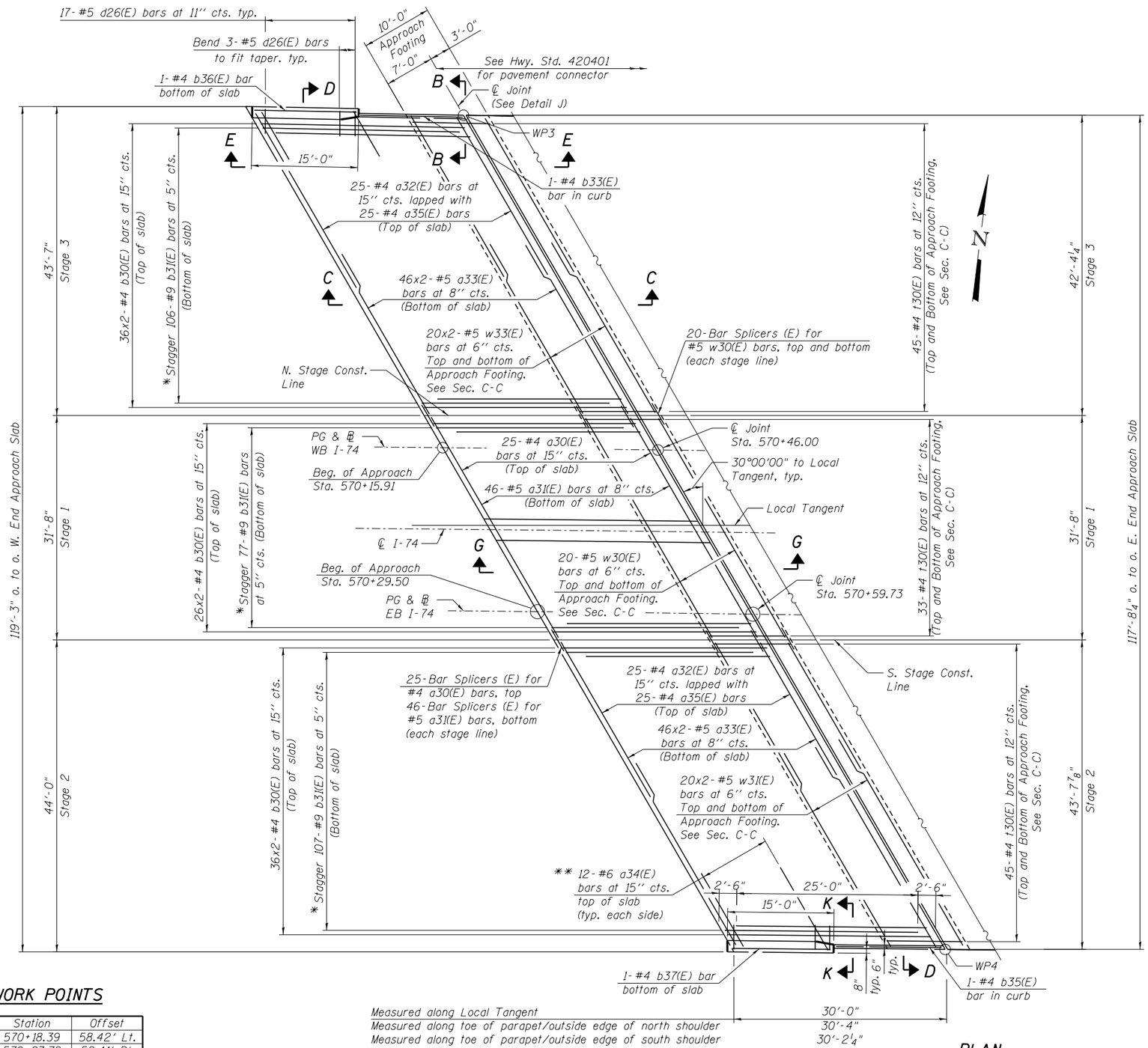

PLAN

EAST APPROACH

* Tilt #9 b31(E) bars as required to maintain clearance.
** Space between a32(E) bars, typ. each parapet.

MINIMUM BAR LAP

(Approach Slab)

#4 bar = 2'-7"
#5 bar = 3'-3"

WORK POINTS

Point	Station	Offset
WP3	570+18.39	58.42' Lt.
WP4	570+87.78	58.41' Rt.

NOTES:

1. See sheet SC27 for Sections and Views shown in Plan.
2. a30(E) thru a33(E) bars are spaced along Local Tangent.
3. b30(E) and b31(E) bars are spaced perpendicular to Local Tangent.
4. t30(E) bars are spaced along skew of approach footing.
5. Bars indicated thus 20x2-#5 etc. indicate 20 lines of bars with 2 lengths per line.
6. Stations and offsets are measured from ℄ I-74.
7. See sheet SC25 for View B-B, Detail J and View K-K.

benesch engineers · scientists · planners
Alfred Benesch & Company
205 North Michigan Avenue, Suite 2400
Chicago, Illinois 60601
312-565-0450 Job No. 10056

FILE NAME = 0900169_68620_26_apslb2.dgn	USER NAME = mbecker	DESIGNED - MFB	REVISED -
		CHECKED - AAY/MRB	REVISED -
	PLOT SCALE =	DRAWN - PRT	REVISED -
	PLOT DATE = 7/16/2012	CHECKED - AAY	REVISED -

STATE OF ILLINOIS
DEPARTMENT OF TRANSPORTATION

BRIDGE APPROACH SLAB DETAILS 2 OF 3
STRUCTURE NO. 090-0169

SHEET NO. SC26 OF SC63 SHEETS

F.A.I. RTE.	SECTION	COUNTY	TOTAL SHEETS	SHEET NO.
74	90-[14R;(14HB-4,14,14HVB)BR]	TAZEWELL	2433	2002
		CONTRACT NO. 68620		
		ILLINOIS FED. AID PROJECT		

x:\10000s\10056\engineering_documents_phase_ii\174over_Jackson\Final\0900169_68620_26_apslb2.dgn 11:19:30 AM 7/16/2012

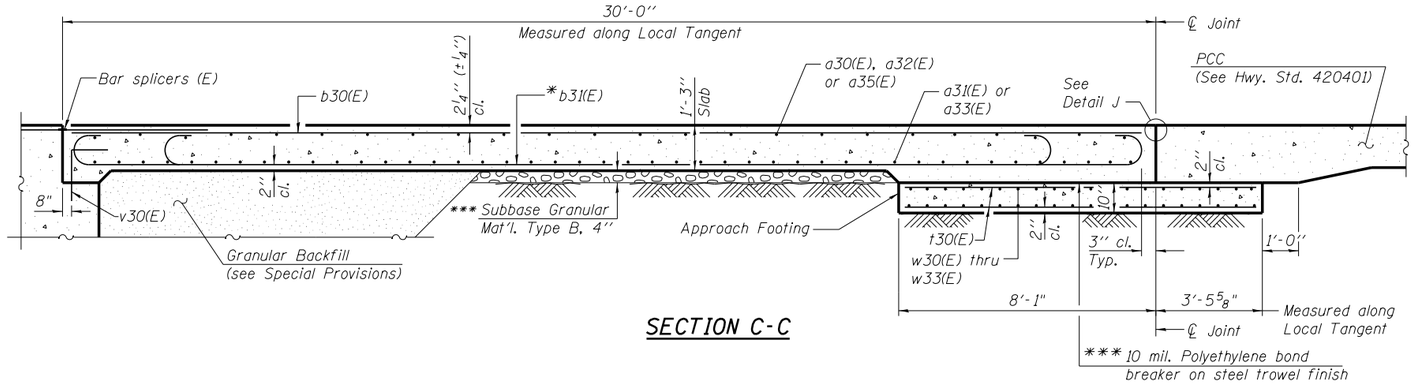

SECTION C-C

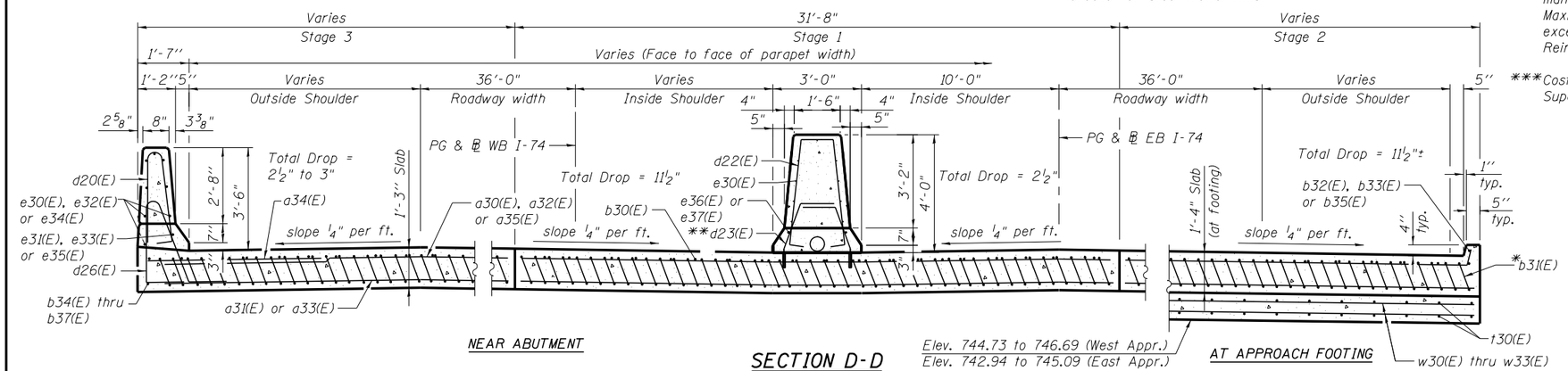

NEAR ABUTMENT

SECTION D-D

(See Plan for dimensions not shown)

Elev. 744.73 to 746.69 (West Appr.)
Elev. 742.94 to 745.09 (East Appr.)

AT APPROACH FOOTING

NOTES:

1. See sheet SC25 for View B-B, Detail J and View K-K.
2. Approach slab and parapet concrete shall be paid for as Concrete Superstructure.
3. Approach footing concrete shall be paid for as Concrete Structures.
4. Reinforcement shall be paid for as Reinforcement Bars, Epoxy Coated.
5. For d20(E), d22(E), d23(E) and v30(E) bar details, see sheet SC21.
6. The approach footing maximum applied service bearing pressure (Qmax) = 2.0 ksf.
7. For bar splicer details, see sheet SC44.
8. Cost of excavation for approach footing included with Concrete Structures.
9. For Granular Backfill and drainage treatment details, see sheet SC3.
10. For additional parapet and median barrier details, see sheets SC21 and SC22.

*Tilt #9 b31(E) bars as required to maintain clearance.

**Core and set #5 d23(E) bars according to Article 509.06 of the Standard Specifications. Cored holes shall be roughened or scored per manufacturer's recommendations. Maximum depth of hole shall not exceed 6". Cost to be included in Reinforcement Bars, Epoxy Coated.

***Cost included with Concrete Superstructure.

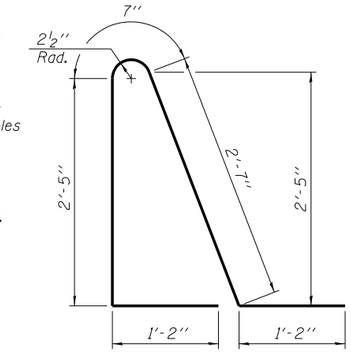

BAR d26(E)

TWO APPROACHES BILL OF MATERIAL

Bar	No.	Size	Length	Shape
a30(E)	50	#4	36'-3"	
a31(E)	92	#5	36'-3"	
a32(E)	100	#4	27'-2"	
a33(E)	368	#5	27'-0"	
a34(E)	46	#6	6'-6"	
a35(E)	100	#4	26'-9"	
b30(E)	392	#4	16'-6"	
b31(E)	580	#9	30'-3"	
b32(E)	1	#4	14'-8"	
b33(E)	2	#4	14'-5"	
b34(E)	1	#4	12'-8"	
b35(E)	2	#4	15'-0"	
b36(E)	1	#4	15'-7"	
b37(E)	1	#4	13'-9"	
d20(E)	67	#5	6'-10"	
d22(E)	68	#5	9'-3"	
d23(E)	136	#5	3'-5"	
d26(E)	67	#5	7'-11"	
e30(E)	52	#4	14'-8"	
e31(E)	2	#8	14'-8"	
e32(E)	8	#4	14'-3"	
e33(E)	1	#8	14'-3"	
e34(E)	8	#4	13'-6"	
e35(E)	1	#8	13'-6"	
e36(E)	2	#8	29'-8"	
e37(E)	2	#8	29'-4"	
t30(E)	484	#4	11'-3"	
w30(E)	80	#5	36'-3"	
w31(E)	160	#5	26'-9"	
w32(E)	80	#5	24'-9"	
w33(E)	80	#5	26'-0"	
Concrete Superstructure			Cu. Yd.	360.5
Concrete Structures			Cu. Yd.	83.3
Reinforcement Bars, Epoxy Coated			Pound	77,920

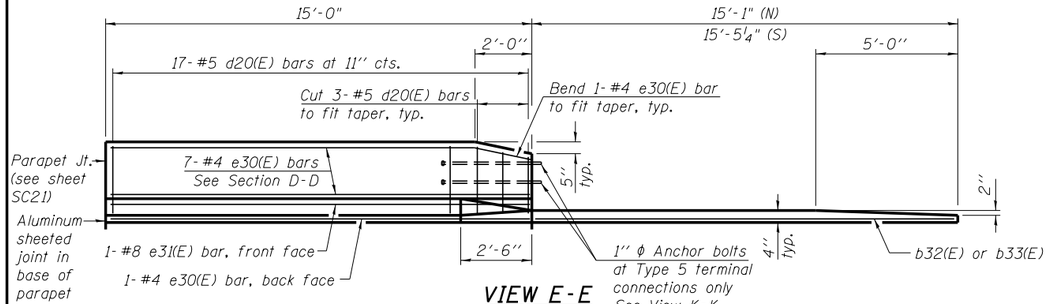

VIEW E-E

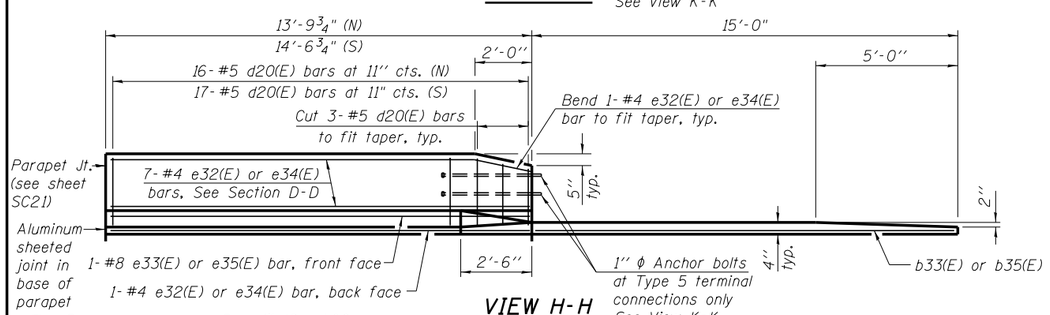

VIEW H-H

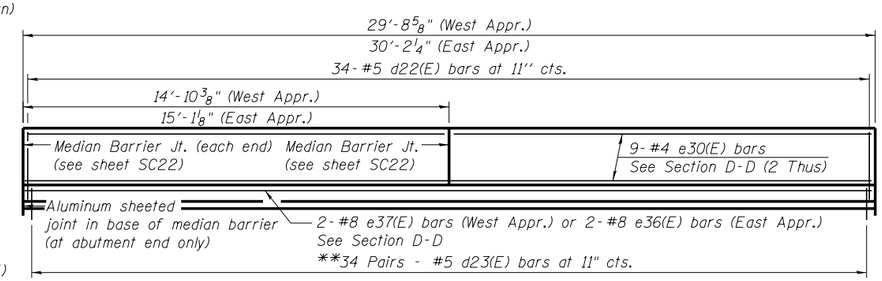

VIEW G-G

BAR a32(E)

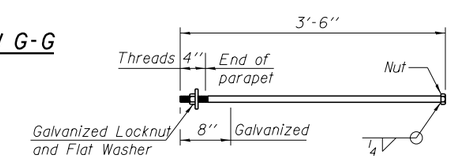

1"ϕ ANCHOR BOLT

(Cost included with Concrete Superstructure)

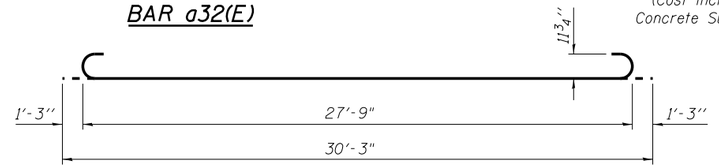

BAR b31(E)

benesch engineers · scientists · planners

Alfred Benesch & Company
205 North Michigan Avenue, Suite 2400
Chicago, Illinois 60601
312-565-0450 Job No. 10056

FILE NAME = 0900169_68620_27_apslb3.dgn	USER NAME = mbecker	DESIGNED - MFB	REVISED -
		CHECKED - AAY/MRB	REVISED -
	PLOT SCALE =	DRAWN - PRT	REVISED -
	PLOT DATE = 7/16/2012	CHECKED - AAY	REVISED -

STATE OF ILLINOIS
DEPARTMENT OF TRANSPORTATION

BRIDGE APPROACH SLAB DETAILS 3 OF 3
STRUCTURE NO. 090-0169
SHEET NO. SC27 OF SC63 SHEETS

F.A.I. RTE.	SECTION	COUNTY	TOTAL SHEETS	SHEET NO.
74	90-(14R;(14HB-4,14,14HVB)BR)	TAZEWELL	2433	2003
		CONTRACT NO. 68620		
		ILLINOIS FED. AID PROJECT		

x:\10000s\10056\engineering_documents_phase_ii\174over_Jackson\Final\0900169_68620_27_apslb3.dgn 11:19:31 AM 7/16/2012

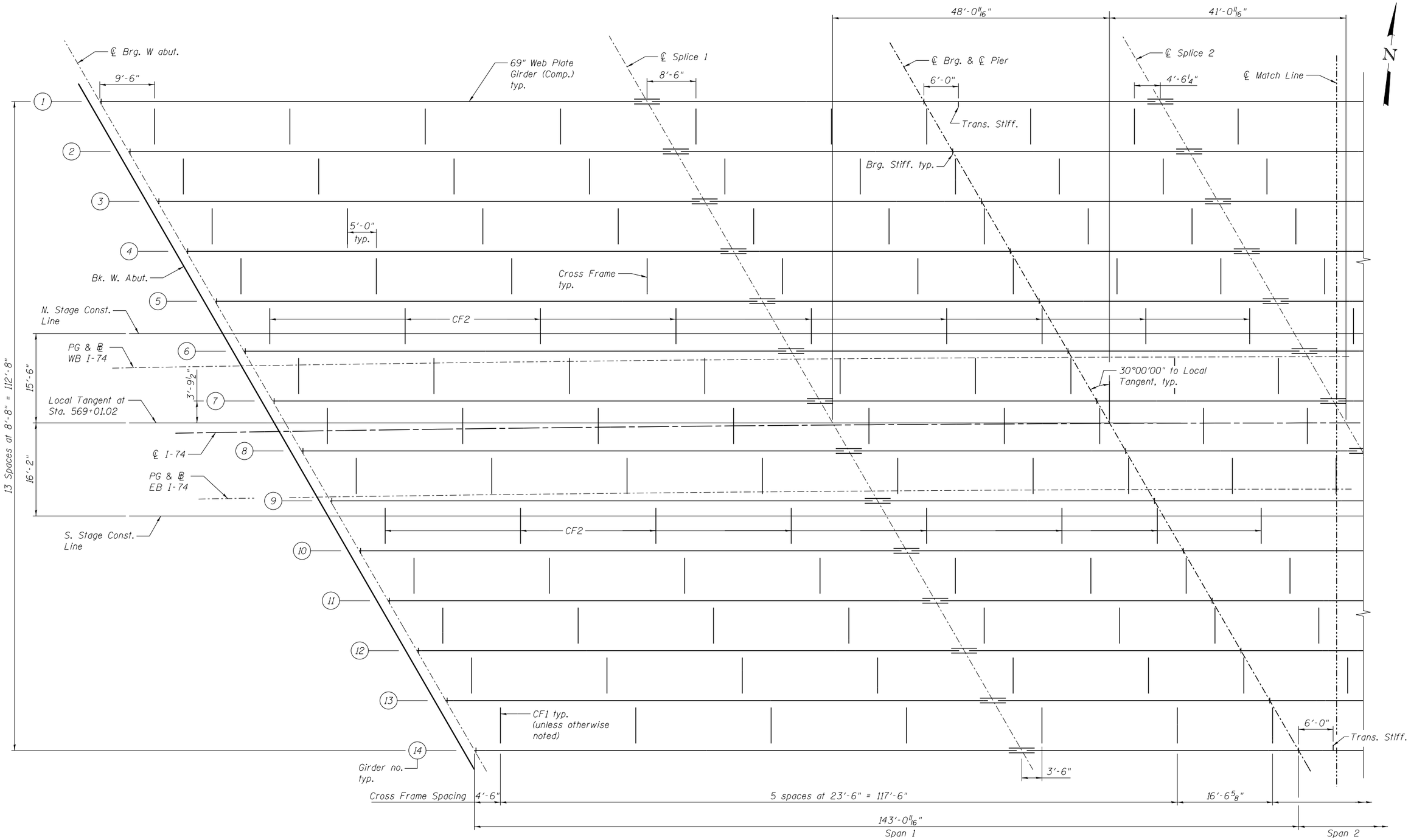

FRAMING PLAN

NOTE:

All longitudinal dimensions are measured along the Local Tangent.

benesch
engineers · scientists · planners

Alfred Benesch & Company
205 North Michigan Avenue, Suite 2400
Chicago, Illinois 60601
312-565-0450 Job No. 10056

FILE NAME = 0900169_68620_28_frmpll.dgn	USER NAME = mbecker	DESIGNED - MFB/JLS/DTS	REVISED -
		CHECKED - MRB	REVISED -
	PLOT SCALE =	DRAWN - PRT	REVISED -
	PLOT DATE = 7/16/2012	CHECKED - MRB	REVISED -

STATE OF ILLINOIS
DEPARTMENT OF TRANSPORTATION

FRAMING PLAN 1 OF 2
STRUCTURE NO. 090-0169
SHEET NO. SC28 OF SC63 SHEETS

F.A.I. RTE.	SECTION	COUNTY	TOTAL SHEETS	SHEET NO.
74	90-(14R;(14HB-4,14,14HVB)BR)	TAZEWELL	2433	2004
		CONTRACT NO. 68620		
	ILLINOIS FED. AID PROJECT			

x:\10000s\10056\engineering_documents_phase_ii\174over_Jackson\Final\0900169_68620_28_frmpll.dgn 11:19:32 AM 7/16/2012

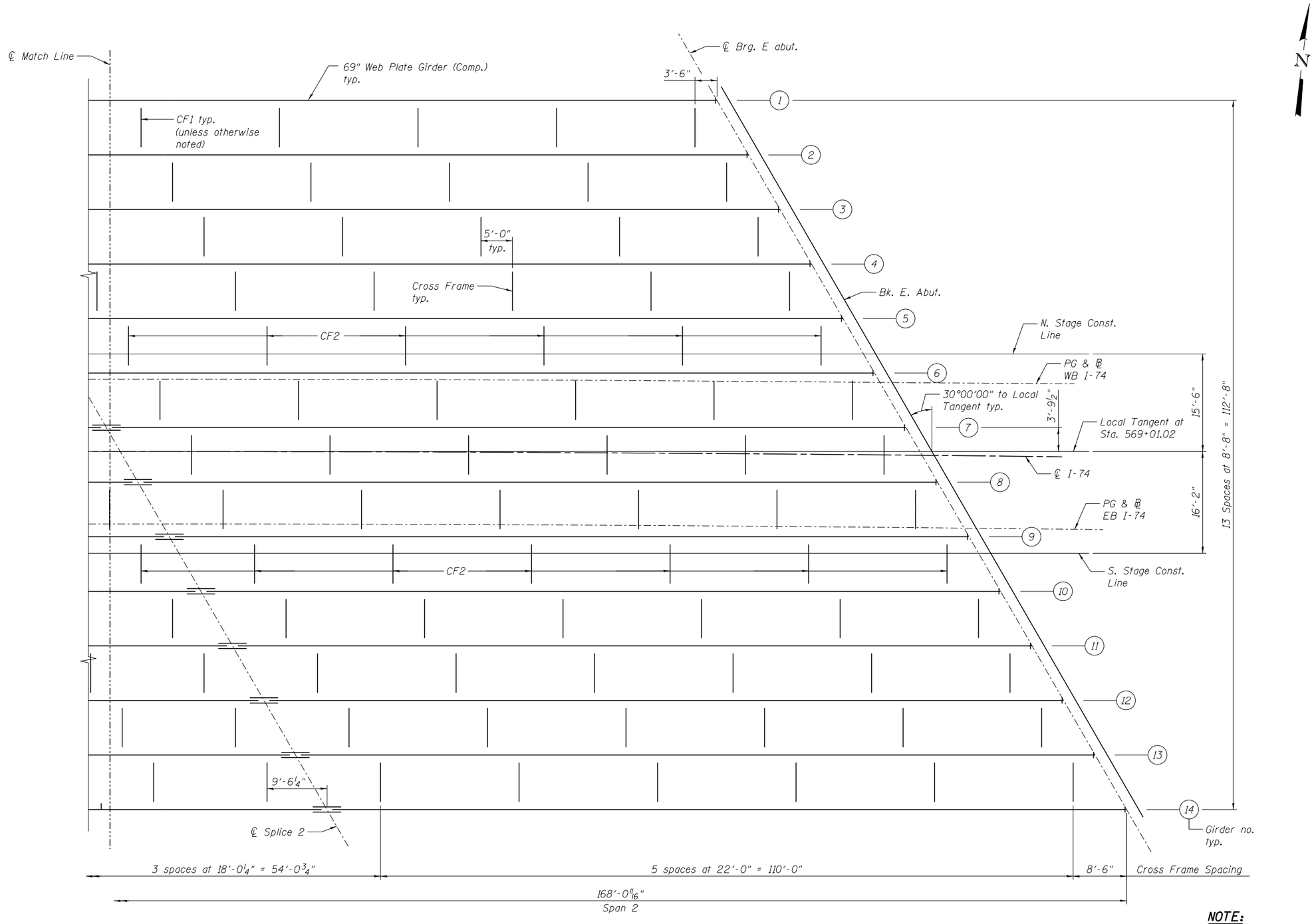

benesch
engineers · scientists · planners

Alfred Benesch & Company
205 North Michigan Avenue, Suite 2400
Chicago, Illinois 60601
312-565-0450 Job No. 10056

FRAMING PLAN

NOTE:
All longitudinal dimensions are measured along the Local Tangent.

FILE NAME = 0900169_68620_29_frmpl2.dgn	USER NAME = mbecker	DESIGNED - MFB/JLS/DTS	REVISED -
		CHECKED - MRB	REVISED -
	PLOT SCALE =	DRAWN - PRT	REVISED -
	PLOT DATE = 7/16/2012	CHECKED - MRB	REVISED -

STATE OF ILLINOIS
DEPARTMENT OF TRANSPORTATION

FRAMING PLAN 2 OF 2
STRUCTURE NO. 090-0169
SHEET NO. SC29 OF SC63 SHEETS

F.A.I. RTE.	SECTION	COUNTY	TOTAL SHEETS	SHEET NO.
74	90-(14R;(14HB-4,14,14HVB)BR)	TAZEWELL	2433	2005
		CONTRACT NO. 68620		
	ILLINOIS FED. AID PROJECT			

x:\10000s\10056\engineering_documents_phase_ii\174over_Jackson\Final\0900169_68620_29_frmpl2.dgn 11:19:33 AM 7/16/2012

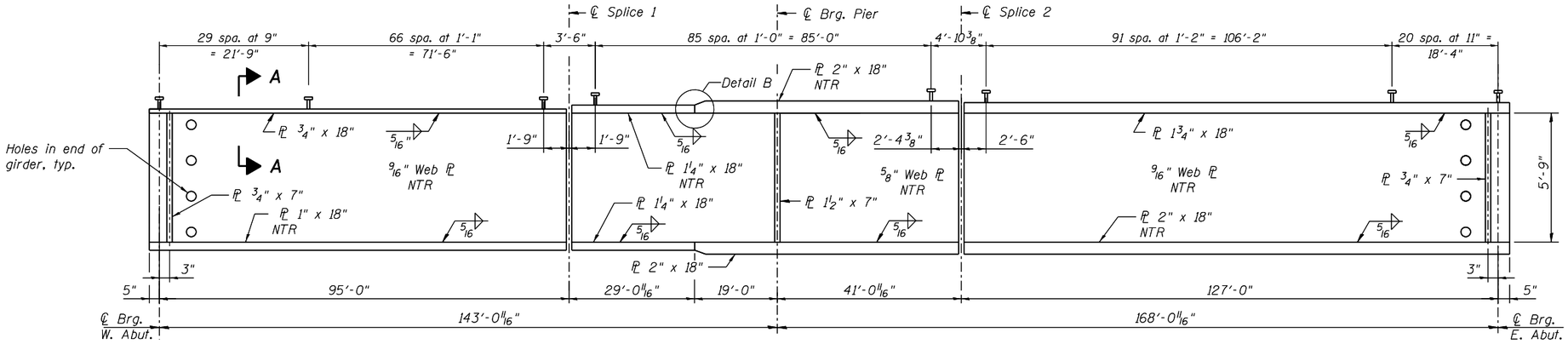

GIRDER ELEVATION

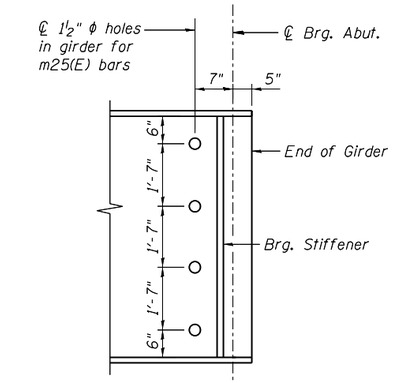

END OF GIRDER ELEVATION

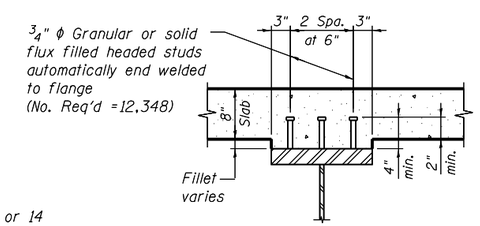

SECTION A-A

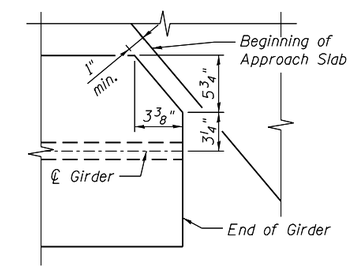

END OF GIRDER COPING DETAIL

(Top Flange only)

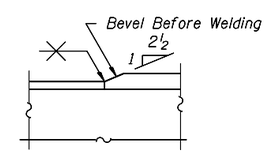

DETAIL B

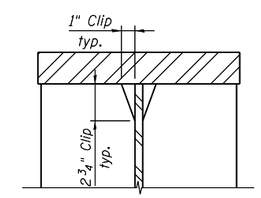

DETAIL C

(Typical top & bottom flanges)

* Terminate weld 1/4" from outside edges of PLs

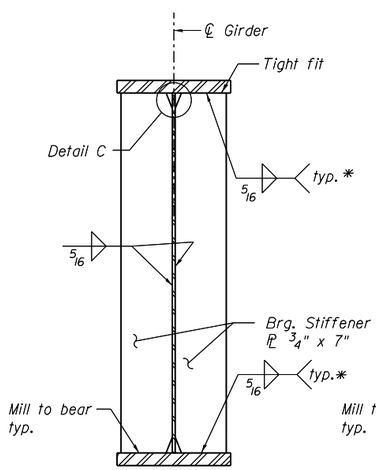

BEARING STIFFENER AT ABUTMENT

(No. plates required = 56)

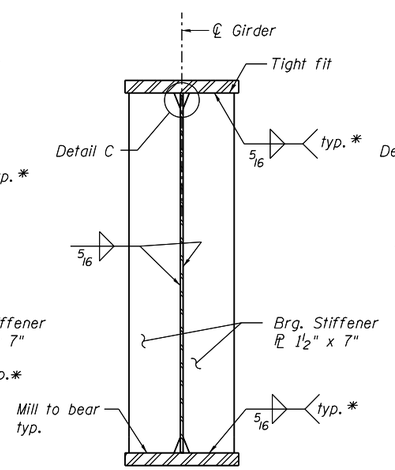

BEARING STIFFENER AT PIER

(No. plates required = 28)

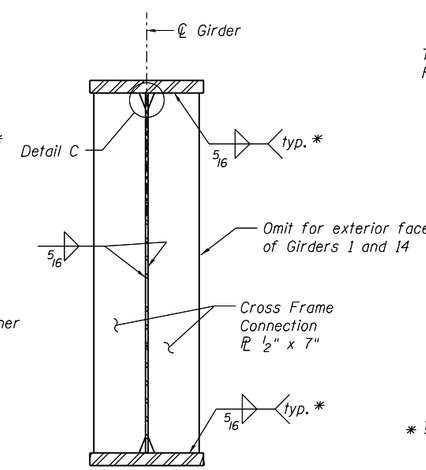

CONNECTION PLATE

(No. plates required = 377)

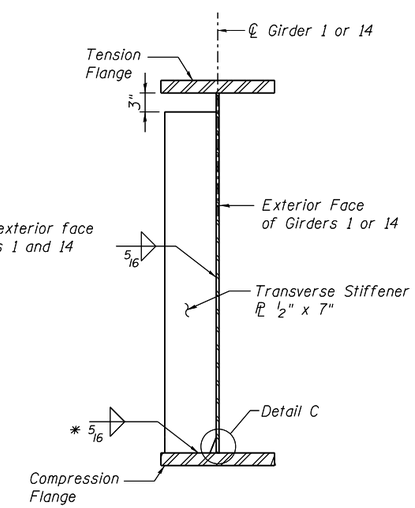

TRANSVERSE STIFFENER

(No. plates required = 2)

NOTES:

1. All Girder webs and flanges shall be AASHTO M270 Grade 50 steel.
2. "NTR" denotes plates to which notch toughness requirements are applicable.
3. Load carrying components designated "NTR" shall conform to the Impact Testing Requirements, Zone 2.

benesch engineers · scientists · planners
Alfred Benesch & Company
205 North Michigan Avenue, Suite 2400
Chicago, Illinois 60601
312-565-0450 Job No. 10056

FILE NAME = 0900169_68620_30_stdtl.dgn	USER NAME = mbecker	DESIGNED - JLS/DTS	REVISED -
		CHECKED - MRB	REVISED -
	PLOT SCALE =	DRAWN - PRT	REVISED -
	PLOT DATE = 7/16/2012	CHECKED - MRB	REVISED -

STATE OF ILLINOIS
DEPARTMENT OF TRANSPORTATION

GIRDER DETAILS 1 OF 4
STRUCTURE NO. 090-0169
SHEET NO. SC30 OF SC63 SHEETS

F.A.I. RTE.	SECTION	COUNTY	TOTAL SHEETS	SHEET NO.
74	90-[14R;(14HB-4,14,14HVB)BR]	TAZEWELL	2433	2006
		CONTRACT NO. 68620		
		ILLINOIS FED. AID PROJECT		

x:\10000s\10056\engineering_documents_phase_ii\174overJackson\Final\0900169_68620_30_stdtl.dgn 11:19:34 AM 7/16/2012

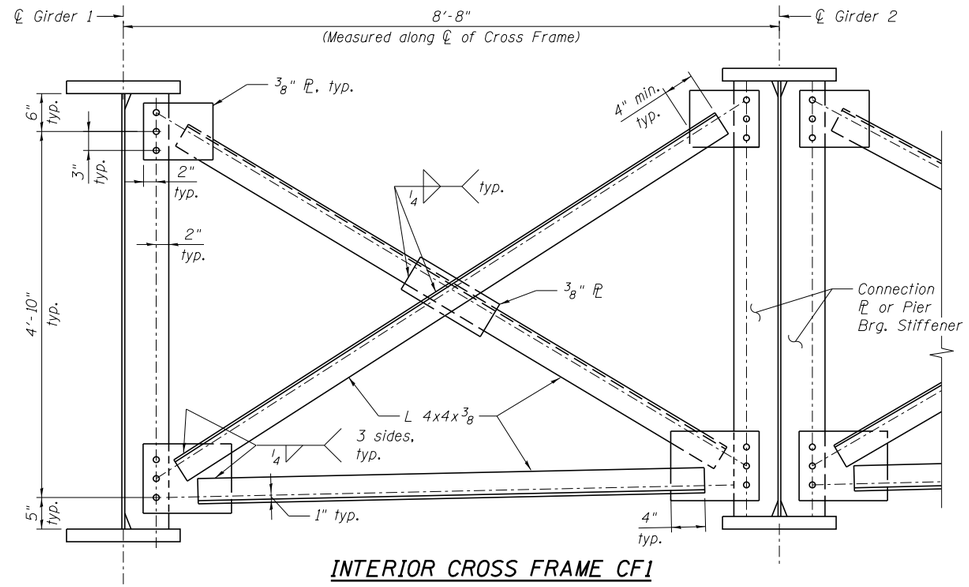

INTERIOR CROSS FRAME CF1

(No. cross frames required = 165)

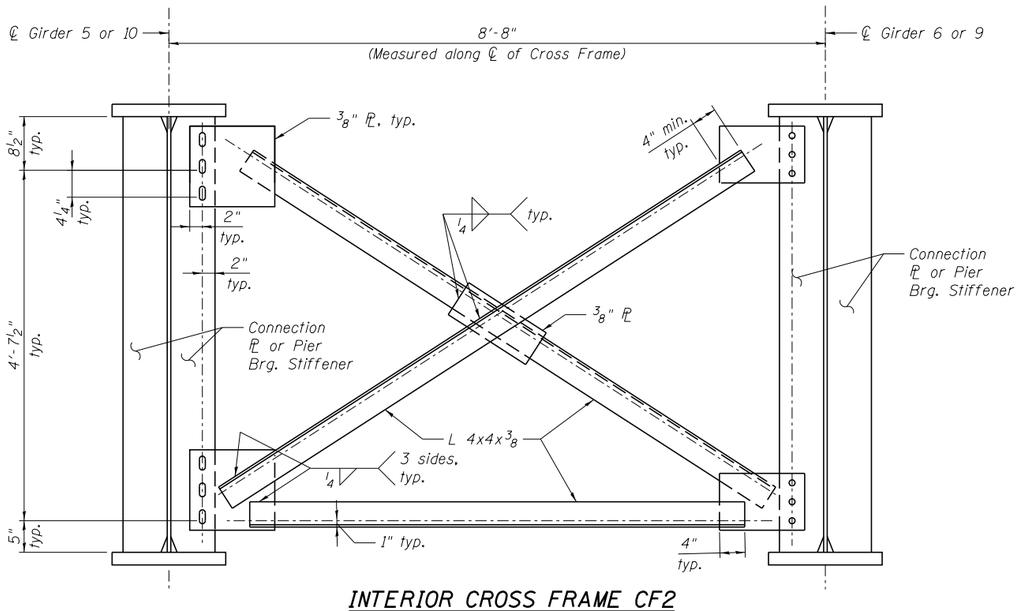

INTERIOR CROSS FRAME CF2

(No. cross frames required = 30)

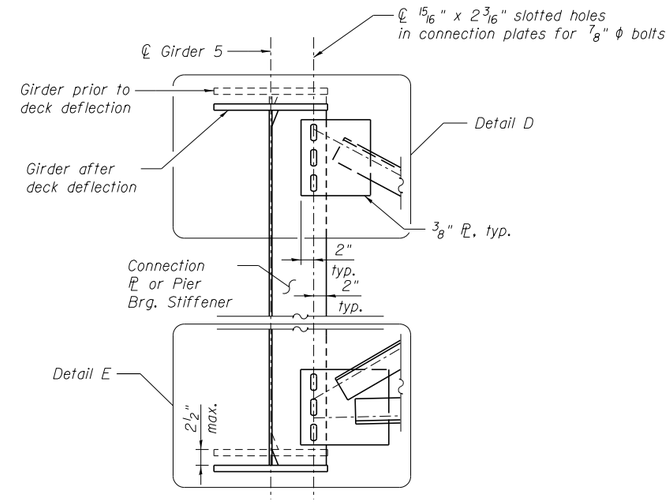

CROSS FRAME CF2 DETAIL AT STAGE CONSTRUCTION

(Girders 5 shown looking upstation, Girder 10 opposite hand)
(Detail shown at maximum deflection location)

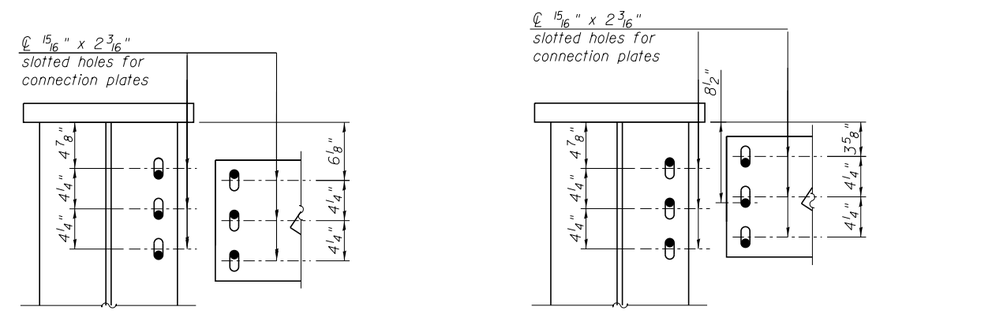

DETAIL D

(Connection plates shown disconnected for clarity)

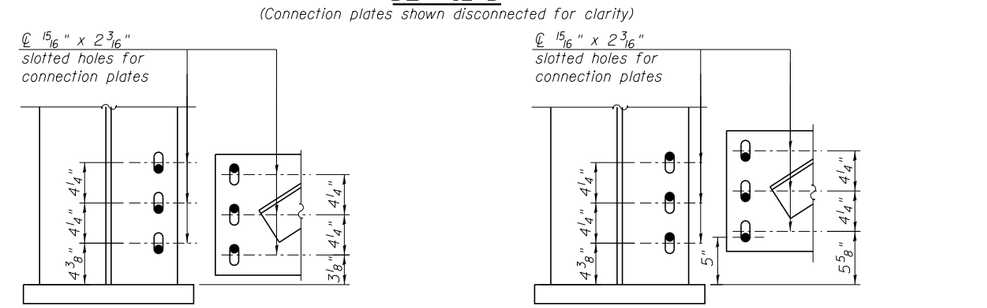

DETAIL E

(Connection plates shown disconnected for clarity)

NOTES:

1. All cross frames shall be installed as steel is erected and secured with erection pins and bolts except as otherwise noted. Individual cross frames at supports may be temporarily disconnected to install bearing anchor rods.
2. Two hardened washers required for each set of oversized holes.
3. Bolts in slots shall be finger tight until the second stage pour is complete. Position slots so bolts start at one end with no concrete load and fish near the opposite end under deck load.

benesch engineers · scientists · planners
Alfred Benesch & Company
205 North Michigan Avenue, Suite 2400
Chicago, Illinois 60601
312-565-0450 Job No. 10056

FILE NAME = 0900169_68620_31_stdt2.dgn	USER NAME = mbecker	DESIGNED - JLS/DTS	REVISED -
		CHECKED - MRB	REVISED -
	PLOT SCALE =	DRAWN - PRT	REVISED -
	PLOT DATE = 8/20/2012	CHECKED - MRB	REVISED -

STATE OF ILLINOIS
DEPARTMENT OF TRANSPORTATION

GIRDER DETAILS 2 OF 4
STRUCTURE NO. 090-0169
SHEET NO. SC31 OF SC63 SHEETS

F.A.I. RTE.	SECTION	COUNTY	TOTAL SHEETS	SHEET NO.
74	90-[14R;(14HB-4,14,14HVB)BR]	TAZEWELL	2433	2007
		CONTRACT NO. 68620		
		ILLINOIS FED. AID PROJECT		

x:\10000s\10056\engineering_documents_phase_ii\174over_Jackson\Final\0900169_68620_31_stdt2.dgn 10:13:21 AM 8/20/2012

INTERIOR GIRDER MOMENT TABLE				
		0.4 Sp. 1	Pier	0.6 Sp. 2
I_s	(in^4)	53,510	107,872	99,955
$I_c(n)$	(in^4)	122,831	192,465	186,801
$I_c(3n)$	(in^4)	90,599	147,908	141,840
$I_c(cr)$	(in^4)	-----	121,655	-----
S_s	(in^3)	1610	2955	2859
$S_c(n)$	(in^3)	2162	3529	3434
$S_c(3n)$	(in^3)	1974	3283	3198
$S_c(cr)$	(in^3)	-----	3083	-----
DC1	(k/')	1.167	1.335	1.302
M_{DC1}	('k)	1278	4081	2793
DC2	(k/')	0.157	0.157	0.157
M_{DC2}	('k)	184	504	330
DW	(k/')	0.404	0.404	0.404
M_{DW}	('k)	473	1298	850
M_{LL+IM}	('k)	2255	2779	2877
M_u (Strength I)	('k)	6483	12,542	10214
$\phi_f M_n$	('k)	10,883	13,302	17,186
f_s DC1	(ksi)	9.5	16.6	11.7
f_s DC2	(ksi)	1.1	1.8	1.2
f_s DW	(ksi)	2.9	4.7	3.2
f_s (LL+IM)	(ksi)	12.5	9.4	10.1
f_s (Service II)	(ksi)	29.8	35.4	29.2
$0.95R_hF_yf$	(ksi)	47.5	47.5	47.5
f_s (Total)(Strength I)	(ksi)	-----	-----	-----
$\phi_f F_n$	(ksi)	-----	-----	-----
V_f	(k)	72.8	66.9	75.7

INTERIOR GIRDER REACTION TABLE				
		W. Abut.	Pier	E. Abut.
R_{DC1}	(k)	87.6	251.7	117.2
R_{DC2}	(k)	7.7	31.0	10.2
R_{DW}	(k)	19.8	79.6	26.2
R_{LL+IM}	(k)	121.9	233.2	131.0
R_{Total}	(k)	237.0	595.5	284.6

All reactions are unfactored.
Reactions at abutments include weight of diaphragm

I_s, S_s: Non-composite moment of inertia and section modulus of the steel section used for computing f_s (Total-Strength I, and Service II) due to non-composite dead loads ($in.^4$ and $in.^3$).

$I_c(n)$, $S_c(n)$: Composite moment of inertia and section modulus of the steel and deck based upon the modular ratio, "n", used for computing f_s (Total-Strength I, and Service II) in uncracked sections, due to short-term composite live loads ($in.^4$ and $in.^3$).

$I_c(3n)$, $S_c(3n)$: Composite moment of inertia and section modulus of the steel and deck based upon 3 times the modular ratio, "3n", used for computing f_s (Total-Strength I, and Service II) in uncracked sections, due to long-term composite (superimposed) dead loads ($in.^4$ and $in.^3$).

$I_c(cr)$, $S_c(cr)$: Composite moment of inertia and section modulus of the steel and longitudinal deck reinforcement, used for computing f_s (Total-Strength I and Service II) in cracked sections, due to both short-term composite live loads and long-term composite dead loads ($in.^4$ and $in.^3$).

DC1: Un-factored non-composite dead load (kips/ft.).

M_{DC1}: Un-factored moment due to non-composite dead load (kip-ft.).

DC2: Un-factored long-term composite (superimposed excluding future wearing surface) dead load (kips/ft.).

M_{DC2}: Un-factored moment due to long-term composite (superimposed excluding future wearing surface) dead load (kip-ft.).

DW: Un-factored long-term composite (superimposed future wearing surface only) dead load (kips/ft.).

M_{DW}: Un-factored moment due to long-term composite (superimposed future wearing surface only) dead load (kip-ft.).

M_{LL+IM}: Un-factored live load moment plus dynamic load allowance (impact) ((kip-ft.).

M_u (Strength I): Factored design moment (kip-ft.).
$1.25\ (M_{DC1} + M_{DC2}) + 1.5\ M_{DW} + 1.75\ M_{LL+IM}$

$\phi_f M_n$: Compact composite positive moment capacity computed according to Article 6.10.7.1 or non-slender negative moment capacity according to Article A6.1.1 or A6.1.2 (kip-ft.).

f_s DC1: Un-factored stress at edge of flange for controlling steel flange due to vertical non-composite dead loads as calculated below (ksi).
M_{DC1} / S_{nc}

f_s DC2: Un-factored stress at edge of flange for controlling steel flange due to vertical composite dead loads as calculated below (ksi).
$M_{DC2} / S_c(3n)$ or $M_{DC2} / S_c(cr)$ as applicable.

f_s DW: Un-factored stress at edge of flange for controlling steel flange due to vertical composite future wearing surface loads as calculated below (ksi).
$M_{DW} / S_c(3n)$ or $M_{DW} / S_c(cr)$ as applicable.

f_s (LL+IM): Un-factored stress at edge of flange for controlling steel flange due to vertical composite live plus impact loads as calculated below (ksi).
$M_{LL+IM} / S_c(n)$ or $M_{LL+IM} / S_c(cr)$ as applicable.

f_s (Service II): Sum of stresses as computed below (ksi).
$f_{sDC1} + f_{sDC2} + f_{sDW} + 1.3\ f_s(LL+IM)$

$0.95R_hF_yf$: Composite stress capacity for Service II loading according to Article 6.10.4.2 (ksi).

f_s (Total)(Strength I): Sum of stresses as computed below on non-compact section (ksi).
$1.25\ (f_{sDC1} + f_{sDC2}) + 1.5\ f_{sDW} + 1.75\ f_{sLL+IM}$

$\phi_f F_n$: Non-Compact composite positive or negative stress capacity for Strength I loading according to Article 6.10.7.2 (ksi).

V_f: Maximum factored shear range in composite portion of span computed according to Article 6.10.10 (at Abutments & Pier).

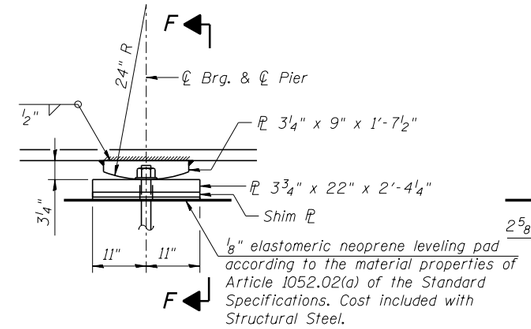

ELEVATION AT PIER

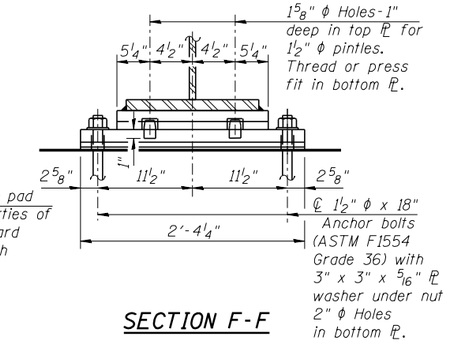

SECTION F-F

FIXED BEARING AT PIER
(Girders 3 thru 12)

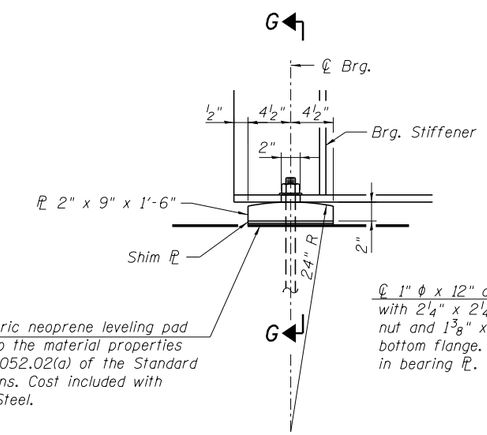

ELEVATION

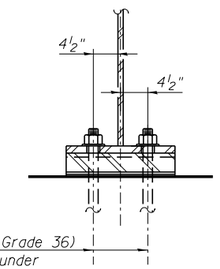

SECTION G-G

FIXED BEARING AT ABUTMENT

FILLER PLATE SCHEDULE
(In addition to adjustment shims, see General Notes)
Cost Included with Structural Steel

Abutment	Girder	Plate Thickness t
West	7	5/8"
East	7	3/8"

Fill plates to be the same horizontal dimensions as the bottom bearing plates.

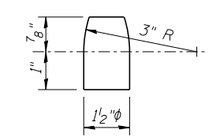

PINTLE

BILL OF MATERIAL

ITEM	UNIT	TOTAL
Anchor Bolts, 1"	Each	56
Anchor Bolts, 1 1/2"	Each	20

NOTES:

1. Anchor bolts shall be ASTM F1554 all-thread (or an Engineer-approved alternate material) of the grade(s) and diameter(s) specified.
2. Anchor bolts at fixed bearings may be either cast in place or installed in holes drilled after the supported member is in place.
3. Drilled and set anchor bolts shall be installed according to Article 521.06 of the Standard Specifications.
4. Two 1/8 in. adjusting shims shall be provided for each bearing in addition to all other plates or shims and placed as shown on bearing details.
5. Steel members required for bearing assembly shall be included in the cost of structural steel.

benesch
engineers · scientists · planners
Alfred Benesch & Company
205 North Michigan Avenue, Suite 2400
Chicago, Illinois 60601
312-565-0450 Job No. 10056

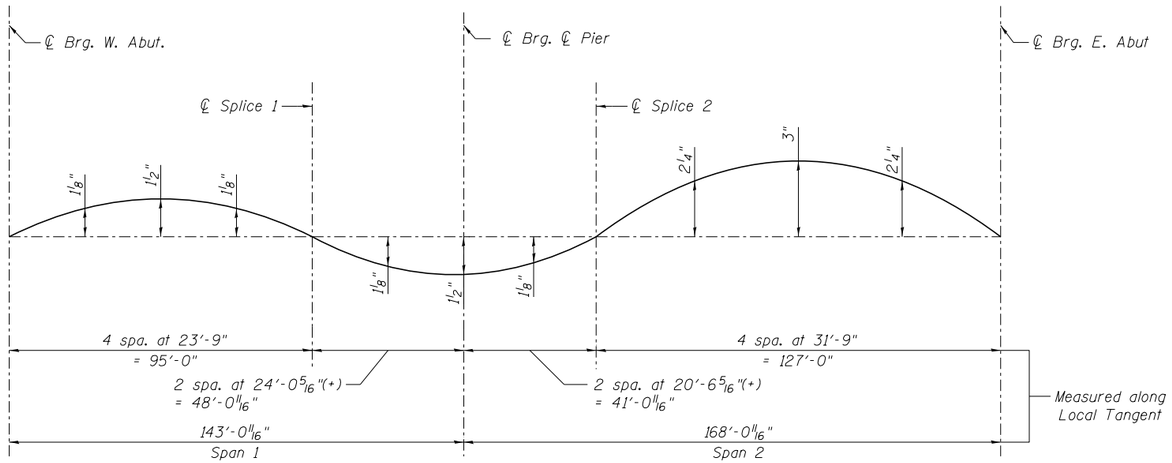

CAMBER DIAGRAM

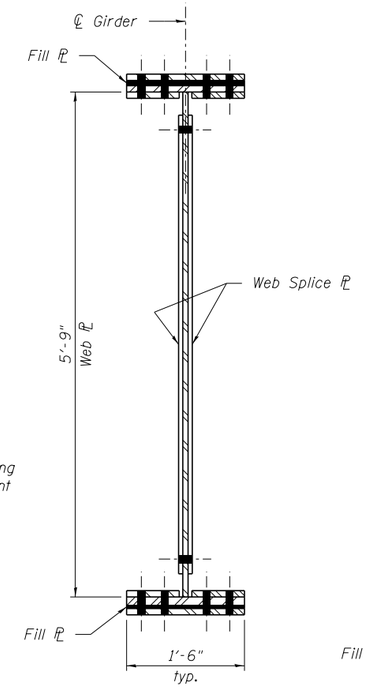

SECTION H-H

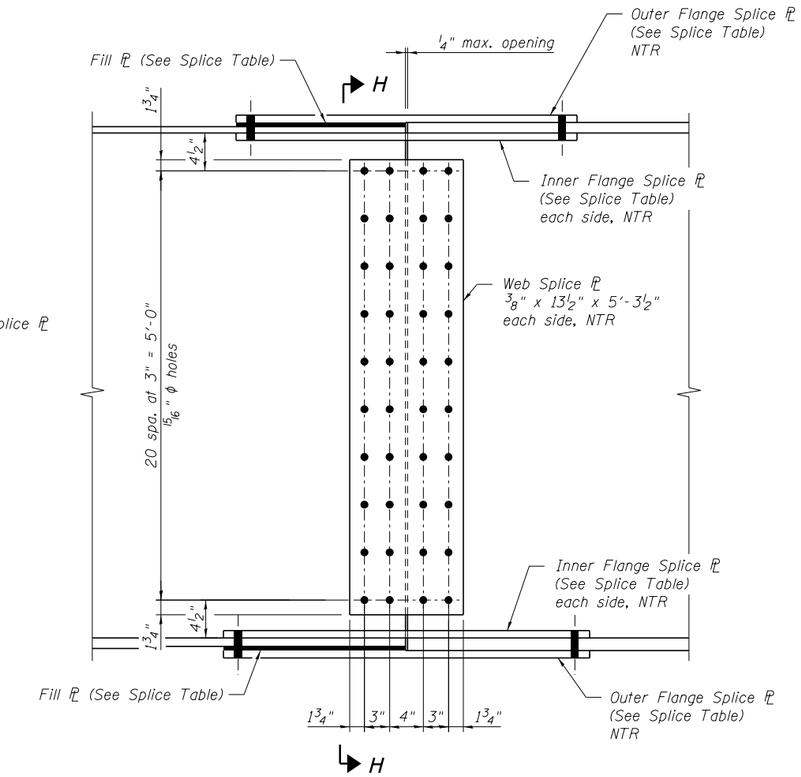

ELEVATION - FIELD SPLICE

(Splice 1 shown, Splice 2 opposite hand)
(84 Bolts per Web Splice)

TOP OF WEB ELEVATIONS

Location	Girder 1	Girder 2	Girder 3	Girder 4	Girder 5	Girder 6	Girder 7	Girder 8	Girder 9	Girder 10	Girder 11	Girder 12	Girder 13	Girder 14
Brg. W. Abut.	747.72	747.88	747.75	747.54	747.34	747.14	746.94	746.88	747.01	746.81	746.60	746.40	746.20	746.00
Splice 1	747.35	747.51	747.31	747.11	746.91	746.71	746.51	746.49	746.58	746.38	746.18	745.98	745.77	745.57
Brg. Pier 1	747.04	747.20	747.00	746.80	746.60	746.40	746.19	746.19	746.27	746.07	745.87	745.66	745.46	745.26
Splice 2	747.02	747.16	746.96	746.76	746.56	746.36	746.16	746.16	746.23	746.03	745.83	745.63	745.43	745.22
Brg. E. Abut.	746.37	746.52	746.32	746.11	745.91	745.70	745.49	745.46	745.55	745.34	745.13	744.91	744.70	744.49

For fabricator use only.

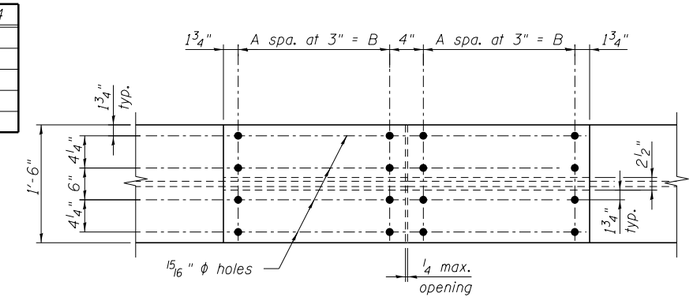

FLANGE SPLICE

(Top & Bottom Flanges)

SPLICE TABLE

Splice Location	Top Flange						Bottom Flange					
	Outer Flange PL	Inner Flange PL	Fill PL	A	B	No. Bolts	Outer Flange PL	Inner Flange PL	Fill PL	A	B	No. Bolts
Splice 1	1/2"x18"x2'-7 1/2"	5/8"x7 3/4"x2'-7 1/2"	1/2"x18"x1'-3 5/8"	4	1'-0"	40	1/2"x18"x2'-7 1/2"	5/8"x7 3/4"x 2'-7 1/2"	1/4"x18"x1'-3 5/8"	4	1'-0"	40
Splice 2	7/8"x18"x4'-7 1/2"	1"x7 3/4"x4'-7 1/2"	1/4"x18"x2'-3 5/8"	8	2'-0"	72	1"x18"x4'-7 1/2"	1 1/4"x7 3/4"x4'-7 1/2"	None	8	2'-0"	72

NOTES:

1. All Splice Plates, except fill plates, shall be AASHTO M270 Grade 50 steel unless otherwise noted.
2. All Splice Bolts shall be 7/8" ϕ ASTM A325 High Strength with 15/16" ϕ holes.
3. Load carrying components designated "NTR" shall conform to the Impact Testing Requirements, Zone 2.
4. All splices are symmetrical about ℄ splice except for fill PL.

benesch
engineers · scientists · planners
Alfred Benesch & Company
205 North Michigan Avenue, Suite 2400
Chicago, Illinois 60601
312-565-0450 Job No. 10056

FILE NAME = 0900169_68620_33_stdt4.dgn	USER NAME = mbecker	DESIGNED - MFB	REVISED -
		CHECKED - MRB/KWS	REVISED -
	PLOT SCALE =	DRAWN - PRT	REVISED -
	PLOT DATE = 7/16/2012	CHECKED - MRB	REVISED -

STATE OF ILLINOIS
DEPARTMENT OF TRANSPORTATION

GIRDER DETAILS 4 OF 4
STRUCTURE NO. 090-0169
SHEET NO. SC33 OF SC63 SHEETS

F.A.I. RTE.	SECTION	COUNTY	TOTAL SHEETS	SHEET NO.
74	90-(14R;(14HB-4,14,14HVB)BR)	TAZEWELL	2433	2009
		CONTRACT NO. 68620		
	ILLINOIS FED. AID PROJECT			

x:\10000s\10056\engineering_documents_phase_ii\74over_Jackson\Final\0900169_68620_33_stdt4.dgn 11:19:37 AM 7/16/2012

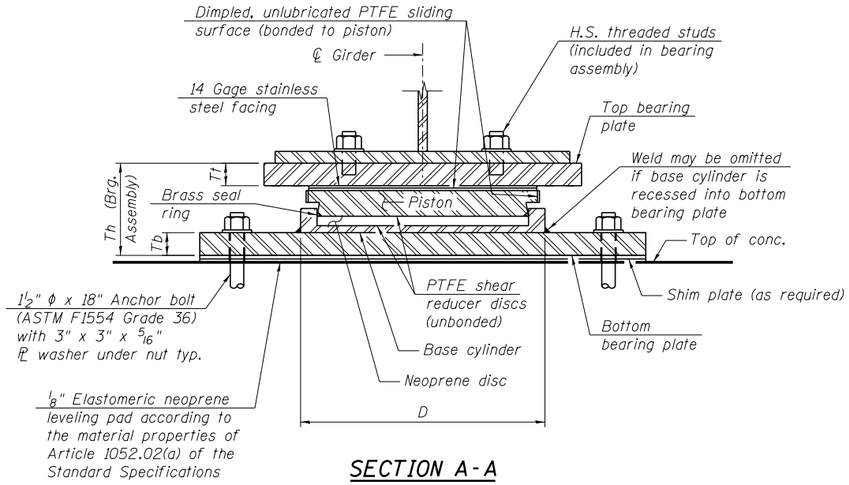

SECTION A-A

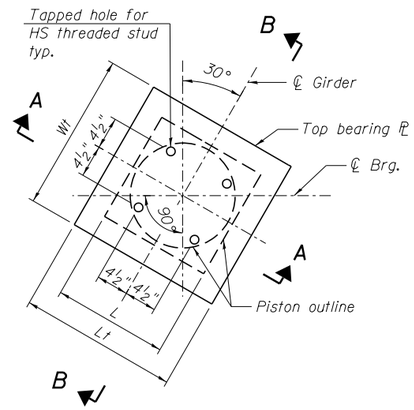

TOP BEARING ℙ AND PISTON PLAN

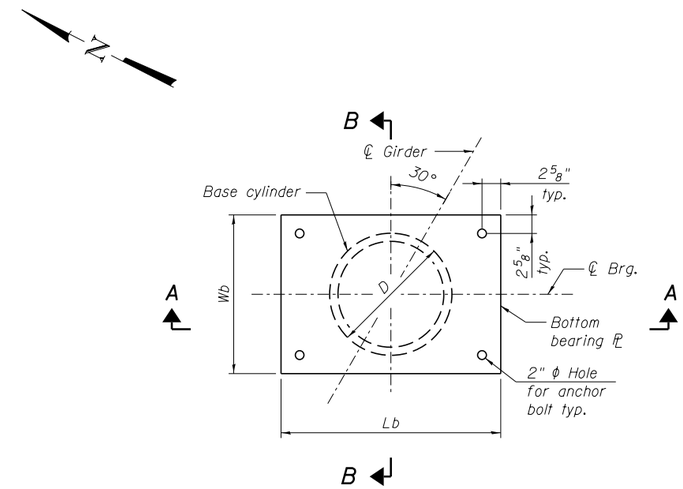

BOTTOM BEARING ℙ AND BASE CYLINDER PLAN

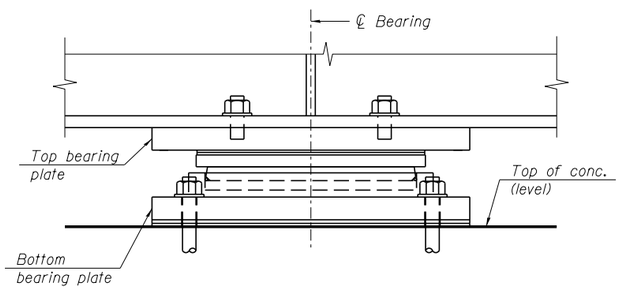

SECTION B-B

BILL OF MATERIAL

Item	Unit	Total
HLMR Bearings, Non-Guided Expansion, 600 kips	Ea.	4
Anchor Bolts, 1½"	Ea.	16

BEARING DIMENSIONS

Pier Location	Pay Item Designation (kips)	** Vert. Design Load (kips)	*** Required Rotation Range (radians)	**** Total Required Movement	Top Plate			Bearing Assembly		Bottom Plate			Total Ht.
					Wt	Lt	Tt	L	D	*Wb	*Lb	Tb	Th
Girders 1, 2, 13, 14	600	562	0.02	½"	1'-8¼"	1'-8¼"	2⅝"	1'-3½"	1'-5"	2'-0"	2'-6"	1⅝"	8½"

*To be verified by the contractor for proper access of the drilling tool.
**Design Loads are the governing service loads.
***Rotation allowances for fabrication tolerances (0.005 radians) and installation uncertainties (0.005 radians) excluded.
****Total required movement is based on one way expansion (or contraction) of the superstructure perpendicular to the centerline of girder when bearings are set at 50°F. Bearing movement tolerances are excluded.

Note: HLMR Non-Guided Bearings have been provided at Girders 1, 2, 13 and 14 to account for relatively high thermal movement expected at the exterior girders due to the width of the bridge deck.

NOTES:

1. All steel for bearings shall conform to the requirements of AASHTO M270 Grade 50, unless otherwise noted.
2. Anchor bolts shall be ASTM F1554 all-thread (or an Engineer-approved alternate material) of the grade(s) and diameter(s) specified. The corresponding specified grade of AASHTO M314 anchor bolts may be used in lieu of ASTM F1554. Anchor bolts may be either cast in place or installed in holes drilled after the supported member is in place. Drilled and set anchor bolts shall be installed according to Article 521.06 of the Standard Specifications.
3. PTFE and stainless steel materials shall conform to AASHTO requirements and the Special Provision for High Load Multi-Rotational Bearings.
4. Anchor bolts shall be hot-dipped galvanized in accordance with AASHTO M232 (ASTM A153). Studs, nuts, and washers shall be mechanically galvanized in accordance with AASHTO M298.
5. Bearings shall be assembled at the plant and delivered to the site as a complete unit. All bearings shall be marked prior to shipping. The marks shall include the bearing location on the bridge, an arrow indicating orientation, and the normal position of the bearing. All marks shall be permanent and be visible after the bearing is installed. All components of the bearing, including anchor bolts and sockets, shall be provided by a single manufacturer.
6. Disc bearings will be permitted as a substitute at no additional cost. Inverted pot bearings are not allowed.
7. Total bearing height (Th) is estimated based on manufacturer data. Actual bearing height may differ from contract plans. The Contractor shall be responsible for verifying bearing heights and adjusting seat elevations, if required, prior to placing pier concrete.
8. Bearing assemblies shall be designed and assembled to allow for replacement by jacking the superstructure.
9. Two ⅛ in. adjusting shims shall be provided for each bearing in addition to all other plates or shims and placed as shown on bearing details.

benesch engineers · scientists · planners
Alfred Benesch & Company
205 North Michigan Avenue, Suite 2400
Chicago, Illinois 60601
312-565-0450 Job No. 10056

FILE NAME = 0900169_68620_34_brgs.dgn	USER NAME = mbecker	DESIGNED - SCW	REVISED -
		CHECKED - AAY	REVISED -
	PLOT SCALE =	DRAWN - PRT	REVISED -
	PLOT DATE = 7/16/2012	CHECKED - AAY	REVISED -

STATE OF ILLINOIS
DEPARTMENT OF TRANSPORTATION

HLMR NON-GUIDED EXPANSION BEARING DETAILS
STRUCTURE NO. 090-0169
SHEET NO. SC34 OF SC63 SHEETS

F.A.I. RTE.	SECTION	COUNTY	TOTAL SHEETS	SHEET NO.
74	90-(14R;(14HB-4,14,14HVB)BR)	TAZEWELL	2433	2010
		CONTRACT NO. 68620		
		ILLINOIS FED. AID PROJECT		

x:\10000s\10056\engineering_documents_phase_ii\174over_Jackson\Final\0900169_68620_34_brgs.dgn 7/16/2012 1:41:37 PM

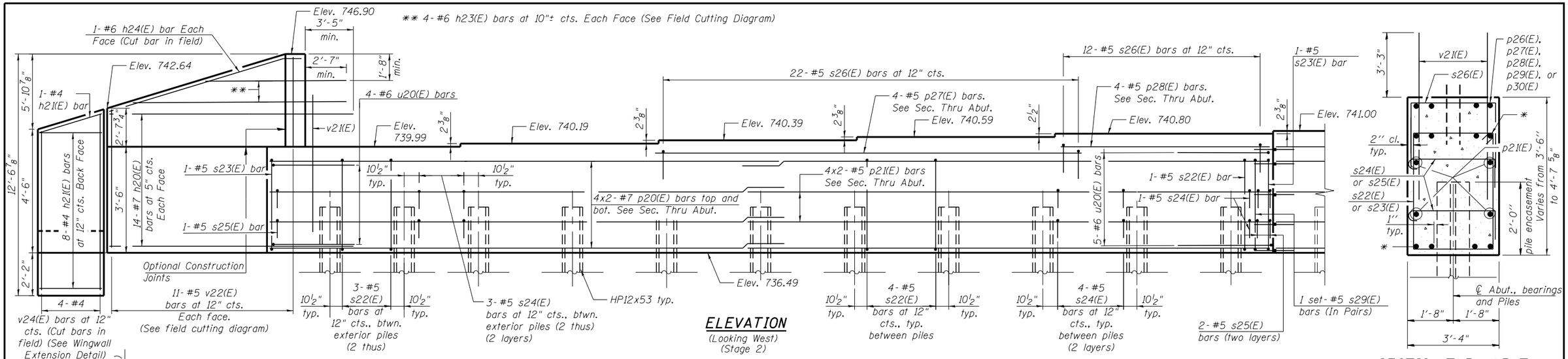

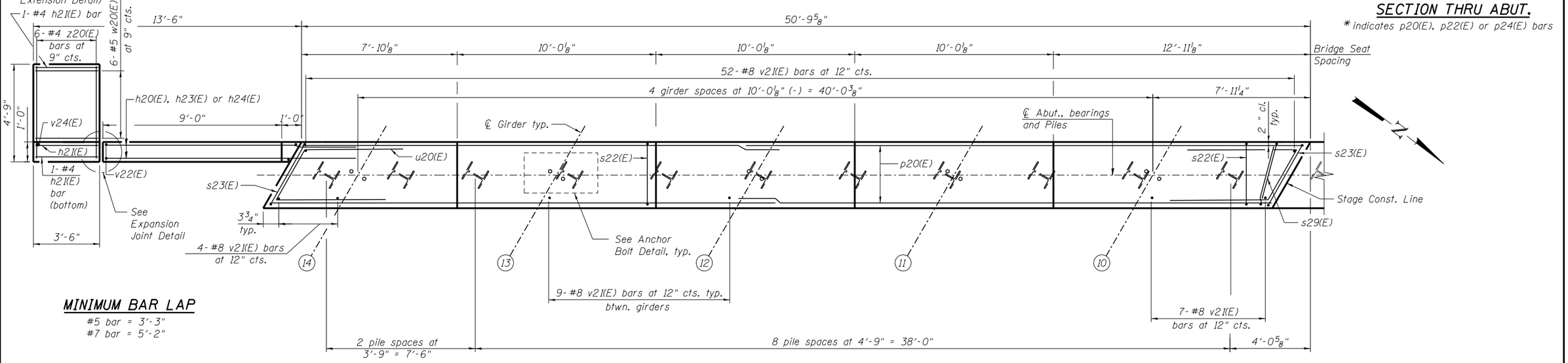

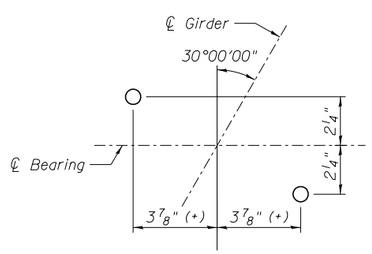

ANCHOR BOLT DETAIL

PILE DATA

Type: HP12x53
Nominal Required Bearing: 288 kips
Factored Resistance Available: 158 kips
Est. Length: 75 ft.
No. Production Piles: 29
No. Test Piles: 1

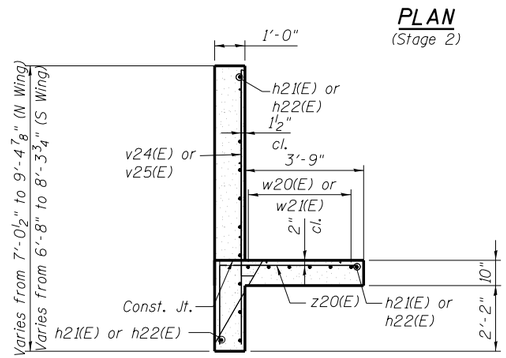

WINGWALL EXTENSION DETAIL

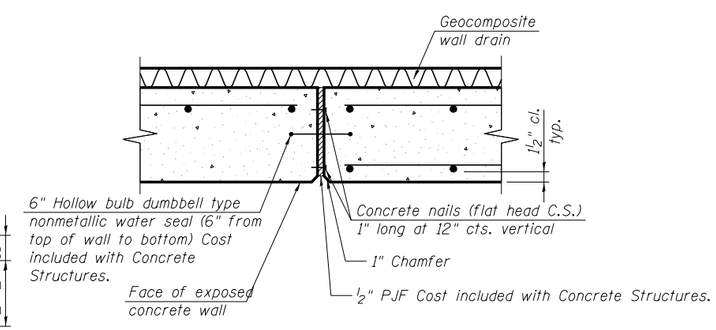

EXPANSION JOINT DETAIL

NOTES:

1. For details of Bar Splicers, see sheet SC44.
2. For details of piles and Concrete Encasement, see sheet SC43.
3. Pour steps monolithically with cap.
4. For Bill of Material and Bar List, see sheet SC36.
5. Adjust bar spacing to avoid anchor bolt locations.
6. Adjust s29(E) bars in field to form a single closed stirrup between the s22(E) bar and s23(E) bar.

benesch engineers · scientists · planners
Alfred Benesch & Company
205 North Michigan Avenue, Suite 2400
Chicago, Illinois 60601
312-565-0450 Job No. 10056

FILE NAME = 0900169_68620_35_abut1.dgn	USER NAME = mbecker	DESIGNED - DTS	REVISED -
		CHECKED - SLD/JLS	REVISED -
	PLOT SCALE =	DRAWN - PRT/DTS	REVISED -
	PLOT DATE = 7/18/2012	CHECKED - SLD	REVISED -

STATE OF ILLINOIS
DEPARTMENT OF TRANSPORTATION

WEST ABUTMENT DETAILS 1 OF 3
STRUCTURE NO. 090-0169

SHEET NO. SC35 OF SC63 SHEETS

F.A.I. RTE.	SECTION	COUNTY	TOTAL SHEETS	SHEET NO.
74	90-(14R;(14HB-4,14,14HVB)BR)	TAZEWELL	2433	2011
		CONTRACT NO. 68620		
		ILLINOIS FED. AID PROJECT		

x:\10000s\10056\engineering_documents_phase_ii\174over_Jackson\Final\0900169_68620_35_abut1.dgn 8:10:58 AM 7/18/2012

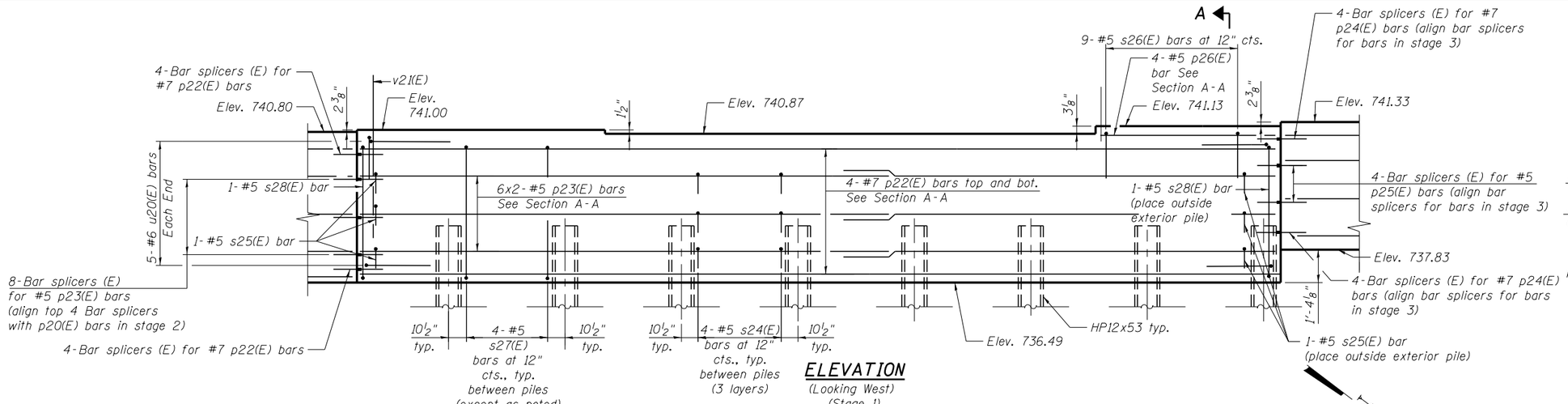

ELEVATION
(Looking West)
(Stage 1)

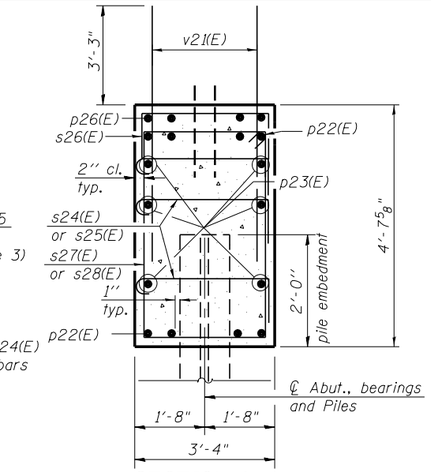

SECTION A-A

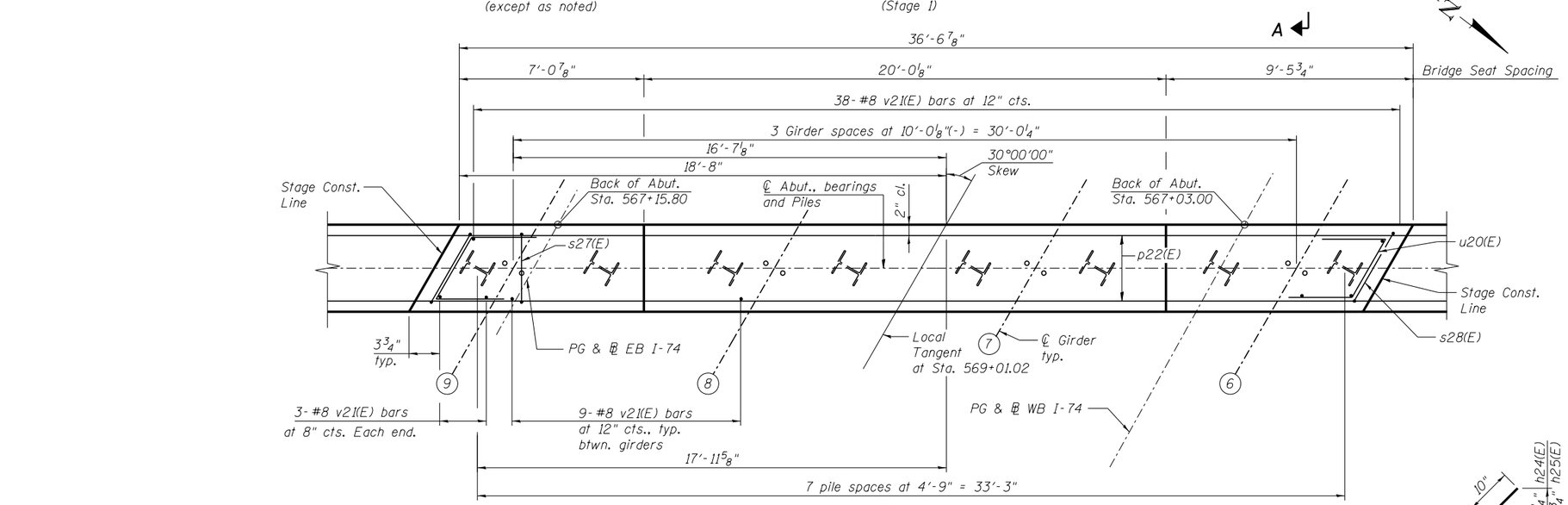

PLAN
(Stage 1)

BILL OF MATERIAL

Bar	No.	Size	Length	Shape
h20(E)	62	#7	13'-6"	
h21(E)	11	#4	3'-2"	
h22(E)	11	#4	5'-8"	
h23(E)	7	#6	20'-1"	
h24(E)	2	#6	10'-6"	
h25(E)	2	#6	10'-2"	
p20(E)	16	#7	28'-0"	
p21(E)	8	#5	27'-0"	
p22(E)	8	#7	36'-2"	
p23(E)	12	#5	19'-9"	
p24(E)	16	#7	27'-9"	
p25(E)	8	#5	26'-9"	
p26(E)	4	#5	7'-3"	
p27(E)	4	#5	23'-3"	
p28(E)	4	#5	10'-9"	
p29(E)	8	#5	22'-0"	
p30(E)	4	#5	9'-8"	
s22(E)	78	#5	13'-3"	
s23(E)	4	#5	14'-3"	
s24(E)	240	#5	4'-4"	
s25(E)	14	#5	4'-10"	
s26(E)	82	#5	6'-10"	
s27(E)	28	#5	14'-9"	
s28(E)	2	#5	15'-9"	
s29(E)	4	#5	9'-2"	
u20(E)	27	#6	11'-0"	
v21(E)	268	#8	6'-6"	
v22(E)	11	#5	15'-9"	
v23(E)	11	#5	17'-3"	
v24(E)	4	#4	7'-11"	
v25(E)	7	#4	9'-0"	
w20(E)	6	#5	3'-2"	
w21(E)	6	#5	5'-8"	
z20(E)	15	#4	7'-2"	
Structure Excavation			Cu. Yd.	406
Concrete Structures			Cu. Yd.	78.7
Reinforcement Bars, Epoxy Coated			Pound	14,610
Furnishing Steel Piles HP12x53			Foot	2,175
Driving Piles			Foot	2,175
Test Pile Steel HP12x53			Each	1
Pile Shoes			Each	30

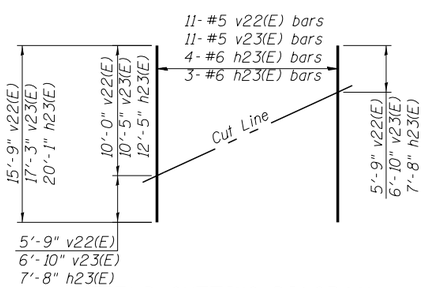

FIELD CUTTING DIAGRAM
Order v22(E), v23(E) and h23(E) full length. Cut as shown and use remainder of bars in opposite face.

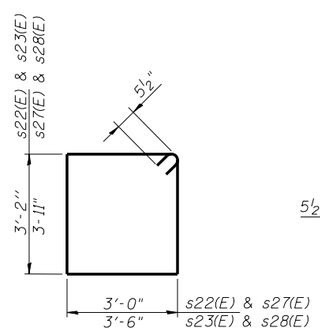

BARS s22(E), s23(E), s27(E) & s28(E)

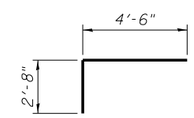

BAR z20(E)

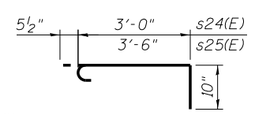

BARS s24(E) & s25(E)

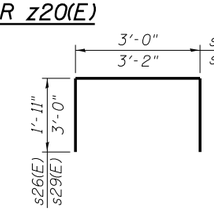

BARS s26(E) & s29(E)

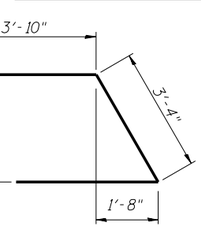

BAR u20(E)

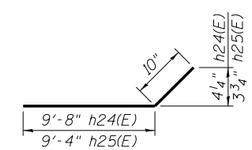

BARS h24(E) & h25(E)

Bars indicated 4x2-#5 etc. indicates 4 lines of bars with 2 lengths per line.

benesch
engineers · scientists · planners
Alfred Benesch & Company
205 North Michigan Avenue, Suite 2400
Chicago, Illinois 60601
312-565-0450 Job No. 10056

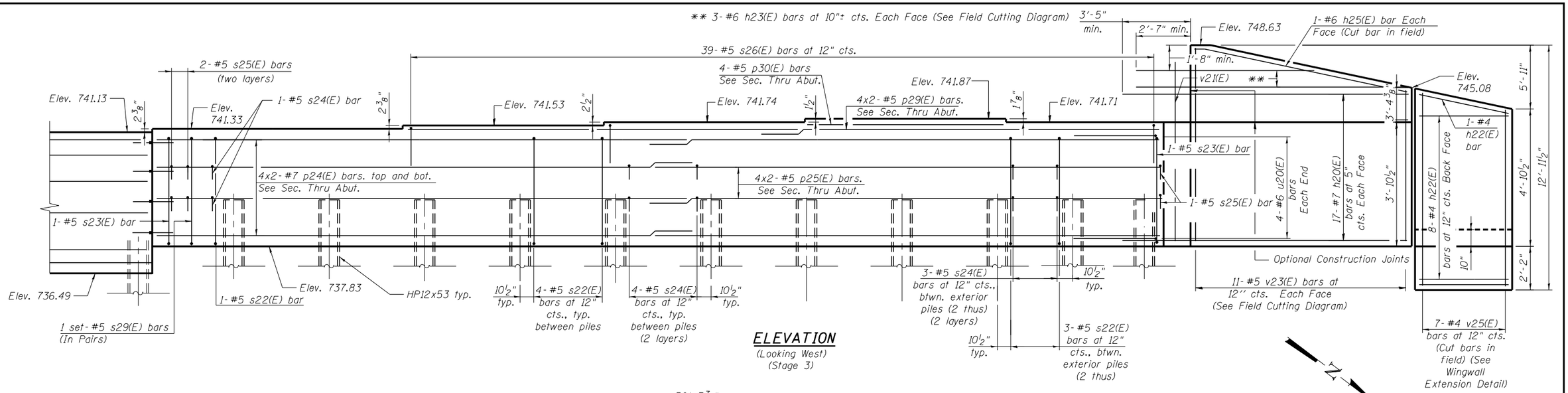

ELEVATION
(Looking West)
(Stage 3)

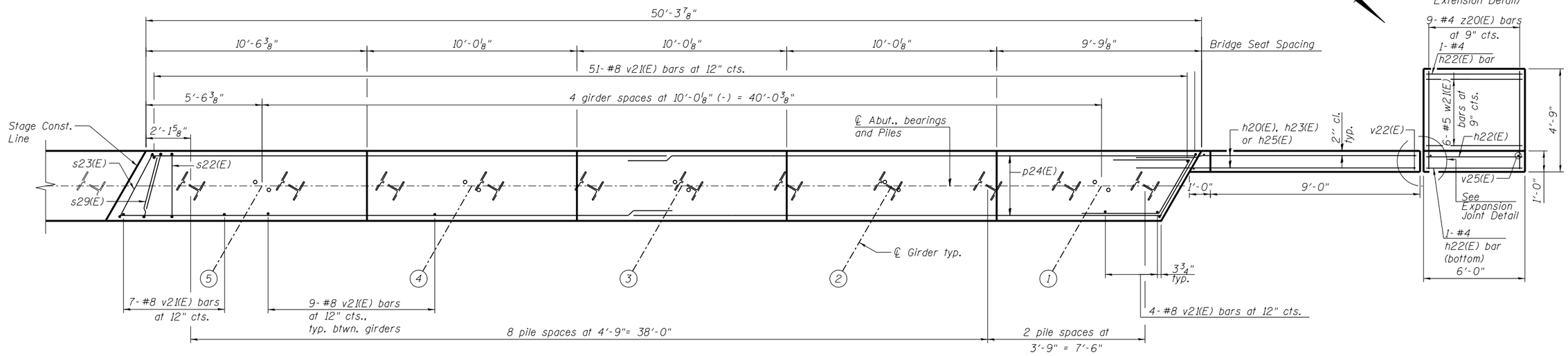

PLAN
(Stage 3)

NOTE:

For Section Thru Abut., Expansion Joint Detail, and Wingwall Extension Detail, see sheet SC35.

benesch
engineers · scientists · planners
Alfred Benesch & Company
205 North Michigan Avenue, Suite 2400
Chicago, Illinois 60601
312-565-0450 Job No. 10056

FILE NAME = 0900169_68620_37_abut3.dgn	USER NAME = mbecker	DESIGNED - DTS	REVISED -
		CHECKED - SLD	REVISED -
	PLOT SCALE =	DRAWN - PRT/DTS	REVISED -
	PLOT DATE = 7/18/2012	CHECKED - SLD	REVISED -

STATE OF ILLINOIS
DEPARTMENT OF TRANSPORTATION

WEST ABUTMENT DETAILS 3 OF 3
STRUCTURE NO. 090-0169
SHEET NO. SC37 OF SC63 SHEETS

F.A.I. RTE.	SECTION	COUNTY	TOTAL SHEETS	SHEET NO.
74	90-(14R;(14HB-4,14,14HVB)BR)	TAZEWELL	2433	2013
		CONTRACT NO. 68620		
	ILLINOIS FED. AID PROJECT			

x:\10000s\10056\engineering_documents_phase_ii\74overJackson\Final\0900169_68620_37_abut3.dgn 8:11:01 AM 7/18/2012

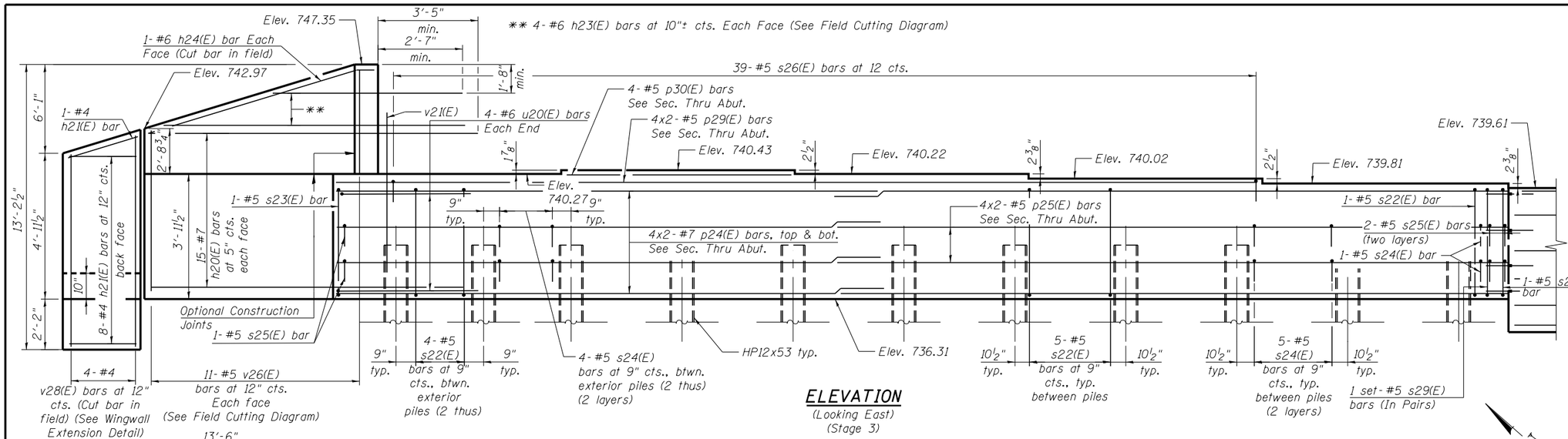

ELEVATION
(Looking East)
(Stage 3)

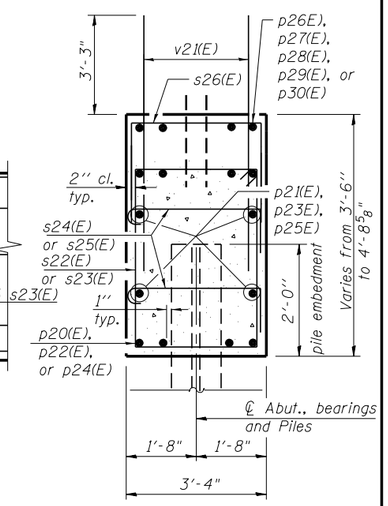

SECTION THRU ABUT.

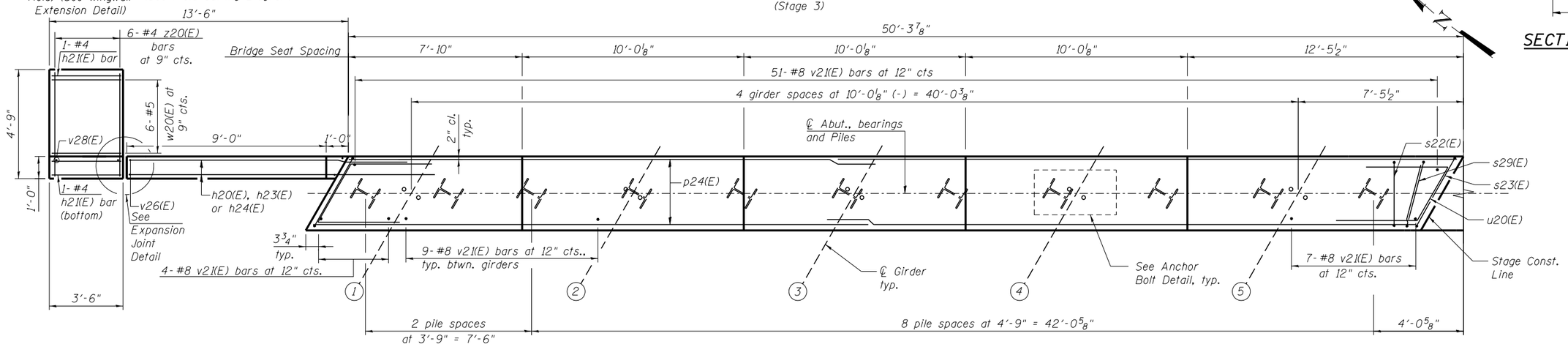

PLAN
(Stage 3)

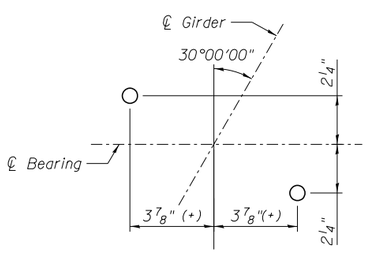

ANCHOR BOLT DETAIL

PILE DATA

Type: HP12x53
Nominal Required Bearing: 342 kips
Factored Resistance Available: 188 kips
Est. Length: 67 ft.
No. Production Piles: 29
No. Test Piles: 1

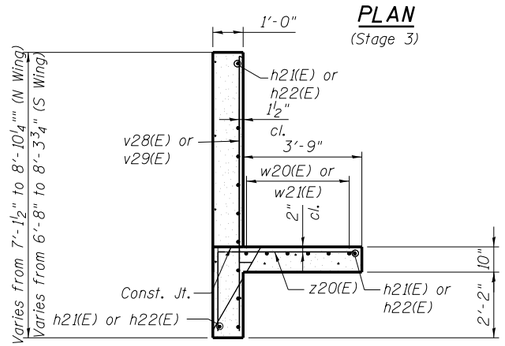

WINGWALL EXTENSION DETAIL

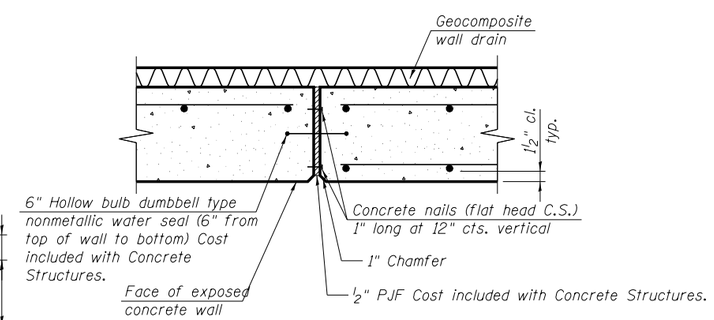

EXPANSION JOINT DETAIL

NOTES:

1. For details of Bar Splicers, see sheet SC44.
2. For details of piles and Concrete Encasement, see sheet SC43
3. Pour steps monolithically with cap.
4. For Bill of Material and Bar List, see sheet SC39.
5. Adjust bar spacing to avoid anchor bolt locations.
6. Adjust s29(E) bars in field to form a single closed stirrup between the s22(E) bar and s23(E) bar.

benesch engineers · scientists · planners
Alfred Benesch & Company
205 North Michigan Avenue, Suite 2400
Chicago, Illinois 60601
312-565-0450 Job No. 10056

FILE NAME = 0900169_68620_38_abut4.dgn	USER NAME = mbecker	DESIGNED - DTS	REVISED -	STATE OF ILLINOIS DEPARTMENT OF TRANSPORTATION	EAST ABUTMENT DETAILS 1 OF 3 STRUCTURE NO. 090-0169	F.A.I. RTE.	SECTION	COUNTY	TOTAL SHEETS / SHEET NO.
		CHECKED - SLD/JLS	REVISED -			74	90-(14R;(14HB-4,14,14HVB)BR)	TAZEWELL	2433 / 2014
	PLOT SCALE =	DRAWN - PRT/DTS	REVISED -					CONTRACT NO. 68620	
	PLOT DATE = 7/18/2012	CHECKED - SLD	REVISED -		SHEET NO. SC38 OF SC63 SHEETS		ILLINOIS FED. AID PROJECT		

x:\10000s\10056\engineering_documents_phase_ii\174over_Jackson\Final\0900169_68620_38_abut4.dgn 8:11:02 AM 7/18/2012

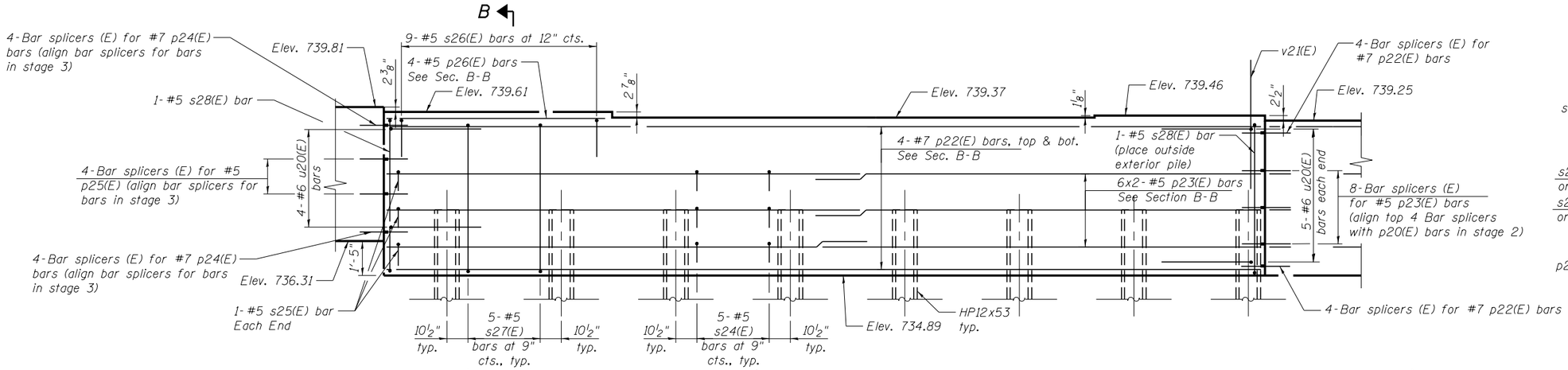

ELEVATION
(Looking East)
(Stage 1)

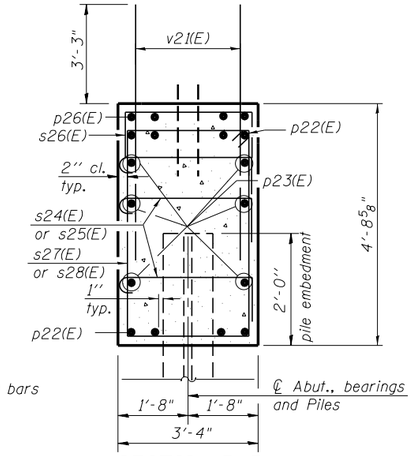

SECTION B-B

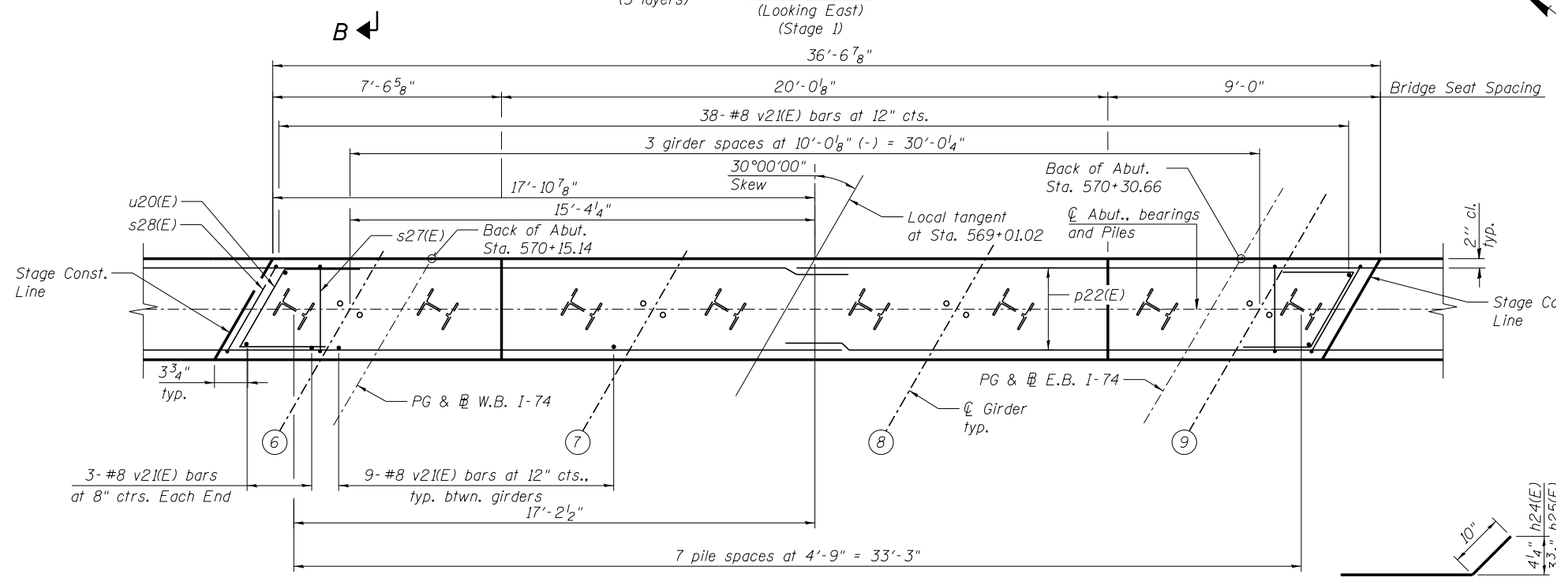

PLAN
(Stage 1)

BILL OF MATERIAL

Bar	No.	Size	Length	Shape
h20(E)	64	#7	13'-6"	
h21(E)	11	#4	3'-2"	
h22(E)	11	#4	5'-8"	
h23(E)	7	#6	20'-1"	
h24(E)	2	#6	10'-6"	
h25(E)	2	#6	10'-2"	
p20(E)	16	#7	28'-0"	
p21(E)	8	#5	27'-0"	
p22(E)	8	#7	36'-2"	
p23(E)	12	#5	19'-9"	
p24(E)	16	#7	27'-9"	
p25(E)	8	#5	26'-9"	
p26(E)	4	#5	7'-3"	
p27(E)	4	#5	23'-3"	
p28(E)	4	#5	10'-9"	
p29(E)	8	#5	22'-0"	
p30(E)	4	#5	9'-8"	
s22(E)	98	#5	13'-3"	
s23(E)	6	#5	14'-3"	
s24(E)	301	#5	4'-4"	
s25(E)	18	#5	4'-10"	
s26(E)	82	#5	6'-10"	
s27(E)	35	#5	14'-9"	
s28(E)	2	#5	15'-9"	
s29(E)	4	#5	9'-2"	
u20(E)	27	#6	11'-0"	
v21(E)	268	#8	6'-6"	
v26(E)	11	#5	16'-11"	
v27(E)	11	#5	16'-8"	
v28(E)	4	#4	8'-5"	
v29(E)	7	#4	8'-8"	
w20(E)	6	#5	3'-2"	
w21(E)	6	#5	5'-8"	
z20(E)	15	#4	7'-2"	
Structure Excavation			Cu. Yd.	420
Concrete Structures			Cu. Yd.	79.5
Reinforcement Bars, Epoxy Coated			Pound	15,380
Furnishing Steel Piles HP12x53			Foot	1,943
Driving Piles			Foot	1,943
Test Pile Steel HP12x53			Each	1
Pile Shoes			Each	30

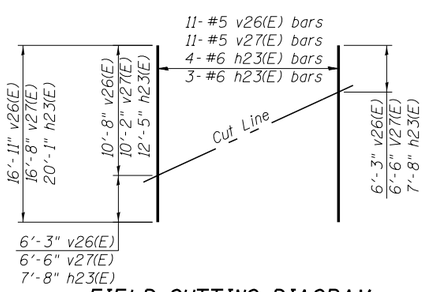

FIELD CUTTING DIAGRAM
Order v26(E), v27(E) and h23(E) full length. Cut as shown and use remainder of bars in opposite face.

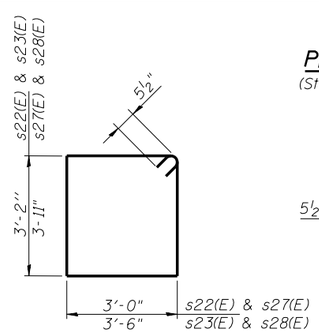

BARS s22(E), s23(E), s27(E) & s28(E)

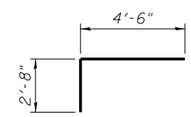

BAR z20(E)

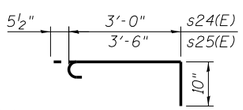

BARS s24(E) & s25(E)

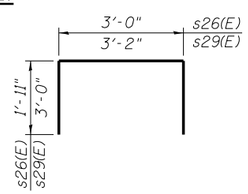

BARS s26(E) & s29(E)

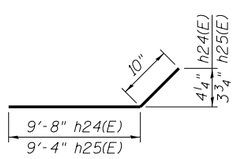

BARS h24(E) & h25(E)

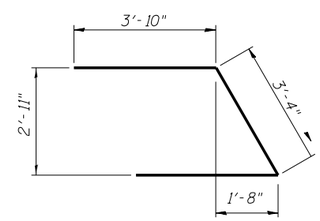

BAR u20(E)

Bars indicated 4x2-#5 etc. indicates 4 lines of bars with 2 lengths per line.

benesch
engineers · scientists · planners
Alfred Benesch & Company
205 North Michigan Avenue, Suite 2400
Chicago, Illinois 60601
312-565-0450 Job No. 10056

FILE NAME = 0900169_68620_39_abut5.dgn	USER NAME = mbecker	DESIGNED - DTS	REVISED -
		CHECKED - SLD	REVISED -
	PLOT SCALE =	DRAWN - PRT/SLD	REVISED -
	PLOT DATE = 7/18/2012	CHECKED - SLD	REVISED -

STATE OF ILLINOIS
DEPARTMENT OF TRANSPORTATION

EAST ABUTMENT DETAILS 2 OF 3
STRUCTURE NO. 090-0169
SHEET NO. SC39 OF SC63 SHEETS

F.A.I. RTE.	SECTION	COUNTY	TOTAL SHEETS	SHEET NO.
74	90-(14R;(14HB-4,14,14HVB)BR)	TAZEWELL	2433	2015
		CONTRACT NO. 68620		
		ILLINOIS FED. AID PROJECT		

x:\10000s\10056\engineering_documents_phase_ii\I74overJackson\Final\0900169_68620_39_abut5.dgn 8:11:03 AM 7/18/2012

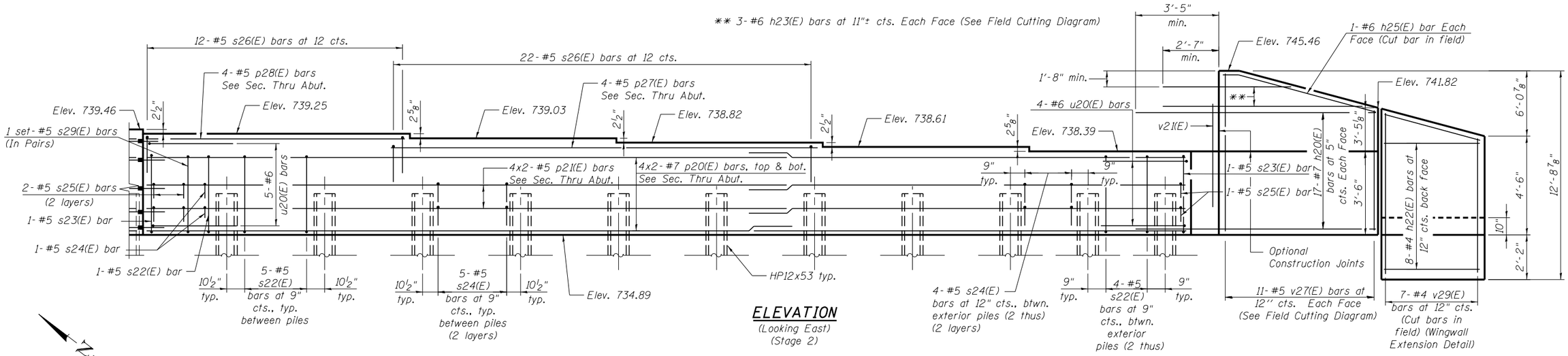

ELEVATION
(Looking East)
(Stage 2)

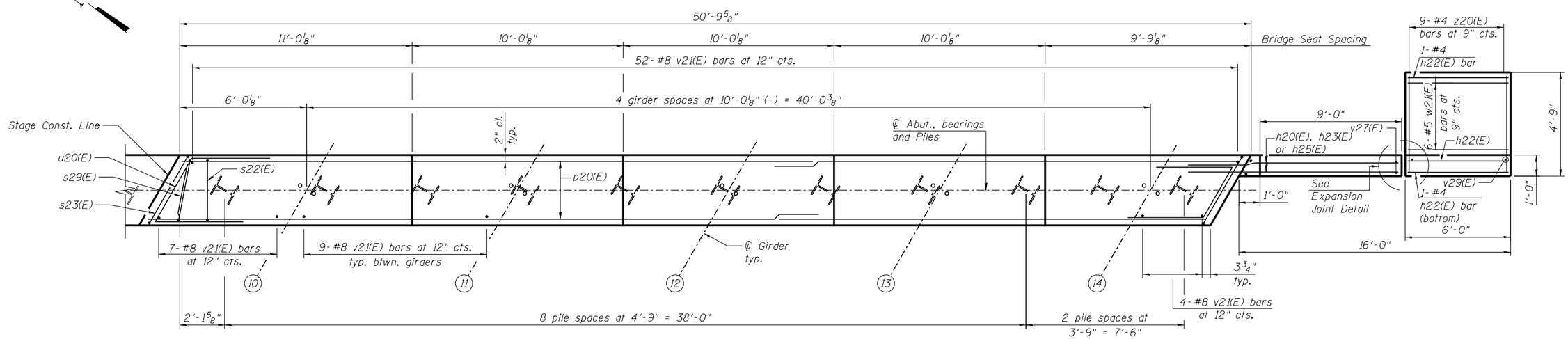

PLAN
(Stage 2)

NOTE:

For Section Thru Abut., Expansion Joint Detail, and Wingwall Extension Detail, see sheet SC38.

benesch engineers · scientists · planners
Alfred Benesch & Company
205 North Michigan Avenue, Suite 2400
Chicago, Illinois 60601
312-565-0450 Job No. 10056

FILE NAME = 0900169_68620_40_abut6.dgn	USER NAME = mbecker	DESIGNED - DTS	REVISED -
		CHECKED - SLD	REVISED -
	PLOT SCALE =	DRAWN - PRT/DTS	REVISED -
	PLOT DATE = 7/18/2012	CHECKED - SLD	REVISED -

STATE OF ILLINOIS
DEPARTMENT OF TRANSPORTATION

EAST ABUTMENT DETAILS 3 OF 3
STRUCTURE NO. 090-0169
SHEET NO. SC40 OF SC63 SHEETS

F.A.I. RTE.	SECTION	COUNTY	TOTAL SHEETS	SHEET NO.
74	90-(14R;14HB-4,14,14HVB)BR)	TAZEWELL	2433	2016
		CONTRACT NO. 68620		
		ILLINOIS FED. AID PROJECT		

x:\10000s\10056\engineering_documents_phase_ii\174over-Jackson\Final\0900169_68620_40_abut6.dgn 8:11:05 AM 7/18/2012

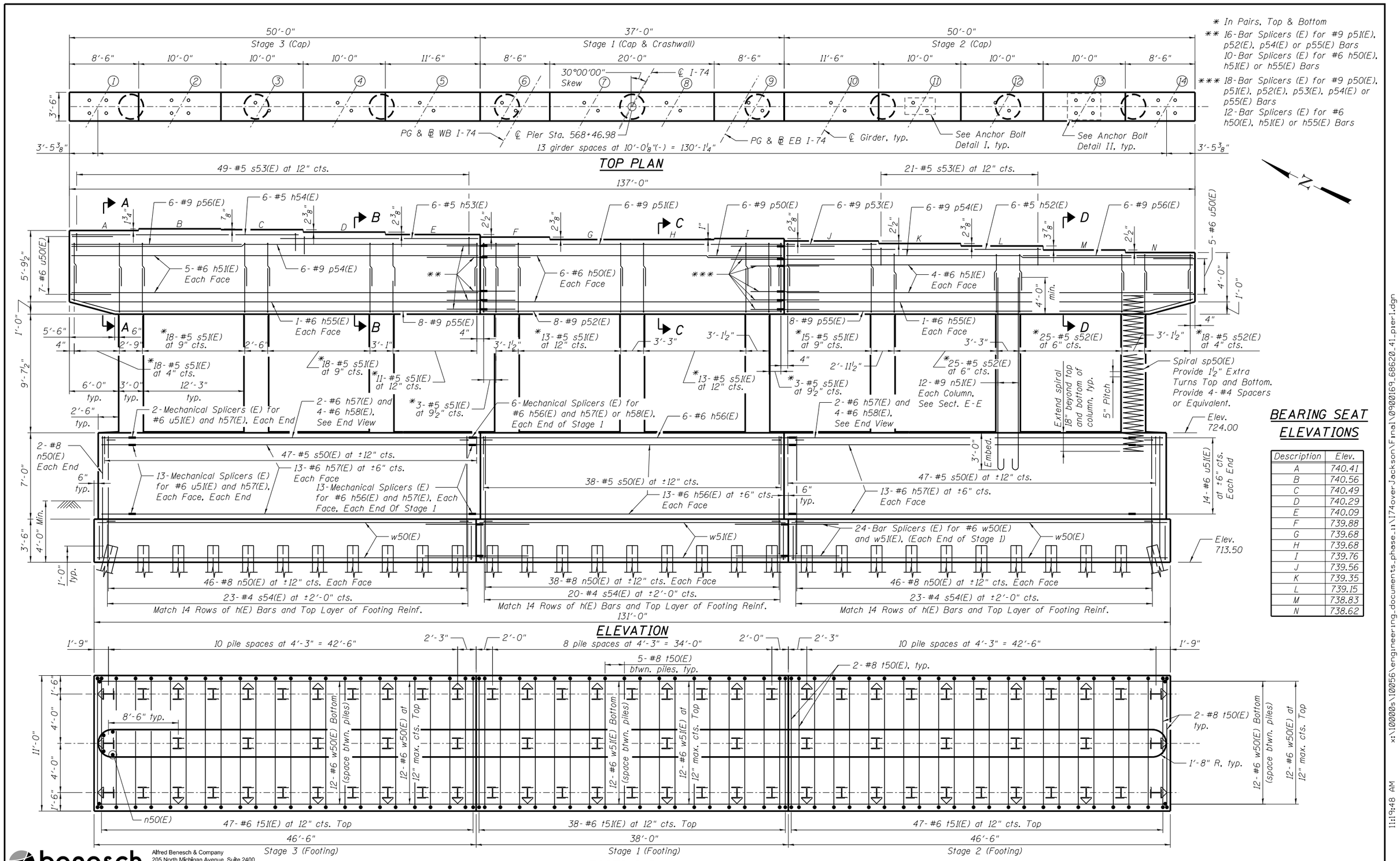

BEARING SEAT ELEVATIONS

Description	Elev.
A	740.41
B	740.56
C	740.49
D	740.29
E	740.09
F	739.88
G	739.68
H	739.68
I	739.76
J	739.56
K	739.35
L	739.15
M	738.83
N	738.62

benesch
engineers · scientists · planners

Alfred Benesch & Company
205 North Michigan Avenue, Suite 2400
Chicago, Illinois 60601
312-565-0450 Job No. 10056

FILE NAME = 0900169_68620_41_pier1.dgn	USER NAME = mbecker	DESIGNED - SCW	REVISED -
		CHECKED - AMB	REVISED -
	PLOT SCALE =	DRAWN - CBS	REVISED -
	PLOT DATE = 7/16/2012	CHECKED - MRB	REVISED -

STATE OF ILLINOIS
DEPARTMENT OF TRANSPORTATION

PIER DETAILS 1 OF 2
STRUCTURE NO. 090-0169
SHEET NO. SC41 OF SC63 SHEETS

F.A.I. RTE.	SECTION	COUNTY	TOTAL SHEETS	SHEET NO.
74	90-[14R;(14HB-4,14,14HVB)BR]	TAZEWELL	2433	2017

CONTRACT NO. 68620
ILLINOIS FED. AID PROJECT

x:\10000s\10056\engineering_documents_phase_ii\I74overJackson\Final\0900169_68620_41_pier1.dgn 11:19:48 AM 7/16/2012

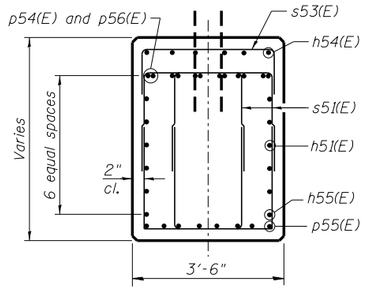

SECTION A-A

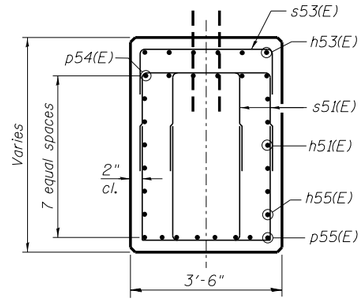

SECTION B-B

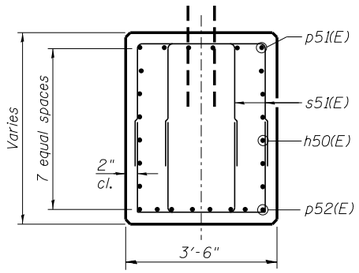

SECTION C-C

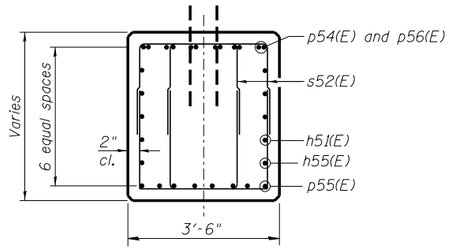

SECTION D-D

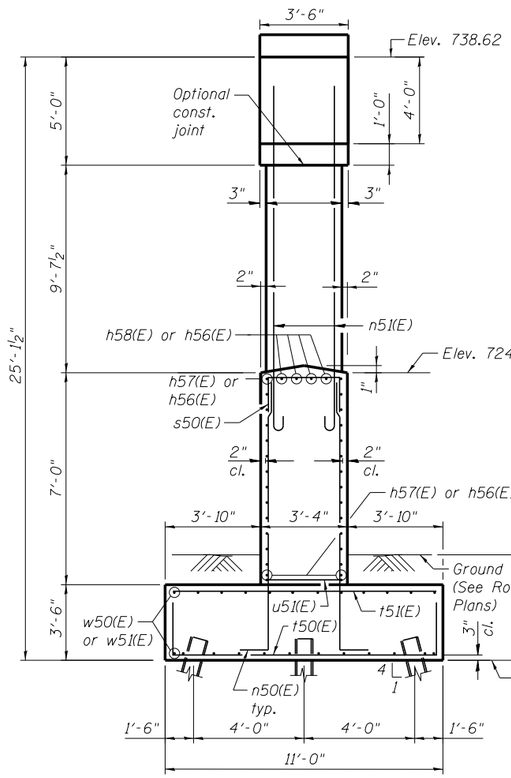

END VIEW
(Looking North)

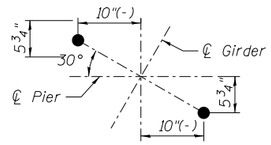

ANCHOR BOLT DETAIL I
(Girders 3 thru 12)

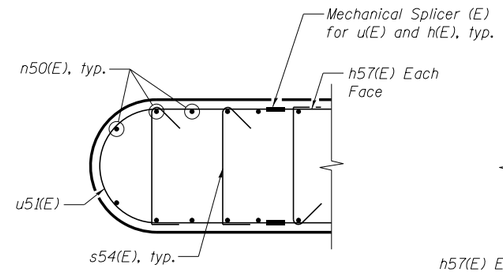

CRASHWALL SECTION AT END

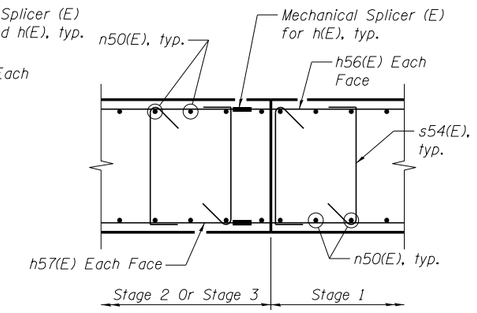

CRASHWALL SECTION AT STAGE CONST. LINE

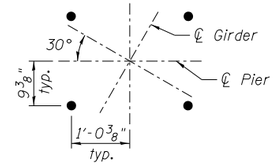

ANCHOR BOLT DETAIL II
(Girders 1, 2, 13 & 14)

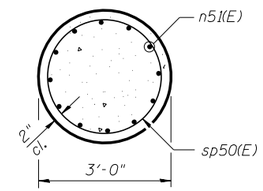

SECTION E-E

PILE DATA

Type: HP14x89
Nominal Required Bearing: 339 kips
Factored Resistance Available: 187 kips
Est. Length: 56 ft
No. Production Piles: 77
No. Test Piles: 1

BILL OF MATERIAL

Bar	No.	Size	Length	Shape
h50(E)	12	#6	36'-9"	
h51(E)	18	#6	49'-9"	
h52(E)	6	#5	22'-0"	
h53(E)	6	#5	23'-4"	
h54(E)	6	#5	28'-1"	
h55(E)	4	#6	47'-0"	
h56(E)	32	#6	39'-0"	
h57(E)	56	#6	40'-7"	
h58(E)	8	#6	44'-10"	
n50(E)	264	#8	11'-3"	
n51(E)	108	#9	17'-11"	
p50(E)	6	#9	12'-0"	
p51(E)	6	#9	36'-9"	
p52(E)	8	#9	36'-9"	
p53(E)	6	#9	11'-3"	
p54(E)	12	#9	49'-9"	
p55(E)	16	#9	49'-8"	
p56(E)	12	#9	21'-0"	
s50(E)	132	#5	8'-0"	
s51(E)	408	#5	11'-0"	
s52(E)	272	#5	9'-8"	
s53(E)	64	#5	9'-2"	
s54(E)	990	#4	4'-1"	
* sp50(E)	9	#5	12'-8"	
t50(E)	152	#8	16'-6"	
t51(E)	132	#6	10'-6"	
u50(E)	12	#6	9'-8"	
u51(E)	28	#6	11'-3"	
w50(E)	48	#6	46'-2"	
w51(E)	24	#6	37'-9"	
Structure Excavation		Cu. Yd.	593	
Concrete Structures		Cu. Yd.	429.9	
Reinforcement Bars, Epoxy Coated		Pound	59,330	
Furnishing Steel Piles HP14x89		Foot	4,312	
Driving Piles		Foot	4,312	
Test Pile Steel HP14x89		Each	1	
Pile Shoes		Each	78	

*Length is height of spiral.

A & B DIMENSIONS

Bar	A	B
s50(E)	3'-0"	2'-6"
s51(E)	2'-2"	4'-5"
s52(E)	2'-2"	3'-9"
s53(E)	3'-2"	3'-0"

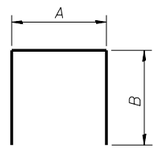

BARS s50(E), s51(E), s52(E) AND s53(E)

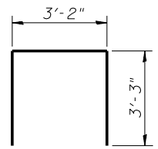

BAR u50(E)

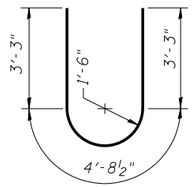

BAR u51(E)

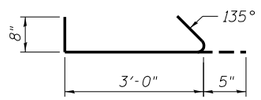

BAR s54(E)

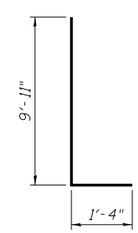

BAR n50(E)

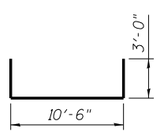

BAR t50(E)

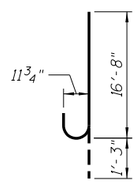

BAR n51(E)

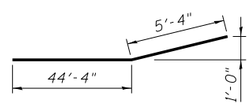

BAR p55(E)

NOTES:

1. Space reinforcement in cap to miss anchor bolts.
2. Pour steps monolithically with cap.
3. Dewatering may be required during structure excavation. Any costs associated with dewatering shall be included with Structure Excavation.

benesch
engineers · scientists · planners
Alfred Benesch & Company
205 North Michigan Avenue, Suite 2400
Chicago, Illinois 60601
312-565-0450 Job No. 10056

FILE NAME = 0900169_68620_42_pier2.dgn	USER NAME = mbecker	DESIGNED - SCW	REVISED -
		CHECKED - AMB	REVISED -
	PLOT SCALE =	DRAWN - CBS	REVISED -
	PLOT DATE = 7/16/2012	CHECKED - MRB	REVISED -

STATE OF ILLINOIS
DEPARTMENT OF TRANSPORTATION

PIER DETAILS 2 OF 2
STRUCTURE NO. 090-0169
SHEET NO. SC42 OF SC63 SHEETS

F.A.I. RTE.	SECTION	COUNTY	TOTAL SHEETS	SHEET NO.
74	90-(14R;(14HB-4,14,14HVB)BR)	TAZEWELL	2433	2018
		CONTRACT NO. 68620		
	ILLINOIS FED. AID PROJECT			

x:\10000s\10056\engineering_documents_phase_ii\174over_Jackson\Final\0900169_68620_42_pier2.dgn 11:19:49 AM 7/16/2012

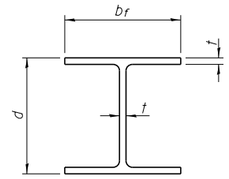

STEEL PILE TABLE

Designation	Depth d	Flange width b_f	Web and Flange thickness t	Encasement diameter A
HP 14x117	14 1/4"	14 7/8"	13/16"	30"
x102	14"	14 3/4"	11/16"	30"
x89	13 7/8"	14 3/4"	5/8"	30"
x73	13 5/8"	14 5/8"	1/2"	30"
HP 12x84	12 1/4"	12 1/4"	11/16"	24"
x74	12 1/8"	12 1/4"	5/8"	24"
x63	12"	12 1/8"	1/2"	24"
x53	11 3/4"	12"	7/16"	24"
HP 10x57	10"	10 1/4"	9/16"	24"
x42	9 3/4"	10 1/8"	7/16"	24"
HP 8x36	8"	8 1/8"	7/16"	18"

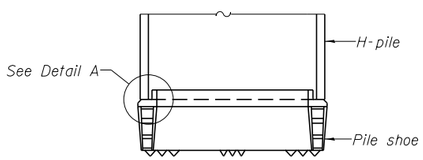

ELEVATION

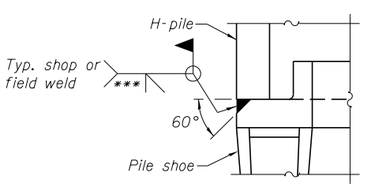

DETAIL A

H-PILE SHOE ATTACHMENT

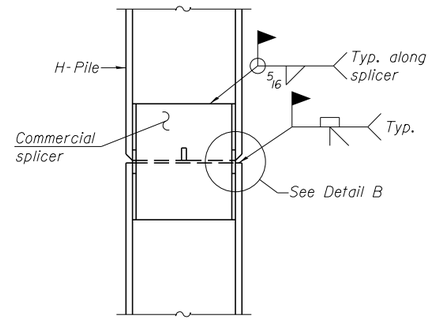

ELEVATION

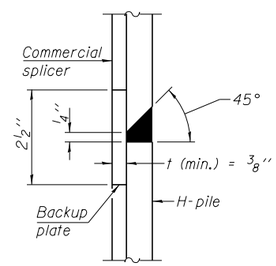

DETAIL "B"

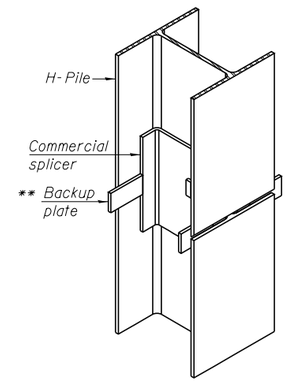

ISOMETRIC VIEW

WELDED COMMERCIAL SPLICE

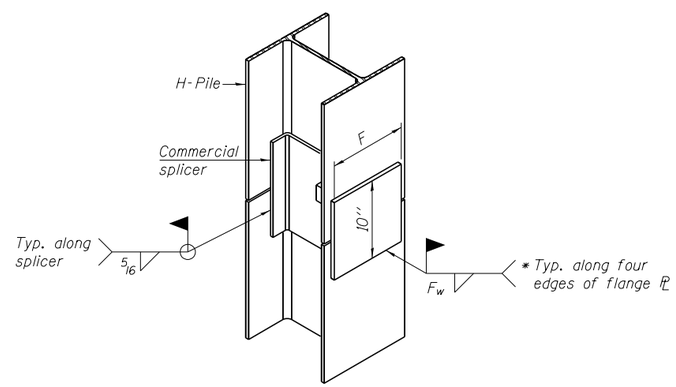

ISOMETRIC VIEW

WELDED COMMERCIAL SPLICE ALTERNATE

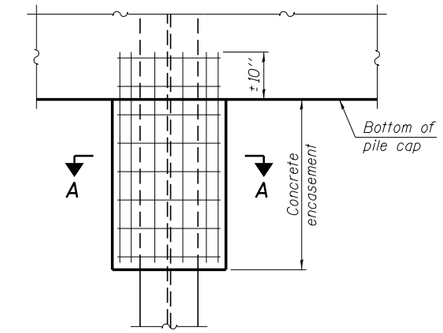

ELEVATION

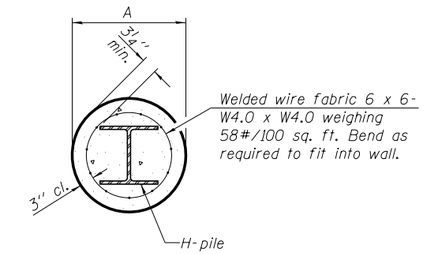

Note:
Forms for encasement may be omitted when soil conditions permit.

SECTION A-A

PILE ENCASEMENT

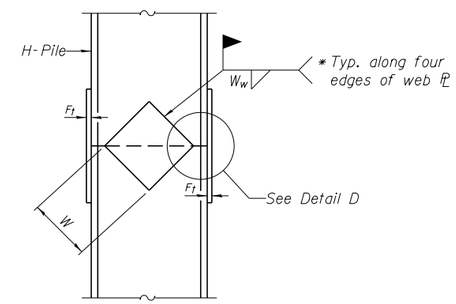

ELEVATION

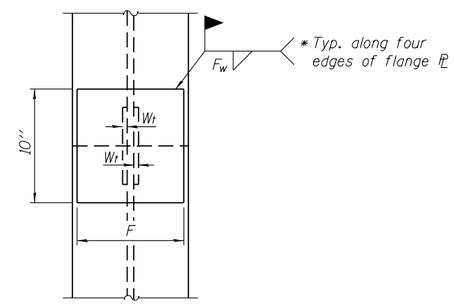

END VIEW

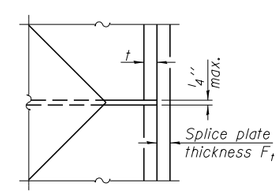

DETAIL D

Designation	F	F_t	F_w	W	W_t	W_w
HP 14x117	12 1/2"	1"	7/8"	7 3/4"	5/8"	1/2"
x102	12 1/2"	7/8"	3/4"	7 3/4"	5/8"	1/2"
x89	12 1/2"	3/4"	11/16"	7 3/4"	5/8"	1/2"
x73	12 1/2"	5/8"	9/16"	7 3/4"	5/8"	1/2"
HP 12x84	10"	7/8"	11/16"	6 1/2"	5/8"	1/2"
x74	10"	7/8"	11/16"	6 1/2"	5/8"	1/2"
x63	10"	5/8"	1/2"	6 1/2"	1/2"	3/8"
x53	10"	5/8"	1/2"	6 1/2"	1/2"	3/8"
HP 10x57	8"	3/4"	9/16"	5 1/4"	1/2"	3/8"
x42	8"	5/8"	9/16"	5 1/4"	1/2"	3/8"
HP 8x36	7"	5/8"	7/16"	4 1/4"	1/2"	3/8"

WELDED PLATE FIELD SPLICE

F-HP 1-27-12

* Interrupt welds 1/4" from end of web and/or each flange.

** Remove portions of backup plates that extend outside the flanges.

*** Weld size per pile shoe manufacturer (5/16" min.).

Note:
The steel H-piles shall be according to AASHTO M270 Grade 50.

benesch
engineers · scientists · planners
Alfred Benesch & Company
205 North Michigan Avenue, Suite 2400
Chicago, Illinois 60601
312-565-0450 Job No. 10056

FILE NAME = 0900169_68620_43_pile.dgn	USER NAME = mbecker	DESIGNED - MFB	REVISED -
		CHECKED - MRB	REVISED -
	PLOT SCALE =	DRAWN - PRT/LLR	REVISED -
	PLOT DATE = 7/16/2012	CHECKED - MRB	REVISED -

STATE OF ILLINOIS
DEPARTMENT OF TRANSPORTATION

HP PILE DETAILS
STRUCTURE NO. 090-0169

SHEET NO. SC43 OF SC63 SHEETS

F.A.I. RTE.	SECTION	COUNTY	TOTAL SHEETS	SHEET NO.
74	90-(14R;(14HB-4,14,14HVB)BR)	TAZEWELL	2433	2019
		CONTRACT NO. 68620		
	ILLINOIS FED. AID PROJECT			

7/16/2012 11:19:50 AM x:\10000s\10056\engineering_documents_phase_ii\174over_Jackson\Final\0900169_68620_43_pile.dgn

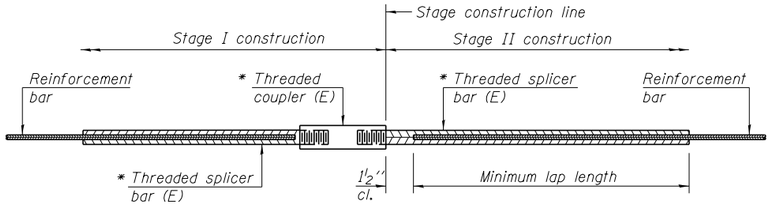

STANDARD BAR SPLICER ASSEMBLY

Minimum Lap Lengths						
Bar size to be spliced	Table 1	Table 2	Table 3	Table 4	Table 5	Table 6
3, 4	1'-5"	1'-11"	2'-1"	2'-4"	2'-7"	2'-11"
5	1'-9"	2'-5"	2'-7"	2'-11"	3'-3"	3'-8"
6	2'-1"	2'-11"	3'-1"	3'-6"	3'-10"	4'-5"
7	2'-9"	3'-10"	4'-2"	4'-8"	5'-2"	5'-10"
8	3'-8"	5'-1"	5'-5"	6'-2"	6'-9"	7'-8"
9	4'-7"	6'-5"	6'-10"	7'-9"	8'-7"	9'-8"

Table 1: Black bar, 0.8 Class C
Table 2: Black bar, Top bar lap, 0.8 Class C
Table 3: Epoxy bar, 0.8 Class C
Table 4: Epoxy bar, Top bar lap, 0.8 Class C
Table 5: Epoxy bar, Class C
Table 6: Epoxy bar, Top bar top, Class C

Threaded splicer bar length = min. lap length + 1½" + thread length

* Epoxy not required on Bar Splicer Assembly components used in conjunction with black bars.

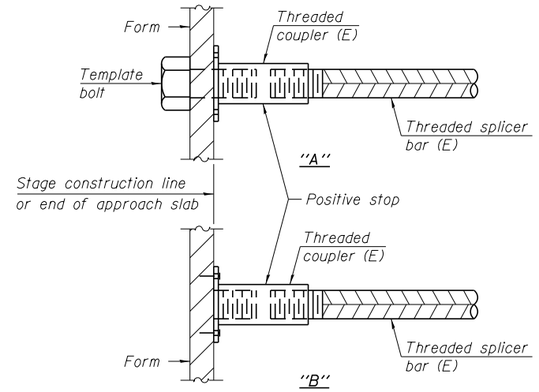

INSTALLATION AND SETTING METHODS

"A" : Set bar splicer assembly by means of a template bolt.
"B" : Set bar splicer assembly by nailing to wood forms or cementing to steel forms.
(E) : Indicates epoxy coating.

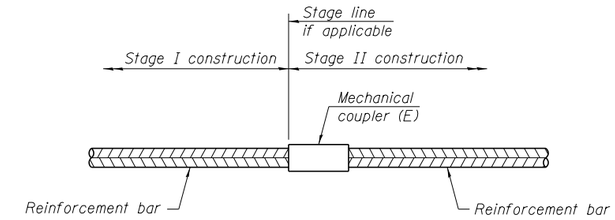

STANDARD MECHANICAL SPLICER

Location	Bar size	No. assemblies required
W. Diaphragm	#6	8
E. Diaphragm	#6	8
Pier Crashwall	#6	120

Location	Bar size	No. assemblies required	Table for minimum lap length
Pier	#6	70	Table 5
Pier	#9	34	Table 5
Deck	#6	8	Table 5
Deck	#5	2,386	Table 5
W. Diaphragm	#6	10	Table 5
E. Diaphragm	#6	10	Table 5

Location	Bar size	No. assemblies required	Table for minimum lap length
W. Appr. Slab	#4	50	Table 5
W. Appr. Slab	#5	172	Table 5
E. Appr. Slab	#4	50	Table 5
E. Appr. Slab	#5	172	Table 5
W. Abutment	#5	12	Table 5
W. Abutment	#7	16	Table 5
E. Abutment	#5	12	Table 5
E. Abutment	#7	16	Table 5

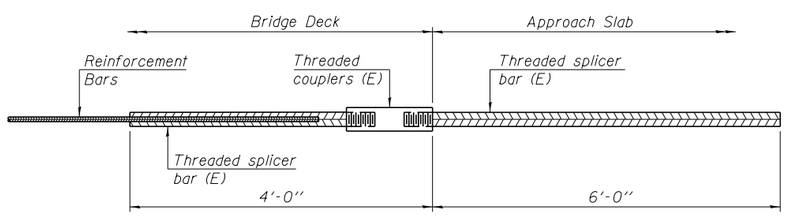

BAR SPLICER ASSEMBLY FOR #5 BAR ON INTEGRAL OR SEMI-INTEGRAL ABUTMENTS

No. required =

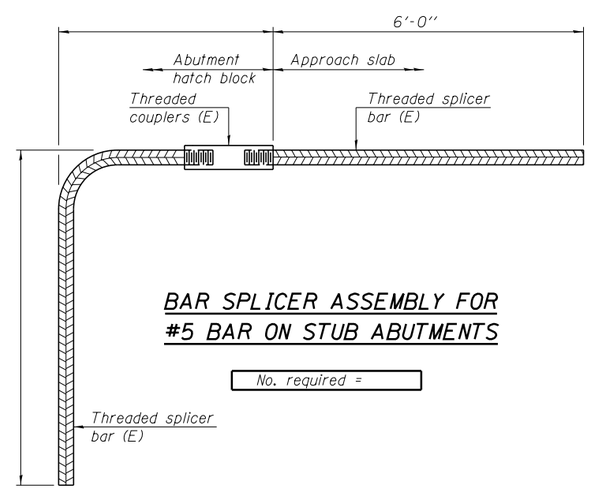

BAR SPLICER ASSEMBLY FOR #5 BAR ON STUB ABUTMENTS

No. required =

NOTES

Splicer bars shall be deformed with threaded ends and have a minimum 60 ksi yield strength.

All reinforcement shall be lapped and tied to the splicer bars.

Bar splicer assemblies shall be epoxy coated according to the requirements for reinforcement bars. See Section 508 of the Standard Specifications.

See approved list of bar splicer assemblies and mechanical splicers for alternatives.

BSD-1 1-27-12

benesch engineers · scientists · planners
Alfred Benesch & Company
205 North Michigan Avenue, Suite 2400
Chicago, Illinois 60601
312-565-0450 Job No. 10056

FILE NAME = 0900169_68620_44_brsplc.dgn	USER NAME = mbecker	DESIGNED - MFB	REVISED -
		CHECKED - MRB	REVISED -
	PLOT SCALE =	DRAWN - PRT/LLR	REVISED -
	PLOT DATE = 7/16/2012	CHECKED - MRB	REVISED -

STATE OF ILLINOIS
DEPARTMENT OF TRANSPORTATION

BAR SPLICER ASSEMBLY DETAILS
STRUCTURE NO. 090-0169
SHEET NO. SC44 OF SC63 SHEETS

F.A.I. RTE.	SECTION	COUNTY	TOTAL SHEETS	SHEET NO.
74	90-(14R;(14HB-4,14,14HVB)BR)	TAZEWELL	2433	2020
		CONTRACT NO. 68620		
	ILLINOIS FED. AID PROJECT			

x:\10000s\10056\engineering_documents_phase_ii\74over_Jackson\Final\0900169_68620_44_brsplc.dgn 11:19:50 AM 7/16/2012

Illinois Department of Transportation
Division of Highways
IDOT

SOIL BORING LOG

Date 8/29/96

ROUTE FAI 74 (I-74) DESCRIPTION I-74 over US 150 & abandoned IT RR LOGGED BY D.Reents

SECTION (90-14)R LOCATION Morton, IL, **SEC.** 17, **TWP.** 25N, **RNG.** 3W, 3rd **PM**,
Latitude 40° 37' 18.37655"N, **Longitude** 89° 28' 27.85329" W

COUNTY Tazewell DRILLING METHOD HSA HAMMER TYPE Automatic

STRUCT. NO. EX 090-0017(WB) EX 090-0018(EB)
Station 568+65.40 on CL

BORING NO. 15
Station 567+67.0
Offset 0ft on CL
Ground Surface Elev. 720.64 ft

Surface Water Elev. NA ft
Stream Bed Elev. NA ft

Groundwater Elev.:
First Encounter 707.1 ft ▼
Upon Completion * ft
After 72 **Hrs.** 715.1 ft ▽

Description	DEPTH (ft)	BLOWS (/6")	UCS Qu (tsf)	MOIST (%)
Brown w/ some Gray SILTY CLAY LOAM		1		
		2		
Clay Loam at 2.5 ft		4 3	0.7 S	17
	716.64			
Gray w/ some Brown SILTY CLAY		2		
	-5 ▽	2 3	1.1 B	29
	714.14			
Gray and Brown SILTY CLAY LOAM		1		
		2 2	0.7 B	26
	711.64			
Brown w/ some Gray SILTY CLAY LOAM		1		
	-10	1 2	<0.25 P	34
Trace water at 10 ft.	710.14			
	709.14			
Brown SILTY LOAM/SILTY CLAY LOAM		1		
		2 2	0.1 B	24
Trace Sand at 13 ft. Free water at 13.5 ft	706.64			
Gray CLAY LOAM Till		1		
	-15	2 3	1.1 B	16
		1		
		3 6	1.3 B	15
After 24 Hrs., Groundwater Depth at 18 ft.				
		2		
	-20	6	2.3	13

Description	DEPTH (ft)	BLOWS (/6")	UCS Qu (tsf)	MOIST (%)
Gray CLAY LOAM Till *(continued)*		9	B	
		2		
		5 9	2.3 B	13
		3		
	-25	6 9	2.5 B	13
		3		
		5 9	2.5 B	13
		3		
	-30	4 6	1.6 B	14
		3		
		4 7	1.7 B	13
		4		
	-35	5 6	1.7 B	14
		3		
		3 9	1.6 B	13
		3		
	-40	5	2.3	13

The Unconfined Compressive Strength (UCS) Failure Mode is indicated by (B-Bulge, S-Shear, P-Penetrometer)
The SPT (N value) is the sum of the last two blow values in each sampling zone (AASHTO T206)

BBS, form 137 (Rev. 8-99)

A.4

Illinois Department of Transportation
Division of Highways
IDOT

SOIL BORING LOG

Date 8/29/96

ROUTE FAI 74 (I-74) DESCRIPTION I-74 over US 150 & abandoned IT RR LOGGED BY D.Reents

SECTION (90-14)R LOCATION Morton, IL, **SEC.** 17, **TWP.** 25N, **RNG.** 3W, 3rd **PM**,
Latitude 40° 37' 18.37655"N, **Longitude** 89° 28' 27.85329" W

COUNTY Tazewell DRILLING METHOD HSA HAMMER TYPE Automatic

STRUCT. NO. EX 090-0017(WB) EX 090-0018(EB)
Station 568+65.40 on CL

BORING NO. 15
Station 567+67.0
Offset 0ft on CL
Ground Surface Elev. 720.64 ft

Surface Water Elev. NA ft
Stream Bed Elev. NA ft

Groundwater Elev.:
First Encounter 707.1 ft ▼
Upon Completion * ft
After 72 **Hrs.** 715.1 ft ▽

Description	DEPTH (ft)	BLOWS (/6")	UCS Qu (tsf)	MOIST (%)
Gray CLAY LOAM Till *(continued)*		7	B	
		3		
		5 9	2.5 B	14
		2		
	-45	5 8	2.0 B	13
		2		
		4 8	2.1 S	14
		3		
	-50	5 7	2.1 B	14
		3		
		5 7	2.1 B	14
		3		
	-55	5 9	2.3 B	13
		3		
		5 7	1.8 B	13
Boulder at 58.5 ft.		3		
	-60	7	2.3	13

Description	DEPTH (ft)	BLOWS (/6")	UCS Qu (tsf)	MOIST (%)
Gray CLAY LOAM Till *(continued)*		9	B	
		4		
		10 11	2.5 B	13
Blow count on a rock				
		5		
	-65	8 15	2.7 B	12
		4		
		7 10	2.7 B	12
		4		
	-70	8 11	2.7 B	12
		3		
		8 9	2.5 B	12
		5		
	-75	9 14	2.9 B	12
		7		
		8 12	2.7 B	13
		6		
	-80	8	2.9	13

The Unconfined Compressive Strength (UCS) Failure Mode is indicated by (B-Bulge, S-Shear, P-Penetrometer)
The SPT (N value) is the sum of the last two blow values in each sampling zone (AASHTO T206)

BBS, form 137 (Rev. 8-99)

A.5

Illinois Department of Transportation
Division of Highways
IDOT

SOIL BORING LOG

Date 8/29/96

ROUTE FAI 74 (I-74) DESCRIPTION I-74 over US 150 & abandoned IT RR LOGGED BY D.Reents

SECTION (90-14)R LOCATION Morton, IL, **SEC.** 17, **TWP.** 25N, **RNG.** 3W, 3rd **PM**,
Latitude 40° 37' 18.37655"N, **Longitude** 89° 28' 27.85329" W

COUNTY Tazewell DRILLING METHOD HSA HAMMER TYPE Automatic

STRUCT. NO. EX 090-0017(WB) EX 090-0018(EB)
Station 568+65.40 on CL

BORING NO. 15
Station 567+67.0
Offset 0ft on CL
Ground Surface Elev. 720.64 ft

Surface Water Elev. NA ft
Stream Bed Elev. NA ft

Groundwater Elev.:
First Encounter 707.1 ft ▼
Upon Completion * ft
After 72 **Hrs.** 715.1 ft ▽

Description	DEPTH (ft)	BLOWS (/6")	UCS Qu (tsf)	MOIST (%)
Gray CLAY LOAM Till *(continued)*		11	B	
		5		
		9 12	2.9 B	13
		4		
	-85	7 10	2.6 S	12
	635.14			
* Unobtainable due to muddy conditions. End of Boring				
	-90			
	-95			
	-100			

The Unconfined Compressive Strength (UCS) Failure Mode is indicated by (B-Bulge, S-Shear, P-Penetrometer)
The SPT (N value) is the sum of the last two blow values in each sampling zone (AASHTO T206)

BBS, form 137 (Rev. 8-99)

A.6

benesch
engineers · scientists · planners

Alfred Benesch & Company
205 North Michigan Avenue, Suite 2400
Chicago, Illinois 60601
312-565-0450 Job No. 10056

FILE NAME = 0900169_68620_45_log1.dgn	USER NAME = mbecker	DESIGNED - MFB	REVISED -
		CHECKED - MRB	REVISED -
	PLOT SCALE =	DRAWN - PRT	REVISED -
	PLOT DATE = 7/16/2012	CHECKED - MRB	REVISED -

STATE OF ILLINOIS
DEPARTMENT OF TRANSPORTATION

SOIL BORING LOGS 1 OF 5
STRUCTURE NO. 090-0169

SHEET NO. SC45 OF SC63 SHEETS

F.A.I. RTE.	SECTION	COUNTY	TOTAL SHEETS	SHEET NO.
74	90-(14R;(14HB-4,14,14HVB)BR)	TAZEWELL	2433	2021

CONTRACT NO. 68620

ILLINOIS FED. AID PROJECT

7/16/2012 11:19:51 AM x:\10000s\10056\engineering_documents_phase_ii\I74overJackson\Final\0900169_68620_45_log1.dgn

Illinois Department of Transportation
Division of Highways
IDOT

SOIL BORING LOG

Date 9/3/96

ROUTE FAI 74 (I-74) DESCRIPTION I-74 over US 150 & abandoned IT RR LOGGED BY D.Reents

SECTION (90-14)R LOCATION Morton, IL, **SEC.** 17, **TWP.** 25N, **RNG.** 3W, 3rd **PM**,
Latitude 40° 37' 18.98615" N, **Longitude** 89° 28' 27.01091" W

COUNTY Tazewell DRILLING METHOD HSA HAMMER TYPE Automatic

STRUCT. NO. EX 090-0017(WB) EX 090-0018(EB)
Station 568+65.40 on CL

BORING NO. 16
Station 568+39.0
Offset 53.1ft LT
Ground Surface Elev. 718.27 ft

Surface Water Elev. NA ft
Stream Bed Elev. NA ft

Groundwater Elev.:
First Encounter 707.3 ft ▼
Upon Completion * ft
After 24 **Hrs.** 712.8 ft ▽

Description	DEPTH (ft)	BLOWS (/6")	UCS Qu (tsf)	MOIST (%)
Gray and Brown SILTY CLAY				
		2		
		3	1.0	26
		3	S	
	-5	2		
	▽	2	0.5	33
		2	B	
		1		
		1	0.6	24
		3	B	
708.77				
Brown/Gray SILTY CLAY LOAM/SILTY CLAY	-10	2		
		2	0.4	22
	▼	2	B	
Trace water at 11 ft.				
706.27				
Gray CLAY LOAM Till		2		
Trace sand & water at 12 ft.		4	1.2	16
		2	B	
	-15	2		
		3	1.3	16
		5	B	
		2		
		5	2.9	13
		7	B	
	-20	2		

Description	DEPTH (ft)	BLOWS (/6")	UCS Qu (tsf)	MOIST (%)
Gray CLAY LOAM Till *(continued)*		4	2.4	13
		6	S	
		3		
		4	2.1	14
		8	B	
	-25	4		
		5	2.3	16
		8	B	
		2		
		6	3.1	13
		8	B	
	-30	3		
		4	2.7	13
		7	B	
		3		
		5	2.5	13
		8	B	
	-35	2		
		5	2.3	13
		8	B	
		2		
		4	2.3	14
		6	B	
	-40	3		

The Unconfined Compressive Strength (UCS) Failure Mode is indicated by (B-Bulge, S-Shear, P-Penetrometer)
The SPT (N value) is the sum of the last two blow values in each sampling zone (AASHTO T206)

BBS, form 137 (Rev. 8-99)

A.7

Illinois Department of Transportation
Division of Highways
IDOT

SOIL BORING LOG

Date 9/3/96

ROUTE FAI 74 (I-74) DESCRIPTION I-74 over US 150 & abandoned IT RR LOGGED BY D.Reents

SECTION (90-14)R LOCATION Morton, IL, **SEC.** 17, **TWP.** 25N, **RNG.** 3W, 3rd **PM**,
Latitude 40° 37' 18.98615" N, **Longitude** 89° 28' 27.01091" W

COUNTY Tazewell DRILLING METHOD HSA HAMMER TYPE Automatic

STRUCT. NO. EX 090-0017(WB) EX 090-0018(EB)
Station 568+65.40 on CL

BORING NO. 16
Station 568+39.0
Offset 53.1ft LT
Ground Surface Elev. 718.27 ft

Surface Water Elev. NA ft
Stream Bed Elev. NA ft

Groundwater Elev.:
First Encounter 707.3 ft ▼
Upon Completion * ft
After 24 **Hrs.** 712.8 ft ▽

Description	DEPTH (ft)	BLOWS (/6")	UCS Qu (tsf)	MOIST (%)
Gray CLAY LOAM Till *(continued)*		4	2.5	13
		7	B	
		2		
		3	1.2	15
		5	B	
	-45	2		
		4	2.1	14
		6	B	
		3		
		6	2.5	14
		7	B	
	-50	2		
		6	2.1	14
		7	B	
		4		
		6	2.5	14
		8	B	
	-55	3		
		5	2.0	13
		8	B	
		3		
		6	2.7	13
		9	B	
	-60	3		

Description	DEPTH (ft)	BLOWS (/6")	UCS Qu (tsf)	MOIST (%)
Gray CLAY LOAM Till *(continued)*		7	2.3	14
		8	B	
		3		
		7	1.6	13
		11	S	
	-65	4		
		8	3.1	12
		12	B	
		3		
		5	2.9	12
		12	B	
	-70	4		
		8	2.7	12
		12	B	
		4		
		7	2.9	12
		11	B	
	-75	3		
		6	2.7	12
		8	B	
		6		
		9	3.3	11
		13	B	
	-80	10		

The Unconfined Compressive Strength (UCS) Failure Mode is indicated by (B-Bulge, S-Shear, P-Penetrometer)
The SPT (N value) is the sum of the last two blow values in each sampling zone (AASHTO T206)

BBS, form 137 (Rev. 8-99)

A.8

Illinois Department of Transportation
Division of Highways
IDOT

SOIL BORING LOG

Date 9/3/96

ROUTE FAI 74 (I-74) DESCRIPTION I-74 over US 150 & abandoned IT RR LOGGED BY D.Reents

SECTION (90-14)R LOCATION Morton, IL, **SEC.** 17, **TWP.** 25N, **RNG.** 3W, 3rd **PM**,
Latitude 40° 37' 18.98615" N, **Longitude** 89° 28' 27.01091" W

COUNTY Tazewell DRILLING METHOD HSA HAMMER TYPE Automatic

STRUCT. NO. EX 090-0017(WB) EX 090-0018(EB)
Station 568+65.40 on CL

BORING NO. 16
Station 568+39.0
Offset 53.1ft LT
Ground Surface Elev. 718.27 ft

Surface Water Elev. NA ft
Stream Bed Elev. NA ft

Groundwater Elev.:
First Encounter 707.3 ft ▼
Upon Completion * ft
After 24 **Hrs.** 712.8 ft ▽

Description	DEPTH (ft)	BLOWS (/6")	UCS Qu (tsf)	MOIST (%)
Gray CLAY LOAM Till *(continued)*		21	4.4	10
		24	S	
636.27				
Gray, Coarse SAND and GRAVEL w/some Clay Loam		11		
		20		10
Natural gas pocket at 82 ft.		40		
	-85	15		
		35		9
		65@5"		
632.27				
* Unobtainable due to muddy conditions. End of Boring				
	-90			
	-95			
	-100			

The Unconfined Compressive Strength (UCS) Failure Mode is indicated by (B-Bulge, S-Shear, P-Penetrometer)
The SPT (N value) is the sum of the last two blow values in each sampling zone (AASHTO T206)

BBS, form 137 (Rev. 8-99)

A.9

benesch
engineers · scientists · planners

Alfred Benesch & Company
205 North Michigan Avenue, Suite 2400
Chicago, Illinois 60601
312-565-0450 Job No. 10056

FILE NAME = 0900169_68620_46_log2.dgn	USER NAME = mbecker	DESIGNED - MFB	REVISED -
		CHECKED - MRB	REVISED -
	PLOT SCALE =	DRAWN - PRT	REVISED -
	PLOT DATE = 7/16/2012	CHECKED - MRB	REVISED -

STATE OF ILLINOIS
DEPARTMENT OF TRANSPORTATION

SOIL BORING LOGS 2 OF 5
STRUCTURE NO. 090-0169
SHEET NO. SC46 OF SC63 SHEETS

F.A.I. RTE.	SECTION	COUNTY	TOTAL SHEETS	SHEET NO.
74	90-(14R;(14HB-4,14,14HVB)BR)	TAZEWELL	2433	2022
		CONTRACT NO. 68620		
	ILLINOIS	FED. AID PROJECT		

7/16/2012 11:20:03 AM x:\10000s\10056\engineering_documents_phase_ii\I74over Jackson\Final\0900169_68620_46_log2.dgn

Illinois Department of Transportation
Division of Highways
IDOT

SOIL BORING LOG

Date 9/4/96

ROUTE FAI 74 (I-74) DESCRIPTION I-74 over US 150 & abandoned IT RR LOGGED BY D.Reents

SECTION (90-14)R LOCATION Morton, IL, **SEC.** 17, **TWP.** 25N, **RNG.** 3W, 3rd **PM**,
Latitude 40° 37' 17.99576" N, **Longitude** 89° 28' 25.77839" W

COUNTY Tazewell DRILLING METHOD HSA HAMMER TYPE Automatic

STRUCT. NO. EX 090-0017(WB) EX 090-0018(EB)
Station 568+65.40 on CL

BORING NO. 17
Station 569+21.5
Offset 57.7ft RT
Ground Surface Elev. 717.73 ft

Surface Water Elev. NA ft
Stream Bed Elev. NA ft

Groundwater Elev.:
First Encounter 709.2 ft ▼
Upon Completion * ft
After 24 **Hrs.** 713.5 ft ▽

Description	DEPTH (ft)	BLOWS (/6")	UCS Qu (tsf)	MOIST (%)
Brown SILTY CLAY LOAM				
		2		
	▽	2		24
	-5	2		
711.73				
Gray and Brown SILTY CLAY		1		
		2	0.7	23
		3	B	
709.23 ▼				
Gray and Brown SILTY CLAY LOAM		2		
		1	0.1	22
2" Sand seam w/ free water at 8.5 ft.	-10	2	B	
706.73				
Gray CLAY LOAM Till		1		
		3	1.5	16
		3	B	
		3		
		4	2.1	13
	-15	6	B	
		2		
		4	2.5	15
		7	B	
		3		
		4	2.1	14
	-20	6	B	
Gray CLAY LOAM Till *(continued)*				
		3		
		4	2.7	13
		7	B	
		2		
		3	2.1	14
	-25	6	B	
		3		
		4	2.7	14
		7	B	
		2		
		4	2.3	17
	-30	6	B	
		4		
		5	2.9	13
		8	B	
		3		
		6	2.3	14
	-35	7	B	
		4		
		6	2.7	13
		8	B	
		3		
		4	2.1	15
	-40	7	B	

The Unconfined Compressive Strength (UCS) Failure Mode is indicated by (B-Bulge, S-Shear, P-Penetrometer)
The SPT (N value) is the sum of the last two blow values in each sampling zone (AASHTO T206)

BBS, form 137 (Rev. 8-99)

Illinois Department of Transportation
Division of Highways
IDOT

SOIL BORING LOG

Date 9/4/96

ROUTE FAI 74 (I-74) DESCRIPTION I-74 over US 150 & abandoned IT RR LOGGED BY D.Reents

SECTION (90-14)R LOCATION Morton, IL, **SEC.** 17, **TWP.** 25N, **RNG.** 3W, 3rd **PM**,
Latitude 40° 37' 17.99576" N, **Longitude** 89° 28' 25.77839" W

COUNTY Tazewell DRILLING METHOD HSA HAMMER TYPE Automatic

STRUCT. NO. EX 090-0017(WB) EX 090-0018(EB)
Station 568+65.40 on CL

BORING NO. 17
Station 569+21.5
Offset 57.7ft RT
Ground Surface Elev. 717.73 ft

Surface Water Elev. NA ft
Stream Bed Elev. NA ft

Groundwater Elev.:
First Encounter 709.2 ft ▼
Upon Completion * ft
After 24 **Hrs.** 713.5 ft ▽

Description	DEPTH (ft)	BLOWS (/6")	UCS Qu (tsf)	MOIST (%)
Gray CLAY LOAM Till *(continued)*				
		3		
		5	2.7	13
		7	B	
		2		
		5	2.5	13
	-45	7	B	
		3		
		6	2.7	13
		8	B	
		3		
		5	2.3	13
	-50	8	B	
		4		
		5	2.5	13
		8	B	
		4		
		5	2.3	13
	-55	8	B	
		3		
		5	2.5	14
		8	B	
		3		
		5	2.3	13
	-60	8	B	
Gray CLAY LOAM Till *(continued)*				
		3		
		5	2.3	13
		7	B	
		4		
		6	2.3	13
	-65	8	B	
		3		
		5	2.5	13
		8	B	
		4		
		7	2.7	12
Large Gravels at 69.5 ft	-70	12	B	
		5		
		7	2.7	11
		9	B	
		6		
		9	2.9	12
	-75	11	B	
		6		
		7	2.7	11
		8	B	
		8		
638.23				
		20	2.9	10
	-80	27	B	4

The Unconfined Compressive Strength (UCS) Failure Mode is indicated by (B-Bulge, S-Shear, P-Penetrometer)
The SPT (N value) is the sum of the last two blow values in each sampling zone (AASHTO T206)

BBS, form 137 (Rev. 8-99)

Illinois Department of Transportation
Division of Highways
IDOT

SOIL BORING LOG

Date 9/4/96

ROUTE FAI 74 (I-74) DESCRIPTION I-74 over US 150 & abandoned IT RR LOGGED BY D.Reents

SECTION (90-14)R LOCATION Morton, IL, **SEC.** 17, **TWP.** 25N, **RNG.** 3W, 3rd **PM**,
Latitude 40° 37' 17.99576" N, **Longitude** 89° 28' 25.77839" W

COUNTY Tazewell DRILLING METHOD HSA HAMMER TYPE Automatic

STRUCT. NO. EX 090-0017(WB) EX 090-0018(EB)
Station 568+65.40 on CL

BORING NO. 17
Station 569+21.5
Offset 57.7ft RT
Ground Surface Elev. 717.73 ft

Surface Water Elev. NA ft
Stream Bed Elev. NA ft

Groundwater Elev.:
First Encounter 709.2 ft ▼
Upon Completion * ft
After 24 **Hrs.** 713.5 ft ▽

Description	DEPTH (ft)	BLOWS (/6")	UCS Qu (tsf)	MOIST (%)
Gray Course SAND & GRAVEL. (Natural gas pocket) *(continued)*				
636.73				
Gray SILTY SAND		10		
		12		14
		20		
634.23				
Gray CLAY LOAM w/ fine sand seams		18		
		22	2.9	17
		36	S	
632.73	-85			
* Unobtainable due to muddy conditions. End of Boring				
	-90			
	-95			
	-100			

The Unconfined Compressive Strength (UCS) Failure Mode is indicated by (B-Bulge, S-Shear, P-Penetrometer)
The SPT (N value) is the sum of the last two blow values in each sampling zone (AASHTO T206)

BBS, form 137 (Rev. 8-99)

benesch
engineers · scientists · planners
Alfred Benesch & Company
205 North Michigan Avenue, Suite 2400
Chicago, Illinois 60601
312-565-0450 Job No. 10056

FILE NAME = 0900169_68620_47_log3.dgn	USER NAME = mbecker	DESIGNED - MFB	REVISED -	STATE OF ILLINOIS DEPARTMENT OF TRANSPORTATION	SOIL BORING LOGS 3 OF 5 STRUCTURE NO. 090-0169	F.A.I. RTE.	SECTION	COUNTY	TOTAL SHEETS	SHEET NO.
		CHECKED - MRB	REVISED -			74	90-[14R;(14HB-4,14,14HVB)BR]	TAZEWELL	2433	2023
	PLOT SCALE =	DRAWN - PRT	REVISED -					CONTRACT NO. 68620		
	PLOT DATE = 7/16/2012	CHECKED - MRB	REVISED -		SHEET NO. SC47 OF SC63 SHEETS		ILLINOIS	FED. AID PROJECT		

7/16/2012 11:20:15 AM x:\10000s\10056\engineering_documents_phase_ii\I74over_Jackson\Final\0900169_68620_47_log3.dgn

Illinois Department of Transportation
Division of Highways
IDOT

SOIL BORING LOG

Date 8/30/96

ROUTE FAI 74 (I-74) DESCRIPTION I-74 over US 150 & abandoned IT RR LOGGED BY D.Reents

SECTION (90-14)R LOCATION Morton, IL, **SEC.** 17, **TWP.** 25N, **RNG.** 3W, 3rd **PM**, **Latitude** 40° 37' 18.66989" N, **Longitude** 89° 28' 24.60172" W

COUNTY Tazewell DRILLING METHOD HSA HAMMER TYPE Automatic

STRUCT. NO. EX 090-0017(WB) EX 090-0018(EB)
Station 568+65.40 on CL

BORING NO. 18
Station 570+19.5
Offset 0ft on CL
Ground Surface Elev. 745.70 ft

Surface Water Elev. NA ft
Stream Bed Elev. NA ft

Groundwater Elev.:
First Encounter 710.7 ft ▼
Upon Completion * ft
After 24 Hrs. 713.9 ft ▽

Description	DEPTH (ft)	BLOWS (/6")	UCS Qu (tsf)	MOIST (%)
Gray CLAY LOAM Fill				
		3		12
Brown Coarse SAND Fill - 4"	-5	3	2.0	13
		3	P	
		3		
		4	2.5	12
		5	B	
		2		
CLAY LOAM/ SILTY CLAY LOAM at 10 ft.	-10	2	0.7	14
		3	S	
734.20				
Brown/Gray CLAY LOAM Fill		2		
		3	1.7	15
		3	B	
		2		
	-15	3	2.5	12
		4	B	
729.20				
Gray to Dark Gray w/ trace of Brown SILTY CLAY LOAM Fill		3		
		4	2.1	22
		5	S	
726.70				
Dark Gray w/ trace of Gray SILTY CLAY Fill		2		
	-20	3	1.6	25

Description	DEPTH (ft)	BLOWS (/6")	UCS Qu (tsf)	MOIST (%)
Dark Gray w/ trace of Gray SILTY CLAY Fill *(continued)*		5	B	
724.20				
Gray and Brown CLAY LOAM Fill		3		
		4	2.8	16
		6	S	
721.70				
Brown and Gray CLAY LOAM/SILTY CLAY LOAM Fill		2		
	-25	4	1.4	22
		5	S	
		2		
		4	2.7	17
Trace Sand at 28 ft.		5	S	
716.70				
Gray SILTY CLAY		2		
	-30	4	1.5	25
		5	S	
	▽	1		
		2	1.2	29
		3	B	
711.70				
Brown and Gray SILTY CLAY LOAM		1		
	▼35	2	0.8	20
Trace water at 35 ft.		2	B	
709.20				
Pinkish Brown and Gray SILTY CLAY LOAM		1		
		2	0.6	19
		4	B	
706.70				
Gray CLAY LOAM Till		3		
	-40	3	1.7	15

The Unconfined Compressive Strength (UCS) Failure Mode is indicated by (B-Bulge, S-Shear, P-Penetrometer)
The SPT (N value) is the sum of the last two blow values in each sampling zone (AASHTO T206)

BBS, form 137 (Rev. 8-99)

A.13

Illinois Department of Transportation
Division of Highways
IDOT

SOIL BORING LOG

Date 8/30/96

ROUTE FAI 74 (I-74) DESCRIPTION I-74 over US 150 & abandoned IT RR LOGGED BY D.Reents

SECTION (90-14)R LOCATION Morton, IL, **SEC.** 17, **TWP.** 25N, **RNG.** 3W, 3rd **PM**, **Latitude** 40° 37' 18.66989" N, **Longitude** 89° 28' 24.60172" W

COUNTY Tazewell DRILLING METHOD HSA HAMMER TYPE Automatic

STRUCT. NO. EX 090-0017(WB) EX 090-0018(EB)
Station 568+65.40 on CL

BORING NO. 18
Station 570+19.5
Offset 0ft on CL
Ground Surface Elev. 745.70 ft

Surface Water Elev. NA ft
Stream Bed Elev. NA ft

Groundwater Elev.:
First Encounter 710.7 ft ▼
Upon Completion * ft
After 24 Hrs. 713.9 ft ▽

Description	DEPTH (ft)	BLOWS (/6")	UCS Qu (tsf)	MOIST (%)
Gray CLAY LOAM Till *(continued)*		5	B	
		3		
		5	2.7	13
		6	B	
		4		
	-45	5	2.9	12
		7	B	
		3		
		5	2.3	14
		6	B	
		3		
	-50	5	2.5	13
		7	B	
		3		
		5	2.9	13
		7	B	
		3		
	-55	4	2.3	13
		6	B	
		2		
		4	2.5	13
		6	B	
		3		
	-60	5	2.5	13

Description	DEPTH (ft)	BLOWS (/6")	UCS Qu (tsf)	MOIST (%)
Gray CLAY LOAM Till *(continued)*		7	B	
		3		
		5	2.3	13
		7	B	
		4		
	-65	6	2.5	13
		8	B	
		4		
		5	2.1	13
		7	B	
		4		
	-70	7	2.7	12
		6	B	
		3		
		6	2.9	13
		7	B	
		4		
	-75	5	2.5	13
		8	B	
		3		
		5	2.5	13
		7	B	
		4		
	-80	4	2.7	13

The Unconfined Compressive Strength (UCS) Failure Mode is indicated by (B-Bulge, S-Shear, P-Penetrometer)
The SPT (N value) is the sum of the last two blow values in each sampling zone (AASHTO T206)

BBS, form 137 (Rev. 8-99)

A.14

Illinois Department of Transportation
Division of Highways
IDOT

SOIL BORING LOG

Date 8/30/96

ROUTE FAI 74 (I-74) DESCRIPTION I-74 over US 150 & abandoned IT RR LOGGED BY D.Reents

SECTION (90-14)R LOCATION Morton, IL, **SEC.** 17, **TWP.** 25N, **RNG.** 3W, 3rd **PM**, **Latitude** 40° 37' 18.66989" N, **Longitude** 89° 28' 24.60172" W

COUNTY Tazewell DRILLING METHOD HSA HAMMER TYPE Automatic

STRUCT. NO. EX 090-0017(WB) EX 090-0018(EB)
Station 568+65.40 on CL

BORING NO. 18
Station 570+19.5
Offset 0ft on CL
Ground Surface Elev. 745.70 ft

Surface Water Elev. NA ft
Stream Bed Elev. NA ft

Groundwater Elev.:
First Encounter 710.7 ft ▼
Upon Completion * ft
After 24 Hrs. 713.9 ft ▽

Description	DEPTH (ft)	BLOWS (/6")	UCS Qu (tsf)	MOIST (%)
Gray CLAY LOAM Till *(continued)*		8	B	
		4		
		5	2.7	13
		8	B	
		4		
	-85	4	2.5	13
		7	B	
		3		
		5	2.5	12
		6	B	
657.70				
* Unobtainable due to muddy conditions. End of Boring				
	-90			
	-95			
	-100			

The Unconfined Compressive Strength (UCS) Failure Mode is indicated by (B-Bulge, S-Shear, P-Penetrometer)
The SPT (N value) is the sum of the last two blow values in each sampling zone (AASHTO T206)

BBS, form 137 (Rev. 8-99)

A.15

benesch
engineers · scientists · planners

Alfred Benesch & Company
205 North Michigan Avenue, Suite 2400
Chicago, Illinois 60601
312-565-0450 Job No. 10056

FILE NAME = 0900169_68620_48_log4.dgn	USER NAME = mbecker	DESIGNED - MFB	REVISED -
		CHECKED - MRB	REVISED -
	PLOT SCALE =	DRAWN - PRT	REVISED -
	PLOT DATE = 7/16/2012	CHECKED - MRB	REVISED -

STATE OF ILLINOIS
DEPARTMENT OF TRANSPORTATION

SOIL BORING LOGS 4 OF 5
STRUCTURE NO. 090-0169

SHEET NO. SC48 OF SC63 SHEETS

F.A.I. RTE.	SECTION	COUNTY	TOTAL SHEETS	SHEET NO.
74	90-(14R;(14HB-4,14,14HVB)BR)	TAZEWELL	2433	2024
		CONTRACT NO. 68620		
	ILLINOIS	FED. AID PROJECT		

7/16/2012 11:20:26 AM x:\10000s\10056\engineering-documents_phase_ii\I74over Jackson\Final\0900169_68620_48_log4.dgn

Illinois Department of Transportation
Division of Highways
IDOT

SOIL BORING LOG

Page 1 of 1

Date 7/26/95

ROUTE FAI 74 (I-74) DESCRIPTION I-74 over US 150 & abandoned IT RR LOGGED BY D.Reents

SECTION (90-14)R LOCATION Morton, IL, **SEC.** 17, **TWP.** 25N, **RNG.** 3W, 3rd **PM**,
Latitude 40° 37' 18.44722" N, **Longitude** 89° 28' 27.11998" W

COUNTY Tazewell DRILLING METHOD HSA HAMMER TYPE Automatic

STRUCT. NO. EX 090-0017(WB) EX 090-0018(EB)
Station 568+65.40 on CL

BORING NO. B-1
Station 568+24
Offset 0ft on CL
Ground Surface Elev. 718.70 ft

Surface Water Elev. NA ft
Stream Bed Elev. NA ft

Groundwater Elev.:
First Encounter 706.7 ft ▼
Upon Completion 712.7 ft ▽
After 24 Hrs. 714.7 ft ▽

Description	Elev.	DEPTH (ft)	BLOWS (/6")	UCS Qu (tsf)	MOIST (%)
Dark Brown SILTY CLAY LOAM			3		
			4	2.0	21
			3	S	
	715.70				
Light Gray SILTY CLAY LOAM/SILTY CLAY			3		
			2	0.7	27
			2	B	
		-5			
	713.20				
Light Gray w/ some Light Brown SILTY CLAY LOAM			2		
			1	0.2	26
			2	B	
	710.70				
Light Brown w/ trace of Light Gray SILTY CLAY LOAM			2		
			1	0.4	25
			3	B	
		-10			
	708.20				
Light Brown w/ trace of Light Gray SILTY LOAM w/ Sand seams			1		
			5		18
			9		
Free water at 12'					
	705.70				
Gray CLAY LOAM Till			1		
			3	1.2	16
			5	B	
		-15			
			2		
			5	2.1	14
			7	B	
			3		
			8	2.3	14
			11	B	
		-20			
Gray CLAY LOAM Till *(continued)*			4		
			7	2.3	14
			11	B	
			3		
			6	2.2	14
			14	S	
		-25			
			3		
			7	2.5	13
			12	B	
	691.70				
End of Boring					
		-30			
		-35			
		-40			

The Unconfined Compressive Strength (UCS) Failure Mode is indicated by (B-Bulge, S-Shear, P-Penetrometer)
The SPT (N value) is the sum of the last two blow values in each sampling zone (AASHTO T206)

BBS, form 137 (Rev. 8-99)

A.16

Illinois Department of Transportation
Division of Highways
IDOT

SOIL BORING LOG

Page 1 of 1

Date 7/26/95

ROUTE FAI 74 (I-74) DESCRIPTION I-74 over US 150 & abandoned IT RR LOGGED BY D.Reents

SECTION (90-14)R LOCATION Morton, IL, **SEC.** 17, **TWP.** 25N, **RNG.** 3W, 3rd **PM**,
Latitude 40° 37' 18.44966" N, **Longitude** 89° 28' 27.09424" W

COUNTY Tazewell DRILLING METHOD HSA HAMMER TYPE

STRUCT. NO. EX 090-0017(WB) EX 090-0018(EB)
Station 568+65.40 on CL

BORING NO. B-1S
Station 568+26
Offset 0ft on CL
Ground Surface Elev. 718.50 ft

Surface Water Elev. NA ft
Stream Bed Elev. NA ft

Groundwater Elev.:
First Encounter ft
Upon Completion NA ft
After 24 Hrs. NA ft

Description	Elev.	DEPTH (ft)	BLOWS (/6")	UCS Qu (tsf)	MOIST (%)
Dark Brown SILTY CLAY LOAM					
Tube #1: 0'-2.5', Recovery 1.4 ft.					
	715.50				
Light Gray and Light Brown SILTY CLAY LOAM/SILTY CLAY					
Tube #2: 3'-5.5', Recovery 0.9 ft.					
Tube #2A: 4'-6.5', Recovery 1.8 ft.		-5			
	713.00				
Light Brown SILTY CLAY LOAM					
Tube #3: 5.5'-8', Recovery 2.0 ft.					
	710.50				
Light Brown SILTY LOAM w/Fine SAND					
Tube #4: 8'-10.5', Recovery 2.4 ft.		-10			
	708.00				
Brown SAND and GRAVEL					
Tube #5: 10.5'-13', Recovery 2.3 ft					
	705.50				
Refusal at 12.7 ft. End of Boring					
		-15			
		-20			

The Unconfined Compressive Strength (UCS) Failure Mode is indicated by (B-Bulge, S-Shear, P-Penetrometer)
The SPT (N value) is the sum of the last two blow values in each sampling zone (AASHTO T206)

BBS, form 137 (Rev. 8-99)

A.17

benesch
engineers · scientists · planners

Alfred Benesch & Company
205 North Michigan Avenue, Suite 2400
Chicago, Illinois 60601
312-565-0450 Job No. 10056

FILE NAME =	USER NAME = mbecker	DESIGNED - MFB	REVISED -
		CHECKED - MRB	REVISED -
0900169_68620_49_log5.dgn	PLOT SCALE =	DRAWN - PRT	REVISED -
	PLOT DATE = 7/16/2012	CHECKED - MRB	REVISED -

STATE OF ILLINOIS
DEPARTMENT OF TRANSPORTATION

SOIL BORING LOGS 5 OF 5
STRUCTURE NO. 090–0169
SHEET NO. SC49 OF SC63 SHEETS

F.A.I. RTE.	SECTION	COUNTY	TOTAL SHEETS	SHEET NO.
74	90-[14R;(14HB-4,14,14HVB)BR]	TAZEWELL	2433	2025
		CONTRACT NO. 68620		
		ILLINOIS FED. AID PROJECT		

7/16/2012 11:20:38 AM x:\10000s\10056\engineering_documents_phase_ii\I74over_Jackson\Final\0900169_68620_49_log5.dgn

STATE OF ILLINOIS
DEPARTMENT OF PUBLIC WORKS & BUILDINGS
DIVISION OF HIGHWAYS

ROUTE No.	SEC.	COUNTY	TOTAL SHEETS	SHEET No.
F.A.I. RT. 74	90-14 NYB	TAZEWELL	24	7
	90-14 NHB		8	2
FED. ROAD DIST. No. 7	ILLINOIS	PROJECT I-IG-74-4(36)101		

SHEET 1 OF 15

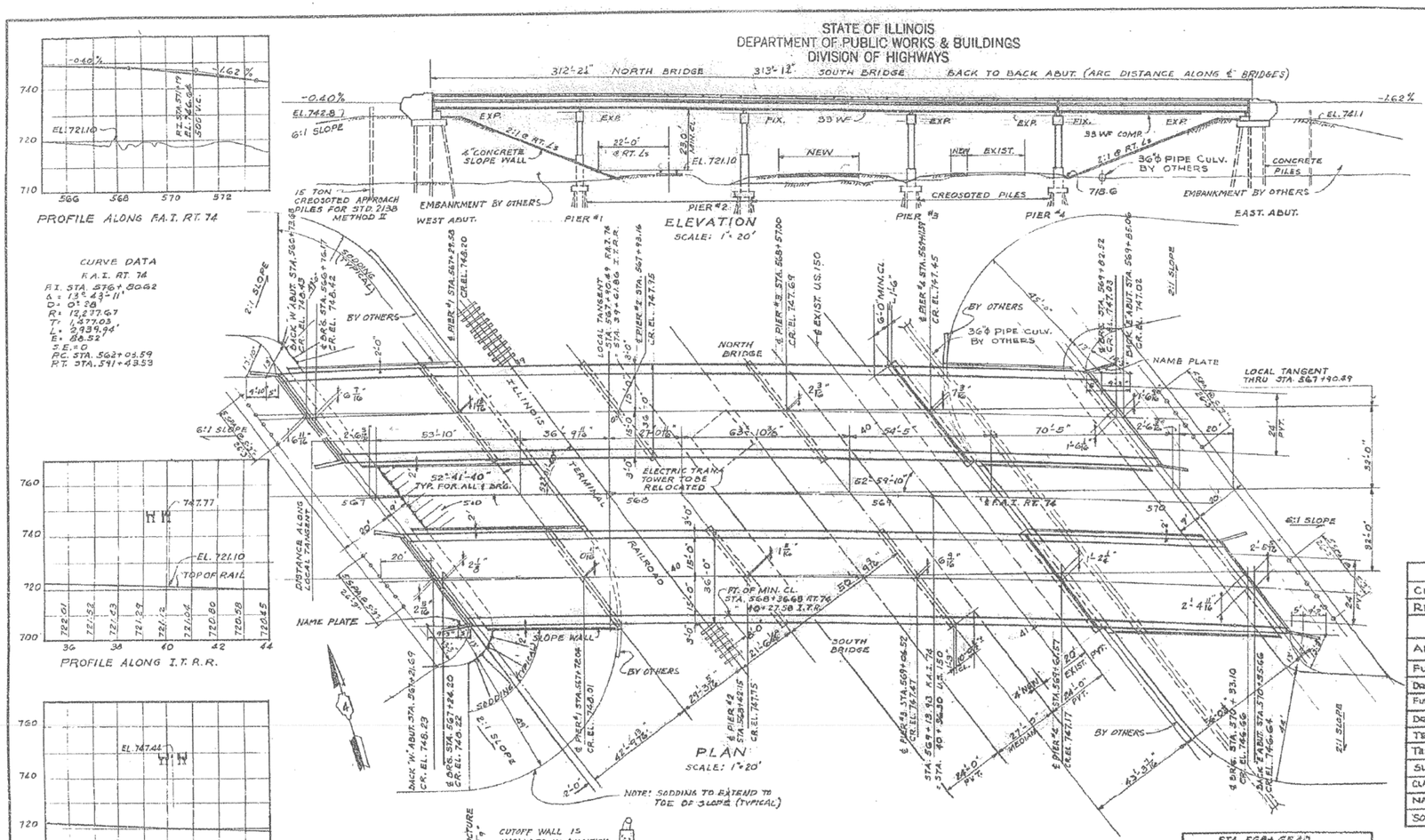

GENERAL NOTES

CLASS "X" CONCRETE SHALL BE USED THROUGHOUT UNLESS OTHERWISE NOTED.

THE CONCRETE FLOOR SLAB SHALL BE FINISHED IN ACCORDANCE WITH ARTICLE 81.10 OF THE STANDARD SPECIFICATIONS AND SHALL BE POURED IN ONE CONTINUOUS OPERATION BETWEEN THE LIMITS OF THE CONSTRUCTION JOINTS SHOWN.

ALL CURBS AND SLABS OUTSIDE OF LONGITUDINAL BONDED CONSTRUCTION JOINTS SHALL BE POURED MONOLITHICALLY.

ALL ROCKERS, BOLSTERS, BEARING PLATES, LEAD PLATES, PINTLES AND ANCHOR BOLTS SHALL BE FABRICATED AND SET IN ACCORDANCE WITH ARTICLE 51.16 OF THE STANDARD SPECIFICATIONS AND ARE INCLUDED IN THE QUANTITIES OF STRUCTURAL STEEL. ESTIMATED WEIGHT 2,339 LBS.

ANCHOR BOLTS SHALL BE SET BEFORE RIVETING DIAPHRAGMS OVER SUPPORTS.

ROADWAY EXPANSION GUARDS SHALL BE ASSEMBLED IN THE SHOP IN THE PROPER POSITION WITH THE ADJACENT ENDS IN PLACE AND SHALL BE LEFT ASSEMBLED FOR SHOP INSPECTION.

EXPANSION GUARDS SHALL BE FABRICATED AND ERECTED IN ACCORDANCE WITH ARTICLE 51.13 (d) OF THE STANDARD SPECIFICATIONS AND ARE INCLUDED IN QUANTITIES OF STRUCTURAL STEEL.

EXCEPT AS OTHERWISE NOTED, ALL STRUCTURAL STEEL SHALL RECEIVE ONE SHOP COAT OF RED LEAD PAINT AND TWO FIELD COATS OF ALUMINUM PAINT. SEE ARTICLES 56.1 TO 56.6 OF THE STANDARD SPECIFICATIONS. ALL PAINT SHALL BE FURNISHED AND APPLIED BY THE CONTRACTOR.

THE CONTRACTOR SHALL DRIVE TWO REINFORCED CONCRETE TEST PILES AT PERMANENT LOCATIONS, ONE IN WEST ABUTMENT RIGHT AND ONE IN EAST ABUTMENT LEFT, AS DIRECTED BY THE ENGINEER BEFORE CASTING THE REMAINDER OF THE PILES.

THE CONTRACTOR SHALL DRIVE TWO TIMBER TESTS PILES, ONE IN PIER NO. 1 LEFT AND ONE IN PIER NO. 3 RIGHT AS DIRECTED BY THE ENGINEER BEFORE ORDERING THE REMAINDER OF THE PILES.

UNLESS OTHERWISE SHOWN ON THE PLANS, REINFORCEMENT BARS SHALL BE LAPPED 20 BAR DIAMETERS.

ALL THE BEARS AND COVER PLATES SHALL CONFORM TO A.S.T.M. DESIGNATION A 373, STRUCTURAL STEEL FOR WELDING

ALL ADJUSTMENT PILES SHALL BE DRIVEN IN HOLES (DIA. OF PILE + 4" IN) DRILLED THRU THE ENTIRE DEPTH OF FILL SO THAT PILES ARE DRIVEN INTO NATURAL GROUND.

COARSE AGGREGATE WHICH IS TO BE USED IN PARAPET AND END POSTS MUST BE ABSOLUTELY FREE OF CHERT, FLINT, LIMONITE, LIGNITE, AND SOFT SANDSTONE.

TOTAL BILL OF MATERIAL (SEC. 90-14 NYB)

ITEM		SUPERSTR.	SUBSTR.	TOTAL
CLASS "X" CONCRETE	CU. YDS.	687.4	863.7	1551.3
REINFORCEMENT BARS	LBS.	134,170	81,760	215,930
ERECTING STRUCTURAL STEEL	LBS.	662,850	—	662,850
ALUMINUM HANDRAIL	LIN. FT.	1240	—	1240
FURNISHING CONCRETE PILES	LIN. FT.	—	2500	2500
DRIVING CONCRETE PILES	LIN. FT.	—	2500	2500
FURNISHING CREOSOTED PILES (201-30)	LIN. FT.	—	5262	5262
DRIVING TIMBER PILES	LIN. FT.	—	5262	5262
TEST PILES (CONCRETE)	EA.	—	2	2
TEST PILES (TIMBER)	EA.	—	2	2
SLOPE WALL, 4-INCH	SQ. YDS.	1,280	—	1,280
CLASS "A" EXCAVATION FOR STRUCT.	CU. YDS.	—	555	555
NAME PLATE	EA.	2	—	2
SODDING	SQ. YDS.	—	—	2552

TOTAL BILL OF MATERIAL (SEC. 90-14 NYB)

ITEM		SUPERSTR.	SUBSTR.	TOTAL
FURNISHING STRUCTURAL STEEL	LBS.	662,850	—	662,850

090-0017 & 090-0018

GENERAL PLAN & ELEVATION

F.A.I. ROUTE 74 SECTION 90-14 NYB

PROJECT I-IG-74-4(36)101

F.A.I. ROUTE 74 OVER I.T.R.R. & S.B.I. ROUTE 121

STATION 568+65.40

TAZEWELL COUNTY

WARREN AND VAN PRAAG, INC.
CONSULTING ENGINEERS - DECATUR, ILLINOIS

DESIGNED	H.Y.F.
CHECKED	P.H.M.
DRAWN	H.Y.F.
CHECKED	P.H.M.

EXAMINED — ENGINEER OF BRIDGES AND TRAFFIC STRUCTURES
PASSED — ENGINEER OF DESIGN
APPROVED — CHIEF HIGHWAY ENGINEER

FOR INFORMATION ONLY

benesch
engineers · scientists · planners
Alfred Benesch & Company
205 North Michigan Avenue, Suite 2400
Chicago, Illinois 60601
312-565-0450 Job No. 10056

FILE NAME = 0900169_68620_50_exist1.dgn	USER NAME = mbecker	DESIGNED - MFB	REVISED -
		CHECKED - MRB	REVISED -
	PLOT SCALE =	DRAWN - PRT/LLR	REVISED -
	PLOT DATE = 7/16/2012	CHECKED - MRB	REVISED -

STATE OF ILLINOIS
DEPARTMENT OF TRANSPORTATION

EXISTING PLANS
STRUCTURE NO. 090-0169
SHEET NO. SC50 OF SC63 SHEETS

F.A.I. RTE.	SECTION	COUNTY	TOTAL SHEETS	SHEET NO.
74	90-(14R;(14HB-4,14,14HVB)BR)	TAZEWELL	2433	2026
		CONTRACT NO. 68620		
		ILLINOIS FED. AID PROJECT		

7/16/2012 11:20:45 AM x:\10000s\10056\engineering_documents_phase_ii\74over_Jackson\Final\0900169_68620_50_exist1.dgn

STATE OF ILLINOIS
DEPARTMENT OF PUBLIC WORKS & BUILDINGS
DIVISION OF HIGHWAYS

ROUTE No.	SEC.	COUNTY	TOTAL SHEETS	SHEET No.
F.A.I. RT. 74	90-14 NVB	TAZEWELL	24	8
FED. ROAD DIST. No. 7	ILLINOIS 1	PROJECT		

SH 2 OF 3

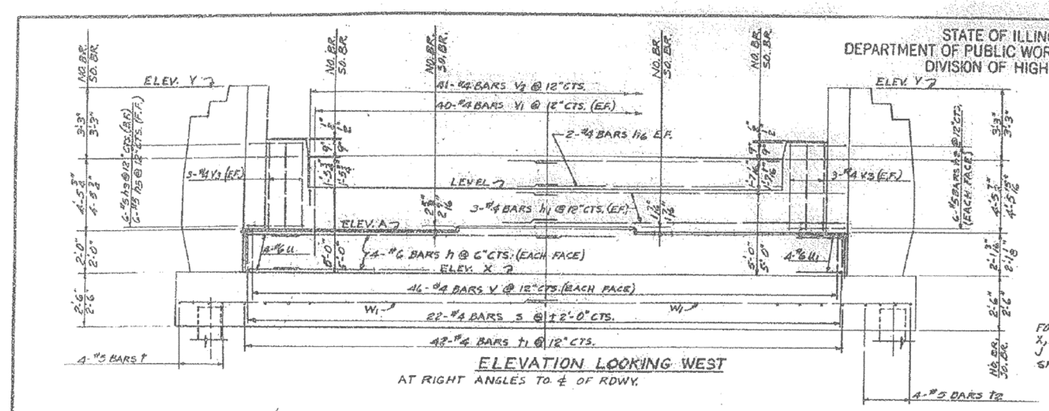

FOR ELEVATIONS A, X, & Y & DIMENSION J SEE TABLE ON SH. #4

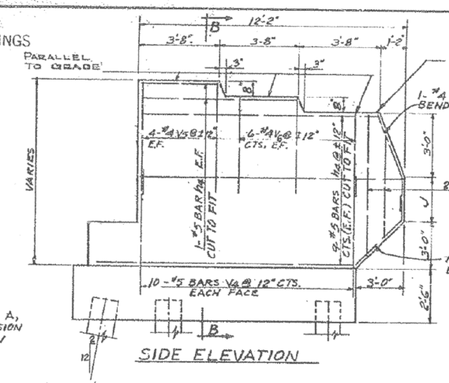

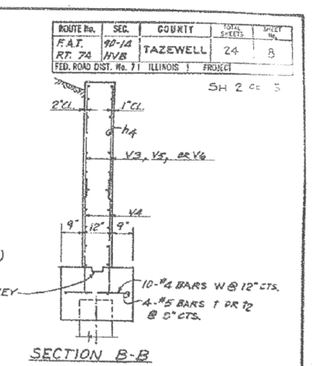

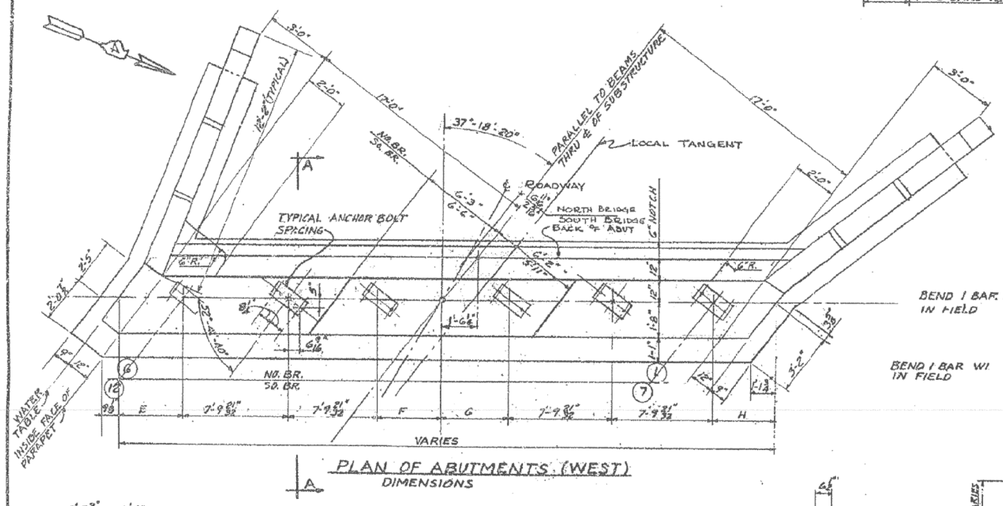

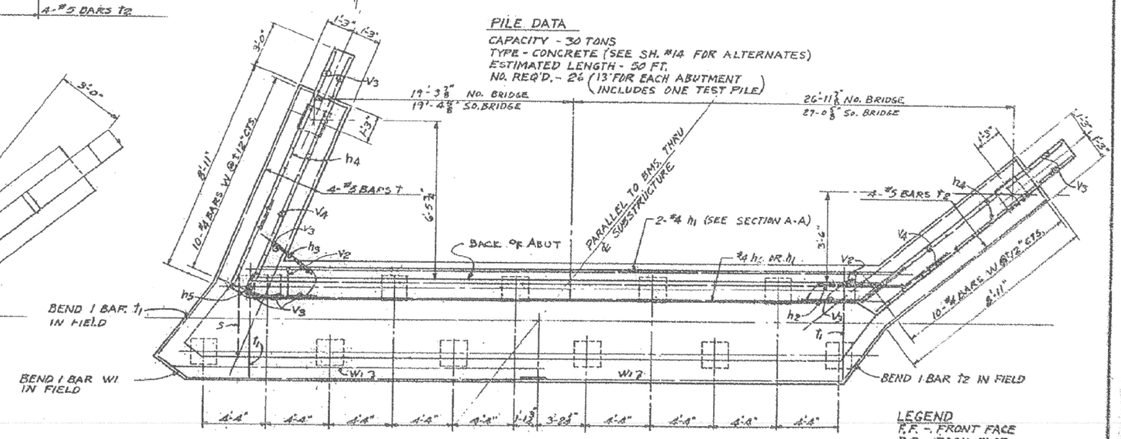

PLAN OF ABUTMENT
REINFORCEMENT & PILE SPACING

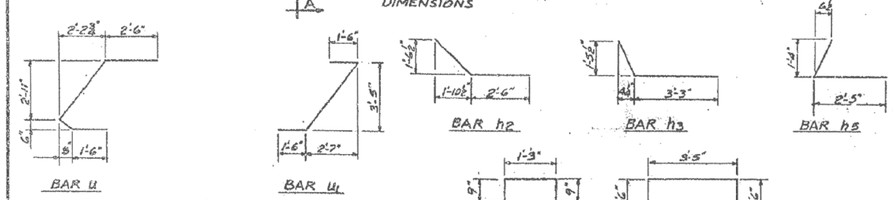

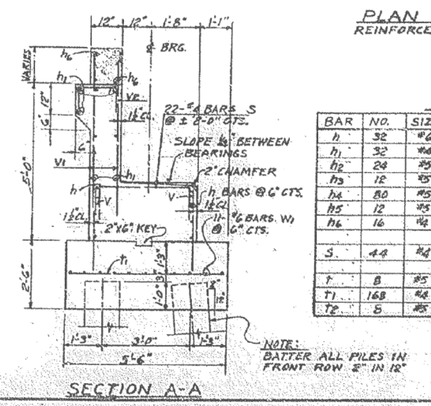

BILL OF REINFORCEMENT (2 ABUTMENTS)

BAR	NO.	SIZE	LENGTH	SHAPE	BAR	NO.	SIZE	LENGTH	SHAPE
h	32	#6	23'-3"		U	8	#6	8'-6"	
h1	32	#6	22'-0"		U1	8	#6	7'-4"	
h2	24	#5	5'-0"						
h3	12	#5	4'-9"		V	184	#4	3'-0"	
h4	80	#5	11'-10"		V1	160	#4	3'-6"	
h5	12	#5	3'-11"		V2	82	#4	2'-9"	
h6	16	#4	20'-0"		V3	56	#4	3'-0"	
					V4	80	#5	6'-6"	
S	44	#4	6'-3"		V5	32	#4	3'-7"	
					V6	48	#5	4'-10"	
t	8	#5	11'-10"						
t1	168	#4	5'-3"		W	48	#6	2'-3"	
t2	8	#5	13'-0"		W1	48	#6	24'-3"	

BILL OF MATERIAL (2 ABUTMENTS)

ITEM	UNIT	QUANTITY
CLASS "X" CONCRETE	CU. YDS.	116.7
REINFORCEMENT BARS	LBS.	7970
CONCRETE PILES	L.F.	1250
CONCRETE TEST PILES	EA.	1

WEST ABUTMENTS
F.A.I. ROUTE 74 SECTION 90-14 NVB

F.A.I. RT. 74 OVER I.T. R.R. & S.B.I. RT. 121
STATION 388 + 85.40
TAZEWELL COUNTY

WARREN AND VAN PRAAG, INC.
CONSULTING ENGINEERS • DECATUR, ILLINOIS

DESIGNED	H.J.K.
CHECKED	R.H.M.
DRAWN	H.J.K.
CHECKED	R.H.M.

EXAMINED
ENGINEER OF BRIDGES AND TRAFFIC STRUCTURES
PASSED
ENGINEER OF BRIDGES
APPROVED
CHIEF HIGHWAY ENGINEER

FOR INFORMATION ONLY

benesch
engineers · scientists · planners
Alfred Benesch & Company
205 North Michigan Avenue, Suite 2400
Chicago, Illinois 60601
312-565-0450 Job No. 10056

FILE NAME = 0900169_68620_51_exist2.dgn	USER NAME = mbecker	DESIGNED - MFB	REVISED -
		CHECKED - MRB	REVISED -
	PLOT SCALE =	DRAWN - PRT/LLR	REVISED -
	PLOT DATE = 7/16/2012	CHECKED - MRB	REVISED -

STATE OF ILLINOIS
DEPARTMENT OF TRANSPORTATION

EXISTING PLANS
STRUCTURE NO. 090-0169
SHEET NO. SC51 OF SC63 SHEETS

F.A.I. RTE.	SECTION	COUNTY	TOTAL SHEETS	SHEET NO.
74	90-(14R;(14HB-4,14,14HVB)BR)	TAZEWELL	2433	2027
		CONTRACT NO. 68620		
		ILLINOIS FED. AID PROJECT		

x:\10000s\10056\engineering_documents_phase_ii\174over_Jackson\Final\0900169_68620_51_exist2.dgn 11:20:58 AM 7/16/2012

STATE OF ILLINOIS
DEPARTMENT OF PUBLIC WORKS & BUILDINGS
DIVISION OF HIGHWAYS

ROUTE No.	SEC.	COUNTY	TOTAL SHEETS	SHEET No.
F.A.I. RT. 74	90-14 HVB	TAZEWELL	24	9
FED. ROAD DIST. No. 7	ILLINOIS	PROJECT		

SH. 3 OF 15

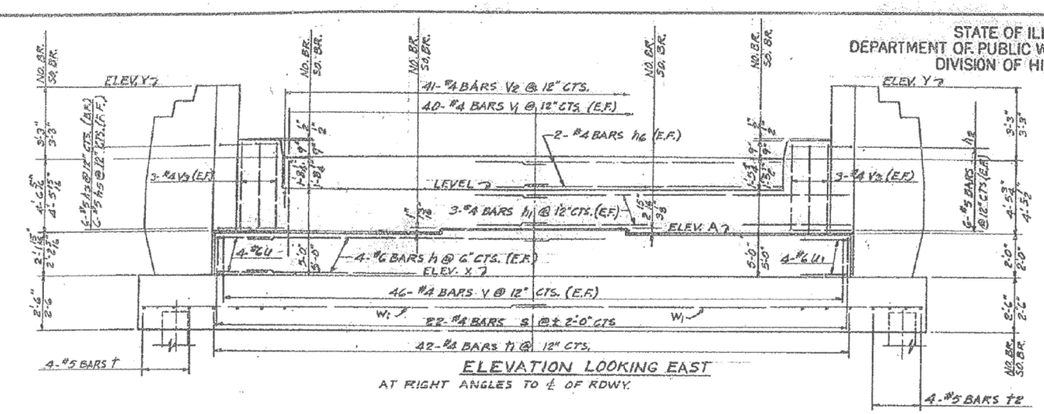

ELEVATION LOOKING EAST
AT RIGHT ANGLES TO ℄ OF RDWY.

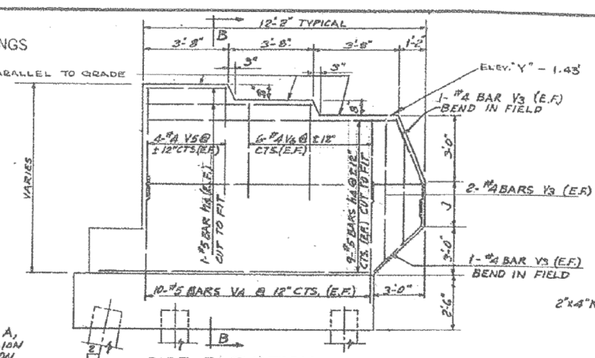

SIDE ELEVATION

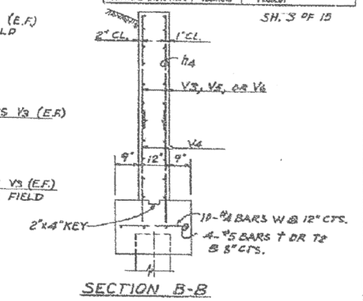

SECTION B-B

FOR ELEVATIONS A, X, & Y & DIMENSION J SEE TABLE ON SH. #4

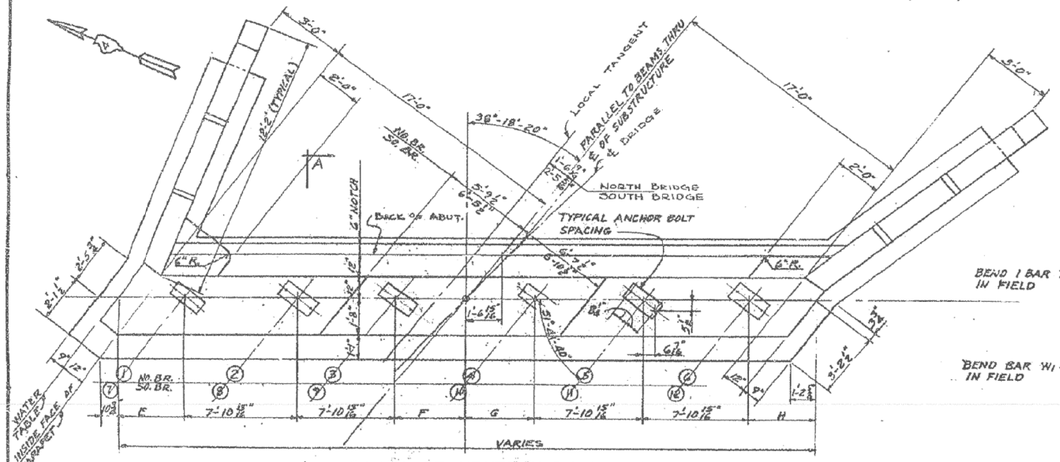

PLAN OF ABUTMENTS (EAST)
DIMENSIONS

PILE DATA
CAPACITY - 30 TONS
TYPE - CONCRETE (SEE SH. #14 FOR ALTERNATES)
ESTIMATED LENGTH - 50 FT.
NO. REQ'D. - 26 (13 FOR EACH ABUTMENT) (INCLUDES ONE TEST PILE)

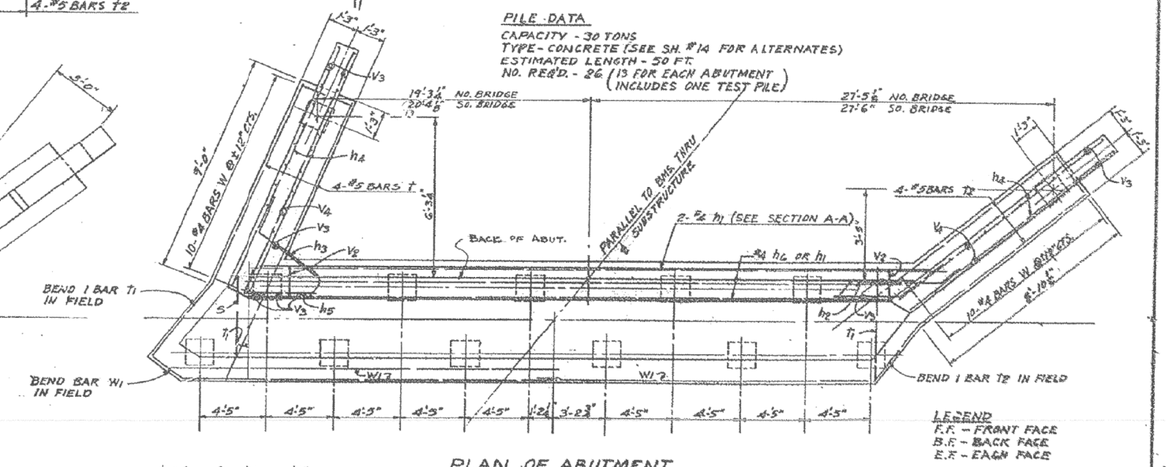

PLAN OF ABUTMENT
REINFORCEMENT & PILE SPACING

LEGEND
F.F. - FRONT FACE
B.F. - BACK FACE
E.F. - EACH FACE

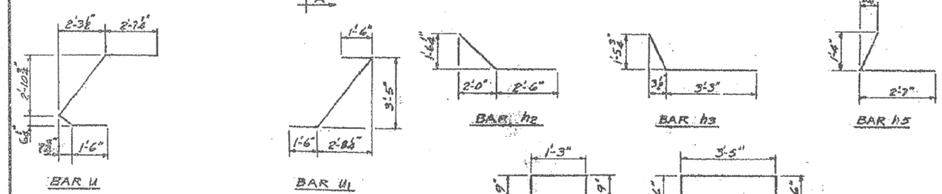

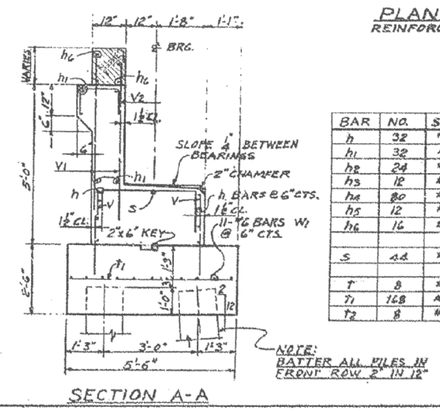

SECTION A-A

BILL OF REINFORCEMENT (2 ABUTMENTS)

BAR	NO.	SIZE	LENGTH	SHAPE	BAR	NO.	SIZE	LENGTH	SHAPE
h	32	#6	23'-8"		U	8	#6	8'-9"	
h1	32	#4	22'-3"		U1	8	#6	7'-4"	
h2	24	#5	5'-0"						
h3	12	#5	4'-9"		V	184	#4	3'-0"	
h4	80	#5	11'-10"		V1	160	#4	3'-6"	
h5	12	#5	4'-1"		V2	32	#4	2'-9"	
h6	16	#4	20'-0"		V3	56	#4	5'-0"	
					V4	80	#5	6'-6"	
S	44	#4	6'-5"		V5	32	#4	5'-7"	
					V6	48	#4	4'-10"	
T	8	#5	11'-10"						
T1	168	#4	5'-9"		W	40	#4	2'-3"	
T2	8	#5	13'-0"		W1	44	#6	26'-8"	

BILL OF MATERIAL (2 ABTS.)

ITEM	UNIT	QUANTITY
CLASS "X" CONCRETE	CU. YDS.	116.6
REINFORCEMENT BARS	LBS.	8,030
CONCRETE PILES	L.F.	1250
CONCRETE TEST PILES	EA.	1

EAST ABUTMENTS
F.A.I. ROUTE 74 SECTION 90-14 HVB

F.A.I. RT. 74 OVER I.T.R.R. & S.B.I. RT. 121
STATION 588 + 83.40
TAZEWELL COUNTY

WARREN AND VAN PRAAG, INC.
CONSULTING ENGINEERS • DECATUR, ILLINOIS

DESIGNED	HJK
CHECKED	PHM
DRAWN	HJK
CHECKED	PHM

EXAMINED — ENGINEER OF BRIDGES AND TRAFFIC STRUCTURES
PASSED — ENGINEER OF DESIGN
APPROVED — CHIEF HIGHWAY ENGINEER

FOR INFORMATION ONLY

benesch
engineers · scientists · planners

Alfred Benesch & Company
205 North Michigan Avenue, Suite 2400
Chicago, Illinois 60601
312-565-0450 Job No. 10056

FILE NAME = 0900169_68620_52_exist3.dgn	USER NAME = mbecker	DESIGNED - MFB	REVISED -
		CHECKED - MRB	REVISED -
	PLOT SCALE =	DRAWN - PRT/LLR	REVISED -
	PLOT DATE = 7/16/2012	CHECKED - MRB	REVISED -

STATE OF ILLINOIS
DEPARTMENT OF TRANSPORTATION

EXISTING PLANS
STRUCTURE NO. 090-0169
SHEET NO. SC52 OF SC63 SHEETS

F.A.I. RTE.	SECTION	COUNTY	TOTAL SHEETS	SHEET NO.
74	90-(14R;(14HB-4,14,14HVB)BR)	TAZEWELL	2433	2028
		CONTRACT NO. 68620		
		ILLINOIS FED. AID PROJECT		

x:\10000s\10056\engineering_documents_phase_ii\174over_Jackson\Final\0900169_68620_52_exist3.dgn 11:21:11 AM 7/16/2012

STATE OF ILLINOIS
DEPARTMENT OF PUBLIC WORKS & BUILDINGS
DIVISION OF HIGHWAYS

ROUTE No.	SEC.	COUNTY	TOTAL SHEETS	SHEET No.
F.A.I. 74	90-14HVB	TAZEWELL	24	16
R.T. 74	90-14HVB		3	3
FED. ROAD DIST. No. 7	ILLINOIS	PROJECT		

SH 4 OF 15

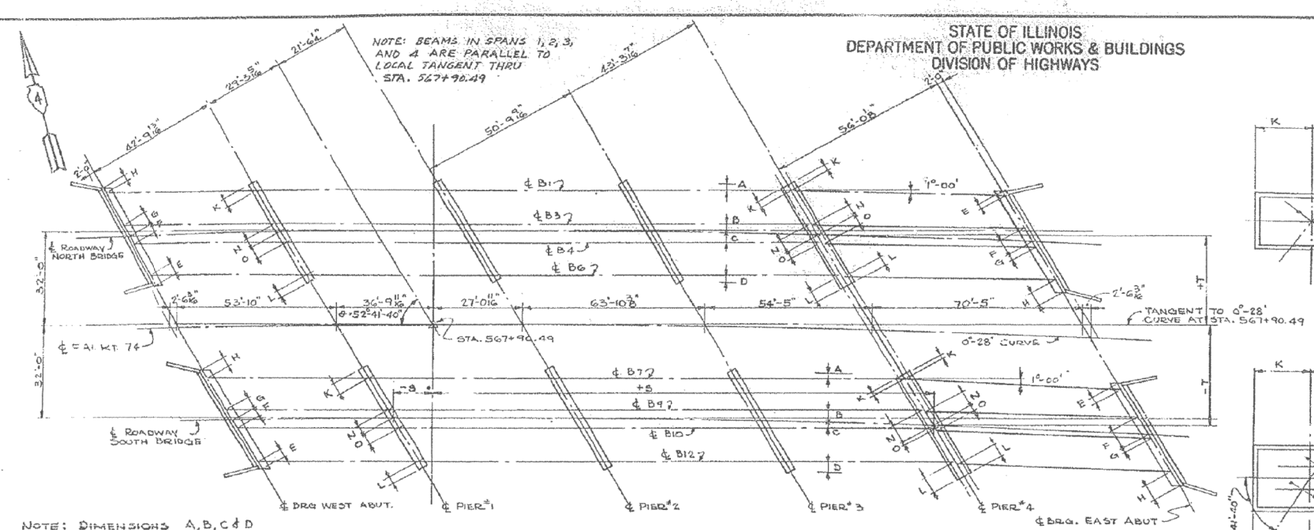

NOTE: DIMENSIONS A, B, C & D ARE MEASURED NORMAL TO AXIS OF BEAMS.

SUBSTRUCTURE PLOT PLAN

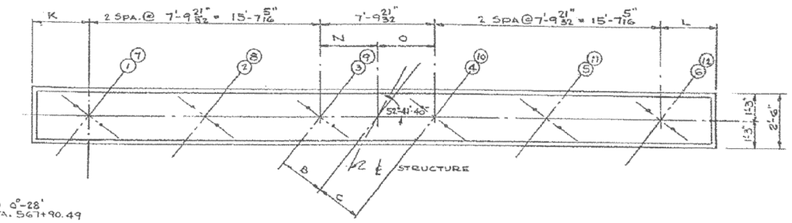

TOP PLAN PIERS 1, 2 & 3

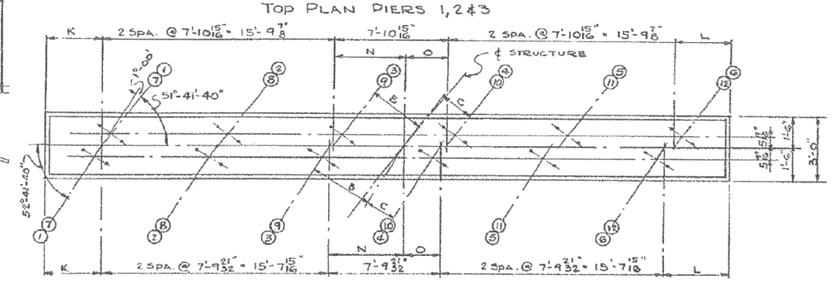

TOP PLAN PIER #4

VARIABLES FOR PIERS

	LOCATION		ELEV. D	B	C	K	L	M	N	O
NORTH BRIDGE	PIER #1		743.39	2'-9 5/16"	3'-5 9/16"	3'-5 3/16"	2'-7 9/16"	12'-7 1/8"	3'-5 29/32"	4'-3 3/4"
	PIER #2		743.20	2'-7 1/2"	3'-7"	3'-8 9/16"	2'-6 5/16"	12'-4 15/16"	3'-3 19/32"	4'-6 1/16"
	PIER #3		742.88	2'-9 11/16"	3'-4 13/16"	3'-6 15/16"	2'-10 3/16"	17'-4 5/8"	3'-6 11/32"	4'-3 5/16"
	PIER #4	SPAN 4	742.71	3'-2 11/16"	2'-11 13/16"	3'-1 9/16"	3'-5 3/8"	17'-2 9/16"	4'-0 5/8"	3'-9 1/32"
		SPAN 5		3'-0 1/8"	3'-2 3/8"		2'-11"		3'-10 1/16"	4'-0 1/8"
SOUTH BRIDGE	PIER #1		743.20	2'-7 9/16"	3'-6 15/16"	3'-8 3/16"	2'-6 3/16"	12'-4 13/16"	3'-3 1/16"	4'-5 31/32"
	PIER #2		743.00	2'-8 13/16"	3'-5 1/16"	3'-7 3/4"	2'-8 15/16"	12'-2 7/16"	3'-5 3/32"	4'-4 7/16"
	PIER #3		742.66	3'-2 1/16"	3'-0 1/16"	3'-2 1/4"	3'-4 9/16"	17'-1 7/8"	3'-11 27/32"	3'-9 13/16"
	PIER #4	SPAN 4	742.42	3'-9 3/8"	2'-4 3/4"	2'-5 1/2"	4'-3 3/16"	16'-11 1/16"	4'-9 17/32"	3'-0 1/8"
		SPAN 5		3'-7 7/8"	2'-7 7/8"		3'-8 3/4"		4'-6 15/16"	3'-4"

COORDINATES FOR SUBSTRUCTURE LAYOUT

	LOCATION	S	T
NORTH BRIDGE	℄ BRG. WEST ABUT.	-114.61	+31.47
	℄ PIER #1	-61.07	+31.85
	℄ PIER #2	+ 2.68	+32.00
	℄ PIER #3	+ 66.68	+31.82
	℄ PIER #4	+121.41	+31.40
	℄ BRG. EAST ABUT.	+192.52	+30.49
SOUTH BRIDGE	℄ BRG WEST ABUT.	- 66.12	-32.18
	℄ PIER #1	-12.41	-32.01
	℄ PIER #2	+51.52	-32.11
	℄ PIER #3	+115.72	-32.55
	℄ PIER #4	+170.63	-33.19
	℄ BRG. EAST ABUT.	+241.96	-34.39

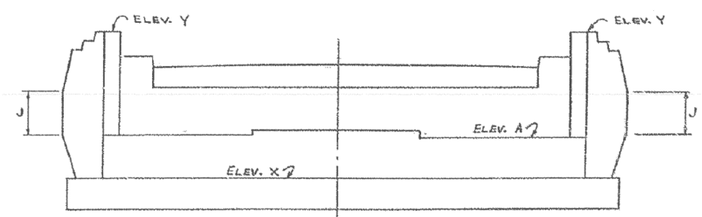

ABUTMENT ELEVATION

VARIABLES FOR ABUTMENTS

	LOCATION	ELEV "A"	ELEVATION "Y"	ELEV "X"	E	F	G	H	J
NORTH BRIDGE	WEST ABUT.	743.70	NORTH WING 751.54	741.70	3'-0 7/16"	3'-10"	3'-1 21/32"	2'-10 9/16"	2'-6 8/8"
			SOUTH " 751.43						2'-4 3/4"
	EAST "	742.24	NORTH " 750.18	740.24	3'-7 7/8"	3'-5"	4'-5 15/16"	2'-7 9/16"	2'-7 3/8"
			SOUTH " 749.97						2'-4 3/4"
SOUTH BRIDGE	WEST "	743.51	NORTH " 751.35	741.51	2'-7 7/8"	4'-3 3/32"	3'-6 5/16"	3'-4 11/16"	2'-6 8/8"
			SOUTH " 751.24						2'-4 3/4"
	EAST "	741.87	NORTH " 749.81	739.87	2'-7 1/4"	4'-6 1/2"	3'-4 7/16"	3'-9 9/16"	2'-7 3/8"
			SOUTH " 749.58						2'-4 1/2"

DESIGNED	P.H.M.
CHECKED	W.B.S.
DRAWN	P.H.M.
CHECKED	W.B.S

EXAMINED
ENGINEER OF BRIDGES AND TRAFFIC STRUCTURES
PASSED
ENGINEER OF DESIGN
APPROVED
CHIEF HIGHWAY ENGINEER

SUBSTRUCTURE LAYOUT & DETAILS

F.A.I. ROUTE 74 SECTION 90-14 HVB

F.A.I. ROUTE 74 OVER I.T.R.R. & S.B.I. ROUTE 121
STATION 568+65.40
TAZEWELL COUNTY

WARREN AND VAN PRAAG, INC.
CONSULTING ENGINEERS • DECATUR, ILLINOIS

FOR INFORMATION ONLY

benesch
engineers · scientists · planners

Alfred Benesch & Company
205 North Michigan Avenue, Suite 2400
Chicago, Illinois 60601
312-565-0450 Job No. 10056

FILE NAME = 0900169_68620_53_exist4.dgn	USER NAME = mbecker	DESIGNED - MFB	REVISED -
		CHECKED - MRB	REVISED -
	PLOT SCALE =	DRAWN - PRT/LLR	REVISED -
	PLOT DATE = 7/16/2012	CHECKED - MRB	REVISED -

STATE OF ILLINOIS
DEPARTMENT OF TRANSPORTATION

EXISTING PLANS
STRUCTURE NO. 090-0169
SHEET NO. SC53 OF SC63 SHEETS

F.A.I. RTE.	SECTION	COUNTY	TOTAL SHEETS	SHEET NO.
74	90-(14R;(14HB-4,14,14HVB)BR)	TAZEWELL	2433	2029
		CONTRACT NO. 68620		
		ILLINOIS FED. AID PROJECT		

x:\10000s\10056\engineering_documents_phase_ii\74over_Jackson\Final\0900169_68620_53_exist4.dgn 11:21:25 AM 7/16/2012

STATE OF ILLINOIS
DEPARTMENT OF PUBLIC WORKS & BUILDINGS
DIVISION OF HIGHWAYS

ROUTE No.	SEC.	COUNTY	TOTAL SHEETS	SHEET No.
FAI. RT. 74	90-14 HVB	TAZEWELL	24	11
FED. ROAD DIST. No.		ILLINOIS		

SH 5 OF 15

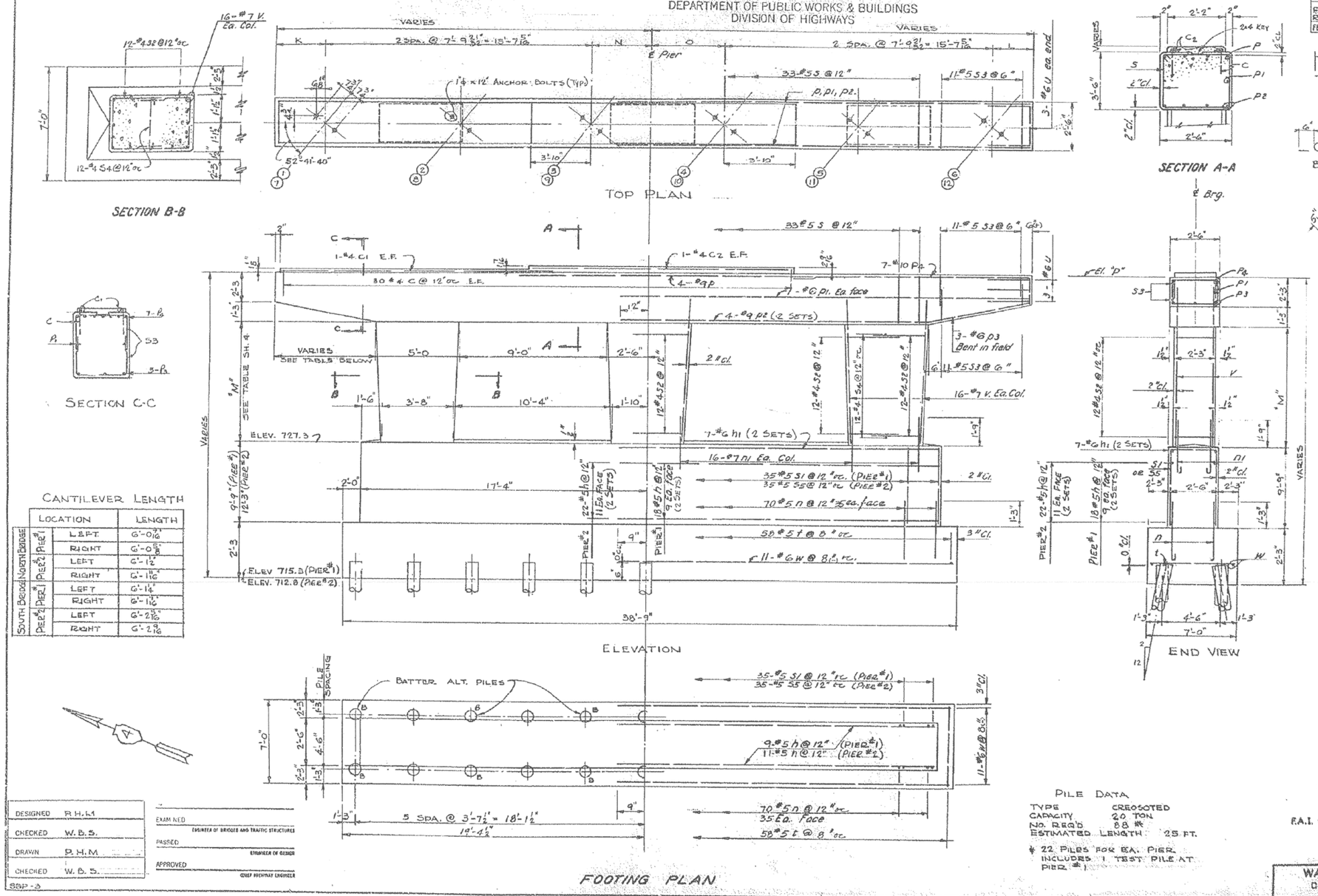

Bar	No.	Size	Length	Shape
C	240	#4	1'-6"	
h	160	#5	18'-0"	
h1	56	#6	18'-0"	
n	280	#5	3'-1"	
n1	192	#7	4'-4"	
C1	8	#4	17'-0"	
p	16	#9	19'-8"	
p1	16	#6	25'-3"	
p2	32	#9	17'-6"	
p3	24	#6	7'-8"	
p4	56	#10	16'-10"	
s	132	#5	11'-6"	
s1	70	#5	21'-2"	
s2	258	#4	7'-3"	
s3	176	#5	6'-0"	
s4	144	#4	2'-11"	
t	352	#5	6'-6"	
s5	70	#5	26'-2"	
U	24	#6	4'-10"	
C2	8	#4	15'-0"	
V	192	#7	14'-2"	
W	88	#6	19'-10"	

Class X Concrete	cu. yd.	341.2
Reinforcement Bars	lbs.	33,140
Class A Excavation	cu. yds.	260
Timber Piles	Lin. Ft.	2175
Test Piles	Ea.	1

FOR INFORMATION ONLY

benesch
engineers · scientists · planners
Alfred Benesch & Company
205 North Michigan Avenue, Suite 2400
Chicago, Illinois 60601
312-565-0450 Job No. 10056

FILE NAME = 0900169_68620_54_exist5.dgn	USER NAME = mbecker	DESIGNED - MFB	REVISED -	STATE OF ILLINOIS DEPARTMENT OF TRANSPORTATION	EXISTING PLANS STRUCTURE NO. 090-0169	F.A.I. RTE. 74	SECTION 90-(14R;(14HB-4,14,14HVB)BR)	COUNTY TAZEWELL	TOTAL SHEETS 2433	SHEET NO. 2030
		CHECKED - MRB	REVISED -							
	PLOT SCALE =	DRAWN - PRT/LLR	REVISED -					CONTRACT NO. 68620		
	PLOT DATE = 7/16/2012	CHECKED - MRB	REVISED -		SHEET NO. SC54 OF SC63 SHEETS		ILLINOIS FED. AID PROJECT			

x:\10000s\10056\engineering_documents_phase_ii\74overJackson\Final\0900169_68620_54_exist5.dgn 11:21:38 AM 7/16/2012

STATE OF ILLINOIS
DEPARTMENT OF PUBLIC WORKS & BUILDINGS
DIVISION OF HIGHWAYS

ROUTE No.	SEC.	COUNTY	TOTAL SHEETS	SHEET No.
F.A.I. Rt. 74	90-14 HVB	TAZEWELL	24	12
FED. ROAD DIST. No.	ILLINOIS			

SH. 6 OF 14.

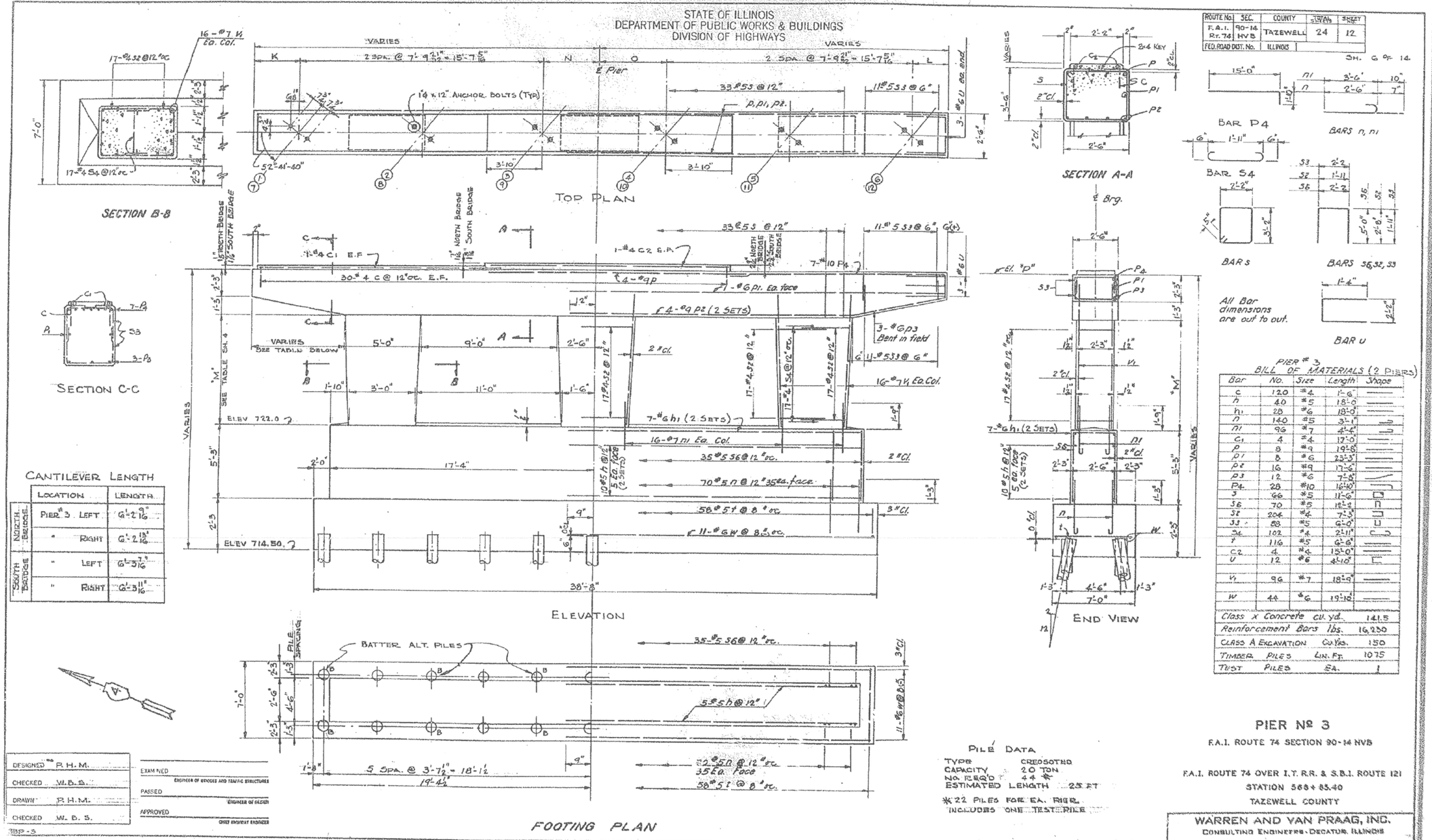

PIER # 3
BILL OF MATERIALS (2 PIERS)

Bar	No.	Size	Length	Shape
c	120	#4	1'-6	
h	40	#5	18'-0	
h1	28	#6	18'-0	
n	140	#5	3'-1"	
n1	96	#7	4'-4"	
c1	4	#4	17'-0	
p	8	#9	19'-8	
p1	8	#6	23'-3"	
p2	16	#9	17'-6	
p3	12	#6	7'-8"	
p4	28	#10	16'-10"	
s	66	#5	11'-6"	
s6	70	#5	12'-2	
s2	204	#4	7'-3"	
s3	88	#5	6'-0"	
s4	102	#4	2'-11"	
t	116	#5	6'-6"	
c2	4	#4	15'-0"	
u	12	#6	2'-10"	
v1	96	#7	18'-9	
w	44	#6	19'-10"	
Class X Concrete			cu. yd.	141.5
Reinforcement Bars			lbs.	16,230
CLASS A EXCAVATION			CU. YDS.	150
TIMBER PILES			LIN. FT.	1075
TEST PILES			EA.	1

PIER Nº 3

F.A.I. ROUTE 74 SECTION 90-14 HVB

F.A.I. ROUTE 74 OVER I.T. R.R. & S.B.I. ROUTE 121
STATION 568+85.40
TAZEWELL COUNTY

WARREN AND VAN PRAAG, INC.
CONSULTING ENGINEERS · DECATUR, ILLINOIS

FOR INFORMATION ONLY

benesch
engineers · scientists · planners
Alfred Benesch & Company
205 North Michigan Avenue, Suite 2400
Chicago, Illinois 60601
312-565-0450 Job No. 10056

FILE NAME = 0900169_68620_55_exist6.dgn	USER NAME = mbecker	DESIGNED - MFB	REVISED -
		CHECKED - MRB	REVISED -
	PLOT SCALE =	DRAWN - PRT/LLR	REVISED -
	PLOT DATE = 7/16/2012	CHECKED - MRB	REVISED -

STATE OF ILLINOIS
DEPARTMENT OF TRANSPORTATION

EXISTING PLANS
STRUCTURE NO. 090-0169
SHEET NO. SC55 OF SC63 SHEETS

F.A.I. RTE.	SECTION	COUNTY	TOTAL SHEETS	SHEET NO.
74	90-[14R;(14HB-4,14,14HVB)BR]	TAZEWELL	2433	2031
		CONTRACT NO. 68620		
		ILLINOIS FED. AID PROJECT		

x:\10000s\10056\engineering_documents_phase_ii\I74overJackson\Final\0900169_68620_55_exist6.dgn 11:21:52 AM 7/16/2012

STATE OF ILLINOIS
DEPARTMENT OF PUBLIC WORKS & BUILDINGS
DIVISION OF HIGHWAYS

ROUTE No.	SEC.	COUNTY	TOTAL SHEETS	SHEET NO.
F.A.I. RT. 74	90-14 HVB	TAZEWELL	24	13
FED. ROAD DIST. No.	ILLINOIS			

SH. 7 OF 15

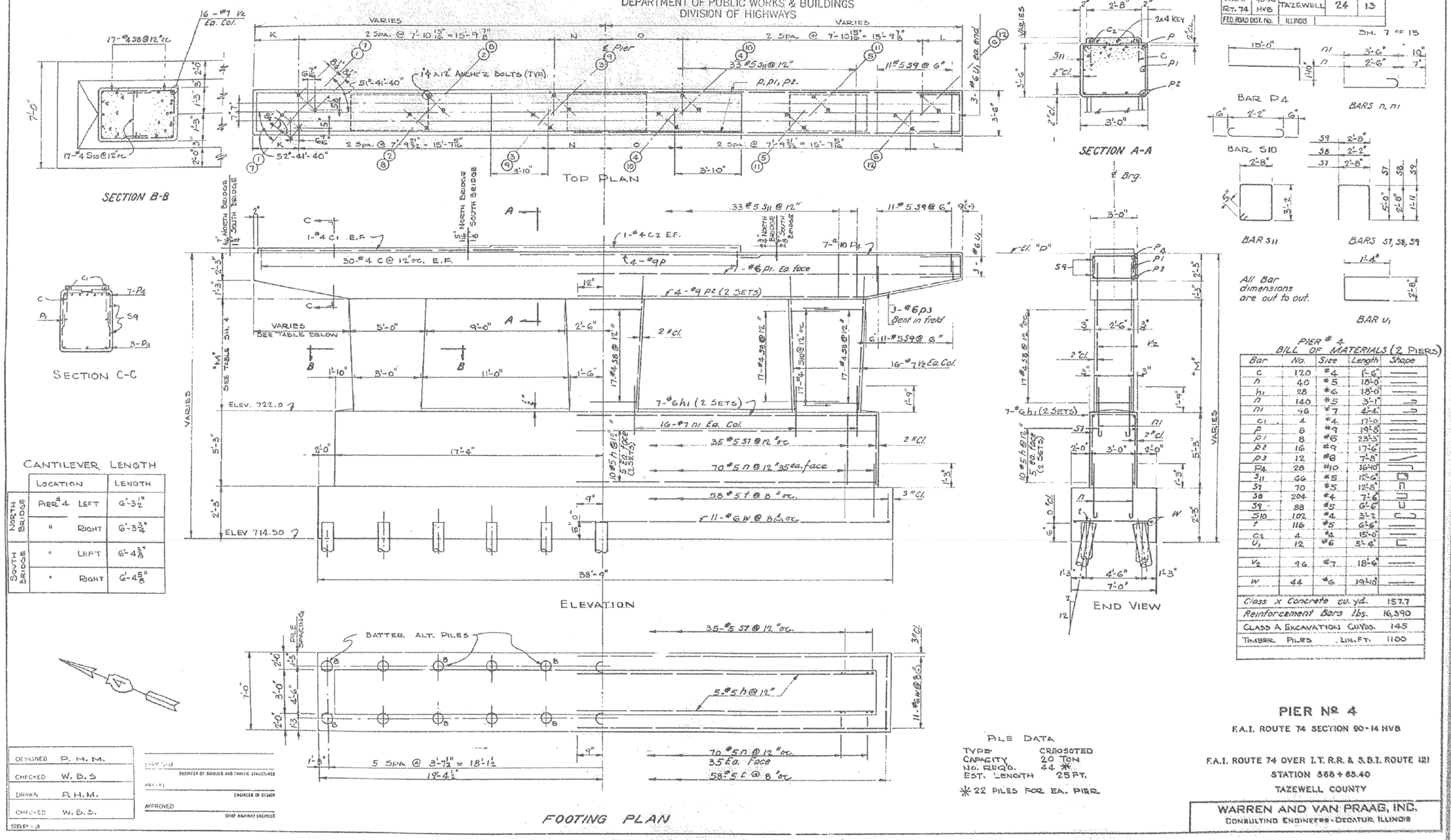

CANTILEVER LENGTH

	LOCATION		LENGTH
NORTH BRIDGE	PIER #4	LEFT	6'-3½"
	"	RIGHT	6'-3¾"
SOUTH BRIDGE	"	LEFT	6'-4⅜"
	"	RIGHT	6'-4⅝"

PIER # 4
BILL OF MATERIALS (2 PIERS)

Bar	No.	Size	Length	Shape
C	120	#4	1'-6"	
h	40	#5	18'-0"	
h1	28	#6	18'-0"	
n	140	#5	3'-1"	
n1	46	#7	4'-4"	
C1	4	#4	17'-0"	
P	8	#9	19'-8"	
P1	8	#6	23'-3"	
P2	16	#9	17'-6"	
P3	12	#6	7'-8"	
P4	28	#10	16'-10"	
S11	66	#5	12'-6"	
S7	70	#5	12'-8"	
S8	204	#4	7'-6"	
S9	88	#5	6'-6"	
S10	102	#4	3'-2"	
t	116	#5	6'-8"	
C2	4	#4	15'-0"	
U1	12	#6	5'-8"	
V2	96	#7	18'-6"	
W	44	#6	19'-10"	
Class X Concrete cu. yd.			157.7	
Reinforcement Bars lbs.			16,390	
CLASS A EXCAVATION CU.YDS.			145	
TIMBER PILES LIN.FT.			1100	

PILE DATA

TYPE	CREOSOTED
CAPACITY	20 TON
No. REQ'D.	44 *
EST. LENGTH	25 FT.

* 22 PILES FOR EA. PIER

PIER Nº 4

F.A.I. ROUTE 74 SECTION 90-14 HVB

F.A.I. ROUTE 74 OVER I.T. R.R. & S.B.I. ROUTE 121
STATION 566+85.40
TAZEWELL COUNTY

WARREN AND VAN PRAAG, INC.
CONSULTING ENGINEERS · DECATUR, ILLINOIS

DESIGNED	P. H. M.
CHECKED	W. B. S
DRAWN	P. H. M.
CHECKED	W. B. S.

SBP-3

DESIGNED — ENGINEER OF BRIDGES AND TRAFFIC STRUCTURES
CHECKED — ENGINEER OF DESIGN
APPROVED — CHIEF HIGHWAY ENGINEER

FOR INFORMATION ONLY

benesch
engineers · scientists · planners
Alfred Benesch & Company
205 North Michigan Avenue, Suite 2400
Chicago, Illinois 60601
312-565-0450 Job No. 10056

FILE NAME = 0900169_68620_56_exist7.dgn	USER NAME = mbecker	DESIGNED - MFB	REVISED -
		CHECKED - MRB	REVISED -
	PLOT SCALE =	DRAWN - PRT/LLR	REVISED -
	PLOT DATE = 7/16/2012	CHECKED - MRB	REVISED -

STATE OF ILLINOIS
DEPARTMENT OF TRANSPORTATION

EXISTING PLANS
STRUCTURE NO. 090-0169
SHEET NO. SC56 OF SC63 SHEETS

F.A.I. RTE.	SECTION	COUNTY	TOTAL SHEETS	SHEET NO.
74	90-[14R;(14HB-4,14,14HVB)BR]	TAZEWELL	2433	2032
		CONTRACT NO. 68620		
		ILLINOIS FED. AID PROJECT		

7/16/2012 11:22:06 AM x:\10000s\10056\engineering_documents_phase_ii\74over_Jackson\Final\0900169_68620_56_exist7.dgn

STATE OF ILLINOIS
DEPARTMENT OF PUBLIC WORKS & BUILDINGS
DIVISION OF HIGHWAYS

ROUTE No.	SEC.	COUNTY	TOTAL SHEETS	SHEET No.
F.A.I. RT. 74	90-14 NVB	TAZEWELL	24	12
	90-14 NVE		6	4
FED. ROAD DIST. No. 7	ILLINOIS	PROJECT		

SH. 8 OF 15

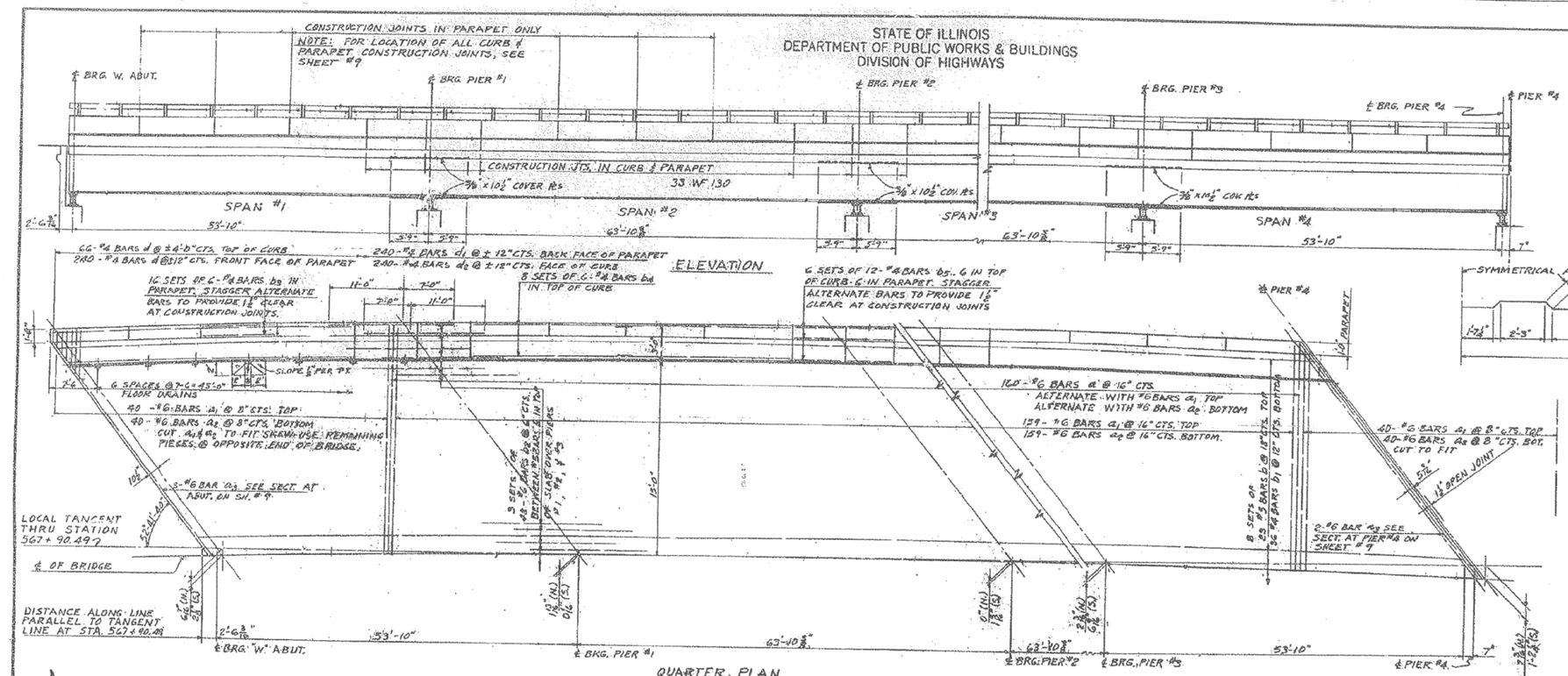

BILL OF MATERIALS
NORTH & SOUTH BRIDGES

BAR	NO	SIZE	LENGTH	SHAPE
a	388	#6	36'-3"	
a1	548	#6	35'-6"	
a2	548	#6	35'-0"	
a3	40	#6	23'-6"	
b	368	#5	30'-10"	
b1	576	#4	30'-10"	
b2	288	#6	18'-0"	
b3	384	#8	11'-0"	
b4	192	#4	30'-10"	
b5	288	#8	8'-0"	
b6	144	#8	11'-9"	
b7	140	#8	36'-0"	
b8	148	#8	30'-10"	
d	1252	#8	2'-8"	
d1	1252	#8	2'-8"	
d2	1252	#8	1'-1"	

STRAIGHT BARS

Class X Concrete	Cu. Yd.	638
Reinforcement Bars	Lb.	156,170
* Structural Steel	Lb.	663,850
Name Plate	Ea.	2

* Weight of Rockers, Bolsters, Bearing Rs, Lead Rs, & Anchor Bolts included as structural Steel. Estimated Wt. 22,290 Lbs.

(N) = NORTH BRIDGE
(S) = SOUTH BRIDGE

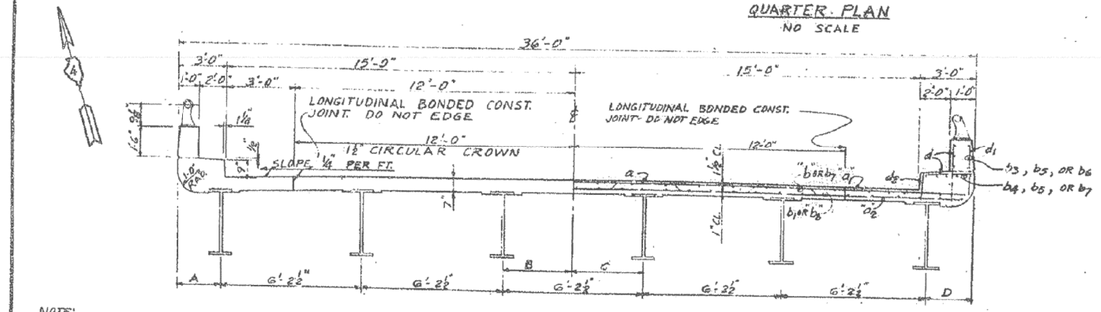

NOTE:
FOR DIMENSIONS A, B, C, & D SEE TABLE ON SH. NO. 9

CROSS SECTION
SCALE: 3/8" = 1'-0"

* NOTE: SEE SH. #10 FOR BEAM LAYOUT

SPAN #1 + 4: 33WF130 CONT. WITH 3/8"x10 1/2" COV. PL T.&B. AT PIERS #1, #2, & #3
SPAN #2: 33WF152 WITH BOT. COVER PL (COMPOSITE) FOR SIZE
SEE TABLE ON SH. #10

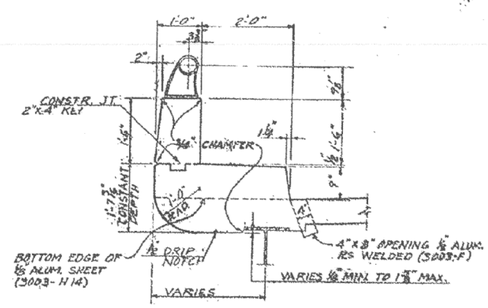

CURB DETAILS
PARAPET MOUNTED WITH ONE PIPE ALUMINUM RAIL

DESIGNED	P.M.
CHECKED	H.Y.F.
DRAWN	H.J.K.
CHECKED	H.Y.F.

EXAMINED — ENGINEER OF BRIDGES AND TRAFFIC STRUCTURES
PASSED — ENGINEER OF DESIGN
APPROVED — STATE HIGHWAY ENGINEER

SUPERSTRUCTURE
F.A.I. ROUTE 74 SECTION 90-14 NVB

F.A.I. ROUTE 74 OVER I.T. R.R. & S.B.I. ROUTE 121
STATION 588+85.40
TAZEWELL COUNTY

WARREN AND VAN PRAAG, INC.
CONSULTING ENGINEERS - DECATUR, ILLINOIS

FOR INFORMATION ONLY

benesch
engineers · scientists · planners
Alfred Benesch & Company
205 North Michigan Avenue, Suite 2400
Chicago, Illinois 60601
312-565-0450 Job No. 10056

FILE NAME = 0900169_68620_57_exist8.dgn	USER NAME = mbecker	DESIGNED - MFB	REVISED -
		CHECKED - MRB	REVISED -
	PLOT SCALE =	DRAWN - PRT/LLR	REVISED -
	PLOT DATE = 7/16/2012	CHECKED - MRB	REVISED -

STATE OF ILLINOIS
DEPARTMENT OF TRANSPORTATION

EXISTING PLANS
STRUCTURE NO. 090-0169
SHEET NO. SC57 OF SC63 SHEETS

F.A.I. RTE.	SECTION	COUNTY	TOTAL SHEETS	SHEET NO.
74	90-(14R;(14HB-4,14,14HVB)BR)	TAZEWELL	2433	2033
		CONTRACT NO. 68620		
		ILLINOIS FED. AID PROJECT		

7/16/2012 11:22:19 AM x:\10000s\10056\engineering_documents_phase_ii\74over_Jackson\Final\0900169_68620_57_exist8.dgn

STATE OF ILLINOIS
DEPARTMENT OF PUBLIC WORKS & BUILDINGS
DIVISION OF HIGHWAYS

ROUTE No.	SEC	COUNTY	TOTAL SHEETS	SHEET No.
FAI 74	90-14 HVB	TAZEWELL	24	15
	90-14 HVP		8	5
FED. ROAD DIST. No. 7	ILLINOIS	PROJECT		

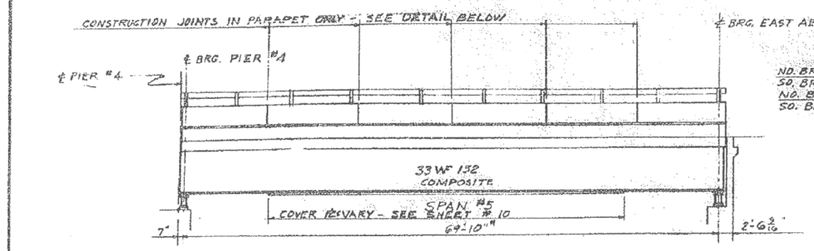

ELEVATION

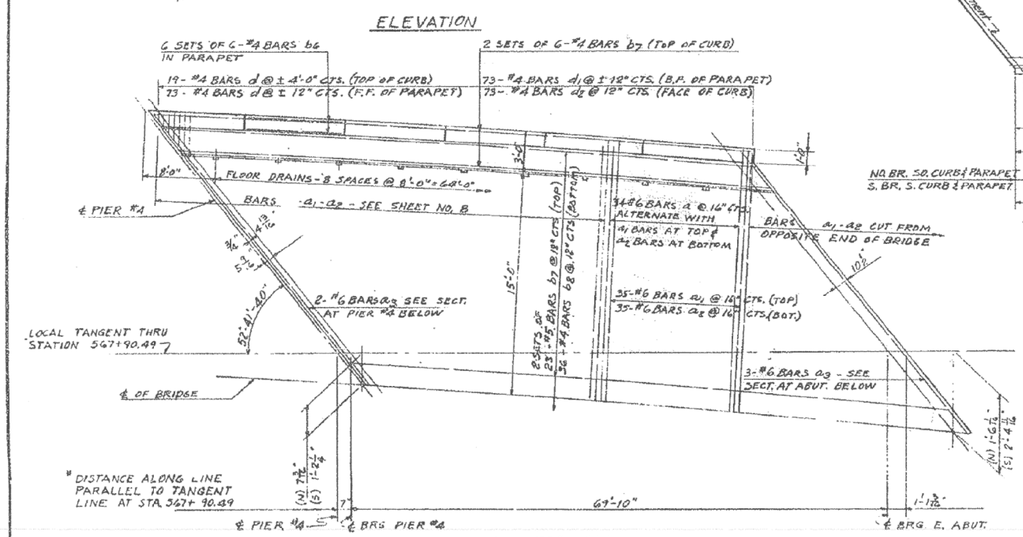

QUARTER PLAN

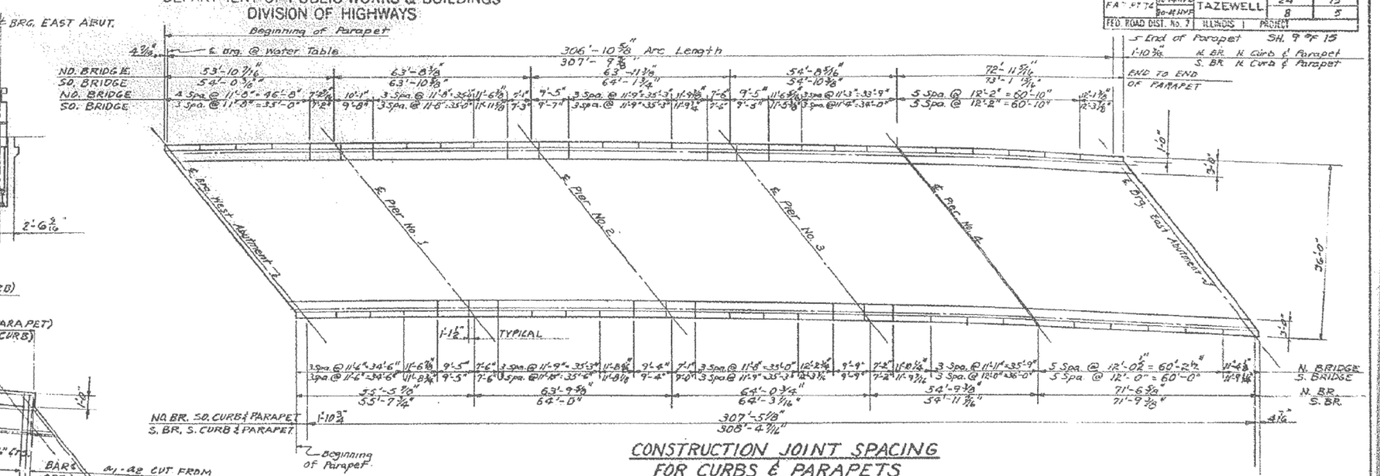

CONSTRUCTION JOINT SPACING FOR CURBS & PARAPETS

VARIABLE DIMENSIONS A, B, C, & D

	LOCATION	A	B	C	D
NORTH BRIDGE	℄ BRG. W. ABUT.	2'-3 1/8"	3'-1 7/16"	3'-0 9/16"	2'-5"
	℄ BRG. PIER #1	2'-8 3/8"	2'-9 5/16"	3'-5 3/16"	2'-1 5/8"
	℄ BRG. PIER #2	2'-11 1/2"	2'-7 1/2"	3'-7"	2'-0 5/8"
	℄ BRG. PIER #3	2'-10 5/8"	2'-9 11/16"	3'-4 13/16"	2'-3 3/16"
	℄ BRG. SPAN #4	2'-5 3/8"	3'-2 1/16"	3'-11 7/16"	2'-8 13/16"
	℄ BRG. SPAN #5	2'-5 1/16"	3'-0 5/8"	3'-2 3/8"	2'-3 7/16"
	℄ BRG. E. ABUT.	2'-10 3/8"	2'-8 3/16"	3'-6 1/16"	2'-0 1/8"
SOUTH BRIDGE	℄ BRG. W. ABUT.	2'-8 3/8"	2'-9 3/8"	3'-4 3/8"	2'-1 3/8"
	℄ BRG. PIER #1	2'-11 3/16"	2'-7 1/16"	3'-6 15/16"	2'-0"
	℄ BRG. PIER #2	2'-10 13/16"	2'-8 15/16"	3'-5 9/16"	2'-2 1/8"
	℄ BRG. PIER #3	2'-6 1/16"	3'-2 1/16"	3'-0 3/16"	2'-8 1/8"
	℄ BRG. SPAN #4	1'-11 1/8"	3'-9 3/8"	2'-4 3/8"	3'-4 15/16"
	℄ BRG. SPAN #5	1'-11 7/16"	3'-7 1/8"	2'-7 3/8"	2'-11 1/8"
	℄ BRG. E. ABUT.	2'-0 9/16"	3'-6 3/8"	2'-7 3/8"	2'-11 3/8"

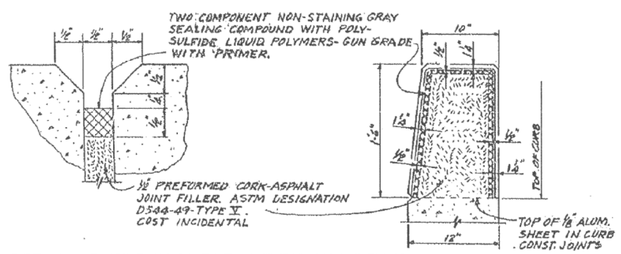

DETAIL OF JOINT IN PARAPET-TYPE HANDRAIL

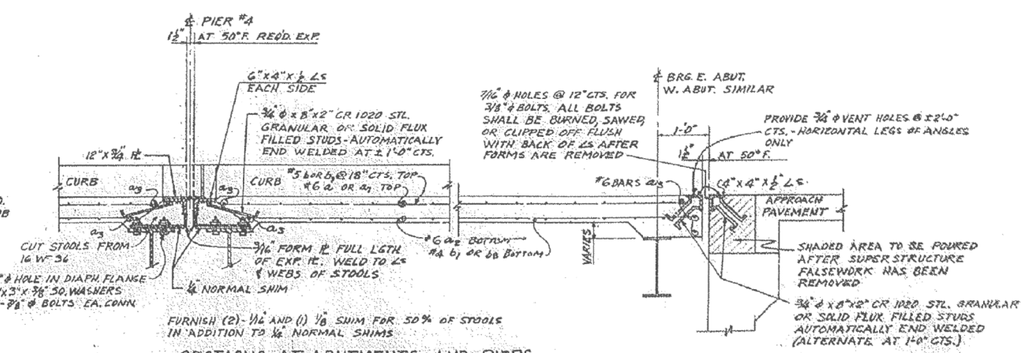

SECTIONS AT ABUTMENTS AND PIERS

DESIGNED	RMG
CHECKED	H.Y.F.
DRAWN	H.J.K.
CHECKED	H.Y.F.

EXAMINED — ENGINEER OF BRIDGE AND TRAFFIC STRUCTURES
PASSED — ENGINEER OF DESIGN
APPROVED — CHIEF HIGHWAY ENGINEER

SUPERSTRUCTURE

F.A.I. ROUTE 74 SECTION 90-14 HVB

F.A.I. ROUTE 74 OVER I.T. R.R. & S.B.I. ROUTE 121

STATION 568+85.40

TAZEWELL COUNTY

WARREN AND VAN PRAAG, INC.
CONSULTING ENGINEERS - DECATUR, ILLINOIS

FOR INFORMATION ONLY

benesch
engineers · scientists · planners

Alfred Benesch & Company
205 North Michigan Avenue, Suite 2400
Chicago, Illinois 60601
312-565-0450 Job No. 10056

FILE NAME = 0900169_68620_58_exist9.dgn	USER NAME = mbecker	DESIGNED - MFB	REVISED -
		CHECKED - MRB	REVISED -
	PLOT SCALE =	DRAWN - PRT/LLR	REVISED -
	PLOT DATE = 7/16/2012	CHECKED - MRB	REVISED -

STATE OF ILLINOIS
DEPARTMENT OF TRANSPORTATION

EXISTING PLANS
STRUCTURE NO. 090-0169
SHEET NO. SC58 OF SC63 SHEETS

F.A.I. RTE.	SECTION	COUNTY	TOTAL SHEETS	SHEET NO.
74	90-(14R;(14HB-4,14,14HVB)BR)	TAZEWELL	2433	2034
		CONTRACT NO. 68620		
		ILLINOIS FED. AID PROJECT		

7/16/2012 11:22:33 AM x:\10000s\10056\engineering_documents_phase_ii\74over_Jackson\Final\0900169_68620_58_exist9.dgn

STATE OF ILLINOIS
DEPARTMENT OF PUBLIC WORKS & BUILDINGS
DIVISION OF HIGHWAYS

ROUTE NO.	SEC.	COUNTY	TOTAL SHEETS	SHEET NO.
F.A.I. Rt. 74	90-14HVB	TAZEWELL	24	16
	90-14HVB		9	6
FED. ROAD DIST. NO. 7	ILLINOIS	PROJECT		

SH. 10 OF 15

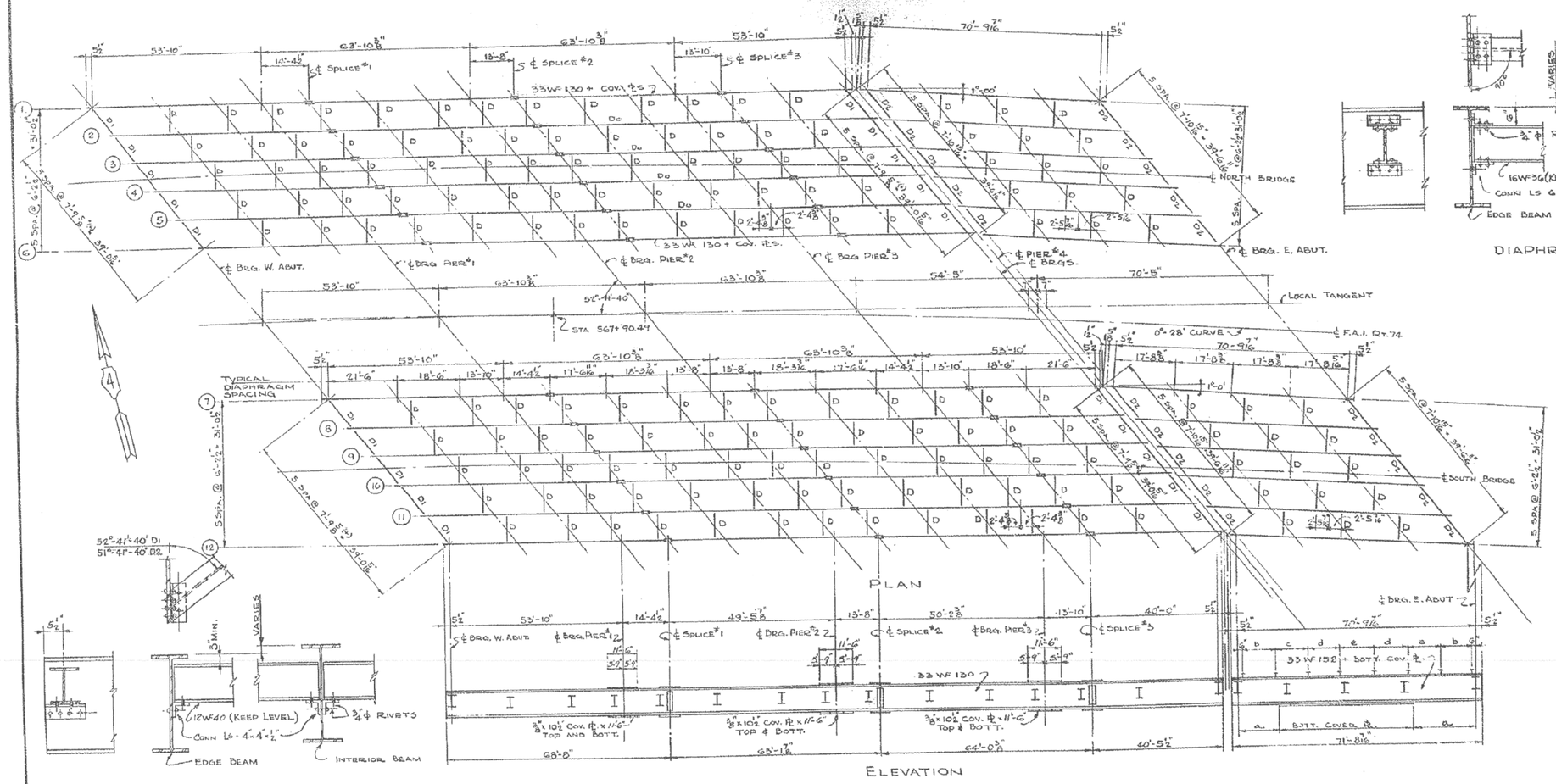

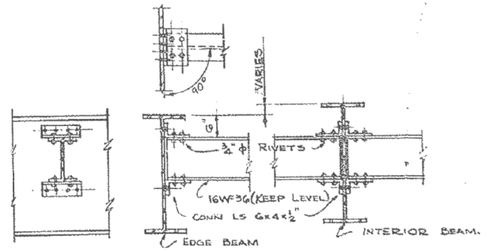

DIAPHRAGM D

DIAPHRAGM D1 & D2

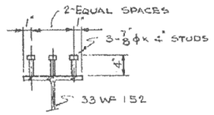

SHEAR STUD DETAIL

COMPOSITE BEAM DATA (SPAN #5)

BEAM No.	SIZE	BOTTOM COVER PLATE	a	SHEAR STUD SPACING b	c	d	e
1, 6, 7 & 12	33WF 152	10½"x 1 1/16"x 53'-11⅛"	8'-4 29/32"	17 SPA @ 7½"+10-7½"	12 SPA @ 10'-10'-0"	9 SPA. @ 1'-1"+9'-9"	6 SPA. @ 1'-6"(-)
2-5 & 8-11	33WF 152	10½"x 15/16"x 52'-6⅝"	9'-1 13/32"	17 SPA @ 7½"+10-7½"	12 SPA @ 10'-10'-0"	9 SPA. @ 1'-1"+9'-9"	6 SPA. @ 1'-6"(-)

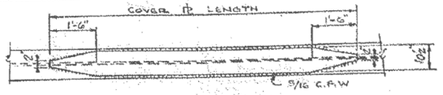

COVER PLATE DETAIL

SUPERSTRUCTURE
STRUCTURAL STEEL
F.A.I. ROUTE 74 SECTION 90-14 HVB

F.A.I. ROUTE 74 OVER I.T. R.R. & S.B.I. ROUTE 121
STATION 568+55.40
TAZEWELL COUNTY

WARREN AND VAN PRAAG, INC.
CONSULTING ENGINEERS · DECATUR, ILLINOIS

DESIGNED	P.H.M.
CHECKED	W.B.S.
DRAWN	P.H.M.
CHECKED	W.B.S.

EXAMINED _____ ENGINEER OF BRIDGES AND TRAFFIC STRUCTURES
PASSED _____ ENGINEER OF DESIGN
APPROVED _____ CHIEF HIGHWAY ENGINEER

FOR INFORMATION ONLY

benesch
engineers · scientists · planners

Alfred Benesch & Company
205 North Michigan Avenue, Suite 2400
Chicago, Illinois 60601
312-565-0450 Job No. 10056

FILE NAME = 0900169_68620_59_exist10.dgn	USER NAME = mbecker	DESIGNED - MFB	REVISED -
		CHECKED - MRB	REVISED -
	PLOT SCALE =	DRAWN - PRT/LLR	REVISED -
	PLOT DATE = 7/16/2012	CHECKED - MRB	REVISED -

STATE OF ILLINOIS
DEPARTMENT OF TRANSPORTATION

EXISTING PLANS
STRUCTURE NO. 090-0169
SHEET NO. SC59 OF SC63 SHEETS

F.A.I. RTE.	SECTION	COUNTY	TOTAL SHEETS	SHEET NO.
74	90-[14R;(14HB-4,14,14HVB)BR]	TAZEWELL	2433	2035
		CONTRACT NO. 68620		
		ILLINOIS FED. AID PROJECT		

x:\10000s\10056\engineering_documents_phase_ii\174over_Jackson\Final\0900169_68620_59_exist10.dgn 11:22:47 AM 7/16/2012

STATE OF ILLINOIS
DEPARTMENT OF PUBLIC WORKS & BUILDINGS
DIVISION OF HIGHWAYS

ROUTE No.	SEC.	COUNTY	TOTAL SHEETS	SHEET No.
F.A.I. 74	90-14HB-5 / 90-14HVB	TAZEWELL	54	17
FED. ROAD DIST. No. 7	ILLINOIS	PROJECT	8	7

SH. 11 OF 15

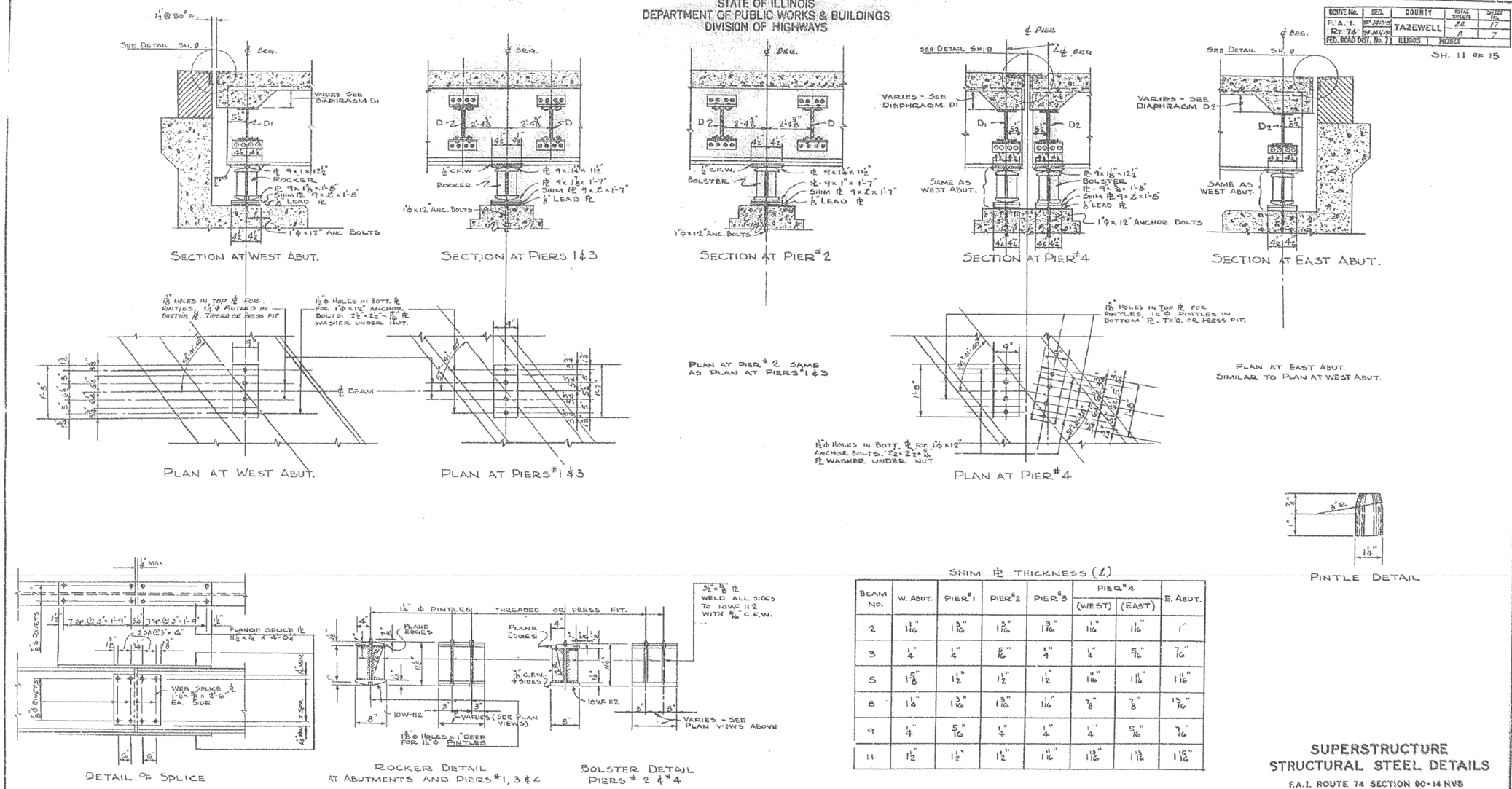

SHIM PL THICKNESS (t)

BEAM No.	W. ABUT.	PIER #1	PIER #2	PIER #3	PIER #4 (WEST)	PIER #4 (EAST)	E. ABUT.
2	1 1/16"	1 3/16"	1 3/16"	1 3/16"	1 1/16"	1 1/16"	1"
3	1/4"	1/4"	5/16"	1/4"	1/4"	5/16"	7/16"
5	1 5/8"	1 1/2"	1 1/2"	1 1/2"	1 11/16"	1 11/16"	1 11/16"
8	1 1/4"	1 3/16"	1 3/16"	1 1/16"	7/8"	7/8"	13/16"
9	1/4"	5/16"	1/4"	1/4"	1/4"	5/16"	7/16"
11	1 1/2"	1 1/2"	1 1/2"	1 11/16"	1 13/16"	1 13/16"	1 15/16"

SUPERSTRUCTURE
STRUCTURAL STEEL DETAILS
F.A.I. ROUTE 74 SECTION 90-14 NVB

F.A.I. ROUTE 74 OVER I.T. R.R. & S.B.I. ROUTE 121
STATION 568 + 63.40
TAZEWELL COUNTY

WARREN AND VAN PRAAG, INC.
CONSULTING ENGINEERS - DECATUR, ILLINOIS

DESIGNED	P.H.M.	EXAMINED	ENGINEER OF BRIDGES AND TRAFFIC STRUCTURES
CHECKED	W.B.S.	PASSED	ENGINEER OF DESIGN
DRAWN	P.H.M.	APPROVED	CHIEF HIGHWAY ENGINEER
CHECKED	W.B.S.		

FOR INFORMATION ONLY

benesch
engineers · scientists · planners
Alfred Benesch & Company
205 North Michigan Avenue, Suite 2400
Chicago, Illinois 60601
312-565-0450 Job No. 10056

FILE NAME = 0900169.68620.60.existll.dgn	USER NAME = mbecker	DESIGNED - MFB	REVISED -
		CHECKED - MRB	REVISED -
	PLOT SCALE =	DRAWN - PRT/LLR	REVISED -
	PLOT DATE = 7/16/2012	CHECKED - MRB	REVISED -

STATE OF ILLINOIS
DEPARTMENT OF TRANSPORTATION

EXISTING PLANS
STRUCTURE NO. 090-0169
SHEET NO. SC60 OF SC63 SHEETS

F.A.I. RTE.	SECTION	COUNTY	TOTAL SHEETS	SHEET NO.
74	90-(14R;(14HB-4,14,14HVB)BR)	TAZEWELL	2433	2036
		CONTRACT NO. 68620		
		ILLINOIS FED. AID PROJECT		

7/16/2012 11:23:00 AM x:\10000s\10056\engineering_documents_phase_ii\174over_Jackson\Final\0900169_68620_60_existll.dgn

STATE OF ILLINOIS
DEPARTMENT OF PUBLIC WORKS & BUILDINGS
DIVISION OF HIGHWAYS

ROUTE No.	SEC.	COUNTY	TOTAL SHEETS	SHEET No.
FAI. RT. 74	90-14HVB	TAZEWELL	24	18
	90-14HVD		8	8
FED. ROAD DIST. No. 71	ILLINOIS	PROJECT		

SH. 12 OF 15

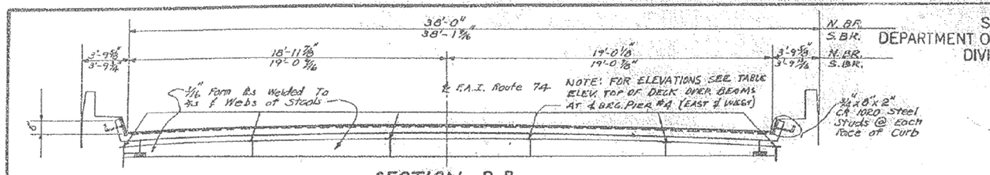

SECTION B-B

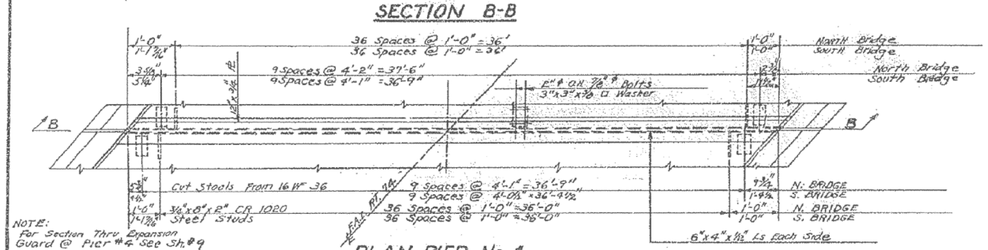

NOTE:
For Section Thru Expansion Guard @ Pier #4 See Sh. #9

PLAN-PIER No. 4

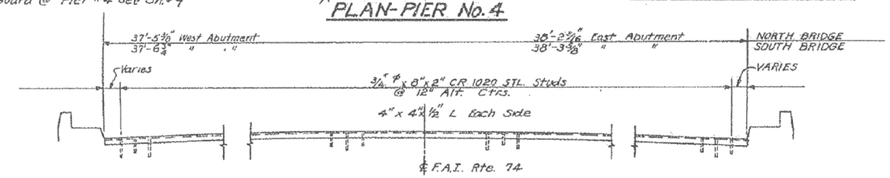

SECTION A-A

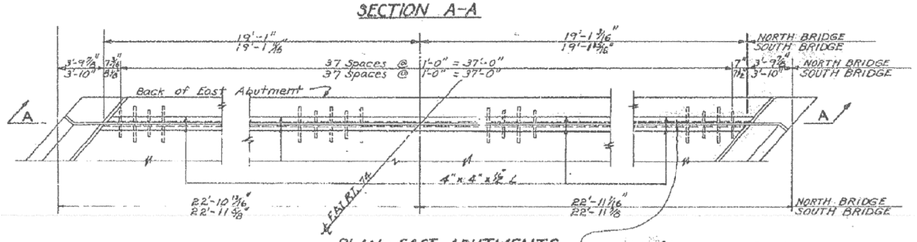

PLAN-EAST ABUTMENTS

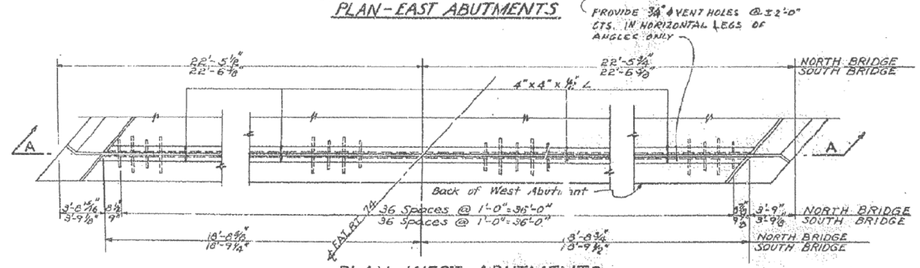

PLAN-WEST ABUTMENTS

DESIGNED	HJK
CHECKED	PHM.
DRAWN	R.C.
CHECKED	PHM

EXAMINED — ENGINEER OF BRIDGES AND TRAFFIC STRUCTURES
PASSED — ENGINEER OF DESIGN
APPROVED — CHIEF HIGHWAY ENGINEER

EXPANSION GUARD
REFER TO CROSS SECTION AT ABUTMENT ON SHEET NO. OF

ELEVATIONS TOP OF DECK OVER BEAMS (DEAD LOAD DEFLECTION NOT INCLUDED)

BEAM NO.	SPAN NO. 1					SPAN NO. 2						SPAN NO. 3						
	C.L.BRG. N. ABUT.	1/5	2/5	3/5	4/5	C.L.BRG PIER #1	1/6	1/3	1/2	2/3	5/6	C.L.BRG. PIER #2	1/6	1/3	1/2	2/3	5/6	C.L.BRG. PIER #3
1	748.28	748.23	748.19	748.15	748.10	748.06	748.02	747.98	747.93	747.89	747.85	747.81	747.76	747.72	747.68	747.64	747.59	747.55
2	748.37	748.33	748.28	748.24	748.20	748.16	748.12	748.08	748.03	747.99	747.95	747.91	747.86	747.82	747.78	747.74	747.69	747.65
3	748.42	748.38	748.33	748.29	748.25	748.20	748.16	748.12	748.08	748.03	747.99	747.95	747.91	747.86	747.82	747.78	747.74	747.69
4	748.40	748.36	748.31	748.27	748.23	748.18	748.14	748.10	748.05	748.01	747.97	747.93	747.88	747.84	747.80	747.76	747.71	747.67
5	748.31	748.27	748.22	748.18	748.14	748.09	748.05	748.01	747.96	747.92	747.88	747.83	747.79	747.75	747.71	747.67	747.62	747.58
6	748.18	747.14	748.10	748.05	748.01	747.97	747.93	747.88	747.84	747.80	747.75	747.71	747.67	747.63	747.58	747.54	747.50	747.46
7	748.08	748.04	748.00	747.95	747.91	747.87	747.82	747.78	747.74	747.70	747.65	747.61	747.57	747.53	747.48	747.44	747.40	747.35
8	748.18	748.14	748.09	748.05	748.01	747.97	747.92	747.88	747.84	747.80	747.75	747.71	747.67	747.62	747.58	747.54	747.49	747.44
9	748.22	748.18	748.14	748.10	748.05	748.01	747.97	747.93	747.88	747.84	747.80	747.75	747.71	747.67	747.63	747.58	747.53	747.48
10	748.20	748.16	748.12	748.07	748.03	747.99	747.94	747.90	747.86	747.82	747.77	747.73	747.69	747.65	747.60	747.56	747.51	747.46
11	748.11	748.07	748.03	747.98	747.94	747.90	747.85	747.81	747.77	747.73	747.68	747.64	747.60	747.56	747.52	747.47	747.42	747.37
12	747.99	747.94	747.90	747.86	747.82	747.77	747.73	747.69	747.64	747.60	747.56	747.52	747.47	747.43	747.38	747.34	747.28	747.23

ELEVATIONS TOP OF DECK OVER BEAMS

BEAM NO.	SPAN NO. 4					SPAN NO. 5							
	1/5	2/5	3/5	4/5	C.L.BRG. (WEST) PIER #4	C.L.BRG. (EAST) PIER #4	1/7	2/7	3/7	4/7	5/7	6/7	C.L.BRG. E.ABUT.
1	747.51	747.47	747.42	747.37	747.33	747.32	747.27	747.22	747.16	747.10	747.04	746.98	746.92
2	747.61	747.56	747.52	747.47	747.41	747.40	747.35	747.30	747.25	747.19	747.13	747.07	747.00
3	747.65	747.61	747.56	747.51	747.46	747.45	747.40	747.34	747.29	747.23	747.17	747.10	747.03
4	747.63	747.58	747.54	747.49	747.43	747.42	747.37	747.31	747.26	747.20	747.13	747.07	747.00
5	747.54	747.50	747.45	747.40	747.34	747.33	747.28	747.22	747.16	747.10	747.03	746.97	746.90
6	747.41	747.36	747.31	747.26	747.20	747.19	747.14	747.08	747.02	746.96	746.89	746.82	746.75
7	747.30	747.24	747.19	747.13	747.07	747.05	746.99	746.93	746.86	746.79	746.72	746.65	746.57
8	747.38	747.33	747.27	747.20	747.14	747.13	747.07	747.00	746.93	746.86	746.79	746.72	746.64
9	747.43	747.37	747.31	747.25	747.18	747.17	747.11	747.04	746.97	746.90	746.83	746.75	746.67
10	747.41	747.35	747.29	747.23	747.16	747.15	747.08	747.01	746.94	746.87	746.80	746.72	746.64
11	747.32	747.26	747.20	747.14	747.07	747.05	746.99	746.92	746.85	746.77	746.70	746.62	746.54
12	747.17	747.11	747.05	746.99	746.92	746.90	746.83	746.76	746.69	746.62	746.54	746.46	746.38

ELEVATIONS TOP OF BEAMS

BEAM NO.	W. ABUT.	PIER #1	PIER #2	PIER #3	(WEST) PIER #4	(EAST) PIER #4	E. ABUT.
1	747.69	747.48	747.22	746.97	746.74	746.73	746.34
2	747.78	747.58	747.32	747.07	746.83	746.82	746.42
3	747.83	747.62	747.37	747.11	746.87	746.86	746.45
4	747.82	747.60	747.34	747.09	746.85	746.84	746.42
5	747.73	747.51	747.25	747.00	746.76	746.75	746.31
6	747.60	747.38	747.13	746.87	746.62	746.61	746.17
7	747.50	747.28	747.03	746.77	746.48	746.47	745.99
8	747.60	747.38	747.13	746.86	746.56	746.55	746.06
9	747.64	747.43	747.17	746.90	746.60	746.59	746.09
10	747.62	747.40	747.15	746.88	746.58	746.56	746.06
11	747.53	747.31	747.06	746.79	746.49	746.47	745.96
12	747.40	747.19	746.93	746.65	746.34	746.32	745.79

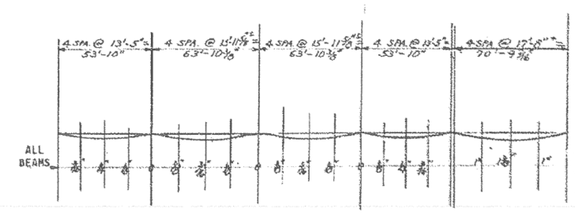

DEAD LOAD DEFLECTION DIAGRAM

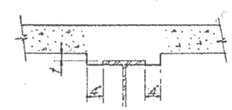

After all structural steel has been erected, elevations of the top flanges of the beams shall be taken at intervals not to exceed 10'-0". From these elevations subtract the increment of deflections for these points, determined from the D.L. Deflection diagram. The elevations so attained subtracted from the theoretical grade elevations, minus floor thickness equals the fillet height above top of beam.

METHOD OF DETERMINING FILLET HEIGHT "t"

MISCELLANEOUS DETAILS

F.A. ROUTE 74 SECTION 90-14 HVB

F.A. ROUTE 74 OVER I.T.R.R. & S.B.I. ROUTE 121
STATION 568+65.40
TAZEWELL COUNTY

WARREN AND VAN PRAAG, INC.
CONSULTING ENGINEERS - DECATUR, ILLINOIS

FOR INFORMATION ONLY

benesch
engineers · scientists · planners

Alfred Benesch & Company
205 North Michigan Avenue, Suite 2400
Chicago, Illinois 60601
312-565-0450 Job No. 10056

FILE NAME = 0900169_68620_61_exist12.dgn	USER NAME = mbecker	DESIGNED - MFB	REVISED -
		CHECKED - MRB	REVISED -
	PLOT SCALE =	DRAWN - PRT/LLR	REVISED -
	PLOT DATE = 7/16/2012	CHECKED - MRB	REVISED -

STATE OF ILLINOIS
DEPARTMENT OF TRANSPORTATION

EXISTING PLANS
STRUCTURE NO. 090-0169
SHEET NO. SC61 OF SC63 SHEETS

F.A.I. RTE.	SECTION	COUNTY	TOTAL SHEETS	SHEET NO.
74	90-(14R;(14HB-4,14,14HVB)BR)	TAZEWELL	2433	2037
		CONTRACT NO. 68620		
		ILLINOIS FED. AID PROJECT		

x:\100000s\10056\engineering_documents_phase_ii\174over_Jackson\Final\0900169_68620_61_exist12.dgn 11:23:14 AM 7/16/2012

STATE OF ILLINOIS
DEPARTMENT OF PUBLIC WORKS & BUILDINGS
DIVISION OF HIGHWAYS

ROUTE No.	SEC.	COUNTY	TOTAL SHEETS	SHEET No.
F.A.I. RT. 74	90-14 HVB	TAZEWELL	24	19
FED. ROAD DIST. No. 7	ILLINOIS	PROJECT		

SH. 12 of 15

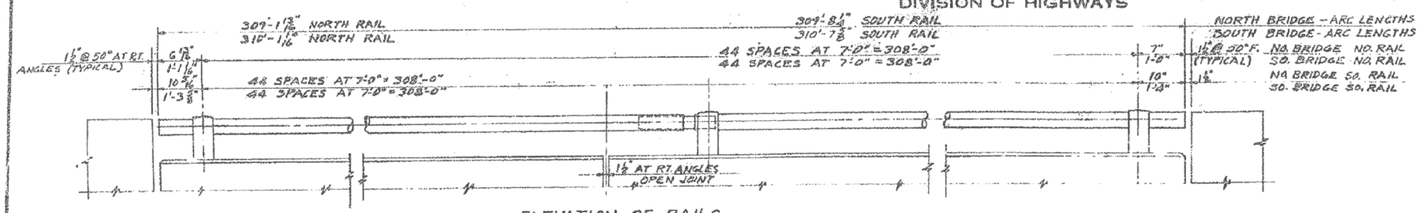

ELEVATION OF RAILS

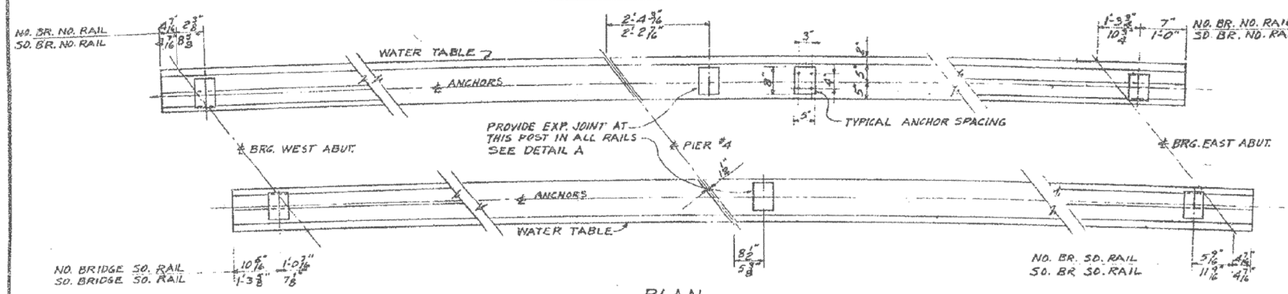

PLAN

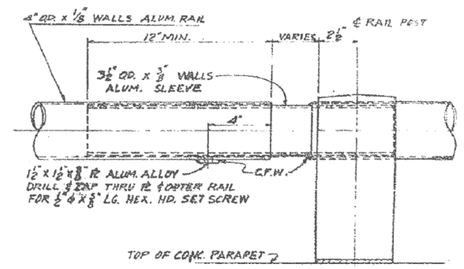

DETAIL A
RAIL CONNECTION AT EXPANSION JOINTS

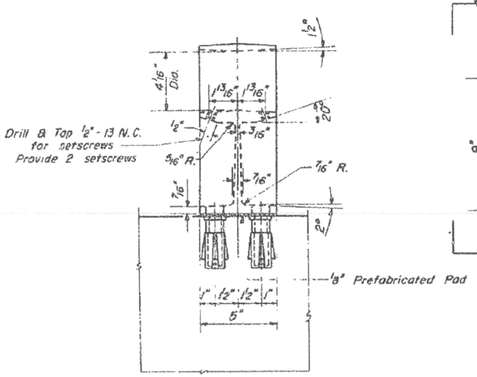

VIEW B-B

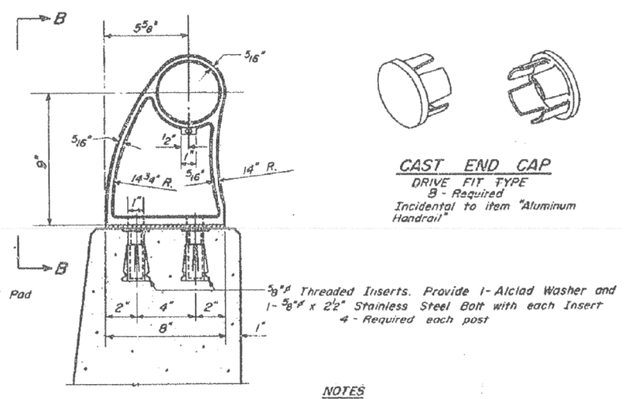

SECTION A-A

RAIL POST DETAILS

CAST END CAP
DRIVE FIT TYPE
B - Required
Incidental to item "Aluminum Handrail"

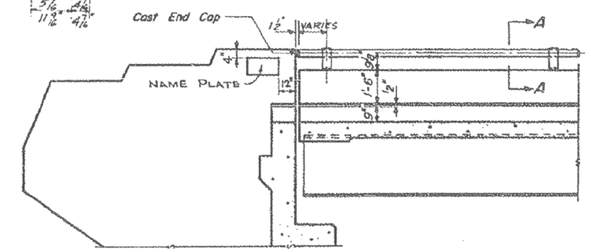

ELEVATION - END POST

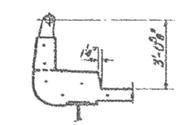

SEC. THRU CURB

BILL OF MATERIAL

Item	Unit	Quantity
Aluminum Handrail	Lin. Ft.	1240

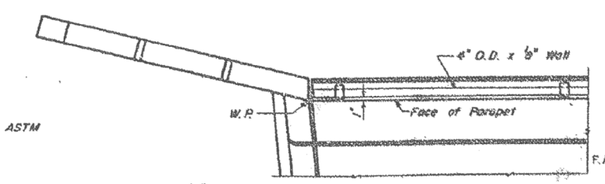

PLAN - END POST

NOTES

All Posts shall be placed normal to parapet

All Posts shall be of Aluminum conforming to ASTM Specification B-108 alloy SG-70B-T6.

All Rail Tubing shall be of Aluminum conforming to ASTM Specification B-235 alloy GS-11A-T6.

Alclad Washers shall be made from sheet conforming to ASTM Specification B-209 alloy clad CG-42A-T4.

Rail Tubing may be cut to 1, 2, or max. of 3 panel lengths.

For material composition of Prefabricated Pad, See Art. 54.9 (f), (Bearings and Anchorage), of the Std. Specs.

Set Screws shall be of Aluminum conforming to ASTM Specification B-211 alloy CG-42A-T4.

DESIGNED	HJK.	EXAMINED 19
CHECKED	GL.	PASSED ENGINEER OF BRIDGE AND TRAFFIC STRUCTURES
DRAWN	HJK	APPROVED CHAIRMAN OF ORDER
CHECKED	PHM.	CHIEF ENGINEER & ENGINEER

HANDRAIL
F.A.I. ROUTE 74 SECTION 90-14 HVB
F.A.I. RT. 74 OVER I.T.R.R. & S.B.I. RT. 121
STATION 568+65.40
TAZEWELL COUNTY

WARREN AND VAN PRAAG, INC.
CONSULTING ENGINEERS DE ATUR, ILLINOIS

FOR INFORMATION ONLY

benesch
engineers · scientists · planners
Alfred Benesch & Company
205 North Michigan Avenue, Suite 2400
Chicago, Illinois 60601
312-565-0450 Job No. 10056

FILE NAME = 0900169_68620_62_exist13.dgn	USER NAME = mbecker	DESIGNED - MFB	REVISED -	STATE OF ILLINOIS DEPARTMENT OF TRANSPORTATION	EXISTING PLANS STRUCTURE NO. 090-0169	F.A.I. RTE. 74	SECTION 90-(14R;(14HB-4,14,14HVB)BR)	COUNTY TAZEWELL
		CHECKED - MRB	REVISED -			TOTAL SHEETS 2433	SHEET NO. 2038	
	PLOT SCALE =	DRAWN - PRT/LLR	REVISED -			CONTRACT NO. 68620		
	PLOT DATE = 7/16/2012	CHECKED - MRB	REVISED -		SHEET NO. SC62 OF SC63 SHEETS	ILLINOIS FED. AID PROJECT		

x:\10000s\10056\engineering_documents_phase_ii\74over_Jackson\Final\0900169_68620_62_exist13.dgn 7/16/2012 11:23:27 AM

STATE OF ILLINOIS
DEPARTMENT OF PUBLIC WORKS & BUILDINGS
DIVISION OF HIGHWAYS

ROUTE No.	SEC.	COUNTY	TOTAL SHEETS	SHEET No.
F.A.I. Rt. 74.	90-14 HVB	TAZEWELL	24	20
FED. ROAD DIST. No. 7	ILLINOIS	PROJECT		

SH. NO. 14 OF 15

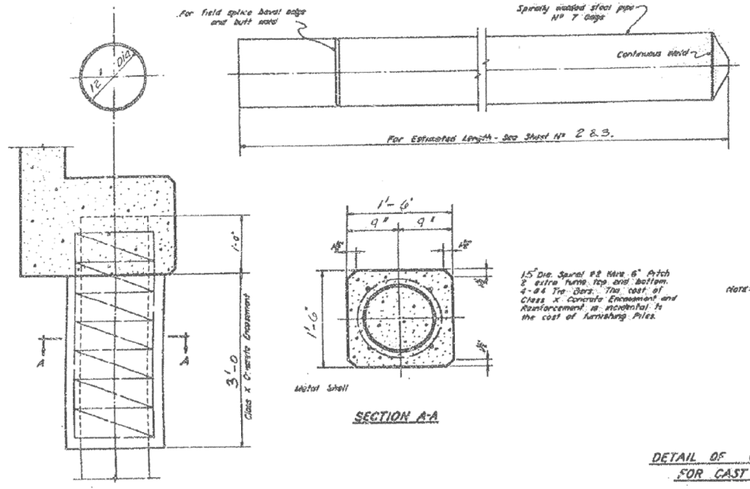

SECTION A-A

15" Dia. Spiral #8 Wire, 6" Pitch
2 extra turns top and bottom.
4-#4 Tie Bars. The cost of Class X Concrete Encasement and Reinforcement is incidental to the cost of furnishing Piles.

Note: Driving, and bearing ends of pipe shall be cut square.

OPTIONAL FLAT END

DETAIL OF CYLINDRICAL STEEL SHELL FOR CAST IN PLACE CONCRETE PILES

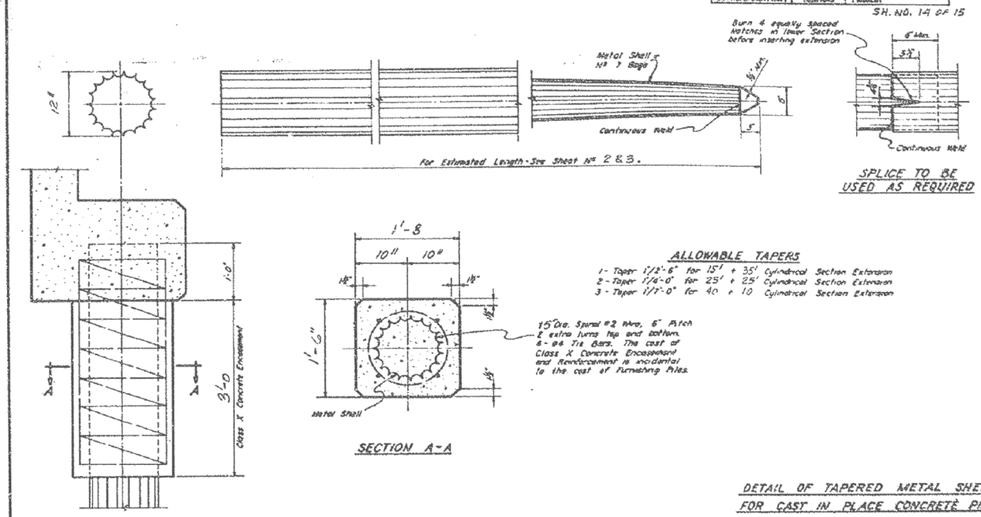

SPLICE TO BE USED AS REQUIRED

ALLOWABLE TAPERS

1 - Taper 1/12'-6" for 15' + 35' Cylindrical Section Extension
2 - Taper 1/16'-0" for 25' + 25' Cylindrical Section Extension
3 - Taper 1/17'-0" for 40 + 10 Cylindrical Section Extension

15" Dia. Spiral #2 Wire, 6" Pitch
2 extra turns top and bottom.
6-#4 Tie Bars. The cost of Class X Concrete Encasement and Reinforcement is incidental to the cost of Furnishing Piles.

SECTION A-A

DETAIL OF TAPERED METAL SHELL FOR CAST IN PLACE CONCRETE PILES

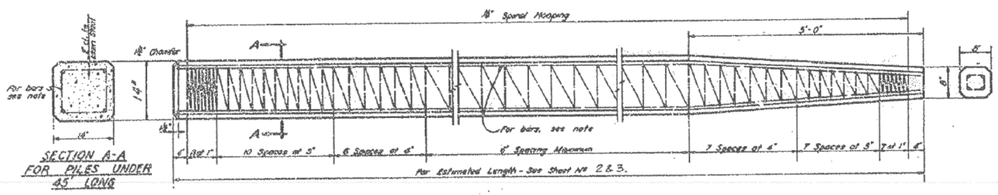

SECTION A-A FOR PILES UNDER 45' LONG

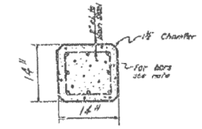

SECTION A-A FOR PILES 45' OR MORE

Note: For 14" Piles 45' long or more use 6-#8 bars - 4 for the full length and 4 to the point of bevel.
For 14" Piles under 45'-0" long use 6-#4 bars the full length.

Handling: For Pile lengths up 45 Ft. use two slings placed at a distance of 0.21 L* from each end.
For Piles longer than 45 Ft. use three slings placed at a distance of 0.21 L from each end and at mid-point of pile.

* L = Over all length of pile to be handled.

DETAIL OF PRECAST CONCRETE PILES

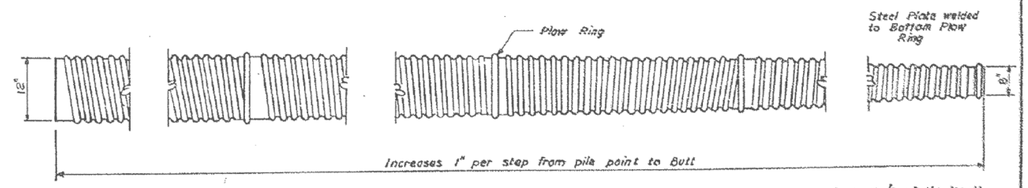

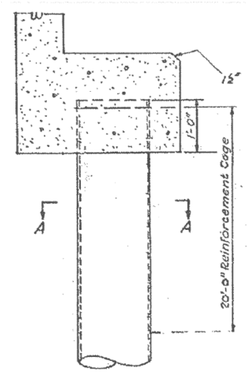

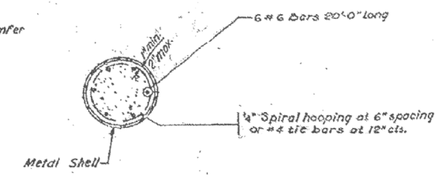

SECTION A-A

DETAIL OF MANDREL DRIVEN STEP - TAPER PILES FOR CAST IN PLACE CONCRETE PILES

At least ⅓ of the length of pile shall have a Butt diameter equal to or greater than 12"
Gages are furnished to suit soil conditions (18 Gage Min.)

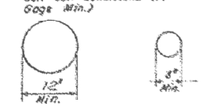

BUTT POINT

PILE DETAILS

F.A.I. ROUTE 74 SECTION 90-14 HVB

F.A.I. ROUTE 74 OVER I.T.R.R. & S.B.I. ROUTE 121,
STATION 568 + 65.40
TAZEWELL COUNTY

WARREN AND VAN PRAAG, INC.
CONSULTING ENGINEERS - DECATUR, ILLINOIS

DESIGNED	G. LITTKE
CHECKED	P. McHood
DRAWN	G. LITTKE
CHECKED	P. McHood

EXAMINED — ENGINEER OF BRIDGE AND TRAFFIC STRUCTURES
PASSED — ILLINOIS DIVISION OF HIGHWAYS
APPROVED — CHIEF HIGHWAY ENGINEER

FOR INFORMATION ONLY

benesch
engineers · scientists · planners

Alfred Benesch & Company
205 North Michigan Avenue, Suite 2400
Chicago, Illinois 60601
312-565-0450 Job No. 10056

FILE NAME = 0900169_68620_63_exist14.dgn	USER NAME = mbecker	DESIGNED - MFB	REVISED -
		CHECKED - MRB	REVISED -
	PLOT SCALE =	DRAWN - PRT/LLR	REVISED -
	PLOT DATE = 7/16/2012	CHECKED - MRB	REVISED -

STATE OF ILLINOIS
DEPARTMENT OF TRANSPORTATION

EXISTING PLANS
STRUCTURE NO. 090-0169
SHEET NO. SC63 OF SC63 SHEETS

F.A.I. RTE.	SECTION	COUNTY	TOTAL SHEETS	SHEET NO.
74	90-(14R;(14HB-4,14,14HVB)BR)	TAZEWELL	2433	2039
		CONTRACT NO. 68620		
		ILLINOIS FED. AID PROJECT		

x:\10000s\10056\engineering_documents_phase_ii\174over_Jackson\Final\0900169_68620_63_exist14.dgn 11:23:41 AM 7/16/2012

Bench Mark: Chiseled "[]" on sign (lodging) fdn on off ramp for WB I-74 to Morton Ave Ramp, Sta. 8+90, Elev. 716.56

Existing Structures: Current Structure S.N. 090-0141 built in 1993/94 Sect.(90-15-1, 15-1HB, 15wi)-1. Structure consists of dual 2-span continuous steel WF superstructures with 7.5 inch reinforced concrete decks and no overlay. The superstructure total width varies from 103'-2" to 107'-2". Stage construction shall be utilized to maintain traffic during construction.

No salvage.

APPROVED
For Structural Adequacy Only
Engineer of Bridges & Structures

DESIGN SPECIFICATIONS

2002 AASHTO Standard Specifications for Highway Bridges, 17th Edition

DESIGN STRESSES

FIELD UNITS

f'c = 3,500 psi
fy = 60,000 psi (Reinforcement)
fy = 36,000 psi (M270 Grade 36)

SCOPE OF WORK

1. Remove existing concrete median and longitudinal 1" open joint during Stage I.
2. Remove existing Median Preformed Joint Seals at abutments during Stage I.
3. Install proposed end and intermediate diaphragms during Stage I.
4. Remove existing southbound portion Preformed Joint Seals at abutment during Stage II.
5. Remove existing northbound portion Preformed Joint Seals at abutment during Stage III.
6. Provide full width permanent Preformed Joint Strip Seal for all portions during Stage III.
7. Construct raised concrete median at Stage IV.

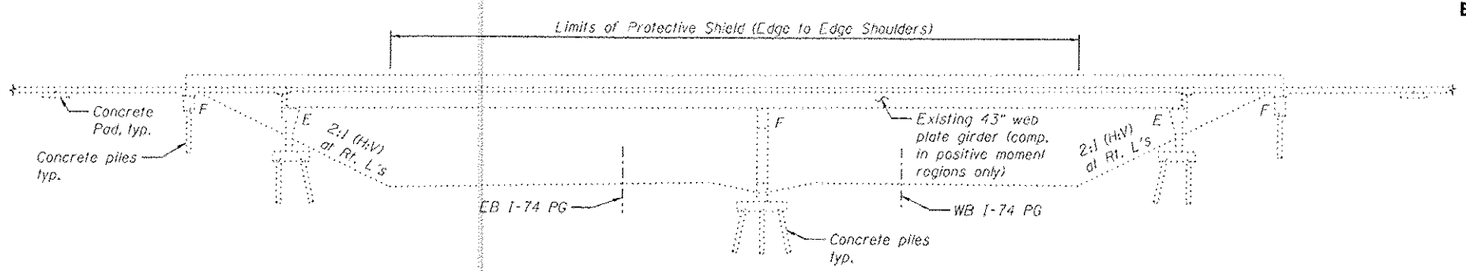

ELEVATION

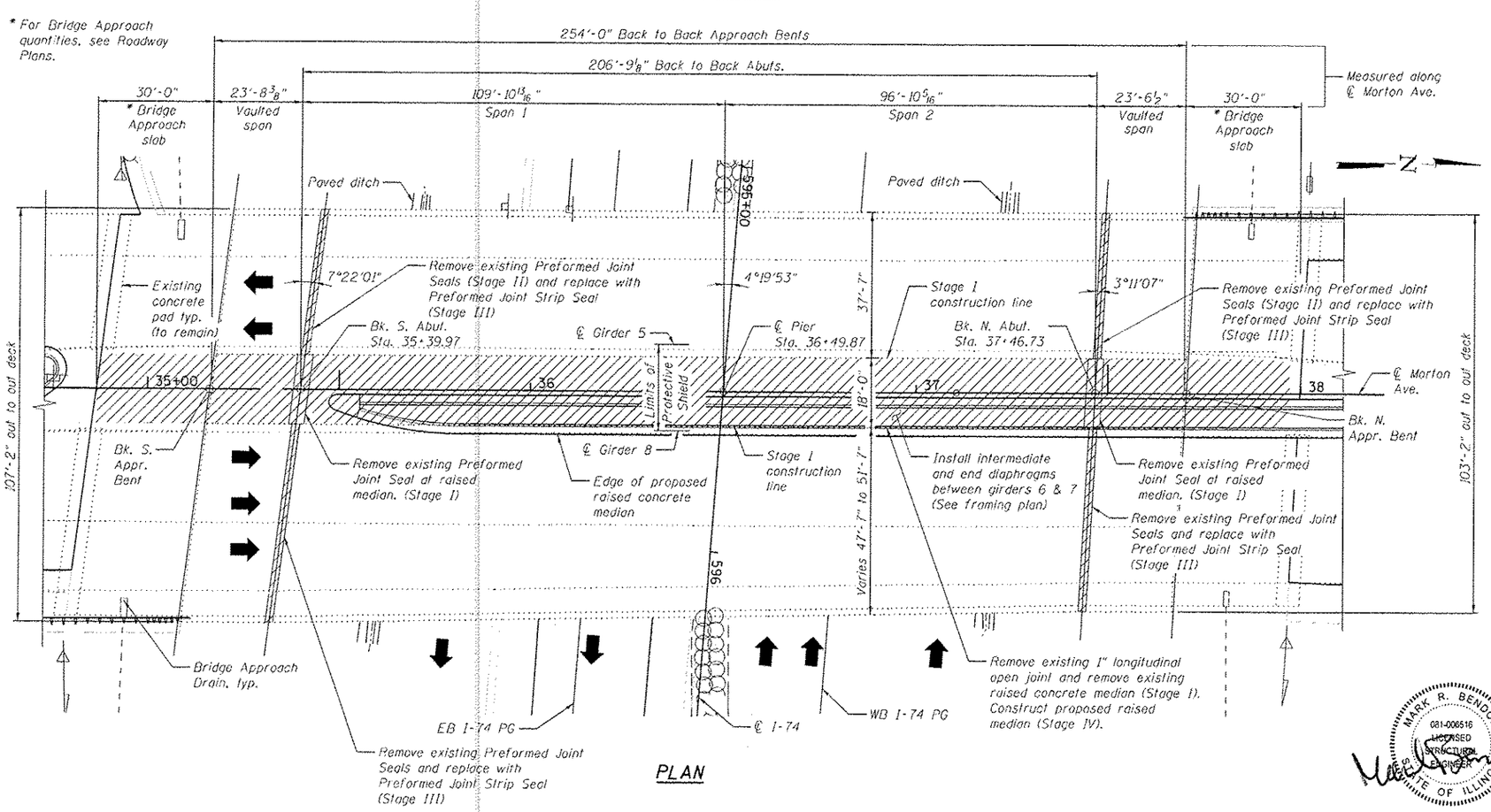

PLAN

LEGEND

Removal area

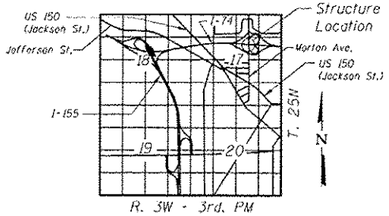

LOCATION SKETCH

MARK R. BENDOK
081-006516
LICENSED STRUCTURAL ENGINEER
STATE OF ILLINOIS

EXPIRATION DATE 11-30-2012
DATE: 8/17/12

GENERAL PLAN AND ELEVATION
MORTON AVENUE OVER I-74
F.A.I. RTE. 74
SEC. 90-[14R;(14HB-4,14,14HVB)BR]
TAZEWELL COUNTY
STATION 36+49.87
STRUCTURE NO. 090-0141

benesch
engineers · scientists · planners
Alfred Benesch & Company
205 North Michigan Avenue, Suite 2400
Chicago, Illinois 60601
312-565-0450 Job No. 10056

FILE NAME = 0900141_68620_01_gpe.dgn	USER NAME = mbecker	DESIGNED - JDC	REVISED -	STATE OF ILLINOIS DEPARTMENT OF TRANSPORTATION	GENERAL PLAN AND ELEVATION STRUCTURE NO. 090-0141	F.A.I. RTE. 74	SECTION 90-(14R;(14HB-4,14,14HVB)BR)	COUNTY TAZEWELL	TOTAL SHEETS 2433 / SHEET NO. 2040
		CHECKED - MRB/AAY	REVISED -					CONTRACT NO. 68620	
	PLOT SCALE =	DRAWN - PRT	REVISED -					ILLINOIS FED. AID PROJECT	
	PLOT DATE = 8/17/2012	CHECKED - MRB/AAY	REVISED -		SHEET NO. 501 OF 5029 SHEETS				

X:\100020S\10056\Engineering_Documents_Phase_II\MortonOver174\Final\0900141_68620_01_gpe.dgn 2:51:16 PM 8/17/2012

GENERAL NOTES:

1. Fasteners shall be ASTM A325 Type 1, mechanically galvanized bolts. Bolts $^{3}/_{4}$" ϕ. holes $^{15}/_{16}$" ϕ, unless otherwise noted.

2. No field welding is permitted except as specified in the contract documents.

3. Reinforcement bars designated (E) shall be epoxy coated.

4. The Inorganic Zinc Rich Primer / Acrylic / Acrylic Paint System shall be used for shop and field painting of new structural steel except where otherwise noted. The color of the final finish coat for all interior steel surfaces shall be blue, Munsell No. 10B 3/6.

5. The Contractor shall exercise care during removal of existing joints to ensure that the slab, beams and diaphragms' integrity will not be detrimentally impacted. The Contractor shall repair any damage(s) to the slab, beams and diaphragms caused by his operation as directed by the Engineer at no additional cost to the Department.

6. Prior to pouring the new concrete deck, all heavy or loose rust, loose mill scale, and other loose or potentially detrimental foreign material shall be removed from the surfaces in contact with concrete. Tightly adhered paint may remain unless otherwise noted. Removal shall be accomplished by methods that will not damage the steel and the cost will be included in the pay item covering removal of the existing concrete.

   As directed by the Engineer, existing construction accessories welded to the top flange of beams and girders shall be removed. The weld areas shall be ground flush and inspected for cracks using magnetic particle testing (MT) or dye penetrant testing (PT) by qualified personnel approved by the Engineer. Any cracks that can not be removed by grinding $^{1}/_{4}$ in. deep shall be identified and reported to the Bureau of Bridges and Structures for further disposition. The cost of removing welded accessories, grinding and inspecting weld areas and grinding cracks will be paid for according to Article 109.04 of the Standard Specifications.

7. Plan dimensions and details relative to existing plans are subject to nominal construction variations. The contractor shall field verify existing dimensions and details affecting new construction and make necessary approved adjustments prior to construction or ordering of materials. Such variations shall not be cause for additional compensation for a change in scope of the work, however, the Contractor will be paid for the quantity actually furnished at the unit price bid for the work.

8. Strip Seal Expansion Joint shall be hot dipped galvanized.

9. No temporary joint seal is required if work is completed prior to winter shutdown. If work is not completed then joint opening should be temporarily sealed at no additional cost to the Department.

10. For proposed underdeck lighting, see Lighting Plans.

11. For coordination of the bridge removal and construction stages specified herein with the overall project staging, see the Project Staging Coordination Table on this sheet.

12. The existing structural steel coating contains lead. The Contractor shall take appropriate precautions to deal with the presence of lead on this project.

13. Existing structural steel in contact with new structural steel shall be cleaned and painted prior to erection as required by the Special Provision, "Cleaning and Painting Contact Surface Areas of Existing Steel Structures."

14. Diaphragm connection holes shall be $^{15}/_{16}$" ϕ for $^{3}/_{4}$" ϕ H.S. bolts. Two hardened washers are required for each set of oversized holes.

15. Joint openings shall be adjusted according to Article 520.04 of the Standard Specifications when the blockout is cast at an ambient temperature other than 50°F.

INDEX OF SHEETS

SD1	General Plan and Elevation
SD2	General Data
SD3	Stage Construction Details 1 of 2
SD4	Stage Construction Details 2 of 2
SD5	Removal Details
SD6	Deck Reinforcement Plan 1 of 2
SD7	Deck Reinforcement Plan 2 of 2
SD8	Expansion Joint Details 1 of 3
SD9	Expansion Joint Details 2 of 3
SD10	Expansion Joint Details 3 of 3
SD11	Partial Framing Plan and Details 1 of 2
SD12	Partial Framing Plan and Details 2 of 2
SD13	Preformed Joint Strip Seal
SD14	Bar Splicer Assembly Details
SD15	Existing Plans
SD16	Existing Plans
SD17	Existing Plans
SD18	Existing Plans
SD19	Existing Plans
SD20	Existing Plans
SD21	Existing Plans
SD22	Existing Plans
SD23	Existing Plans
SD24	Existing Plans
SD25	Existing Plans
SD26	Existing Plans
SD27	Existing Plans
SD28	Existing Plans
SD29	Existing Plans

TOTAL BILL OF MATERIAL

ITEM	UNIT	TOTAL
Concrete Removal	Cu. Yd.	149.7
Protective Shield	Sq. Yd.	358
Concrete Superstructure	Cu. Yd.	87.1
Bridge Deck Grooving	Sq. Yd.	508
Protective Coat	Sq. Yd.	978
Furnishing and Erecting Structural Steel	Pound	4,010
Reinforcement Bars, Epoxy Coated	Pound	16,440
Bar Splicers	Each	40
Preformed Joint Strip Seal	Foot	209.5

PROJECT STAGING COORDINATION TABLE

Bridge Removal or Construction Stage	Overall Project Stage
Stage I	Pre-Stage
Stage II	Stage 1
Stage III	Stage 4
Stage IV	Stage 14

benesch engineers · scientists · planners
Alfred Benesch & Company
205 North Michigan Avenue, Suite 2400
Chicago, Illinois 60601
312-565-0450 Job No. 10056

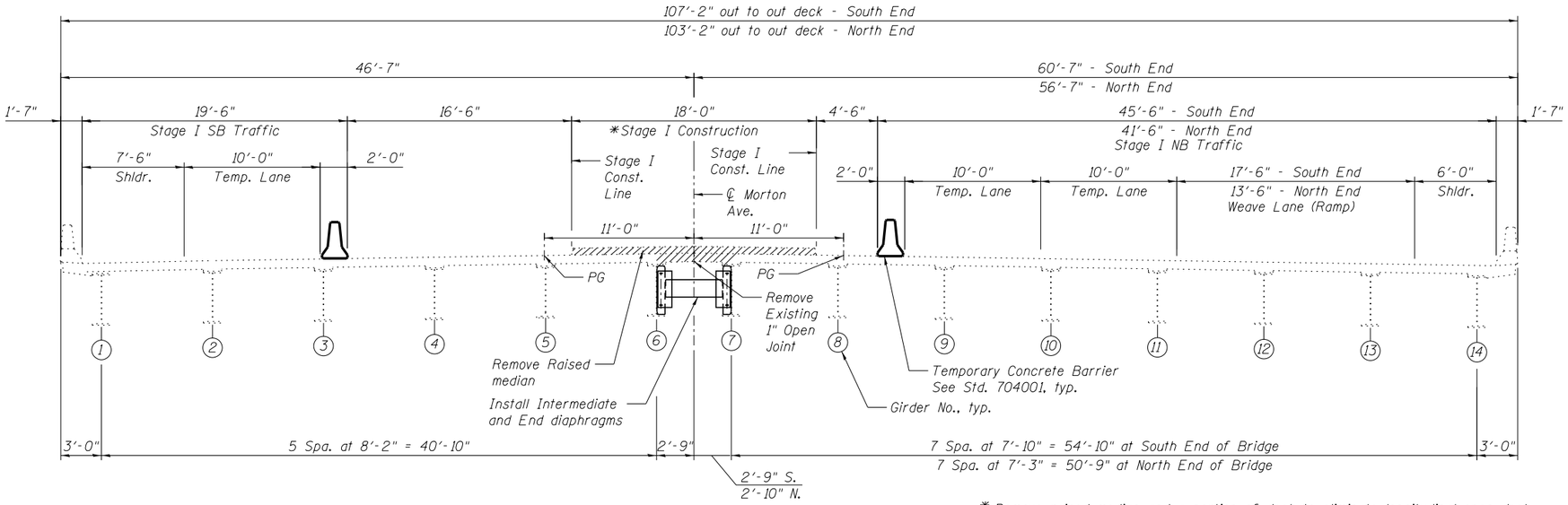

STAGE I CROSS SECTION

(Looking North)

* Remove raised median and a portion of deck to eliminate longitudinal open deck joint. Remove existing median portion of the existing preformed joint seal device at abutments. Reconstruct the deck and install the preformed joint strip rails without the strip seal and provide a deck surface flush with the existing deck on each side and along the median portion of the deck. Reconstructed length is 6" less than Stage I Construction limit shown (see Sheet SD8 for details). Install intermediate and end diaphragms between girders 6 & 7.

LEGEND

Removal area

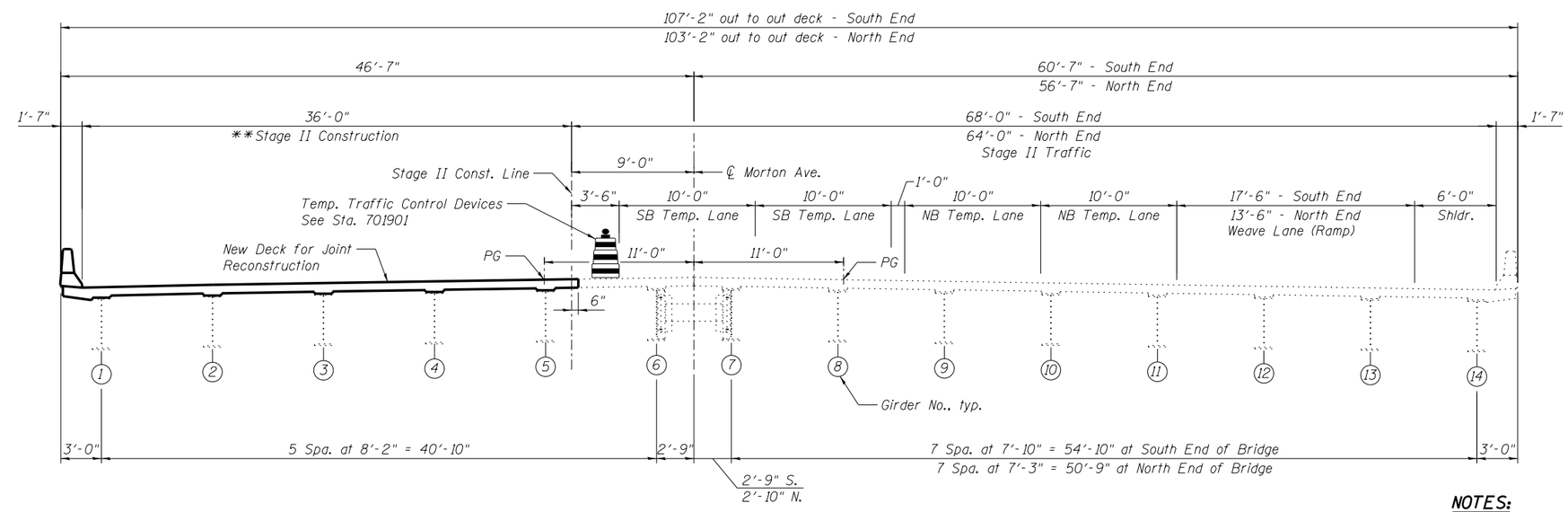

STAGE II CROSS SECTION

(Looking North)

** Remove existing southbound portion of the existing preformed joint strip seal device at abutments. Reconstruct the deck and install the preformed joint strip rails without the strip seal. Reconstructed length extends 6" beyond the Stage II Const. Line (see Sheet SD8 for details).

NOTES:

1. For quantity of Temporary Concrete Barrier, see Roadway Plans.
2. Temporary Concrete Barrier shall not be anchored into existing deck.
3. See Roadway Plans for detailed maintenance of traffic plans.

benesch engineers · scientists · planners
Alfred Benesch & Company
205 North Michigan Avenue, Suite 2400
Chicago, Illinois 60601
312-565-0450 Job No. 10056

FILE NAME = 0900141_68620_03_stgI.dgn	USER NAME = mbecker	DESIGNED - JDC	REVISED -
		CHECKED - MRB/AAY	REVISED -
	PLOT SCALE =	DRAWN - PRT	REVISED -
	PLOT DATE = 7/16/2012	CHECKED - MRB/AAY	REVISED -

STATE OF ILLINOIS
DEPARTMENT OF TRANSPORTATION

STAGE CONSTRUCTION DETAILS 1 OF 2
STRUCTURE NO. 090-0141

SHEET NO. SD3 OF SD29 SHEETS

F.A.I. RTE.	SECTION	COUNTY	TOTAL SHEETS	SHEET NO.
74	90-(14R;(14HB-4,14,14HVB)BR)	TAZEWELL	2433	2042

CONTRACT NO. 68620

ILLINOIS FED. AID PROJECT

X:\10000S\10056\Engineering_Documents_Phase_II\MortonOver174\Final\0900141_68620_03_stgI.dgn 7:36:14 AM 7/16/2012

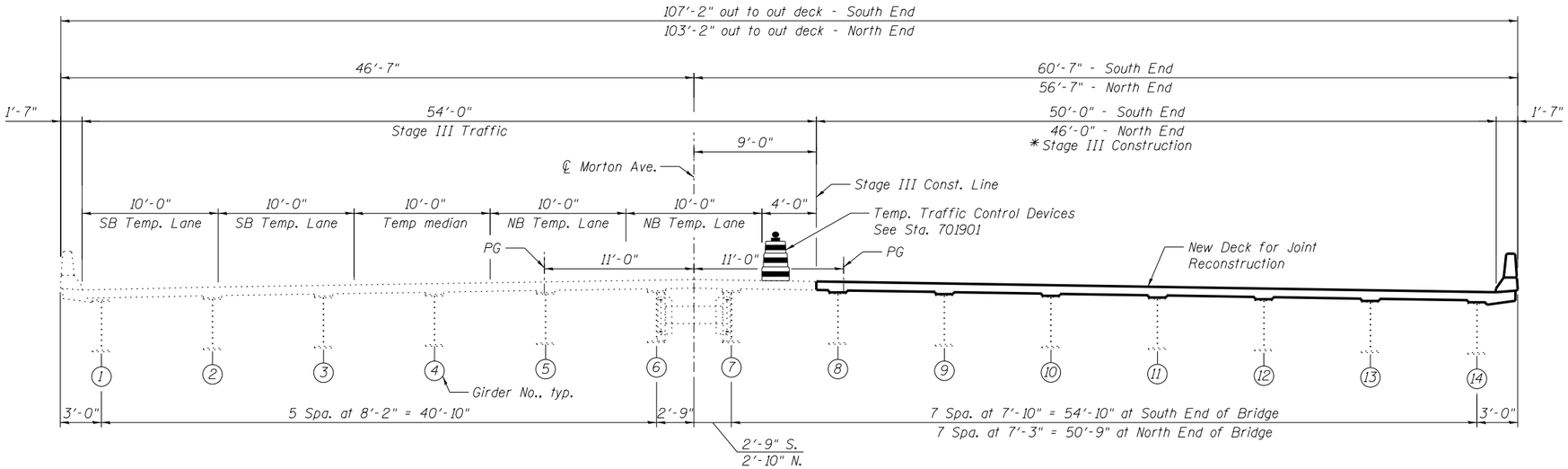

STAGE III CROSS SECTION

(Looking North)

* Remove existing northbound portion of the existing preformed joint strip seal device at abutments. Reconstruct the deck and install the preformed joint strip seal device and the permanent strip seal along the width of the deck and barriers for each expansion joint.

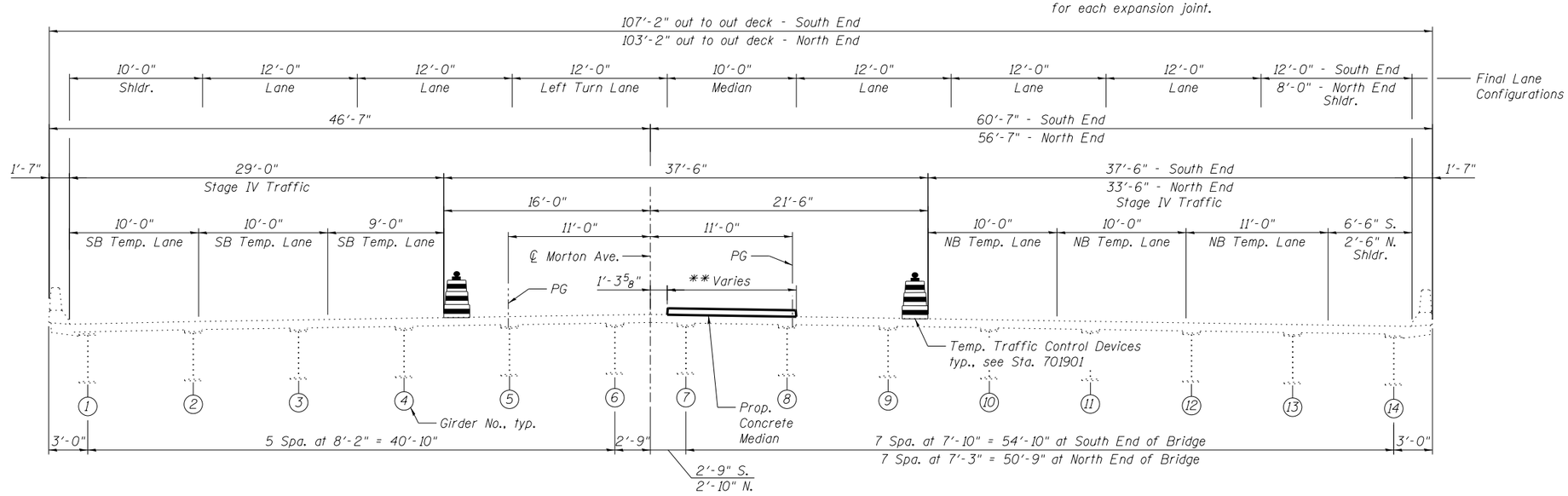

STAGE IV CROSS SECTION

(Looking North)

** Stage IV Construction varies 3'-10½" to 10'-0"

NOTES:

1. See Roadway Plans for detailed maintenance of traffic plans.

benesch
engineers · scientists · planners
Alfred Benesch & Company
205 North Michigan Avenue, Suite 2400
Chicago, Illinois 60601
312-565-0450 Job No. 10056

FILE NAME = 0900141_68620_04_stg2.dgn	USER NAME = mbecker	DESIGNED - JDC	REVISED -
		CHECKED - MRB/AAY	REVISED -
	PLOT SCALE =	DRAWN - JDC	REVISED -
	PLOT DATE = 7/16/2012	CHECKED - MRB/AAY	REVISED -

STATE OF ILLINOIS
DEPARTMENT OF TRANSPORTATION

STAGE CONSTRUCTION DETAILS 2 OF 2
STRUCTURE NO. 090-0141
SHEET NO. SD4 OF SD29 SHEETS

F.A.I. RTE.	SECTION	COUNTY	TOTAL SHEETS	SHEET NO.
74	90-(14R;(14HB-4,14,14HVB)BR)	TAZEWELL	2433	2043

CONTRACT NO. 68620
ILLINOIS FED. AID PROJECT

X:\100005\10056\Engineering_Documents_Phase_II\MortonOver174\Final\0900141_68620_04_stg2.dgn 7:36:15 AM 7/16/2012

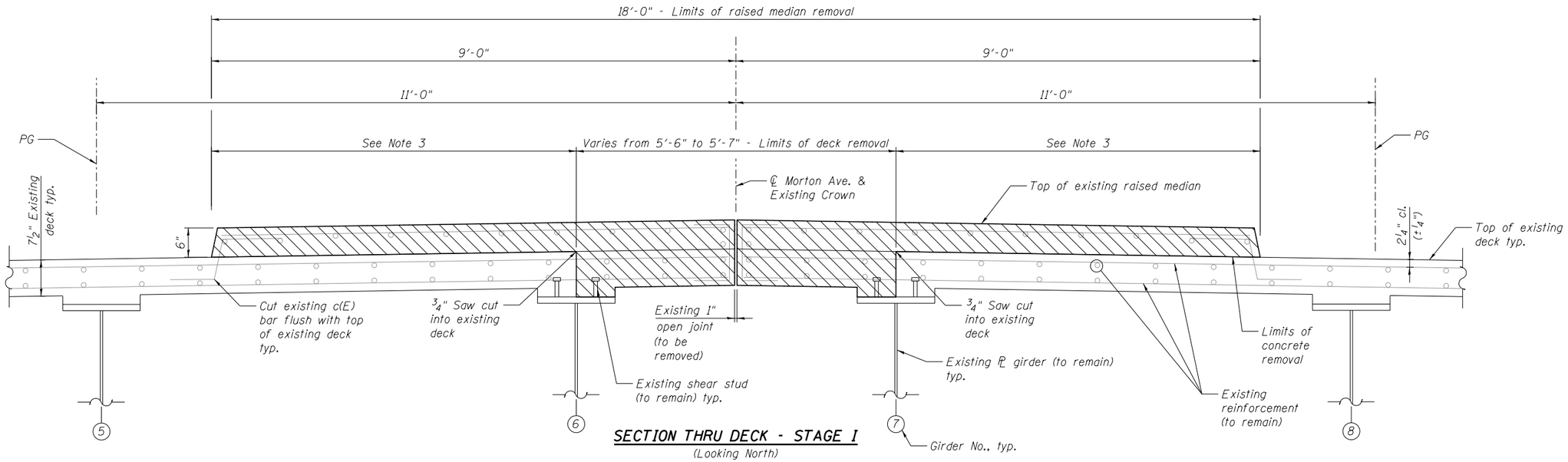

SECTION THRU DECK - STAGE I

(Looking North)

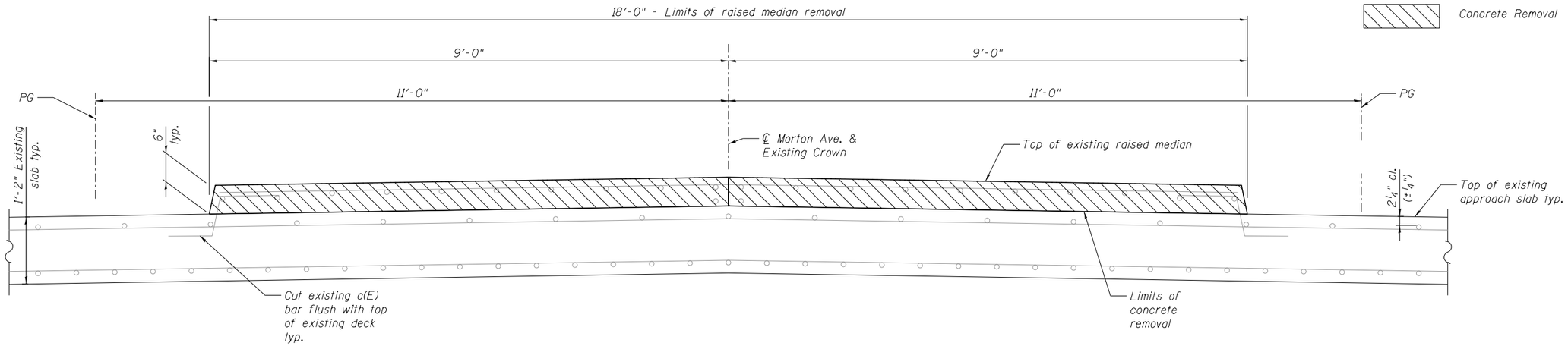

SECTION THRU VAULTED SPAN - STAGE I

(Looking North)

NOTES:

1. See General Plan and Elevation for removal limits of existing raised median.
2. Existing shear studs shall be cleaned and left intact. Cost included with Concrete Removal.
3. The final ¼" of existing concrete shall be removed using equipment capable of producing a bridge deck elevation consistent with the profile of the existing deck. Any peeks, spalls, or gouges greater than ¼" shall be removed or repaired prior to bridge deck grooving. Cost included with Concrete Removal.

benesch engineers · scientists · planners
Alfred Benesch & Company
205 North Michigan Avenue, Suite 2400
Chicago, Illinois 60601
312-565-0450 Job No. 10056

FILE NAME = 0900141_68620.05_reml.dgn	USER NAME = mbecker	DESIGNED - JDC	REVISED -	STATE OF ILLINOIS DEPARTMENT OF TRANSPORTATION	REMOVAL DETAILS STRUCTURE NO. 090-0141	F.A.I. RTE.	SECTION	COUNTY	TOTAL SHEETS / SHEET NO.
		CHECKED - MRB/AAY	REVISED -			74	90-[14R;(14HB-4,14,14HVB)BR]	TAZEWELL	2433 / 2044
	PLOT SCALE =	DRAWN - PRT	REVISED -					CONTRACT NO. 68620	
	PLOT DATE = 7/16/2012	CHECKED - MRB/AAY	REVISED -		SHEET NO. SD5 OF SD29 SHEETS		ILLINOIS FED. AID PROJECT		

X:\10000S\10056\Engineering_Documents_Phase_II\MortonOverI74\Final\0900141_68620.05_reml.dgn 7:36:16 AM 7/16/2012

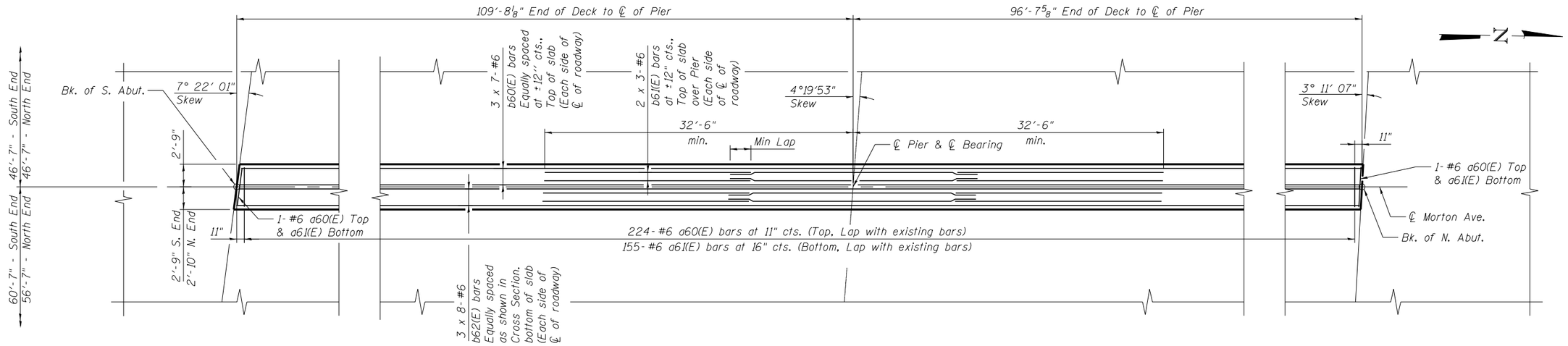

PLAN - STAGE I

MINIMUM BAR LAP
(Deck)
#5 bar = 3'-3"
#6 bar = 3'-10"

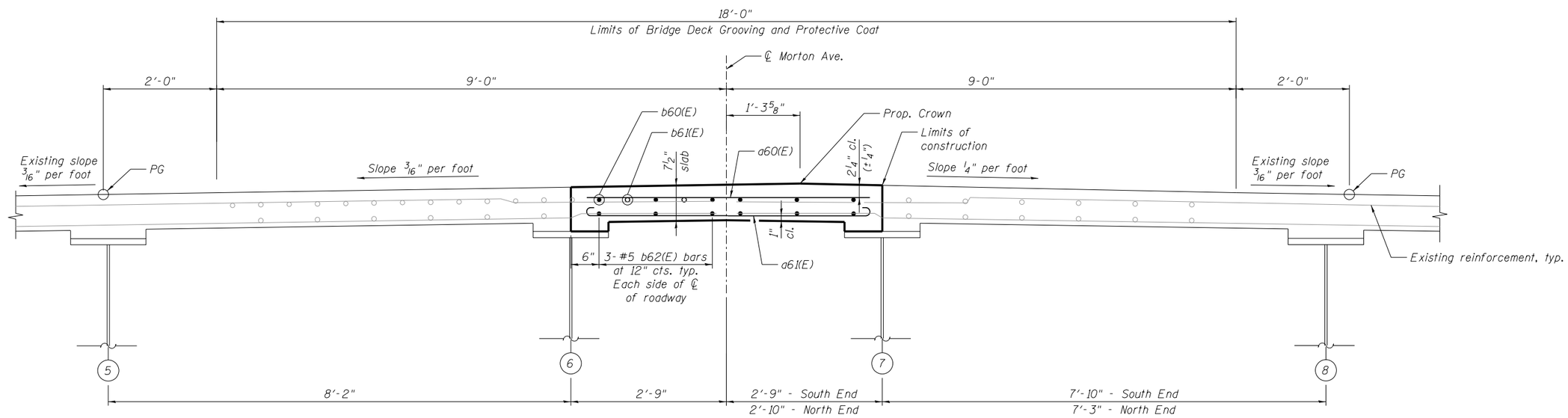

CROSS SECTION - STAGE I

(Looking North)
Diaphragm not shown for clarity

NOTES:

1. Bars indicated thus 6 x 7 - #5 etc. indicates 6 lines of bars with 7 lengths per line.
2. Existing reinforcement bars extending into the concrete removal area shall be blast-cleaned, straightened and incorporated into the new construction. Any reinforcement bars that are damaged during concrete removal shall be repaired or replaced with an approved bar splicer or anchorage system. Cost included with Concrete Removal.

benesch
engineers · scientists · planners
Alfred Benesch & Company
205 North Michigan Avenue, Suite 2400
Chicago, Illinois 60601
312-565-0450 Job No. 10056

FILE NAME = 0900141_68620.06_dkpl1.dgn	USER NAME = mbecker	DESIGNED - JDC	REVISED -
		CHECKED - MRB/AAY	REVISED -
	PLOT SCALE =	DRAWN - PRT	REVISED -
	PLOT DATE = 7/16/2012	CHECKED - MRB/AAY	REVISED -

STATE OF ILLINOIS
DEPARTMENT OF TRANSPORTATION

DECK REINFORCEMENT PLAN 1 OF 2
STRUCTURE NO. 090-0141
SHEET NO. SD6 OF SD29 SHEETS

F.A.I. RTE.	SECTION	COUNTY	TOTAL SHEETS	SHEET NO.
74	90-[14R;14HB-4,14,14HVB]BR1	TAZEWELL	2433	2045
		CONTRACT NO. 68620		
		ILLINOIS FED. AID PROJECT		

X:\10000S\10056\Engineering_Documents_Phase_II\MortonOverI74\Final\0900141_68620.06_dkpl1.dgn 7:36:17 AM 7/16/2012

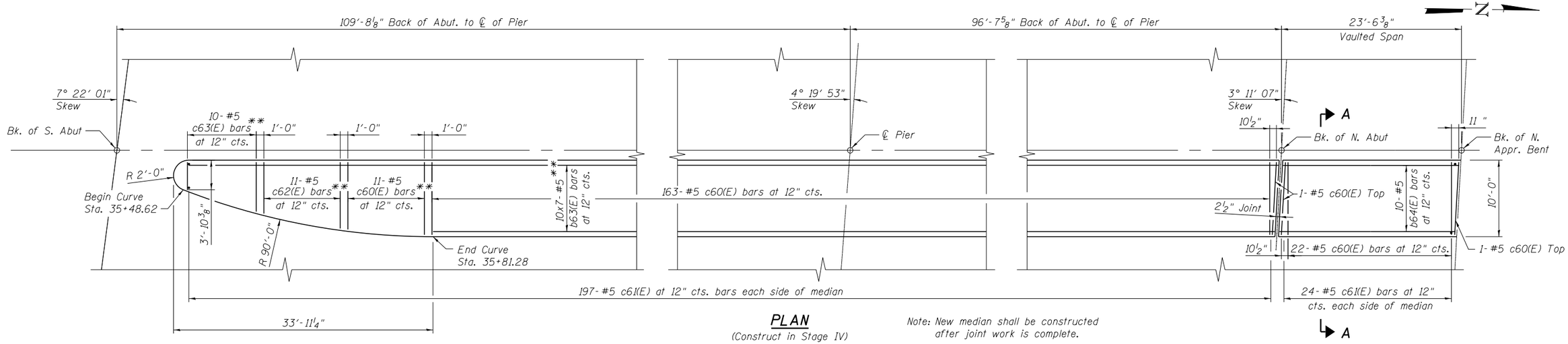

PLAN

(Construct in Stage IV)

Note: New median shall be constructed after joint work is complete.

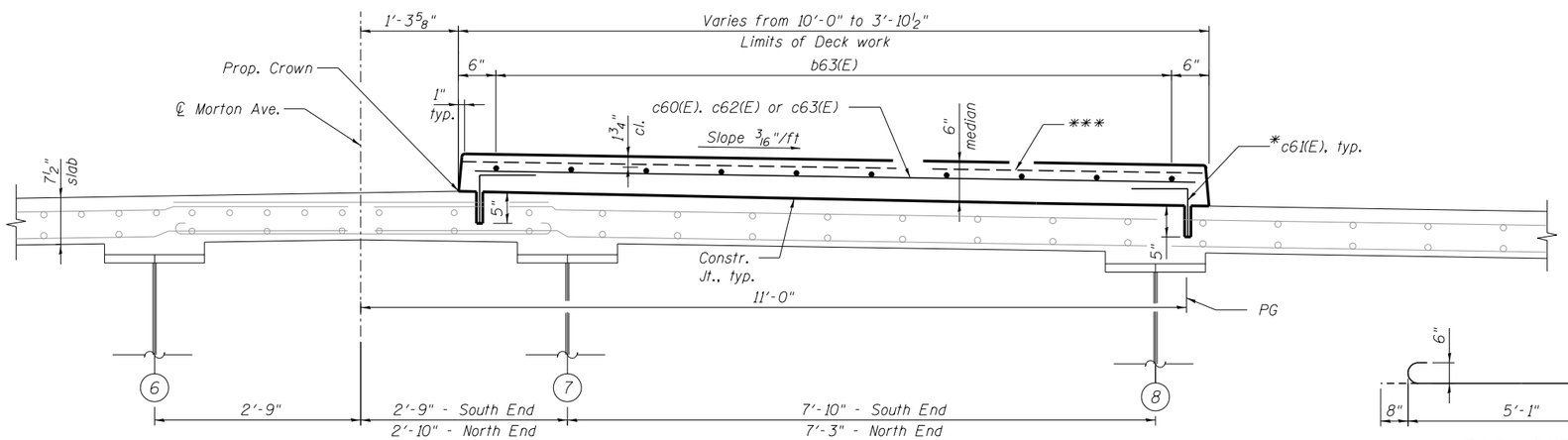

CROSS SECTION

(Looking North)

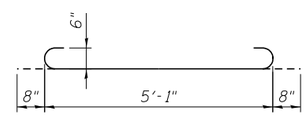

BAR a61(E)

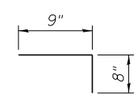

BAR c61(E)

STAGE I THRU IV
BILL OF MATERIAL

Bar	No.	Size	Length	Shape
a60(E)	226	#6	5'-2"	
a61(E)	157	#6	6'-5"	
b60(E)	42	#6	32'-10"	
b61(E)	12	#6	24'-3"	
b62(E)	48	#6	29'-3"	
b63(E)	70	#5	31'-3"	
b64(E)	10	#5	23'-2"	
c60(E)	199	#5	9'-6"	
c61(E)	442	#5	1'-5"	
c62(E)	11	#5	8'-8"	
c63(E)	10	#5	6'-6"	
Concrete Removal			Cu. Yd.	130.9
Concrete Superstructure			Cu. Yd.	70.2
Reinforcement Bars, Epoxy Coated			Pound	13,200

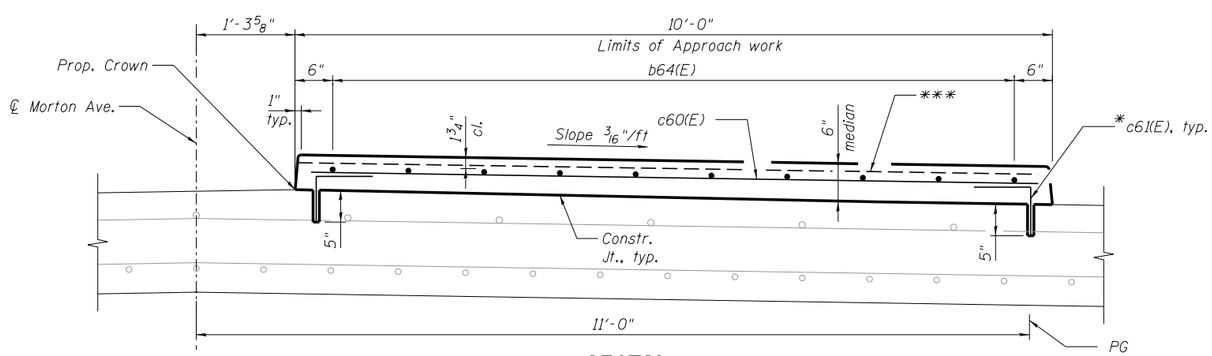

SECTION A-A

MINIMUM BAR LAP

(Deck)

#5 bar = 3'-3"
#6 bar = 3'-10"

* Drill and grout #5 c61(E) bars according to Article 584 of the Standard Specifications. Maximum depth of hole shall not exceed 6". Cost to be included in Reinforcement Bars, Epoxy Coated.

** Order b63(E), c60(E), c62(E), and c63(E) bars full length. Cut to fit curve of median.

*** 1/4" x 3/4" Formed joints with bridge relief joint sealer at pier and two contraflexure points (match existing parapet locations).

NOTES:

1. Bars indicated thus 10x7- #5 etc. indicates 10 lines of bars with 7 lengths per line.
2. Raised median shall be constructed at Stage IV.

benesch
engineers · scientists · planners
Alfred Benesch & Company
205 North Michigan Avenue, Suite 2400
Chicago, Illinois 60601
312-565-0450 Job No. 10056

FILE NAME = 0900141_68620_07_dkpl2.dgn	USER NAME = mbecker	DESIGNED - JDC	REVISED -
		CHECKED - MRB/AAY	REVISED -
	PLOT SCALE =	DRAWN - PRT	REVISED -
	PLOT DATE = 7/16/2012	CHECKED - MRB/AAY	REVISED -

STATE OF ILLINOIS
DEPARTMENT OF TRANSPORTATION

DECK REINFORCEMENT PLAN 2 OF 2
STRUCTURE NO. 090-0141

SHEET NO. SD7 OF SD29 SHEETS

F.A.I. RTE.	SECTION	COUNTY	TOTAL SHEETS	SHEET NO.
74	90-(14R;(14HB-4,14,14HVB)BR)	TAZEWELL	2433	2046
		CONTRACT NO. 68620		
		ILLINOIS FED. AID PROJECT		

X:\100005\10056\Engineering_Documents_Phase_II\MortonOver174\Final\0900141_68620_07_dkpl2.dgn 7:36:18 AM 7/16/2012

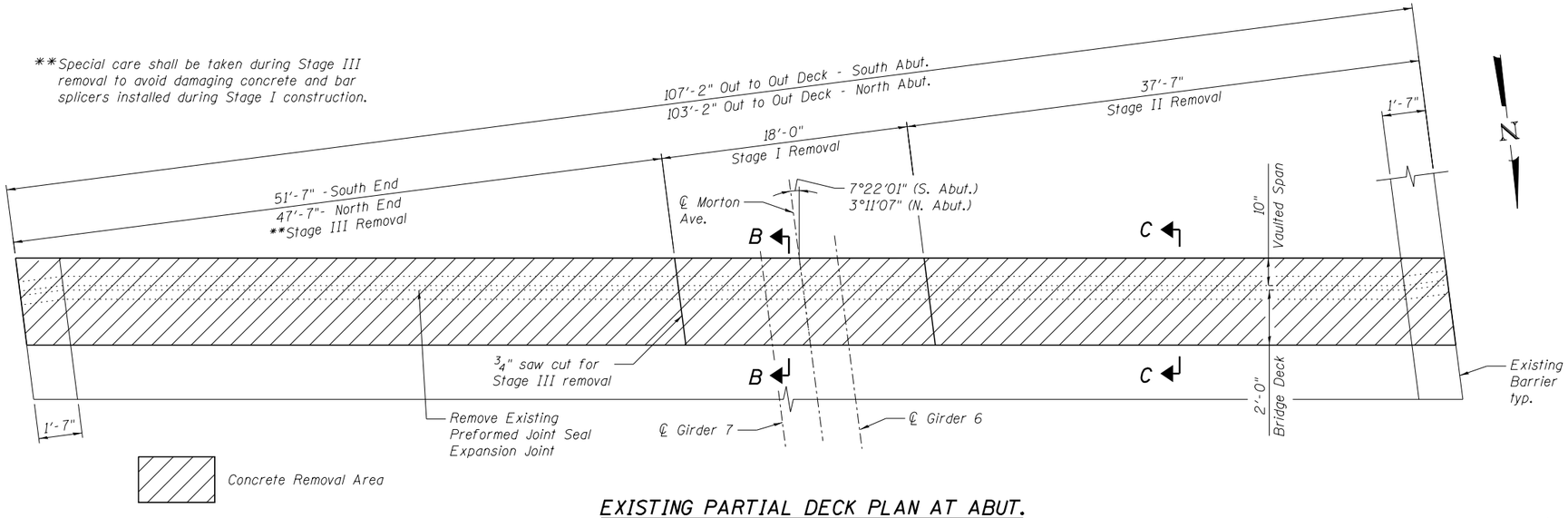

EXISTING PARTIAL DECK PLAN AT ABUT.

(S. Abut. Shown, N. Abut. similar except as noted)

BILL OF MATERIAL

Bar	No.	Size	Length	Shape
a70(E)	4	#6	17'-2"	
a71(E)	16	#5	17'-2"	
a72(E)	8	#6	21'-0"	
a73(E)	32	#5	20'-9"	
a74(E)	8	#6	27'-10"	
a75(E)	32	#5	27'-6"	
d70(E)	20	#4	5'-3"	
d71(E)	20	#5	3'-11"	
x70(E)	210	#5	2'-3"	
Concrete Removal			Cu. Yd.	18.8
Concrete Superstructure			Cu. Yd.	16.9
Reinforcement Bars, Epoxy Coated			Pound	3,240

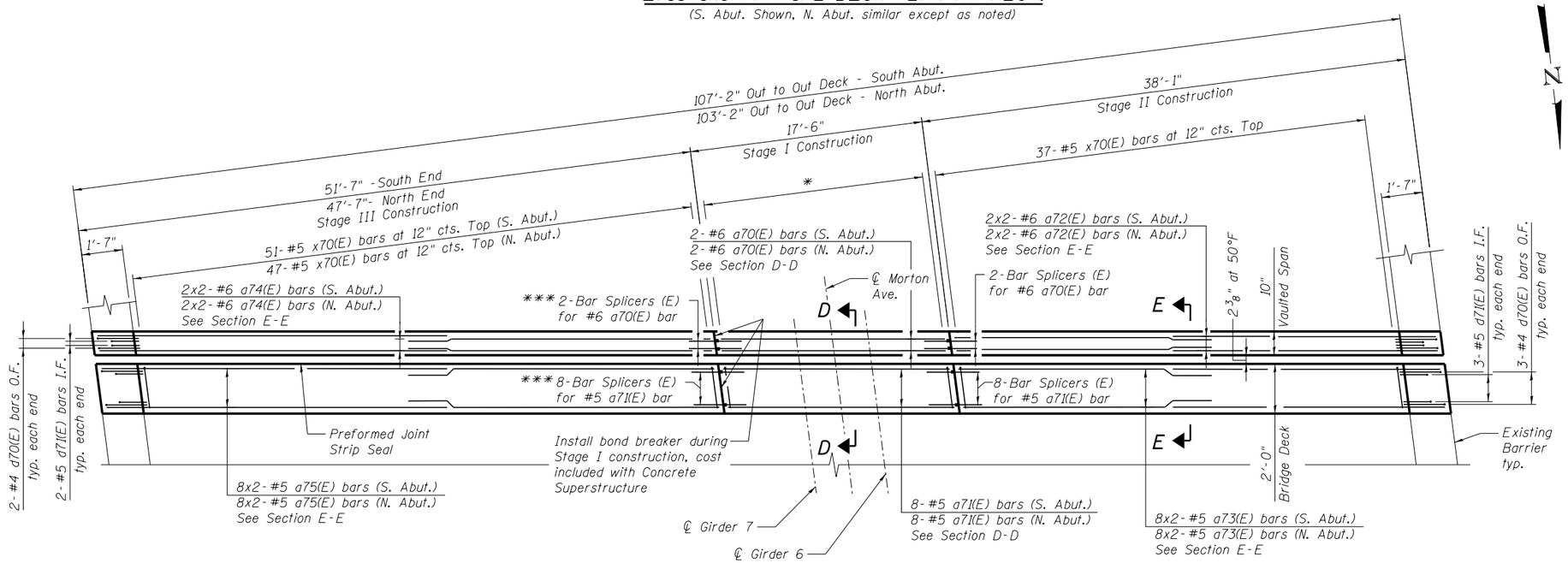

PROPOSED PARTIAL DECK PLAN AT ABUT.

(S. Abut. Shown, N. Abut. similar except as noted)

*19-#5 x70(E) bars at 12" cts. Top

***Threaded couplers shall be plugged during Stage I to prevent concrete infiltration. Cost included with Bar Splicers.

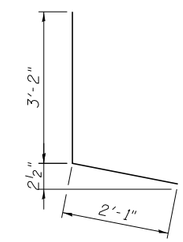

BAR d70(E)

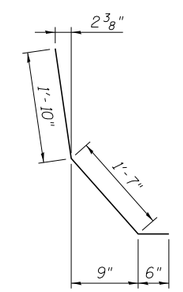

BAR d71(E)

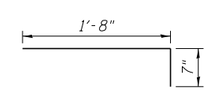

BAR x70(E)

MINIMUM BAR LAP

#5 bar = 3'-3"
#6 bar = 3'-10"

benesch
engineers · scientists · planners
Alfred Benesch & Company
205 North Michigan Avenue, Suite 2400
Chicago, Illinois 60601
312-565-0450 Job No. 10056

FILE NAME = 0900141_68620_08_exjt1.dgn	USER NAME = mbecker	DESIGNED - JDC	REVISED -
		CHECKED - MRB/AAY	REVISED -
	PLOT SCALE =	DRAWN - JDC	REVISED -
	PLOT DATE = 7/16/2012	CHECKED - MRB/AAY	REVISED -

STATE OF ILLINOIS
DEPARTMENT OF TRANSPORTATION

EXPANSION JOINT DETAILS 1 OF 3
STRUCTURE NO. 090-0141
SHEET NO. SD8 OF SD29 SHEETS

F.A.I. RTE.	SECTION	COUNTY	TOTAL SHEETS	SHEET NO.
74	90-[14R;(14HB-4,14,14HVB)BR]	TAZEWELL	2433	2047

CONTRACT NO. 68620
ILLINOIS FED. AID PROJECT

X:\10000S\10056\Engineering_Documents_Phase_II\MortonOver174\Final\0900141_68620_08_exjt1.dgn 7:36:19 AM 7/16/2012

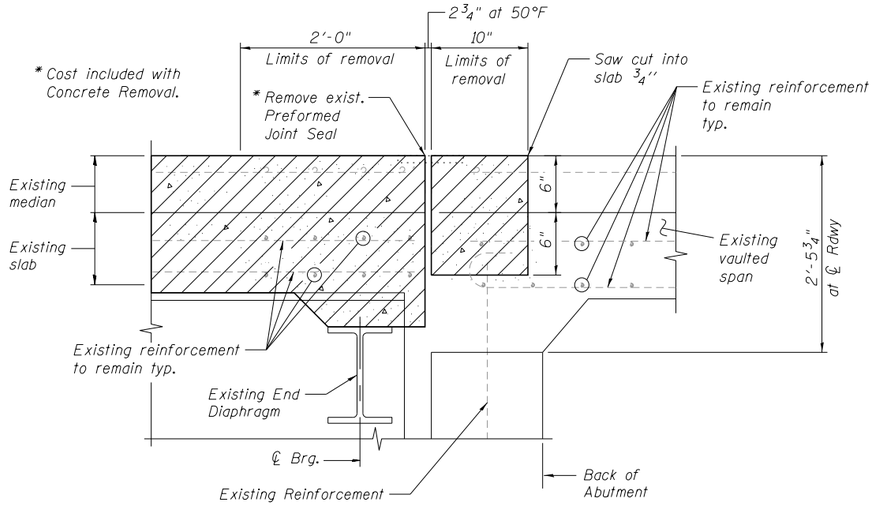

SECTION B-B
(Stage I only)

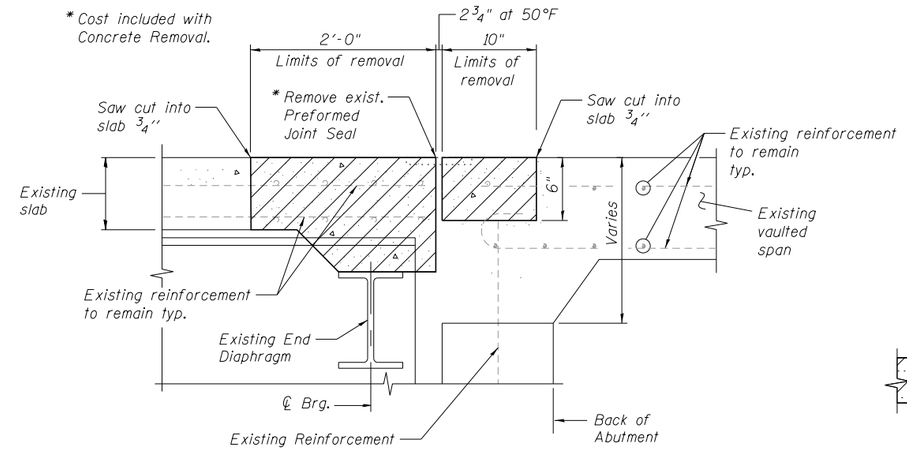

SECTION C-C

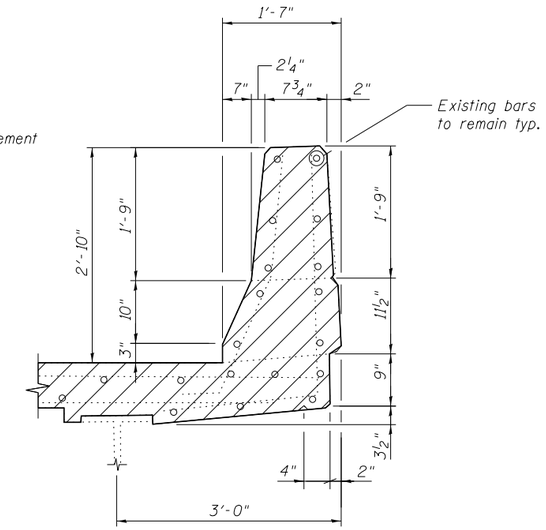

EXISTING PARAPET SECTION

Concrete Removal Area

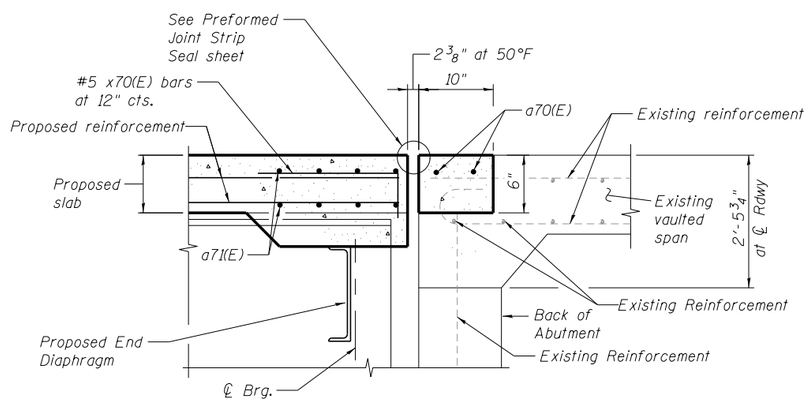

SECTION D-D
(Stage I only)

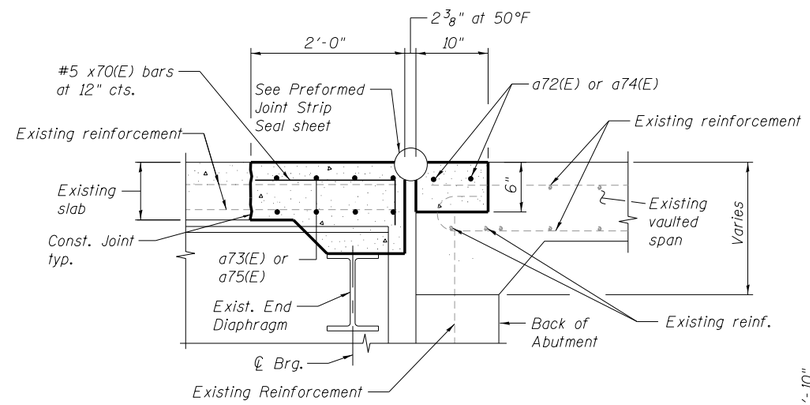

SECTION E-E

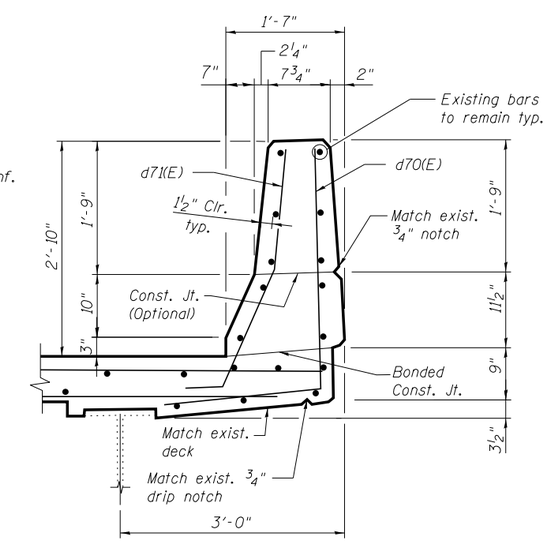

PROPOSED PARAPET SECTION

benesch
engineers · scientists · planners
Alfred Benesch & Company
205 North Michigan Avenue, Suite 2400
Chicago, Illinois 60601
312-565-0450 Job No. 10056

FILE NAME = 0900141_68620.09_exjt2.dgn	USER NAME = mbecker	DESIGNED - JDC	REVISED -
		CHECKED - MRB/AAY	REVISED -
	PLOT SCALE =	DRAWN - JDC	REVISED -
	PLOT DATE = 7/16/2012	CHECKED - MRB/AAY	REVISED -

STATE OF ILLINOIS
DEPARTMENT OF TRANSPORTATION

EXPANSION JOINT DETAILS 2 OF 3
STRUCTURE NO. 090-0141
SHEET NO. SD9 OF SD29 SHEETS

F.A.I. RTE.	SECTION	COUNTY	TOTAL SHEETS	SHEET NO.
74	90-[14R;(14HB-4,14,14HVB)BR]	TAZEWELL	2433	2048
		CONTRACT NO. 68620		
	ILLINOIS	FED. AID PROJECT		

X:\100005\10056\Engineering_Documents_Phase_II\MortonOver174\Final\0900141_68620_09_exjt2.dgn 7:36:21 AM 7/16/2012

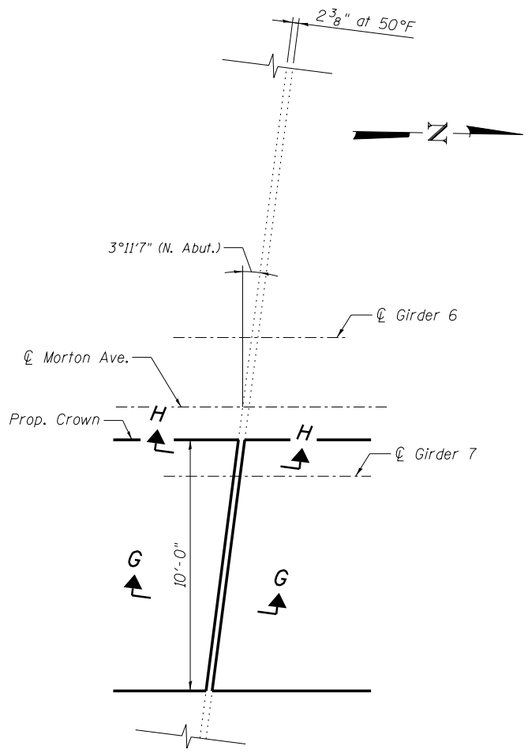

PROPOSED PARTIAL DECK PLAN
AT N. ABUT. - STAGE IV

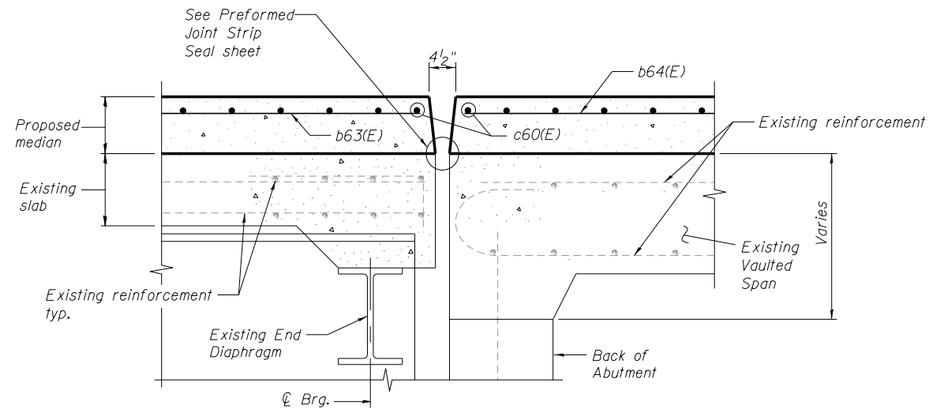

SECTION G-G

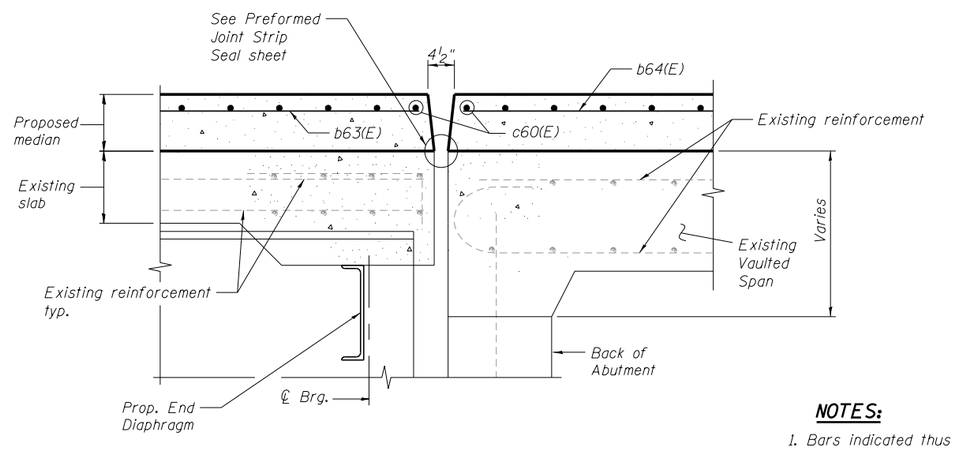

SECTION H-H

NOTES:

1. Bars indicated thus 8x2-#5 etc. indicates 8 lines of bars with 2 lengths per line.

2. I.F. denotes Inside Face
   O.F. denotes Outside Face

3. Existing reinforcement bars extending into the concrete removal area shall be blast-cleaned, straightened and incorporated into the new construction. Any reinforcement bars that are damaged during concrete removal shall be replaced with an approved bar splicer or anchorage system. Cost included with Concrete Removal.

4. Removal and disposal of the existing expansion joints will not be paid for separately, but shall be included with the cost of Concrete Removal.

5. Existing reinforcement bars in the concrete removal area parallel to the expansion joints shall be removed.

6. If existing name plate falls within the limits of Concrete Removal, it shall be removed and reinstalled in its original location in accordance with IDOT Std. 515001. Cost included in Concrete Superstructure.

7. If existing guardrail and/or end shoe fall within the limits of Concrete Removal, they shall be removed and reinstalled in its original location in accordance with Section 633 of Standard Specifications Cost included in Concrete Superstructure.

benesch
engineers · scientists · planners
Alfred Benesch & Company
205 North Michigan Avenue, Suite 2400
Chicago, Illinois 60601
312-565-0450 Job No. 10056

FILE NAME =	USER NAME = mbecker	DESIGNED - JDC	REVISED -	STATE OF ILLINOIS DEPARTMENT OF TRANSPORTATION	EXPANSION JOINT DETAILS 3 OF 3 STRUCTURE NO. 090-0141	F.A.I. RTE.	SECTION	COUNTY	TOTAL SHEETS / SHEET NO.
		CHECKED - MRB/AAY	REVISED -			74	90-[14R;(14HB-4,14,14HVB)BR]	TAZEWELL	2433 / 2049
0900141_68620_10_exjt3.dgn	PLOT SCALE =	DRAWN - JDC	REVISED -					CONTRACT NO. 68620	
	PLOT DATE = 7/16/2012	CHECKED - MRB/AAY	REVISED -		SHEET NO. SD10 OF SD29 SHEETS		ILLINOIS FED. AID PROJECT		

X:\100000S\10056\Engineering_Documents_Phase_II\MortonOver174\Final\0900141_68620_10_exjt3.dgn 7:36:22 AM 7/16/2012

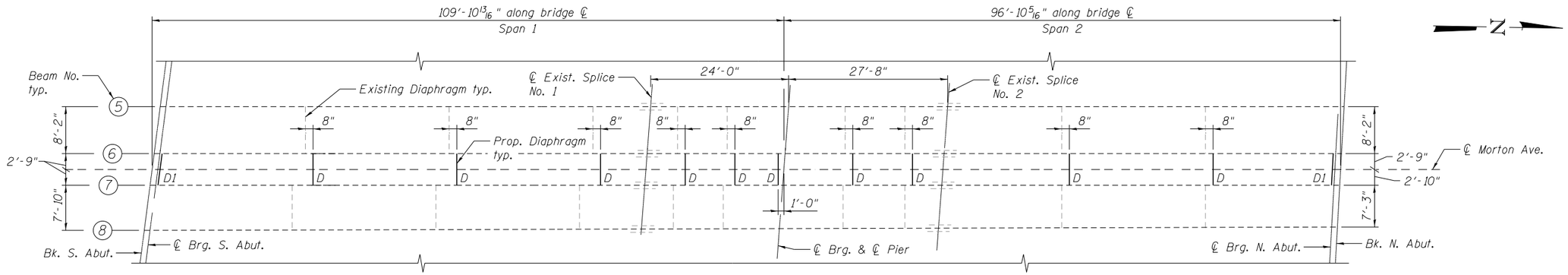

PARTIAL FRAMING PLAN

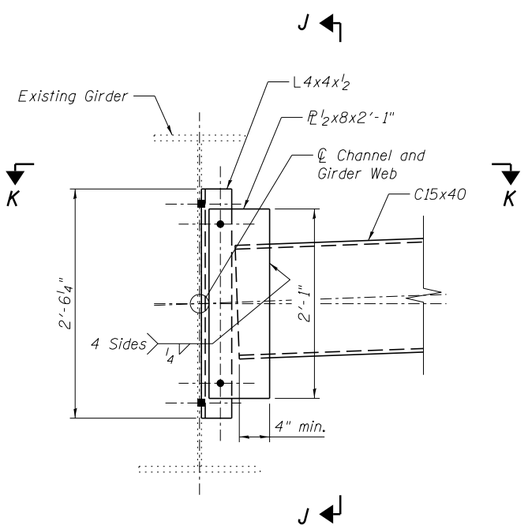

INTERIOR DIAPHRAGM - D

(Looking upstation)

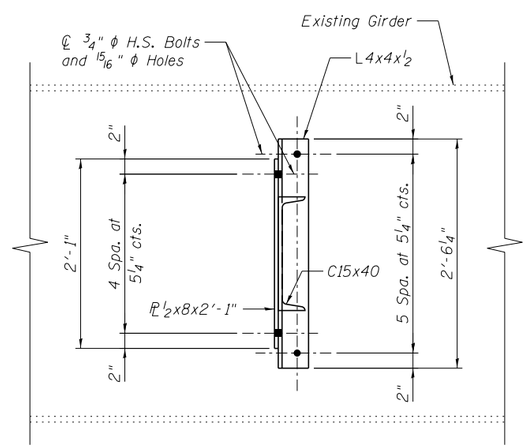

SECTION J-J

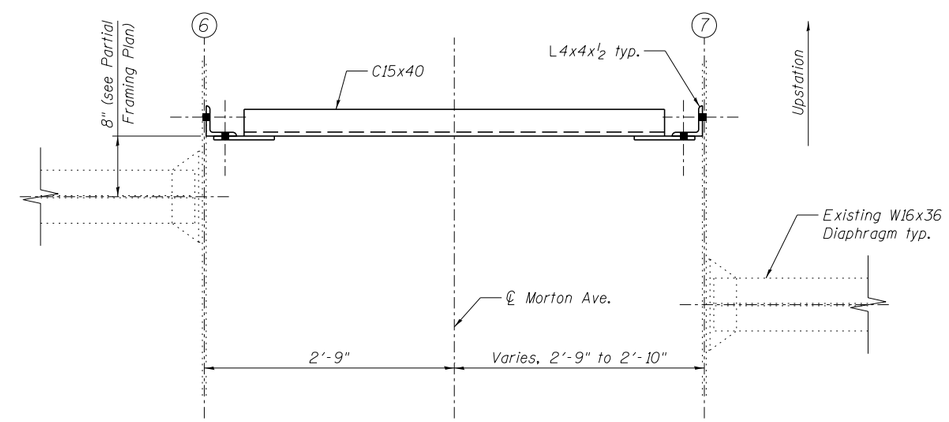

VIEW K-K

(Intermediate diaphragm shown, pier similar)

NOTES:

1. Two hardened washers required for each set of oversized holes.
2. Alternate channels C15x50 are permitted to facilitate material acquisition. Calculated weight of structural steel is based on C15x40 sections. The alternate, if utilized, shall be provided at no extra cost to the department.

benesch engineers · scientists · planners
Alfred Benesch & Company
205 North Michigan Avenue, Suite 2400
Chicago, Illinois 60601
312-565-0450 Job No. 10056

FILE NAME = 0900141_68620_11_frmpl.dgn	USER NAME = mbecker	DESIGNED - JDC	REVISED -
		CHECKED - MRB/AAY	REVISED -
	PLOT SCALE =	DRAWN - PRT	REVISED -
	PLOT DATE = 7/16/2012	CHECKED - MRB/AAY	REVISED -

STATE OF ILLINOIS
DEPARTMENT OF TRANSPORTATION

PARTIAL FRAMING PLAN AND DETAILS 1 OF 2
STRUCTURE NO. 090-0141

SHEET NO. SD11 OF SD29 SHEETS

F.A.I. RTE.	SECTION	COUNTY	TOTAL SHEETS	SHEET NO.
74	90-(14R;(14HB-4,14,14HVB)BR)	TAZEWELL	2433	2050
		CONTRACT NO. 68620		
	ILLINOIS	FED. AID PROJECT		

x:\10000s\10056\engineering_documents_phase_11\MortonOver174\Final\0900141_68620_11_frmpl.dgn 7:36:23 AM 7/16/2012

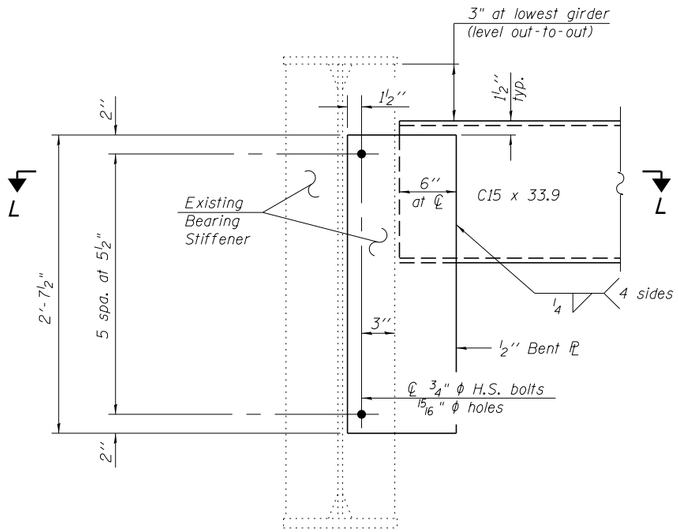

END DIAPHRAGM - D1

(Looking Upstation)

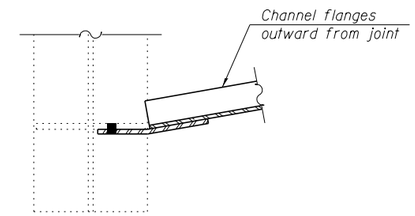

SECTION L-L

NOTES:

1. Two hardened washers required for each set of oversized holes.
2. Calculated weight of structural steel is based on C15x33.9 sections.

benesch
engineers · scientists · planners
Alfred Benesch & Company
205 North Michigan Avenue, Suite 2400
Chicago, Illinois 60601
312-565-0450 Job No. 10056

FILE NAME = 0900141_68620_12_frmpl2.dgn	USER NAME = mbecker	DESIGNED - JDC	REVISED -
		CHECKED - MRB/AAY	REVISED -
	PLOT SCALE =	DRAWN - JDC	REVISED -
	PLOT DATE = 7/16/2012	CHECKED - MRB/AAY	REVISED -

STATE OF ILLINOIS
DEPARTMENT OF TRANSPORTATION

PARTIAL FRAMING PLAN AND DETAILS 2 OF 2
STRUCTURE NO. 090-0141
SHEET NO. SD12 OF SD29 SHEETS

F.A.I. RTE.	SECTION	COUNTY	TOTAL SHEETS	SHEET NO.
74	90-(14R;(14HB-4,14,14HVB)BR)	TAZEWELL	2433	2051
		CONTRACT NO. 68620		
	ILLINOIS	FED. AID PROJECT		

x:\10000s\10056\engineering_documents_phase_ii\MortonOver174\Final\0900141_68620_12_frmpl2.dgn 7:36:24 AM 7/16/2012

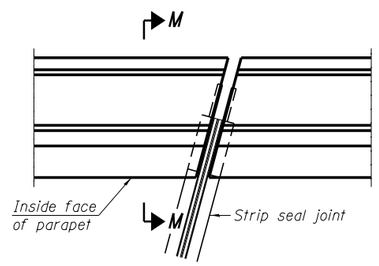

PLAN
(For skews ≤ 30°)

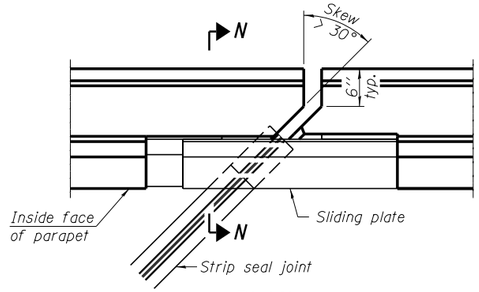

PLAN
(For skews > 30°)
Showing point block

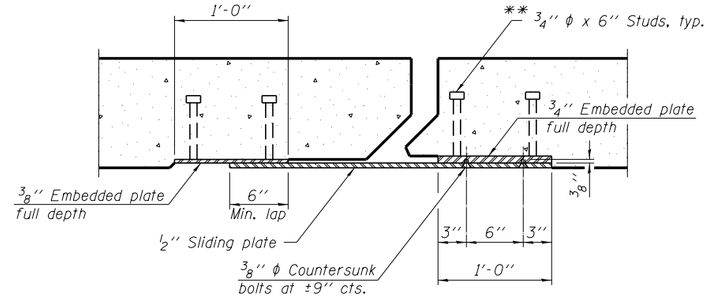

SECTION P-P

** Granular or solid flux filled headed studs conforming to Article 1006.32 of the Std. Specs., automatically end welded.

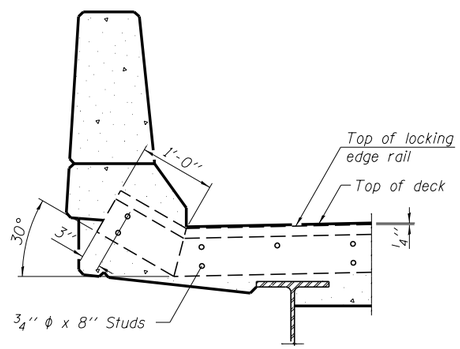

SECTION M-M

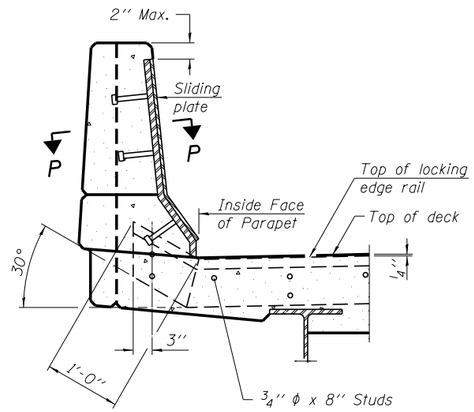

SECTION N-N

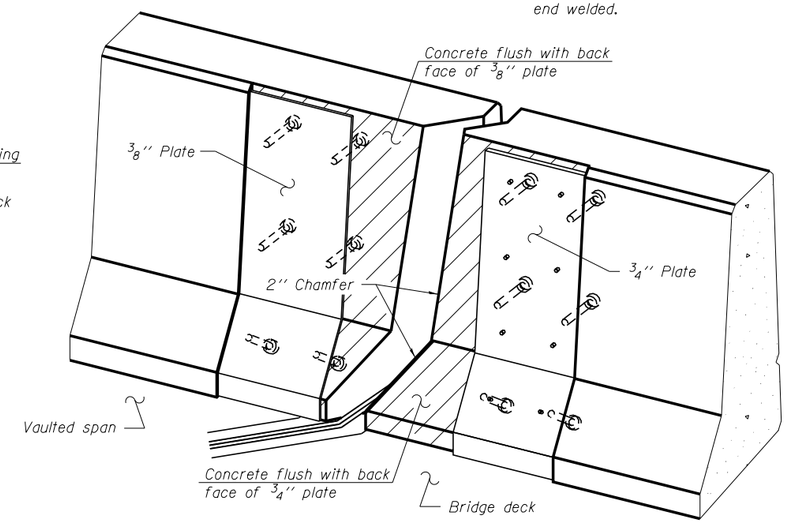

TRIMETRIC VIEW
(Showing back plates only)

Notes:

The strip seal shall be made continuous and shall have a minimum thickness of 1/4". The configuration of the strip seal shall match the configuration of the Locking Edge Rails. Open or "webbed" strip seal gland configurations are not permitted. The gland shall be sized for a maximum rated movement of 4 inches.

The Locking Edge Rails depicted are conceptual only, except for the minimum dimensions shown. The actual configuration of the Locking Edge Rails and matching strip seal may vary from manufacturer to manufacturer. Flanged edge rails will not be allowed. Locking Edge Rails may be spliced at slope discontinuities.

The manufacturer's recommended installation methods shall be followed.

The joint opening and deck dimensions detailed on the superstructure are based on a rolled rail expansion joint.

All steel components shall be galvanized after fabrication according to Article 520.03 of the Standard Specifications.

Maximum space between rail segments shall be 3/16", sealed with a suitable sealant. Joints in rails within 10 ft. of curbs shall be welded.

Parapet plates and anchorage studs for skews > 30° included in the cost of Preformed Joint Strip Seal.

The inside of the Locking Edge Rail groove shall be free of weld residue.

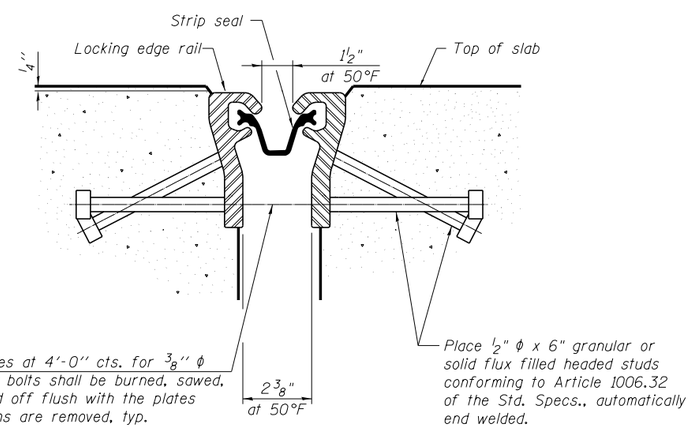

SECTION THRU STRIP SEAL JOINT

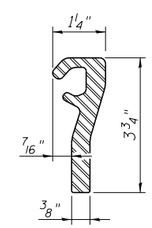

LOCKING EDGE RAIL

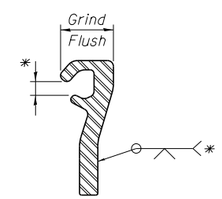

* Omit weld at seal opening

LOCKING EDGE RAIL SPLICE

BILL OF MATERIAL

Item	Unit	Total
Preformed Joint Strip Seal	Foot	209.5

benesch
engineers · scientists · planners
Alfred Benesch & Company
205 North Michigan Avenue, Suite 2400
Chicago, Illinois 60601
312-565-0450 Job No. 10056

FILE NAME = 0900141_68620.13_p_jssd.dgn	USER NAME = mbecker	DESIGNED - JDC	REVISED -
		CHECKED - MRB/AAY	REVISED -
	PLOT SCALE =	DRAWN - JDC	REVISED -
	PLOT DATE = 7/16/2012	CHECKED - MRB/AAY	REVISED -

STATE OF ILLINOIS
DEPARTMENT OF TRANSPORTATION

PREFORMED JOINT STRIP SEAL
STRUCTURE NO. 090-0141

SHEET NO. SD13 OF SD29 SHEETS

F.A.I. RTE.	SECTION	COUNTY	TOTAL SHEETS	SHEET NO.
74	90-(14R;(14HB-4,14,14HVB)BR)	TAZEWELL	2433	2052
		CONTRACT NO. 68620		
	ILLINOIS	FED. AID PROJECT		

7/16/2012 7:36:25 AM X:\10000S\10056\Engineering_Documents_Phase_II\MortonOver174\Final\0900141_68620.13_p_jssd.dgn

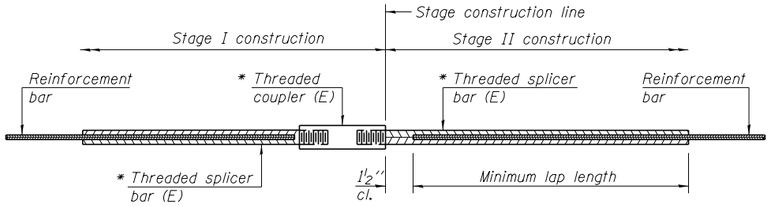

STANDARD BAR SPLICER ASSEMBLY

Minimum Lap Lengths						
Bar size to be spliced	Table 1	Table 2	Table 3	Table 4	Table 5	Table 6
3, 4	1'-5"	1'-11"	2'-1"	2'-4"	2'-7"	2'-11"
5	1'-9"	2'-5"	2'-7"	2'-11"	3'-3"	3'-8"
6	2'-1"	2'-11"	3'-1"	3'-6"	3'-10"	4'-5"
7	2'-9"	3'-10"	4'-2"	4'-8"	5'-2"	5'-10"
8	3'-8"	5'-1"	5'-5"	6'-2"	6'-9"	7'-8"
9	4'-7"	6'-5"	6'-10"	7'-9"	8'-7"	9'-8"

Table 1: Black bar, 0.8 Class C
Table 2: Black bar, Top bar lap, 0.8 Class C
Table 3: Epoxy bar, 0.8 Class C
Table 4: Epoxy bar, Top bar lap, 0.8 Class C
Table 5: Epoxy bar, Class C
Table 6: Epoxy bar, Top bar top, Class C

Threaded splicer bar length = min. lap length + 1½" + thread length

* Epoxy not required on Bar Splicer Assembly components used in conjunction with black bars.

Location	Bar size	No. assemblies required	Table for minimum lap length
Deck at N. Abut.	#5	16	Table 5
	#6	4	Table 5
Deck at S. Abut.	#5	16	Table 5
	#6	4	Table 5

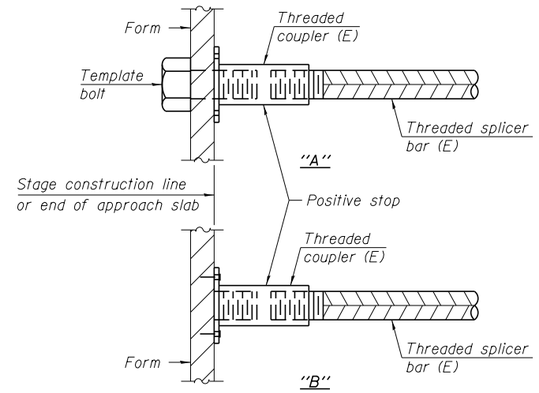

INSTALLATION AND SETTING METHODS

"A" : Set bar splicer assembly by means of a template bolt.
"B" : Set bar splicer assembly by nailing to wood forms or cementing to steel forms.
(E) : Indicates epoxy coating.

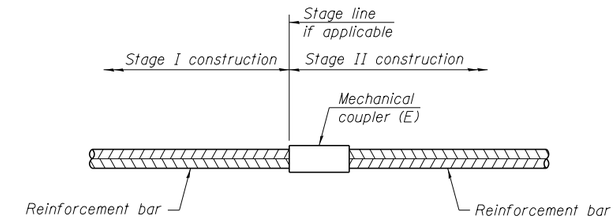

STANDARD MECHANICAL SPLICER

Location	Bar size	No. assemblies required

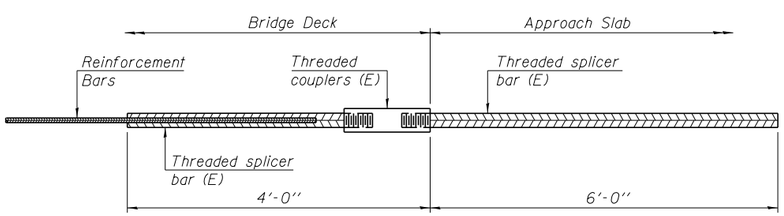

BAR SPLICER ASSEMBLY FOR #5 BAR ON INTEGRAL OR SEMI-INTEGRAL ABUTMENTS

No. required =

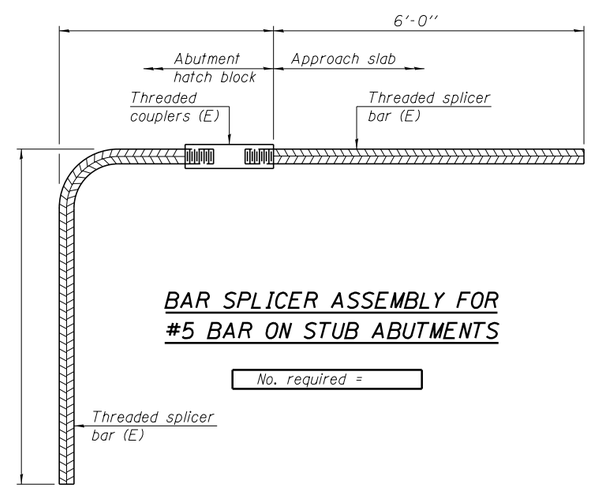

BAR SPLICER ASSEMBLY FOR #5 BAR ON STUB ABUTMENTS

No. required =

NOTES

Splicer bars shall be deformed with threaded ends and have a minimum 60 ksi yield strength.

All reinforcement shall be lapped and tied to the splicer bars.

Bar splicer assemblies shall be epoxy coated according to the requirements for reinforcement bars. See Section 508 of the Standard Specifications.

See approved list of bar splicer assemblies and mechanical splicers for alternatives.

BSD-1 1-27-12

benesch engineers · scientists · planners
Alfred Benesch & Company
205 North Michigan Avenue, Suite 2400
Chicago, Illinois 60601
312-565-0450 Job No. 10056

FILE NAME = 0900141_68620_14_brsplc.dgn	USER NAME = mbecker	DESIGNED - JDC	REVISED -
		CHECKED - MRB/AAY	REVISED -
	PLOT SCALE =	DRAWN - JDC	REVISED -
	PLOT DATE = 7/16/2012	CHECKED - MRB/AAY	REVISED -

STATE OF ILLINOIS
DEPARTMENT OF TRANSPORTATION

BAR SPLICER ASSEMBLY DETAILS
STRUCTURE NO. 090-0141
SHEET NO. SD14 OF SD29 SHEETS

F.A.I. RTE.	SECTION	COUNTY	TOTAL SHEETS	SHEET NO.
74	90-[14R;14HB-4,14,14HVB)BR]	TAZEWELL	2433	2053
		CONTRACT NO. 68620		
		ILLINOIS FED. AID PROJECT		

X:\10000S\10056\Engineering_Documents_Phase_II\MortonOverI74\Final\0900141_68620_14_brsplc.dgn 7:36:26 AM 7/16/2012

RTE.	SECTION	COUNTY	TOTAL SHEETS	SHEET NO.
FAI 74	*	TAZEWELL	280	31
STA.		TO STA.		
F.H.W.A. REG.	ILLINOIS			

*(90-15-1,15-1H8,15 W)-1

SHEET 1 OF 22

STATE OF ILLINOIS
DEPARTMENT OF TRANSPORTATION

BENCH MARK: TBM #3 WEST SIDE MORTON AVE., TOP OF METAL PLATE @ CURB (NEAR MIDDLE BRIDGE) STA. 36+28 ℄ I-74 ELEV. 739.91±.

EXISTING STRUCTURE: 090-0045 THE EXISTING 4 SIMPLE SPAN, 30' WIDE PLANE BRIDGE MEASURES APPROX. 122'-0" BF. TO BF. OF ABUTMENTS. THIS STRUCTURE CARRIES FAU 6729 (MORTON AVE.) OVER I-74 AND WAS BUILT IN 1962. THE BRIDGE IS LOCATED ON A 700' VERTICAL CURVE WITH 1% GRADE AT APPROACHES, AND IS ON A 15°-18' HORIZONTAL CURVE. THE EXISTING STRUCTURE WILL REMAIN IN SERVICE WHILE THE ACCESS RAMPS AND NEW BRIDGE IS BEING BUILT. ℄ OF THE NEW BRIDGE IS 15'± TO WEST OF THE OLD STRUCTURE. EXISTING BRIDGE WILL BE REMOVED AFTER COMPLETION OF NEW. REMOVAL OF EXISTING SLOPE WALLS OF EXISTING BRIDGE SHALL BE INCLUDED IN THE LUMP SUM PRICE.

NO SALVAGE.

SEE SHEET 212 FOR EXISTING STRUCTURE REMOVAL DETAILS.

SEE SHEET 104 FOR SETTLEMENT PLATFORM QUANTITY AND DETAILS.

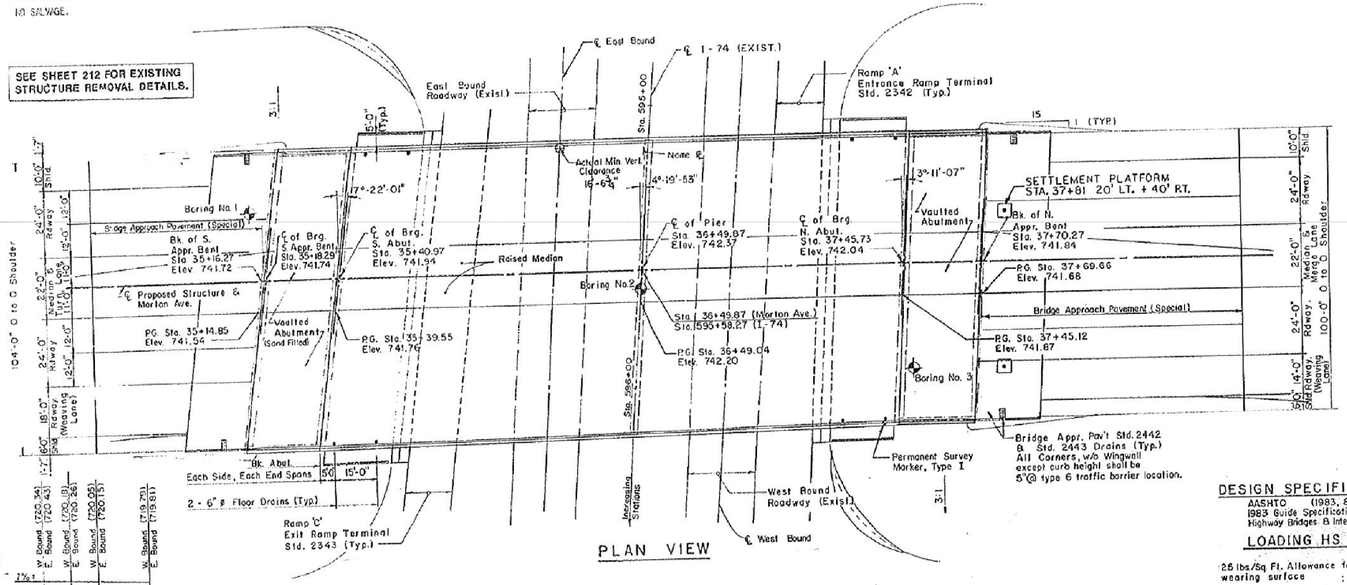

PLAN VIEW

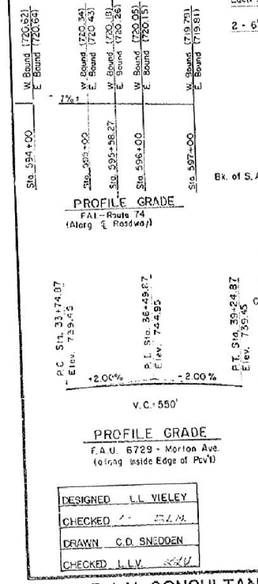

PROFILE GRADE
FAI-Route 74 (Along ℄ Roadway)

PROFILE GRADE
F.A.U. 6729 - Morton Ave. (along Inside Edge of PCVI)

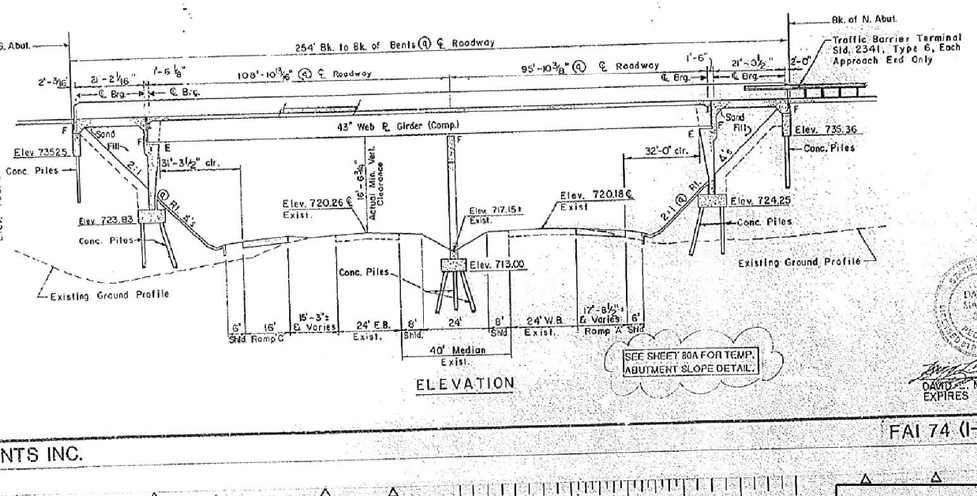

ELEVATION

SEE SHEET 80A FOR TEMP. ABUTMENT SLOPE DETAIL.

INDEX OF SHEETS

SHEET	DESCRIPTION
1 OF 22	GENERAL PLAN & ELEVATION
2 OF 22	GENERAL NOTES & SLOPEWALL DETAILS
3 OF 22	SUBSTRUCTURE LAYOUT
4 OF 22	TOP OF SLAB ELEVATIONS
5 OF 22	TOP OF SLAB ELEVATIONS
6 OF 22	TOP OF SLAB ELEVATIONS
7 OF 22	TOP OF SLAB ELEVATIONS
8 OF 22	SUPERSTRUCTURE
9 OF 22	EAST SUPERSTRUCTURE DETAILS
10 OF 22	WEST SUPERSTRUCTURE DETAILS
11 OF 22	NORTH APPROACH SLAB
12 OF 22	SOUTH APPROACH SLAB
13 OF 22	DECK FRAMING PLAN
14 OF 22	STRUCTURAL STEEL
15 OF 22	BEARING DETAILS
16 OF 22	ANCHOR BOLT DETAILS FOR BEARINGS
17 OF 22	NORTH ABUTMENT
18 OF 22	SOUTH ABUTMENT
19 OF 22	EAST PIER
20 OF 22	WEST PIER
21 OF 22	PILE DETAILS
22 OF 22	SOIL BORING DATA

TOTAL BILL OF MATERIAL

ITEM	UNIT	SUPER	SUB	TOTAL
Structure Excavation	Cu. Yd.	—	1116	1116
Sand Backfill	Cu. Yd.	—	760	760
Floor Drains	Each	8	—	8
Protective Coat	Sq. Yd.	1571	—	1571
Class X Concrete	Cu. Yd.	—	6833	6833
Structural Steel	L. Sum	1	—	1
Stud Shear Connectors	Each	5916	—	5916
Reinforcement Bars	Pound	—	18,500	18,500
Reinforcement Bars (Epoxy Coated)	Pound	211,030	63,300	274,330
Concrete Piles	Lin. Ft.	—	8383	8383
Test Piles Concrete	Each	—	2	2
Slope Wall, 4"	Sq. Yd.	—	771	771
Preformed Joint Seal, 4"	Lin. Ft.	212	—	212
Elastomeric Bearing Assembly, Type I	Each	28	—	28
Name Plates	Each	—	1	1
Removal of Exist. Structure	L. Sum	—	—	1
Class X Concrete Superstructure	Cu. Yd.	887.5	—	8975
Driving Concrete Piles	Lin. Ft.	—	8383	8383
** Permanent Survey Markers, Type I	Each	1	—	1
Bridge Deck Grooving	Sq. Yd.	1746	—	1746

** Survey Marker To Be Located As Shown In Plan. Station and Elevation To Be Cast Into Marker After In Place.

DESIGN SPECIFICATIONS

AASHTO (1983, 84, 85, 86 & 87 Interim)
1983 Guide Specifications for Seismic Design of Highway Bridges & Interims Thru 1987.

LOADING HS 20-44

25 lbs/Sq Ft. Allowance for future wearing surface

DESIGN STRESSES

f'c = 3,500 p.s.i.
fy = 60,000 p.s.i. (Reinf.)
fy = 50,000 p.s.i. (Struct. Stl.) (M223, Gr. 50)
fy = 36,000 p.s.i. (Struct. Stl.) (M183.)

DATE: APRIL 1, 1992
F.A.I. 74 & F.A.U. 6729
SECTION 90-15-1, NB
TAZEWELL COUNTY
STATION 36+49.87

MORTON AVENUE OVER INTERSTATE 74

GENERAL PLAN & ELEVATION

STRUCTURE NO. 090-0145

Revised 9-11-92 090-0141

DAVID L. MAURER, S.E. NO. 3921
EXPIRES 11/92

DESIGNED	L.L. VIELEY
CHECKED	
DRAWN	C.D. SNEDDEN
CHECKED	L.L.V.

R.A.N. CONSULTANTS INC.

FAI 74 (I-74) / FAU 6729 (MORTON AVE.)

FOR INFORMATION ONLY

benesch engineers · scientists · planners
Alfred Benesch & Company
205 North Michigan Avenue, Suite 2400
Chicago, Illinois 60601
312-565-0450 Job No. 10056

FILE NAME =	USER NAME = mbecker	DESIGNED - JDC	REVISED -
		CHECKED - MRB	REVISED -
090141_68620_15_existl.dgn	PLOT SCALE =	DRAWN - PRT	REVISED -
	PLOT DATE = 7/16/2012	CHECKED - MRB	REVISED -

STATE OF ILLINOIS
DEPARTMENT OF TRANSPORTATION

EXISTING PLANS
STRUCTURE NO. 090-0141
SHEET NO. SD15 OF SD29 SHEETS

F.A.I. RTE.	SECTION	COUNTY	TOTAL SHEETS	SHEET NO.
74	90-[14R;(14HB-4,14,14HVB)BR]	TAZEWELL	2433	2054
		CONTRACT NO. 68620		
		ILLINOIS FED. AID PROJECT		

X:\10000S\10056\Engineering_Documents_Phase_II\MortonOver174\Final\090141_68620_15_existl.dgn 7:36:27 AM 7/16/2012

RTE.	SECTION	COUNTY	TOTAL SHEETS	SHEET NO.
FAI 74	*	TAZEWELL	220	(32A)
STA.		TO STA.		
F.A.W.A. REG.		ILLINOIS		

x (90-15-1, 15-1HB, 15W)-1

SHEET 2 OF 22

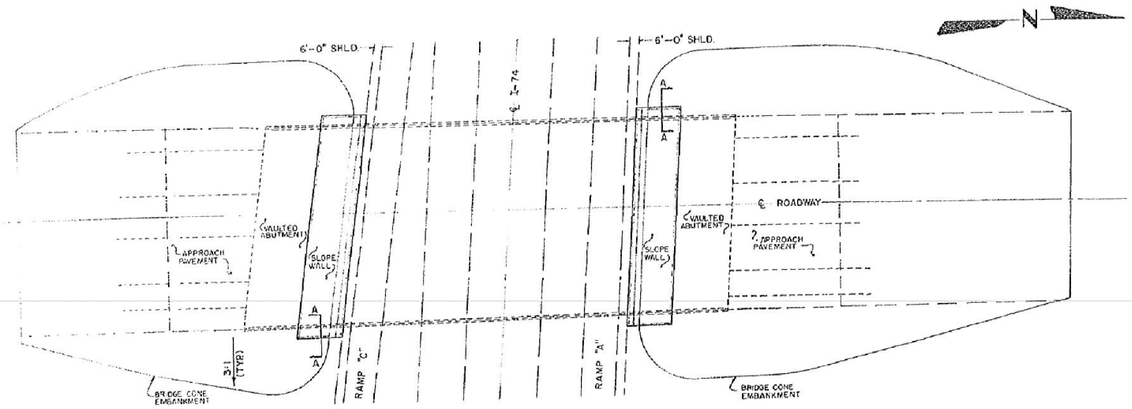

PLAN

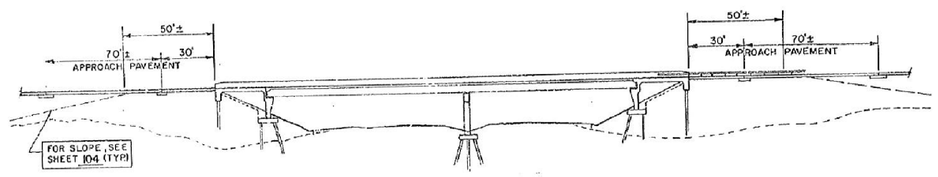

ELEVATION

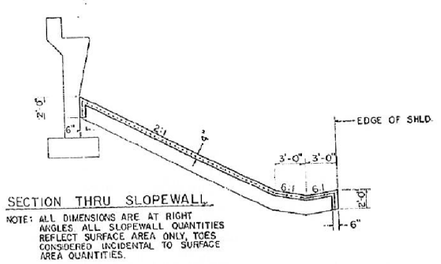

SECTION THRU SLOPEWALL

NOTE: ALL DIMENSIONS ARE AT RIGHT ANGLES. ALL SLOPEWALL QUANTITIES REFLECT SURFACE AREA ONLY, TOES CONSIDERED INCIDENTAL TO SURFACE AREA QUANTITIES.

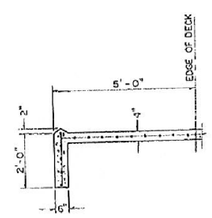

SECTION A-A

STATION 36+49.87
BUILT 199__ BY
STATE OF ILLINOIS
FAU RTE 6729 SEC (90-15-1,15-1HB,15W)-1
LOADING HS 20
STR. NO. 090-0149

090-0141

NAME PLATE
SEE STANDARD 2115

GENERAL NOTES

Fasteners shall be high strength bolts. Bolts 7/8" Ø, open holes 15/16" Ø, unless otherwise noted.

Calculated weight of AASHTO M223, grade 50 structural steel = 516,450 pounds.

Calculated weight of AASHTO M183 structural steel = 74,630 pounds.

Field welding of construction accessories will not be permitted to the bottom flange of girders nor to the top flange for a distance equal to one-fourth the span length each way from the pier supports. Field welding in other areas will be permitted only when approved by the Engineer.

Anchor bolts shall be set before bolting diaphragms over supports.

The main load carrying member components subject to tensile stress shall conform to the Supplemental Requirements for Notch Toughness Zone 2. These components are the tension flanges, webs of the Steel Plate Girders and all Splice Plate Material except fill plates.

Reinforcement bars shall conform to the requirements of AASHTO M-31, M-42 or M-53 grade 60 deformed bars.

Slope wall shall be reinforced with weld wire fabric. 6"x 6" - W4.0x W4.0, weighing 58 lbs. per 100 sq. ft.

The embankment configuration shown shall be the minimum embankment that must be constructed prior to construction of the abutments.

Bearing seat surfaces shall be constructed or adjusted to the designated elevations within a tolerance of an 1/8". Adjustment shall be made either by grinding the surface or by shimming the bearing. Two 1/8" adjusting shims of the dimensions of the bottom bearing plate shall be provided for each bearing in addition to all other plates or shims. For Type I Elastomeric Bearings, shims of the dimensions of the top plate shall be provided and placed as detailed.

The contractor shall drive one concrete test pile in a permanent location of the South Abutment and one concrete test pile in a permanent location of Pier as directed by the Engineer before ordering the remainder of piles.

Concrete piles at abutments shall be driven in holes precored through the embankment in accordance with Article 513.09 (c) of the Standard Specifications.

The zinc-silicate and vinyl paint system shall be used for shop and field painting of structural steel except where otherwise noted. Munsell No. 10 B 316 Blue.

SEE SHEET 104 FOR LOCATION AND DETAILS OF SETTLEMENT PLATFORMS

SEE SHEET 80A FOR DETAILS OF TEMPORARY ACCESS UNDER PROPOSED AND EXISTING BRIDGES.

DESIGNED	L.L. VIELEY
CHECKED	D.L.M.
DRAWN	C.D. SNEDDEN
CHECKED	L.L.V.

AS REVISED

GENERAL NOTES & SLOPEWALL DETAILS

F.A.I. 74 & F.A.U. 6729
SECTION (90-15-1, 15-1HB, 15W)-1
TAZEWELL COUNTY
STATION 36+49.87

REVISED 6-24-

AS REVISED 1/27/93 NJS

R.A.N. CONSULTANTS INC.

FAI 74 (I-74) / FAU 6729 (MORTON AVE.)

FOR INFORMATION ONLY

benesch
engineers · scientists · planners

Alfred Benesch & Company
205 North Michigan Avenue, Suite 2400
Chicago, Illinois 60601
312-565-0450 Job No. 10056

FILE NAME =	USER NAME = mbecker	DESIGNED - JDC	REVISED -
		CHECKED - MRB	REVISED -
0900141_68620_16_exist2.dgn	PLOT SCALE =	DRAWN - PRT	REVISED -
	PLOT DATE = 7/16/2012	CHECKED - MRB	REVISED -

STATE OF ILLINOIS
DEPARTMENT OF TRANSPORTATION

EXISTING PLANS
STRUCTURE NO. 090-0141
SHEET NO. SD16 OF SD29 SHEETS

F.A.I. RTE.	SECTION	COUNTY	TOTAL SHEETS	SHEET NO.
74	90-(14R;(14HB-4,14,14HVB)BR)	TAZEWELL	2433	2055
		CONTRACT NO. 68620		
		ILLINOIS FED. AID PROJECT		

7:36:38 AM X:\100005\10056\Engineering_Documents_Phase_II\MortonOver174\Final\0900141_68620_16_exist2.dgn 7/16/2012

RTE.	SECTION	COUNTY	TOTAL SHEETS	SHEET NO.
FAI 74	*	TAZEWELL	200	34
STA.		TO STA.		
R.N.W.A. PEG.		ILLINOIS		

*190-15-1, 15-1 HB, 15W)-1

SHEET 4 OF 22

STATE OF ILLINOIS
DEPARTMENT OF TRANSPORTATION

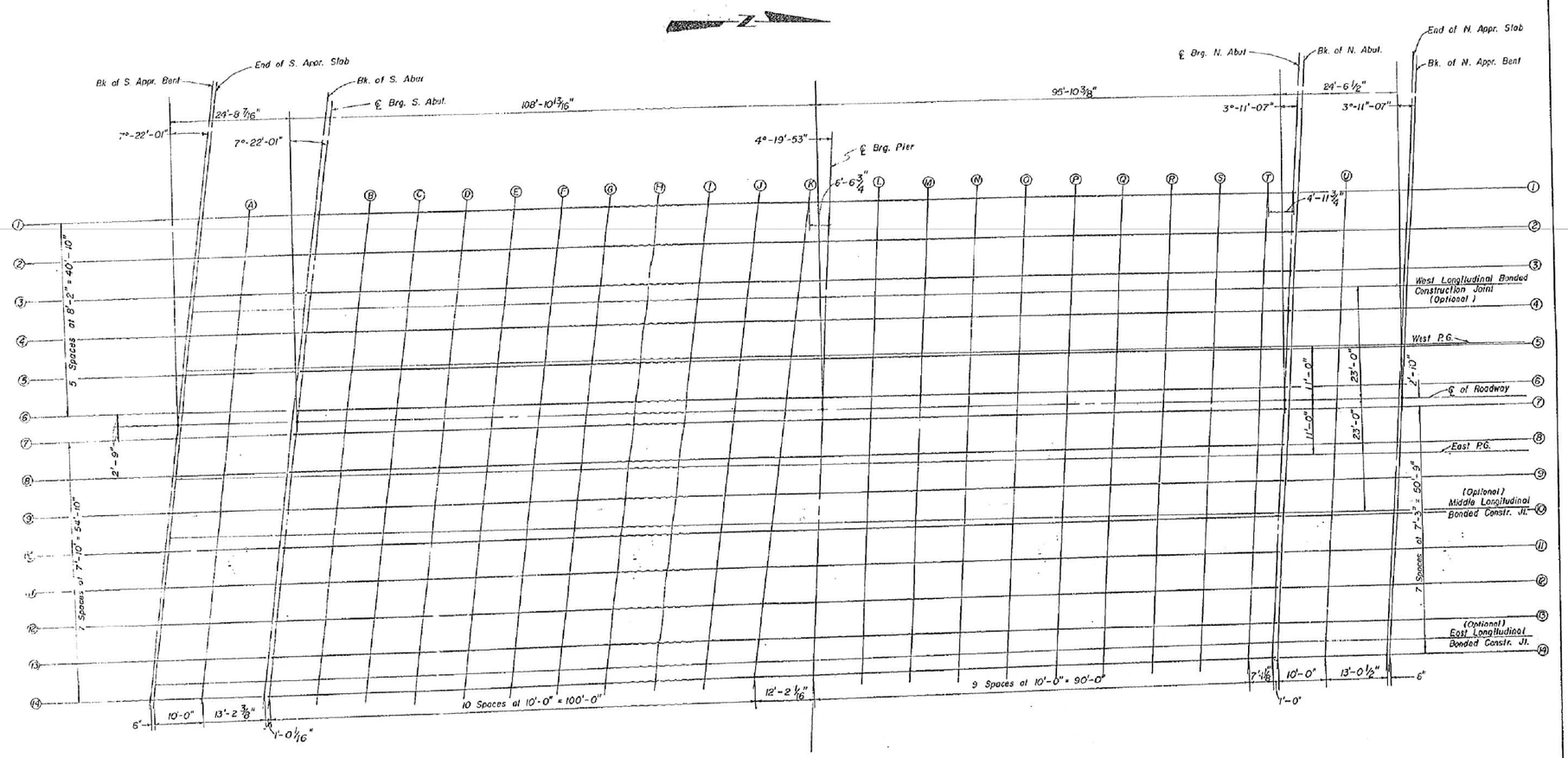

PLAN

Note: See Sheets 5,6 & 7 for Slab Elevations.

DESIGNED	L. L. VIELEY
CHECKED	
DRAWN	C.D. SHEDDEN
CHECKED	L.L.V.

TOP OF SLAB ELEVATIONS

F.A.I. 74 & F.A.U. 6729
SECTION (90-15-1, 15-1HB, 15W)-1
TAZEWELL COUNTY
STATION 38+40.07

FAI 74 (I-74) / FAU 6729 (MORTON AVE.)

863 10

R.A.N. CONSULTANTS INC.

FOR INFORMATION ONLY

benesch
engineers · scientists · planners

Alfred Benesch & Company
205 North Michigan Avenue, Suite 2400
Chicago, Illinois 60601
312-565-0450 Job No. 10056

FILE NAME =	USER NAME = mbecker	DESIGNED - JDC	REVISED -
		CHECKED - MRB	REVISED -
0900141_68620_17_exist3.dgn	PLOT SCALE =	DRAWN - PRT	REVISED -
	PLOT DATE = 7/16/2012	CHECKED - MRB	REVISED -

STATE OF ILLINOIS
DEPARTMENT OF TRANSPORTATION

EXISTING PLANS
STRUCTURE NO. 090-0141

SHEET NO. SD17 OF SD29 SHEETS

F.A.I. RTE.	SECTION	COUNTY	TOTAL SHEETS	SHEET NO.
74	90-(14R;(14HB-4,14,14HVB)BR)	TAZEWELL	2433	2056
		CONTRACT NO. 68620		
	ILLINOIS	FED. AID PROJECT		

7/16/2012 7:36:50 AM X:\100005\10056\Engineering_Documents_Phase_II\MortonOver174\Final\0900141_68620_17_exist3.dgn

RTE.	SECTION	COUNTY	TOTAL SHEETS	SHEET NO.
FAI 74	*	TAZEWELL	280	35
STA.		TO STA.		
F.H.W.A. REG.	ILLINOIS			

* (90-15-1, 15-1HB, 15W)-1

SHEET 5 OF 22

STATE OF ILLINOIS
DEPARTMENT OF TRANSPORTATION

LINE	BEAM OR GIRDER	STATION	OFFSET	THEORETICAL GRADE ELEVATION	ELEVATION ADJUSTED FOR DEAD LOAD DEFLECTION
EXSABT	GRDR 1	3521.904	43.583	741.049	741.049
	GRDR 2	3520.848	35.417	741.209	741.209
	GRDR 3	3519.793	27.250	741.329	741.329
	WTBDJT	3519.243	23.000	741.390	741.390
	GRDR 4	3518.737	19.083	741.446	741.446
	WESTPG	3517.692	11.000	741.563	741.563
	GRDR 5	3517.681	10.917	741.564	741.564
	GRDR 6	3516.626	2.750	741.681	741.681
	CLRDWY	3516.270	.000	741.721	741.721
	GRDR 7	3515.914	-2.750	741.675	741.675
	GRDR 8	3514.902	-10.583	741.542	741.542
	EASTPG	3514.848	-11.000	741.535	741.535
	GRDR 9	3513.889	-18.417	741.410	741.410
	HDBDJT	3513.296	-23.000	741.332	741.332
	GRDR10	3512.876	-26.250	741.277	741.277
	GRDR11	3511.863	-34.083	741.145	741.145
	GRDR12	3510.851	-41.917	741.012	741.012
	GRDR13	3509.838	-49.750	740.879	740.879
	EABDJT	3509.344	-53.573	740.815	740.815
	GRDR14	3508.825	-57.583	740.747	740.747
ESAPPS	GRDR 1	3522.404	43.583	741.054	741.054
	GRDR 2	3521.348	35.417	741.214	741.214
	GRDR 3	3520.293	27.250	741.334	741.334
	WTBDJT	3519.743	23.000	741.395	741.395
	GRDR 4	3519.237	19.083	741.451	741.451
	WESTPG	3518.192	11.000	741.560	741.568
	GRDR 5	3518.181	10.917	741.569	741.569
	GRDR 6	3517.126	2.750	741.686	741.686
	CLRDWY	3516.770	.000	741.726	741.726
	GRDR 7	3516.414	-2.750	741.679	741.679
	GRDR 8	3515.402	-10.583	741.547	741.547
	EASTPG	3515.348	-11.000	741.540	741.540
	GRDR 9	3514.389	-18.417	741.415	741.415
	HDBDJT	3513.796	-23.000	741.337	741.337
	GRDR10	3513.376	-26.250	741.282	741.282
	GRDR11	3512.363	-34.083	741.150	741.150
	GRDR12	3511.351	-41.917	741.017	741.017
	GRDR13	3510.338	-49.750	740.885	740.885
	EABDJT	3509.844	-53.573	740.820	740.820
	GRDR14	3509.325	-57.583	740.752	740.752
A	GRDR 1	3532.404	43.583	741.143	741.143
	GRDR 2	3531.348	35.417	741.304	741.304
	GRDR 3	3530.293	27.250	741.424	741.424
	WTBDJT	3529.743	23.000	741.486	741.486
	GRDR 4	3529.237	19.083	741.543	741.543
	WESTPG	3528.192	11.000	741.660	741.660
	GRDR 5	3528.181	10.917	741.661	741.661
	GRDR 6	3527.126	2.750	741.779	741.779
	CLRDWY	3526.770	.000	741.819	741.819
	GRDR 7	3526.414	-2.753	741.773	741.773
	GRDR 8	3525.402	-10.583	741.641	741.641
	EASTPG	3525.348	-11.000	741.634	741.634
	GRDR 9	3524.389	-18.417	741.510	741.510
	HDBDJT	3523.796	-23.000	741.433	741.433
	GRDR10	3523.376	-26.250	741.378	741.378
	GRDR11	3522.363	-34.083	741.246	741.246
	GRDR12	3521.351	-41.917	741.114	741.114
	GRDR13	3520.338	-49.750	740.982	740.982
	EABDJT	3519.844	-53.573	740.910	740.918
	GRDR14	3519.325	-57.583	740.850	740.850
BKSAB	GRDR 1	3545.602	43.583	741.249	741.249
	GRDR 2	3544.546	35.417	741.411	741.411
	GRDR 3	3543.491	27.250	741.533	741.533
	WTBDJT	3542.941	23.000	741.595	741.595
	GRDR 4	3542.435	19.083	741.652	741.652
	WESTPG	3541.390	11.000	741.770	741.770
	GRDR 5	3541.379	10.917	741.771	741.771
	GRDR 6	3540.323	2.750	741.891	741.891
	CLRDWY	3539.968	.000	741.931	741.931
	GRDR 7	3539.611	-2.758	741.885	741.885
	GRDR 8	3538.602	-10.583	741.754	741.754
	EASTPG	3538.548	-11.000	741.747	741.747
	GRDR 9	3537.589	-18.417	741.624	741.624
	HDBDJT	3536.996	-23.000	741.547	741.547
	GRDR10	3536.576	-26.250	741.493	741.493
	GRDR11	3535.563	-34.083	741.362	741.362
	GRDR12	3534.551	-41.917	741.231	741.231
	GRDR13	3533.530	-49.750	741.100	741.100
	EABDJT	3533.044	-53.573	741.037	741.037
	GRDR14	3532.525	-57.583	740.969	740.969
CLBSAB	GRDR 1	3546.607	43.583	741.257	741.257
	GRDR 2	3545.552	35.417	741.419	741.419
	GRDR 3	3544.496	27.250	741.540	741.540
	WTBDJT	3543.946	23.000	741.603	741.603
	GRDR 4	3543.440	19.083	741.660	741.660
	WESTPG	3542.395	11.000	741.778	741.778
	GRDR 5	3542.384	10.917	741.779	741.779
	GRDR 6	3541.329	2.750	741.899	741.899
	CLRDWY	3540.973	.000	741.939	741.939
	GRDR 7	3540.617	-2.758	741.893	741.893
	GRDR 8	3539.602	-10.583	741.762	741.762
	EASTPG	3539.548	-11.000	741.756	741.756
	GRDR 9	3538.589	-18.417	741.632	741.632
	HDBDJT	3537.996	-23.000	741.555	741.555
	GRDR10	3537.576	-26.250	741.501	741.501
	GRDR11	3536.563	-34.083	741.371	741.371
	GRDR12	3535.551	-41.917	741.240	741.240
	GRDR13	3534.538	-49.750	741.109	741.109
	EABDJT	3534.044	-53.573	741.045	741.045
	GRDR14	3533.525	-57.583	740.978	740.978
B	GRDR 1	3556.607	43.583	741.320	741.398
	GRDR 2	3555.552	35.417	741.491	741.561
	GRDR 3	3554.496	27.250	741.613	741.683
	WTBDJT	3553.946	23.000	741.676	741.746
	GRDR 4	3553.440	19.083	741.734	741.804
	WESTPG	3552.395	11.000	741.853	741.923
	GRDR 5	3552.384	10.917	741.854	741.924
	GRDR 6	3551.329	2.750	741.974	742.044
	CLRDWY	3550.973	.000	742.014	742.084
	GRDR 7	3550.616	-2.761	741.969	742.039
	GRDR 8	3549.605	-10.559	741.839	741.917
	EASTPG	3549.548	-11.000	741.832	741.910
	GRDR 9	3548.596	-18.364	741.710	741.788
	HDBDJT	3547.996	-23.000	741.633	741.711
	GRDR10	3547.587	-26.169	741.581	741.659
	GRDR11	3546.577	-33.975	741.451	741.529
	GRDR12	3545.568	-41.780	741.322	741.400
	GRDR13	3544.559	-49.586	741.192	741.270
	EABDJT	3544.068	-53.381	741.129	741.207
	GRDR14	3543.550	-57.392	741.062	741.140
C	GRDR 1	3566.607	43.583	741.392	741.520
	GRDR 2	3565.552	35.417	741.556	741.684
	GRDR 3	3564.496	27.250	741.679	741.807
	WTBDJT	3563.946	23.000	741.742	741.870
	GRDR 4	3563.440	19.083	741.800	741.928
	WESTPG	3562.395	11.000	741.920	742.048
	GRDR 5	3562.384	10.917	741.921	742.049
	GRDR 6	3561.329	2.750	742.042	742.170
	CLRDWY	3560.973	.000	742.083	742.211
	GRDR 7	3560.616	-2.765	742.037	742.165
	GRDR 8	3559.608	-10.535	741.909	742.053
	EASTPG	3559.548	-11.000	741.901	742.045
	GRDR 9	3558.603	-18.311	741.781	741.925
	HDBDJT	3557.996	-23.000	741.704	741.848
	GRDR10	3557.597	-26.089	741.653	741.797
	GRDR11	3556.591	-33.866	741.524	741.669
	GRDR12	3555.586	-41.644	741.396	741.540
	GRDR13	3554.580	-49.422	741.267	741.412
	EABDJT	3554.093	-53.190	741.205	741.349
	GRDR14	3553.575	-57.200	741.139	741.283
D	GRDR 1	3576.607	43.583	741.449	741.617
	GRDR 2	3575.552	35.417	741.613	741.781
	GRDR 3	3574.496	27.250	741.738	741.906
	WTBDJT	3573.946	23.000	741.801	741.969
	GRDR 4	3573.440	19.083	741.859	742.027
	WESTPG	3572.395	11.000	741.980	742.148
	GRDR 5	3572.384	10.917	741.981	742.149
	GRDR 6	3571.329	2.750	742.103	742.271
	CLRDWY	3570.973	.000	742.144	742.312
	GRDR 7	3570.615	-2.768	742.098	742.266
	GRDR 8	3569.611	-10.510	741.972	742.163
	EASTPG	3569.548	-11.000	741.963	742.154
	GRDR 9	3568.609	-18.259	741.845	742.036
	HDBDJT	3567.996	-23.000	741.767	741.958
	GRDR10	3567.607	-26.000	741.717	741.909
	GRDR11	3566.605	-33.757	741.590	741.781
	GRDR12	3565.603	-41.507	741.463	741.654
	GRDR13	3564.601	-49.258	741.336	741.527
	EABDJT	3564.118	-52.990	741.274	741.466
	GRDR14	3563.599	-57.008	741.208	741.400
E	GRDR 1	3586.607	43.583	741.499	741.687
	GRDR 2	3585.552	35.417	741.664	741.852
	GRDR 3	3584.496	27.250	741.789	741.977
	WTBDJT	3583.946	23.000	741.853	742.041
	GRDR 4	3583.440	19.083	741.911	742.099
	WESTPG	3582.395	11.000	742.033	742.221
	GRDR 5	3582.384	10.917	742.034	742.222
	GRDR 6	3581.329	2.750	742.156	742.344
	CLRDWY	3580.973	.000	742.197	742.385
	GRDR 7	3580.615	-2.771	742.152	742.340
	GRDR 8	3579.614	-10.486	742.027	742.245
	EASTPG	3579.548	-11.000	742.018	742.236
	GRDR 9	3578.616	-18.206	741.901	742.119
	HDBDJT	3577.996	-23.000	741.823	742.041
	GRDR10	3577.618	-25.927	741.775	741.993
	GRDR11	3576.620	-33.649	741.649	741.867
	GRDR12	3575.621	-41.371	741.523	741.741
	GRDR13	3574.623	-49.093	741.397	741.615
	EABDJT	3574.143	-52.806	741.336	741.554
	GRDR14	3573.624	-56.817	741.271	741.489
F	GRDR 1	3596.607	43.583	741.541	741.729
	GRDR 2	3595.552	35.417	741.707	741.895
	GRDR 3	3594.496	27.250	741.833	742.021
	WTBDJT	3593.946	23.000	741.897	742.085
	GRDR 4	3593.440	19.083	741.956	742.144
	WESTPG	3592.395	11.000	742.078	742.266
	GRDR 5	3592.384	10.917	742.079	742.267
	GRDR 6	3591.329	2.750	742.202	742.390
	CLRDWY	3590.973	.000	742.244	742.432
	GRDR 7	3590.614	-2.775	742.199	742.387
	GRDR 8	3589.617	-10.462	742.075	742.298
	EASTPG	3589.548	-11.000	742.066	742.290
	GRDR 9	3588.623	-18.154	741.950	742.174
	HDBDJT	3587.996	-23.000	741.871	742.095
	GRDR10	3587.620	-25.847	741.825	742.049
	GRDR11	3586.634	-33.540	741.700	741.924
	GRDR12	3585.639	-41.234	741.576	741.799
	GRDR13	3584.644	-48.929	741.451	741.674
	EABDJT	3584.167	-52.615	741.391	741.615
	GRDR14	3583.649	-56.625	741.326	741.549
G	GRDR 1	3606.607	43.583	741.576	741.744
	GRDR 2	3605.552	35.417	741.743	741.911
	GRDR 3	3604.496	27.250	741.869	742.037
	WTBDJT	3603.946	23.000	741.934	742.102
	GRDR 4	3603.440	19.083	741.993	742.161
	WESTPG	3602.395	11.000	742.116	742.284
	GRDR 5	3602.384	10.917	742.117	742.285
	GRDR 6	3601.329	2.750	742.241	742.409
	CLRDWY	3600.973	.000	742.283	742.451
	GRDR 7	3600.614	-2.778	742.238	742.406
	GRDR 8	3599.621	-10.437	742.115	742.324
	EASTPG	3599.548	-11.000	742.106	742.315
	GRDR 9	3598.630	-18.101	741.992	742.201
	HDBDJT	3597.996	-23.000	741.913	742.122
	GRDR10	3597.639	-25.766	741.868	742.077
	GRDR11	3596.648	-33.431	741.745	741.953
	GRDR12	3595.656	-41.098	741.621	741.830
	GRDR13	3594.665	-48.765	741.497	741.706
	EABDJT	3594.192	-52.423	741.438	741.647
	GRDR14	3593.674	-56.433	741.373	741.582
H	GRDR 1	3616.607	43.583	741.604	741.738
	GRDR 2	3615.552	35.417	741.772	741.906
	GRDR 3	3614.496	27.250	741.899	742.033
	WTBDJT	3613.946	23.000	741.964	742.098
	GRDR 4	3613.440	19.083	742.023	742.157
	WESTPG	3612.395	11.000	742.147	742.281
	GRDR 5	3612.384	10.917	742.148	742.282
	GRDR 6	3611.329	2.750	742.273	742.407
	CLRDWY	3610.973	.000	742.315	742.449
	GRDR 7	3610.614	-2.781	742.270	742.405
	GRDR 8	3609.624	-10.413	742.148	742.325
	EASTPG	3609.548	-11.000	742.139	742.316
	GRDR 9	3608.636	-18.049	742.026	742.203
	HDBDJT	3607.996	-23.000	741.947	742.124
	GRDR10	3607.649	-25.685	741.904	742.080
	GRDR11	3606.662	-33.323	741.781	741.958
	GRDR12	3605.674	-40.961	741.659	741.835
	GRDR13	3604.686	-48.601	741.536	741.713
	EABDJT	3604.217	-52.231	741.478	741.654
	GRDR14	3603.690	-56.242	741.414	741.590

NOTE: SEE SHEET NO. 7 FOR DEAD LOAD DEFLECTION DIAGRAMS AND FILLET DETAILS. POSITIVE OFFSET NUMBERS ARE MEASURED LEFT OF ℄ ROADWAY, LOOKING UP STATION. NEGATIVE OFFSET NUMBERS ARE MEASURED RIGHT OF ℄ ROADWAY, LOOKING UP STATION.

DESIGNED	L.L. VIELEY
CHECKED	
DRAWN	C.D. SNEDDEN
CHECKED	L.L.V. LLV

TOP OF SLAB ELEVATIONS

F.A.I. 74 & F.A.U. 6729
SECTION (90-15-1, 15-1HB, 15W)-1
TAZEWELL COUNTY
STATION 36+49.87

FAI 74 (I-74) / FAU 6729 (MORTON AVE.)

R.A.N. CONSULTANTS INC.

S6310

FOR INFORMATION ONLY

Alfred Benesch & Company
205 North Michigan Avenue, Suite 2400
Chicago, Illinois 60601
312-565-0450 Job No. 10056

FILE NAME = 0900141_68620_18_exist4.dgn	USER NAME = mbecker	DESIGNED - JDC	REVISED -
		CHECKED - MRB	REVISED -
	PLOT SCALE =	DRAWN - PRT	REVISED -
	PLOT DATE = 7/16/2012	CHECKED - MRB	REVISED -

STATE OF ILLINOIS
DEPARTMENT OF TRANSPORTATION

EXISTING PLANS
STRUCTURE NO. 090–0141

SHEET NO. SD18 OF SD29 SHEETS

F.A.I. RTE.	SECTION	COUNTY	TOTAL SHEETS	SHEET NO.
74	90-[14R;(14HB-4,14,14HVB)BR]	TAZEWELL	2433	2057
		CONTRACT NO. 68620		
		ILLINOIS FED. AID PROJECT		

RTE.	SECTION	COUNTY	TOTAL SHEETS	SHEET NO.
FAI 74	*	TAZEWELL	236	36
STA.		TO STA.		
F.H.W.A. REG.		ILLINOIS		

*(90-15-1,15-1HB,15W)-1

SHEET 6 OF 22

STATE OF ILLINOIS
DEPARTMENT OF TRANSPORTATION

LINE	BEAM OR GIRDER	STATION	OFFSET	THEORETICAL GRADE ELEVATION	ELEVATION ADJUSTED FOR DEAD LOAD DEFLECTION
I	GRDR 1	3626.607	43.583	741.625	741.716
	GRDR 2	3625.552	35.417	741.793	741.884
	GRDR 3	3624.499	27.250	741.921	742.012
	WTBDJT	3623.946	23.000	741.986	742.077
	GRDR 4	3623.440	19.083	742.046	742.137
	WESTPG	3622.395	11.000	742.171	742.262
	GRDR 5	3622.384	10.917	742.297	742.388
	GRDR 6	3621.329	2.750	742.423	742.513
	CLRDWY	3620.973	.000	742.460	742.550
	GRDR 7	3620.613	-2.785	742.299	742.389
	GRDR 8	3619.627	-10.384	742.174	742.306
	EASTPG	3619.548	-11.000	742.165	742.297
	GRDR 9	3618.643	-17.996	742.053	742.185
	MDBDJT	3617.996	-23.000	741.974	742.106
	GRDR10	3617.660	-25.605	741.932	742.064
	GRDR11	3616.676	-33.234	741.811	741.943
	GRDR12	3615.692	-40.825	741.690	741.821
	GRDR13	3614.708	-48.437	741.568	741.699
	EABDJT	3614.242	-52.039	741.511	741.642
	GRDR14	3613.723	-56.056	741.447	741.578

LINE	BEAM OR GIRDER	STATION	OFFSET	THEORETICAL GRADE ELEVATION	ELEVATION ADJUSTED FOR DEAD LOAD DEFLECTION
J	GRDR 1	3636.607	43.583	741.636	741.686
	GRDR 2	3635.552	35.417	741.807	741.855
	GRDR 3	3634.496	27.250	741.936	741.984
	WTBDJT	3633.946	23.000	742.001	742.049
	GRDR 4	3633.440	19.083	742.061	742.110
	WESTPG	3632.395	11.000	742.187	742.235
	GRDR 5	3632.384	10.917	742.188	742.363
	GRDR 6	3631.329	2.750	742.315	742.405
	CLRDWY	3630.973	.000	742.357	742.361
	GRDR 7	3630.613	-2.788	742.313	742.274
	GRDR 8	3629.630	-10.364	742.193	742.265
	EASTPG	3629.540	-11.000	742.183	742.154
	GRDR 9	3628.650	-17.043	742.073	742.074
	MDBDJT	3627.996	-23.000	741.993	741.934
	GRDR10	3627.670	-25.524	741.953	741.904
	GRDR11	3626.690	-33.105	741.833	741.844
	GRDR12	3625.709	-40.600	741.713	741.793
	GRDR13	3624.729	-48.273	741.593	741.673
	EABDJT	3624.267	-51.848	741.536	741.616
	GRDR14	3623.748	-55.858	741.472	741.552

LINE	BEAM OR GIRDER	STATION	OFFSET	THEORETICAL GRADE ELEVATION	ELEVATION ADJUSTED FOR DEAD LOAD DEFLECTION
K	GRDR 1	3646.607	43.583	741.644	741.659
	GRDR 2	3645.552	35.417	741.814	741.829
	GRDR 3	3644.496	27.250	741.943	741.958
	WTBDJT	3643.946	23.000	742.009	742.024
	GRDR 4	3643.440	19.083	742.070	742.085
	WESTPG	3642.395	11.000	742.196	742.211
	GRDR 5	3642.384	10.917	742.197	742.212
	GRDR 6	3641.329	2.750	742.324	742.339
	CLRDWY	3640.973	.000	742.367	742.382
	GRDR 7	3640.612	-2.791	742.323	742.338
	GRDR 8	3639.633	-10.340	742.205	742.260
	EASTPG	3639.548	-11.000	742.194	742.235
	GRDR 9	3638.657	-17.091	742.086	742.122
	MDBDJT	3637.996	-23.000	742.005	742.041
	GRDR10	3637.680	-25.443	741.967	742.003
	GRDR11	3636.704	-32.997	741.848	741.883
	GRDR12	3635.727	-40.552	741.729	741.764
	GRDR13	3634.750	-48.100	741.610	741.645
	EABDJT	3634.291	-51.656	741.554	741.589
	GRDR14	3633.773	-55.666	741.491	741.526

LINE	BEAM OR GIRDER	STATION	OFFSET	THEORETICAL GRADE ELEVATION	ELEVATION ADJUSTED FOR DEAD LOAD DEFLECTION
SUPER	GRDR 1	3655.171	43.583	741.644	741.644
	GRDR 2	3652.553	35.417	741.814	741.814
	GRDR 3	3651.934	27.250	741.943	741.944
	WTBDJT	3651.612	23.000	742.010	742.010
	GRDR 4	3651.315	19.083	742.072	742.072
	WESTPG	3650.703	11.000	742.198	742.198
	GRDR 5	3650.697	10.917	742.199	742.199
	GRDR 6	3650.078	2.750	742.327	742.327
	CLRDWY	3649.870	.000	742.370	742.370
	GRDR 7	3649.650	-2.794	742.326	742.326
	GRDR 8	3649.080	-10.317	742.209	742.209
	EASTPG	3649.037	-11.000	742.198	742.198
	GRDR 9	3648.519	-17.839	742.091	742.091
	MDBDJT	3648.128	-23.000	742.010	742.010
	GRDR10	3647.949	-25.360	741.974	741.974
	GRDR11	3647.380	-32.881	741.856	741.856
	GRDR12	3646.810	-40.401	741.735	741.738
	GRDR13	3646.240	-47.920	741.621	741.621
	EABDJT	3645.574	-51.433	741.566	741.566
	GRDR14	3645.671	-55.439	741.503	741.503

LINE	BEAM OR GIRDER	STATION	OFFSET	THEORETICAL GRADE ELEVATION	ELEVATION ADJUSTED FOR DEAD LOAD DEFLECTION
L	GRDR 1	3663.171	43.583	741.638	741.641
	GRDR 2	3662.553	35.417	741.808	741.811
	GRDR 3	3661.934	27.250	741.939	741.942
	WTBDJT	3661.612	23.000	742.006	742.009
	GRDR 4	3661.315	19.083	742.067	742.070
	WESTPG	3660.703	11.000	742.194	742.197
	GRDR 5	3660.697	10.917	742.195	742.198
	GRDR 6	3660.078	2.750	742.323	742.326
	CLRDWY	3659.870	.000	742.366	742.369
	GRDR 7	3659.650	-2.798	742.323	742.326
	GRDR 8	3659.080	-10.293	742.206	742.206
	EASTPG	3659.037	-11.000	742.195	742.195
	GRDR 9	3658.523	-17.786	742.089	742.089
	MDBDJT	3658.128	-23.000	742.008	742.008
	GRDR10	3657.955	-25.280	741.973	741.973
	GRDR11	3657.386	-32.772	741.856	741.856
	GRDR12	3656.820	-40.265	741.739	741.739
	GRDR13	3656.253	-47.756	741.622	741.622
	EABDJT	3655.989	-51.241	741.568	741.568
	GRDR14	3655.685	-55.240	741.505	741.505

LINE	BEAM OR GIRDER	STATION	OFFSET	THEORETICAL GRADE ELEVATION	ELEVATION ADJUSTED FOR DEAD LOAD DEFLECTION
M	GRDR 1	3673.171	43.583	741.625	741.640
	GRDR 2	3672.553	35.417	741.796	741.810
	GRDR 3	3671.934	27.250	741.926	741.942
	WTBDJT	3671.612	23.000	741.993	742.016
	GRDR 4	3671.315	19.083	742.055	742.078
	WESTPG	3670.703	11.000	742.182	742.205
	GRDR 5	3670.697	10.917	742.182	742.207
	GRDR 6	3670.078	2.750	742.312	742.335
	CLRDWY	3669.870	.000	742.355	742.370
	GRDR 7	3669.650	-2.802	742.312	742.335
	GRDR 8	3669.082	-10.260	742.190	742.211
	EASTPG	3669.037	-11.000	742.185	742.200
	GRDR 9	3668.527	-17.734	742.080	742.095
	MDBDJT	3668.128	-23.000	741.998	742.013
	GRDR10	3667.961	-25.159	741.964	741.979
	GRDR11	3667.396	-32.664	741.848	741.863
	GRDR12	3666.831	-40.169	741.732	741.748
	GRDR13	3666.265	-47.692	741.616	741.632
	EABDJT	3666.003	-51.250	741.563	741.578
	GRDR14	3665.700	-55.056	741.501	741.516

LINE	BEAM OR GIRDER	STATION	OFFSET	THEORETICAL GRADE ELEVATION	ELEVATION ADJUSTED FOR DEAD LOAD DEFLECTION
N	GRDR 1	3683.171	43.583	741.604	741.655
	GRDR 2	3682.553	35.417	741.775	741.826
	GRDR 3	3681.934	27.250	741.907	741.958
	WTBDJT	3681.612	23.000	741.974	742.025
	GRDR 4	3681.315	19.083	742.036	742.087
	WESTPG	3680.703	11.000	742.164	742.215
	GRDR 5	3680.697	10.917	742.165	742.216
	GRDR 6	3680.078	2.750	742.294	742.345
	CLRDWY	3679.828	.000	742.337	742.388
	GRDR 7	3679.657	-2.806	742.294	742.345
	GRDR 8	3679.094	-10.244	742.179	742.230
	EASTPG	3679.037	-11.000	742.167	742.200
	GRDR 9	3678.531	-17.681	742.064	742.105
	MDBDJT	3678.128	-23.000	741.982	742.023
	GRDR10	3677.967	-25.118	741.949	741.990
	GRDR11	3677.404	-32.555	741.834	741.875
	GRDR12	3676.841	-39.992	741.719	741.760
	GRDR13	3676.278	-47.428	741.603	741.645
	EABDJT	3676.018	-50.858	741.550	741.592
	GRDR14	3675.714	-54.865	741.488	741.529

LINE	BEAM OR GIRDER	STATION	OFFSET	THEORETICAL GRADE ELEVATION	ELEVATION ADJUSTED FOR DEAD LOAD DEFLECTION
O	GRDR 1	3693.171	43.583	741.576	741.654
	GRDR 2	3692.553	35.417	741.748	741.826
	GRDR 3	3691.934	27.250	741.880	741.958
	WTBDJT	3691.612	23.000	741.947	742.025
	GRDR 4	3691.315	19.083	742.009	742.087
	WESTPG	3690.703	11.000	742.137	742.215
	GRDR 5	3690.697	10.917	742.139	742.217
	GRDR 6	3690.078	2.750	742.268	742.346
	CLRDWY	3689.870	.000	742.312	742.390
	GRDR 7	3689.657	-2.811	742.269	742.347
	GRDR 8	3689.096	-10.220	742.154	742.222
	EASTPG	3689.037	-11.000	742.142	742.210
	GRDR 9	3688.535	-17.629	742.040	742.108
	MDBDJT	3688.128	-23.000	741.957	742.025
	GRDR10	3687.974	-25.038	741.926	741.994
	GRDR11	3687.412	-32.447	741.812	741.880
	GRDR12	3686.851	-39.856	741.697	741.766
	GRDR13	3686.290	-47.265	741.583	741.651
	EABDJT	3686.032	-50.667	741.531	741.599
	GRDR14	3685.729	-54.673	741.469	741.537

LINE	BEAM OR GIRDER	STATION	OFFSET	THEORETICAL GRADE ELEVATION	ELEVATION ADJUSTED FOR DEAD LOAD DEFLECTION
P	GRDR 1	3703.171	43.583	741.561	741.638
	GRDR 2	3702.553	35.417	741.733	741.810
	GRDR 3	3701.934	27.250	741.866	741.943
	WTBDJT	3701.612	23.000	741.933	742.010
	GRDR 4	3701.315	19.083	741.976	742.073
	WESTPG	3700.703	11.000	742.104	742.201
	GRDR 5	3700.697	10.917	742.105	742.202
	GRDR 6	3700.078	2.750	742.235	742.332
	CLRDWY	3699.870	.000	742.279	742.376
	GRDR 7	3699.657	-2.815	742.236	742.333
	GRDR 8	3699.098	-10.155	742.123	742.211
	EASTPG	3699.037	-11.000	742.110	742.196
	GRDR 9	3698.535	-17.576	742.009	742.097
	MDBDJT	3698.128	-23.000	741.926	742.014
	GRDR10	3697.980	-24.957	741.896	741.984
	GRDR11	3697.421	-32.358	741.782	741.870
	GRDR12	3696.862	-39.719	741.669	741.757
	GRDR13	3696.303	-47.101	741.556	741.644
	EABDJT	3696.047	-50.475	741.504	741.592
	GRDR14	3695.743	-54.482	741.442	741.530

LINE	BEAM OR GIRDER	STATION	OFFSET	THEORETICAL GRADE ELEVATION	ELEVATION ADJUSTED FOR DEAD LOAD DEFLECTION
Q	GRDR 1	3713.171	43.583	741.499	741.601
	GRDR 2	3712.553	35.417	741.671	741.773
	GRDR 3	3711.934	27.250	741.804	741.906
	WTBDJT	3711.612	23.000	741.872	741.974
	GRDR 4	3711.315	19.083	741.934	742.036
	WESTPG	3710.703	11.000	742.064	742.166
	GRDR 5	3710.697	10.917	742.065	742.167
	GRDR 6	3710.078	2.750	742.195	742.297
	CLRDWY	3709.870	.000	742.239	742.341
	GRDR 7	3709.657	-2.819	742.196	742.298
	GRDR 8	3709.100	-10.171	742.093	742.178
	EASTPG	3709.037	-11.000	742.071	742.166
	GRDR 9	3708.543	-17.524	741.971	742.066
	MDBDJT	3708.128	-23.000	741.887	741.982
	GRDR10	3707.996	-24.076	741.858	741.953
	GRDR11	3707.429	-32.230	741.746	741.841
	GRDR12	3706.872	-39.583	741.633	741.728
	GRDR13	3706.315	-46.937	741.521	741.616
	EABDJT	3706.061	-50.284	741.469	741.564
	GRDR14	3705.758	-54.290	741.408	741.503

LINE	BEAM OR GIRDER	STATION	OFFSET	THEORETICAL GRADE ELEVATION	ELEVATION ADJUSTED FOR DEAD LOAD DEFLECTION
R	GRDR 1	3723.171	43.583	741.449	741.539
	GRDR 2	3722.553	35.417	741.622	741.712
	GRDR 3	3721.934	27.250	741.755	741.845
	WTBDJT	3721.612	23.000	741.823	741.913
	GRDR 4	3721.315	19.083	741.886	741.976
	WESTPG	3720.703	11.000	742.016	742.106
	GRDR 5	3720.697	10.917	742.017	742.107
	GRDR 6	3720.078	2.750	742.148	742.238
	CLRDWY	3719.870	.000	742.192	742.282
	GRDR 7	3719.656	-2.823	742.149	742.239
	GRDR 8	3719.101	-10.147	742.037	742.124
	EASTPG	3719.037	-11.000	742.024	742.111
	GRDR 9	3718.547	-17.471	741.925	742.012
	MDBDJT	3718.128	-23.000	741.841	741.928
	GRDR10	3717.992	-24.795	741.814	741.901
	GRDR11	3717.437	-32.121	741.702	741.789
	GRDR12	3716.882	-39.447	741.590	741.677
	GRDR13	3716.327	-46.773	741.478	741.565
	EABDJT	3716.076	-50.092	741.428	741.515
	GRDR14	3715.772	-54.099	741.367	741.653

LINE	BEAM OR GIRDER	STATION	OFFSET	THEORETICAL GRADE ELEVATION	ELEVATION ADJUSTED FOR DEAD LOAD DEFLECTION
S	GRDR 1	3733.171	43.583	741.392	741.454
	GRDR 2	3732.553	35.417	741.566	741.628
	GRDR 3	3731.934	27.250	741.699	741.761
	WTBDJT	3731.612	23.000	741.768	741.830
	GRDR 4	3731.315	19.083	741.831	741.893
	WESTPG	3730.703	11.000	741.960	742.022
	GRDR 5	3730.697	10.917	741.962	742.024
	GRDR 6	3730.078	2.750	742.093	742.155
	CLRDWY	3729.870	.000	742.137	742.199
	GRDR 7	3729.656	-2.827	742.094	742.156
	GRDR 8	3729.103	-10.122	741.984	742.047
	EASTPG	3729.037	-11.000	741.970	742.034
	GRDR 9	3728.551	-17.418	741.873	741.937
	MDBDJT	3728.128	-23.000	741.788	741.852
	GRDR10	3727.990	-24.735	741.762	741.826
	GRDR11	3727.445	-32.012	741.651	741.715
	GRDR12	3726.893	-39.318	741.540	741.604
	GRDR13	3726.340	-46.600	741.429	741.493
	EABDJT	3726.090	-49.901	741.379	741.442
	GRDR14	3725.787	-53.908	741.318	741.382

DESIGNED	L.L. VIELEY
CHECKED	
DRAWN	C.D. SNEDDEN
CHECKED	L.L.V.

TOP OF SLAB ELEVATIONS

F.A.I. 74 & F.A.U. 6789
SECTION (90-15-1,15-1HB,15W)-1
TAZEWELL COUNTY
STATION 36+49.87

FOR INFORMATION ONLY

benesch
engineers · scientists · planners
Alfred Benesch & Company
205 North Michigan Avenue, Suite 2400
Chicago, Illinois 60601
312-565-0450 Job No. 10056

FILE NAME = 0900141_68620_19_exist5.dgn	USER NAME = mbecker	DESIGNED - JDC	REVISED -
		CHECKED - MRB	REVISED -
	PLOT SCALE =	DRAWN - PRT	REVISED -
	PLOT DATE = 7/16/2012	CHECKED - MRB	REVISED -

STATE OF ILLINOIS
DEPARTMENT OF TRANSPORTATION

EXISTING PLANS
STRUCTURE NO. 090-0141
SHEET NO. SD19 OF SD29 SHEETS

F.A.I. RTE.	SECTION	COUNTY	TOTAL SHEETS	SHEET NO.
74	90-(14R;(14HB-4,14,14HVB)BR)	TAZEWELL	2433	2058
		CONTRACT NO. 68620		
		ILLINOIS FED. AID PROJECT		

X:\10000S\10056\Engineering_Documents_Phase_II\MortonOverI74\Final\0900141_68620_19_exist5.dgn 7:37:13 AM 7/16/2012

STATE OF ILLINOIS
DEPARTMENT OF TRANSPORTATION

RTE.	SECTION	COUNTY	TOTAL SHEETS	SHEET NO.
FAI 74	*	TAZEWELL	26	37
STA.		TO STA.		
F.H.W.A. REG.		ILLINOIS		

*(90-15-1,15-1HB,15 W)-1

SHEET 7 OF 22

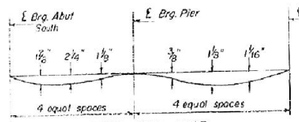

WEST STRUCTURE
DEAD LOAD DEFLECTION DIAGRAM

(Includes weight of concrete only)

Note: The above deflections are not to be used in the field if the engineer is working from the grade elevations adjusted for dead load deflections as shown below.

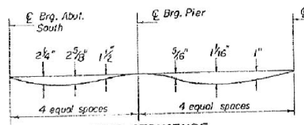

EAST STRUCTURE
DEAD LOAD DEFLECTION DIAGRAM

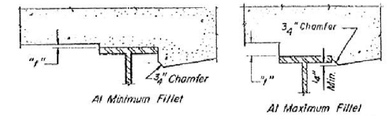

To determine "t": After all structural steel has been erected, elevations of the top flanges of the beams shall be taken at intervals shown below. These elevations subtracted from the "Theoretical Grade Elevations Adjusted for Dead Load Deflection" shown below, minus slab thickness, equals the fillet heights "t" above top flange of beams.

FILLET HEIGHTS

	Location	Station	Offset	Theoretical Grade Elevations	Theoretical Grade Elevations Adjusted For Dead Load Deflection
T	GRDR 1	3743.171	43.583	741.328	741.350
	GRDR 2	3742.553	35.417	741.501	741.524
	GRDR 3	3741.934	27.250	741.636	741.658
	WTBDJT	3743.612	23.000	741.704	741.726
	GRDR 4	3741.315	19.083	741.768	741.790
	WESTPG	3740.703	11.000	741.898	741.920
	GRDR 5	3740.697	10.917	741.899	741.921
	GRDR 6	3740.078	2.750	742.031	742.053
	CLRDWY	3739.870	.000	742.075	742.097
	GRDR 7	3739.656	-2.833	742.033	742.055
	GRDR 8	3739.105	-10.083	741.933	741.952
	EASTPG	3739.017	-11.000	741.909	741.938
	GRDR 9	3738.555	-17.366	741.813	741.841
	MDBDJT	3738.120	-23.000	741.727	741.756
	GRDR10	3738.004	-24.635	741.703	741.731
	GRDR11	3737.454	-31.904	741.592	741.621
	GRDR12	3736.903	-39.174	741.402	741.511
	GRDR13	3736.352	-46.445	741.372	741.401
	EABDJT	3736.165	-49.760	741.323	741.351
	GRDR14	3735.801	-53.716	741.262	741.290

	Location	Station	Offset	Theoretical Grade Elevations	Theoretical Grade Elevations Adjusted For Dead Load Deflection
BENAB	GRDR 1	3749.155	43.583	741.286	741.286
	GRDR 2	3748.701	35.417	741.459	741.459
	GRDR 3	3748.246	27.250	741.592	741.592
	WTBDJT	3748.010	23.000	741.660	741.660
	GRDR 4	3747.792	19.083	741.723	741.723
	WESTPG	3747.342	11.000	741.853	741.853
	GRDR 5	3747.338	10.917	741.854	741.854
	GRDR 6	3746.883	2.750	741.985	741.985
	CLRDWY	3746.730	.000	742.029	742.029
	GRDR 7	3746.572	-2.833	741.986	741.986
	GRDR 8	3746.169	-10.083	741.875	741.875
	EASTPG	3746.110	-11.000	741.861	741.861
	GRDR 9	3745.765	-17.333	741.765	741.765
	MDBDJT	3745.450	-23.000	741.678	741.678
	GRDR10	3745.362	-24.583	741.654	741.654
	GRDR11	3744.958	-31.833	741.544	741.544
	GRDR12	3744.555	-39.083	741.433	741.433
	GRDR13	3744.152	-46.333	741.323	741.323
	EABDJT	3743.971	-49.578	741.273	741.273
	GRDR14	3743.740	-53.583	741.212	741.212

	Location	Station	Offset	Theoretical Grade Elevations	Theoretical Grade Elevations Adjusted For Dead Load Deflection
BNAPPG	GRDR 1	3772.197	43.583	741.100	741.100
	GRDR 2	3771.743	35.417	741.274	741.274
	GRDR 3	3771.288	27.250	741.408	741.408
	WTBDJT	3771.052	23.000	741.477	741.477
	GRDR 4	3770.834	19.083	741.540	741.540
	WESTPG	3770.384	11.000	741.670	741.670
	GRDR 5	3770.379	10.917	741.671	741.671
	GRDR 6	3769.925	2.750	741.803	741.803
	CLRDWY	3769.772	.000	741.847	741.847
	GRDR 7	3769.614	-2.833	741.804	741.804
	GRDR 8	3769.211	-10.083	741.695	741.695
	EASTPG	3769.160	-11.000	741.681	741.681
	GRDR 9	3768.807	-17.333	741.585	741.585
	MDBDJT	3768.492	-23.000	741.499	741.499
	GRDR10	3768.404	-24.583	741.475	741.475
	GRDR11	3768.000	-31.833	741.365	741.365
	GRDR12	3767.597	-39.083	741.255	741.255
	GRDR13	3767.193	-46.333	741.145	741.145
	EABDJT	3767.013	-49.578	741.096	741.096
	GRDR14	3766.790	-53.583	741.036	741.036

	Location	Station	Offset	Theoretical Grade Elevations	Theoretical Grade Elevations Adjusted For Dead Load Deflection
CLBRAB	GRDR 1	3749.155	43.583	741.293	741.293
	GRDR 2	3747.701	35.417	741.466	741.466
	GRDR 3	3747.246	27.250	741.599	741.599
	WTBDJT	3747.010	23.000	741.667	741.667
	GRDR 4	3746.792	19.083	741.730	741.730
	WESTPG	3746.342	11.000	741.860	741.860
	GRDR 5	3746.338	10.917	741.861	741.861
	GRDR 6	3745.883	2.750	741.992	741.992
	CLRDWY	3745.730	.000	742.036	742.036
	GRDR 7	3745.572	-2.833	741.993	741.993
	GRDR 8	3745.169	-10.083	741.882	741.882
	EASTPG	3745.110	-11.000	741.868	741.868
	GRDR 9	3744.765	-17.333	741.772	741.772
	MDBDJT	3744.450	-23.000	741.685	741.685
	GRDR10	3744.362	-24.583	741.661	741.661
	GRDR11	3743.958	-31.833	741.551	741.551
	GRDR12	3743.555	-39.083	741.440	741.440
	GRDR13	3743.152	-46.333	741.330	741.330
	EABDJT	3742.971	-49.578	741.280	741.280
	GRDR14	3742.748	-53.583	741.219	741.219

	Location	Station	Offset	Theoretical Grade Elevations	Theoretical Grade Elevations Adjusted For Dead Load Deflection
U	GRDR 1	3759.155	43.583	741.210	741.210
	GRDR 2	3758.701	35.417	741.384	741.384
	GRDR 3	3758.246	27.250	741.517	741.517
	WTBDJT	3758.010	23.000	741.585	741.585
	GRDR 4	3757.792	19.083	741.648	741.648
	WESTPG	3757.342	11.000	741.778	741.778
	GRDR 5	3757.338	10.917	741.779	741.779
	GRDR 6	3756.883	2.750	741.911	741.911
	CLRDWY	3756.730	.000	741.955	741.955
	GRDR 7	3756.572	-2.833	741.912	741.912
	GRDR 8	3756.169	-10.083	741.802	741.802
	EASTPG	3756.110	-11.000	741.788	741.788
	GRDR 9	3755.765	-17.333	741.691	741.691
	MDBDJT	3755.450	-23.000	741.605	741.605
	GRDR10	3755.362	-24.583	741.581	741.581
	GRDR11	3754.958	-31.833	741.471	741.471
	GRDR12	3754.555	-39.083	741.361	741.361
	GRDR13	3754.152	-46.333	741.251	741.251
	EABDJT	3753.971	-49.578	741.201	741.201
	GRDR14	3753.740	-53.583	741.140	741.140

	Location	Station	Offset	Theoretical Grade Elevations	Theoretical Grade Elevations Adjusted For Dead Load Deflection
BENABT	GRDR 1	3772.697	43.583	741.096	741.096
	GRDR 2	3772.243	35.417	741.270	741.270
	GRDR 3	3771.788	27.250	741.404	741.404
	WTBDJT	3771.552	23.000	741.472	741.472
	GRDR 4	3771.334	19.083	741.535	741.535
	WESTPG	3770.884	11.000	741.666	741.666
	GRDR 5	3770.879	10.917	741.667	741.667
	GRDR 6	3770.425	2.750	741.799	741.799
	CLRDWY	3770.272	.000	741.843	741.843
	GRDR 7	3770.114	-2.833	741.800	741.800
	GRDR 8	3769.709	-10.083	741.690	741.690
	EASTPG	3769.658	-11.000	741.676	741.676
	GRDR 9	3769.305	-17.333	741.586	741.586
	MDBDJT	3768.990	-23.000	741.495	741.495
	GRDR10	3768.902	-24.583	741.471	741.471
	GRDR11	3768.498	-31.833	741.361	741.361
	GRDR12	3768.095	-39.083	741.251	741.251
	GRDR13	3767.692	-46.333	741.141	741.141
	EABDJT	3767.511	-49.578	741.092	741.092
	GRDR14	3767.286	-53.583	741.031	741.031

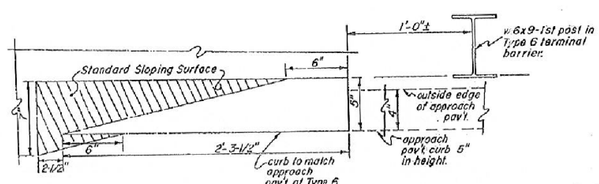

PLAN

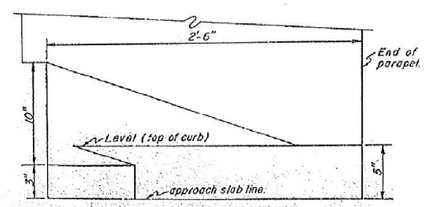

ELEVATION

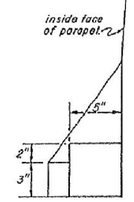

END VIEW

BRUSH BLOCK/APPROACH SHOULDER CURB DETAIL
SCALE 3/16" = 1'-0"

DESIGNED	L. L. VIELEY
CHECKED	
DRAWN	C. D. SNEDDEN
CHECKED	L.L.V.

E-S 6-1-82

TOP OF SLAB ELEVATIONS

F.A.I. 74 & F.A.U. 6729
SECTION (90-15-1,15-1HB,15W)-1
TAZEWELL COUNTY
STATION 36+49.87

R.A.N. CONSULTANTS INC.

FAI 74 (I-74) / FAU 6729 (MORTON AVE.)

86410

6-24-92

FOR INFORMATION ONLY

benesch
engineers · scientists · planners
Alfred Benesch & Company
205 North Michigan Avenue, Suite 2400
Chicago, Illinois 60601
312-565-0450 Job No. 10056

FILE NAME = 0900141_68620_20_exist6.dgn	USER NAME = mbecker	DESIGNED - JDC	REVISED -
		CHECKED - MRB	REVISED -
	PLOT SCALE =	DRAWN - PRT	REVISED -
	PLOT DATE = 7/16/2012	CHECKED - MRB	REVISED -

STATE OF ILLINOIS
DEPARTMENT OF TRANSPORTATION

EXISTING PLANS
STRUCTURE NO. 090-0141

SHEET NO. SD20 OF SD29 SHEETS

F.A.I. RTE.	SECTION	COUNTY	TOTAL SHEETS	SHEET NO.
74	90-(14R;(14HB-4,14,14HVB)BR)	TAZEWELL	2433	2059
		CONTRACT NO. 68620		
		ILLINOIS FED. AID PROJECT		

X:\10000S\10056\Engineering_Documents_Phase_II\MortonOver174\Final\0900141_68620_20_exist6.dgn 7:37:24 AM 7/16/2012

STATE OF ILLINOIS
DEPARTMENT OF TRANSPORTATION

RTE.	SECTION	COUNTY	TOTAL SHEETS	SHEET NO.
FAI 74	*	TAZEWELL	2360	1384
STA.		TO STA.		
K.M.P.A. REG.		ILLINOIS		

X-190-15-1,15-1HB,15W)-1

SHEET 8 OF 22

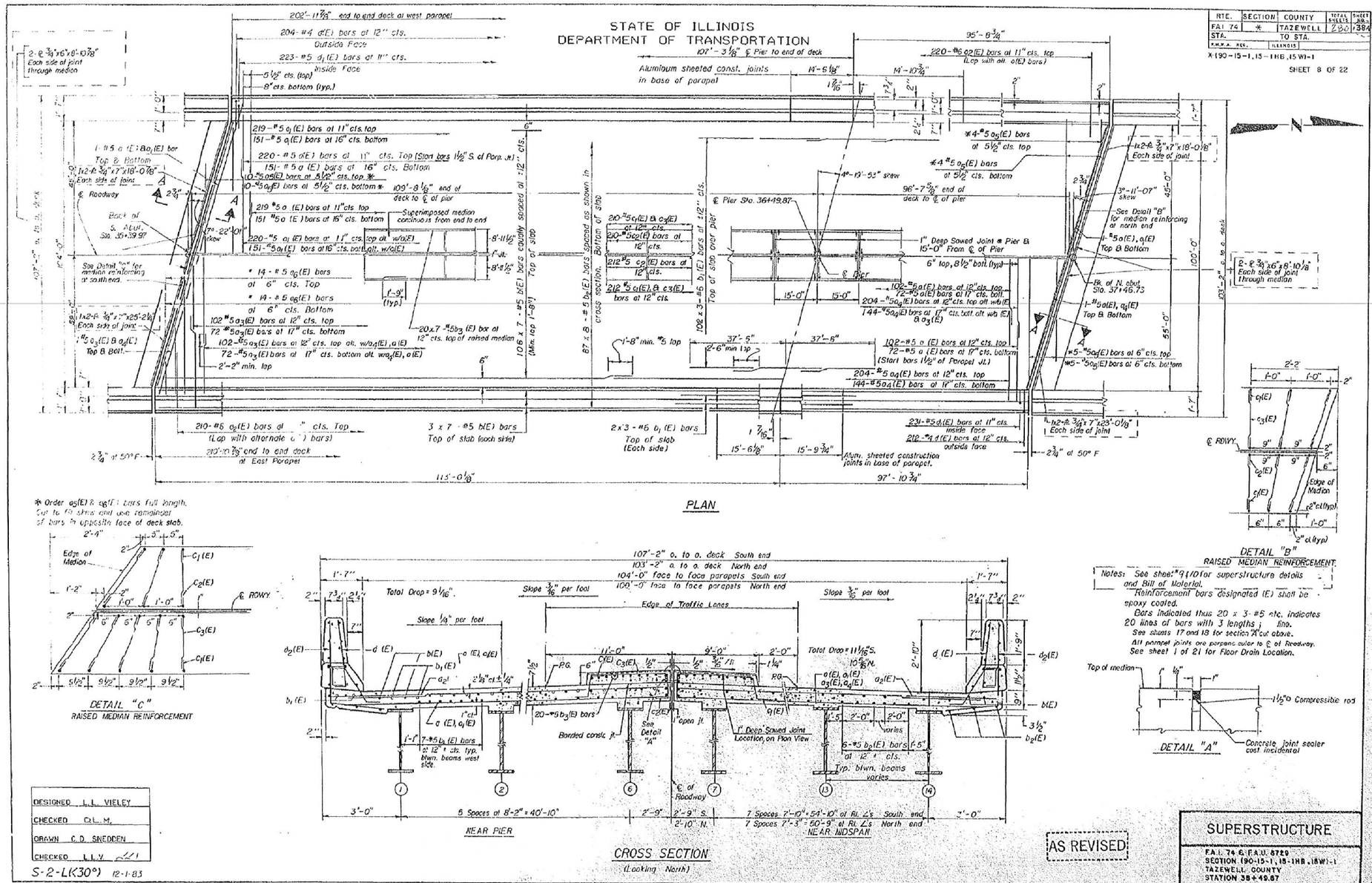

DESIGNED	L.L. VIELEY
CHECKED	D.L.M.
DRAWN	C.D. SNEDDEN
CHECKED	L.L.V.

S-2-L(K30°) 12-1-83

R.A.N. CONSULTANTS INC.

FAI 74 (I-74) / FAU 6729 (MORTON AVE.)

AS REVISED

SUPERSTRUCTURE

F.A.I. 74 & F.A.U. 6729
SECTION (90-15-1, 15-1HB, 15W)-1
TAZEWELL COUNTY
STATION 38+49.67

Revised 1/27/95 WJS

FOR INFORMATION ONLY

benesch
engineers · scientists · planners

Alfred Benesch & Company
205 North Michigan Avenue, Suite 2400
Chicago, Illinois 60601
312-565-0450 Job No. 10056

FILE NAME = 0900141_68620_21_exist7.dgn	USER NAME = mbecker	DESIGNED - JDC	REVISED -
		CHECKED - MRB	REVISED -
	PLOT SCALE =	DRAWN - PRT	REVISED -
	PLOT DATE = 7/16/2012	CHECKED - MRB	REVISED -

STATE OF ILLINOIS
DEPARTMENT OF TRANSPORTATION

EXISTING PLANS
STRUCTURE NO. 090-0141
SHEET NO. SD21 OF SD29 SHEETS

F.A.I. RTE.	SECTION	COUNTY	TOTAL SHEETS	SHEET NO.
74	90-(14R;(14HB-4,14,14HVB)BR)	TAZEWELL	2433	2060
		CONTRACT NO. 68620		
		ILLINOIS FED. AID PROJECT		

7/16/2012 7:37:36 AM X:\100005\10056\Engineering_Documents_Phase_II\MortonOver174\Final\0900141_68620_21_exist7.dgn

RTE.	SECTION	COUNTY	TOTAL SHEETS	SHEET NO.
FAI 74	*	TAZEWELL	280	404
STA.		TO STA.		
F.H.W.A. REG.	ILLINOIS			

*(90-15-1,15-1HB,15W)-1

SHEET 10 OF 22

STATE OF ILLINOIS
DEPARTMENT OF TRANSPORTATION

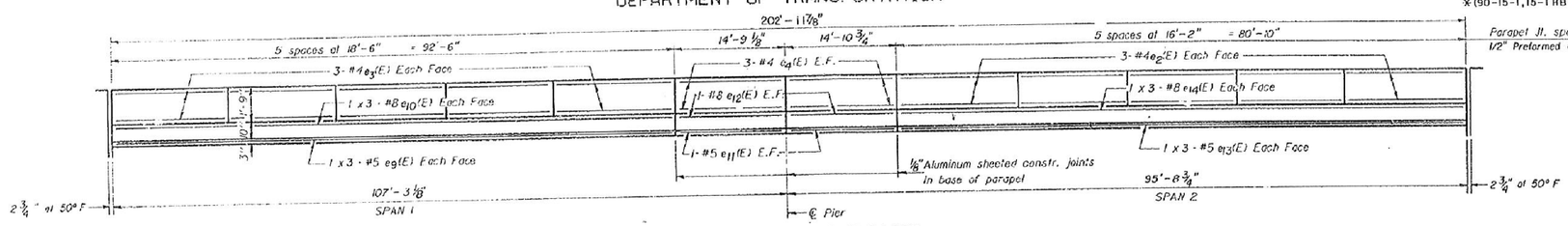

INSIDE ELEVATION OF PARAPET
(LOOKING WEST)

NOTE: FOR SLIPFORM PARAPET DETAIL SEE SHEET 80A.

NOTE: SEE SHEET 9 of 21 (BRIDGE PLANS) FOR BILL OF MATERIALS

MINIMUM BAR LAP
No. 5 bars = 2'-2"
No. 8 bars = 4'-6"

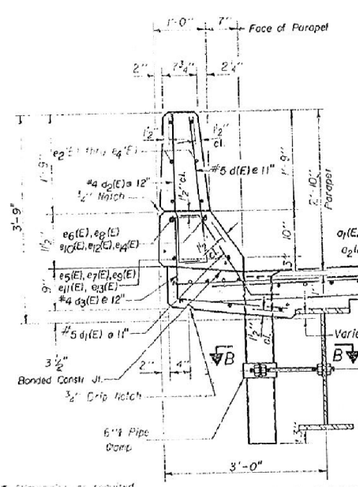

SECTION THRU PARAPET

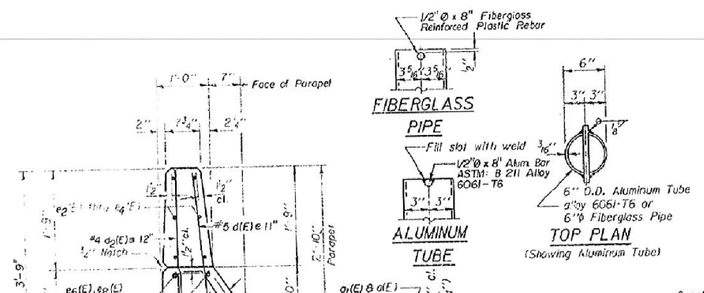

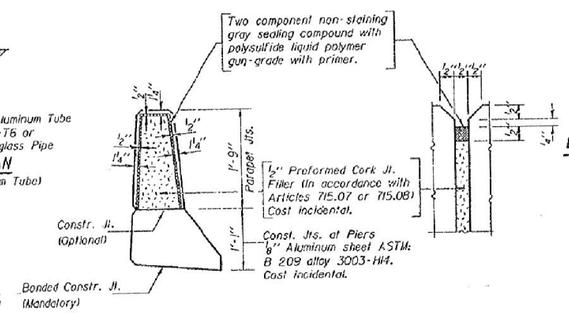

PARAPET JOINT DETAILS

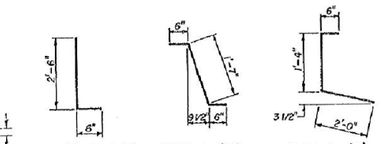

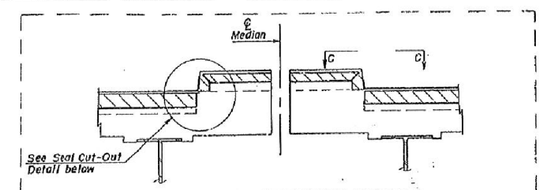

TYP. SEAL TREATMENT @ MEDIAN

Notes:
The exterior surfaces of the Floor Drain shall be painted with the vinyl enamel coal painting specified for Structural Steel. The exterior surfaces of the Aluminum tube shall be cleaned and given a washcoat pretreatment in accordance with Steel Structures Painting Council's Spec. SSPC-SP1 & SSPC-Paint 27 prior to painting.
Fiberglass pipe shall conform to ASTM: D2996, with short-time rupture strength hoop tensile stress of 30,000 p.s.i. minimum. The surface of the Fiberglass pipe shall be free of bond inhibiting agents.

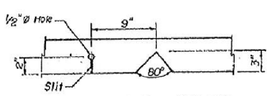

SEAL CUT-OUT @ MEDIAN

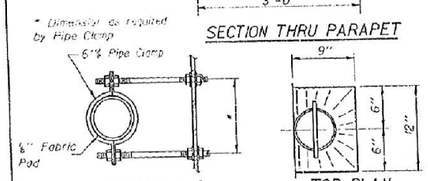

SECTION B-B

TOP PLAN

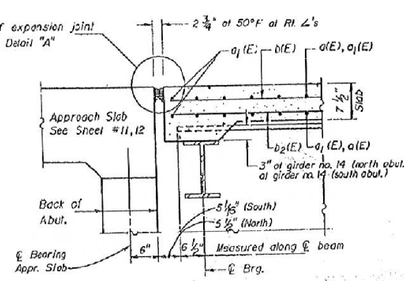

SECTION A-A

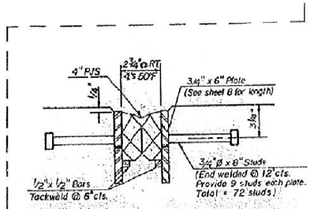

EXPANSION JOINT DETAIL IN MEDIAN

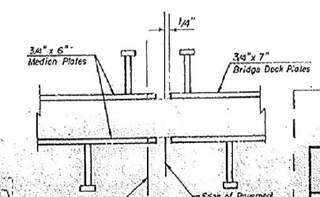

VIEW C-C

DESIGNED	L.L. VIELEY
CHECKED	L.L.V.
DRAWN	C.D. SNEDDEN
CHECKED	L.L.V.

S-2-D 7-1-91

R.A.N. CONSULTANTS INC.

AS REVISED

WEST SUPERSTRUCTURE DETAILS
F.A.I. 74 & F.A.U. 6729
SECTION (90-15-1, 15-1HB, 15W)-1
TAZEWELL COUNTY
STATION 36+49.87

REVISED 1/27/93 NJS

FAI 74 (I-74) / FAU 6729 (MORTON AVE.)

6-24-92

FOR INFORMATION ONLY

benesch
engineers · scientists · planners
Alfred Benesch & Company
205 North Michigan Avenue, Suite 2400
Chicago, Illinois 60601
312-565-0450 Job No. 10056

FILE NAME =	USER NAME = mbecker	DESIGNED - JDC	REVISED -
		CHECKED - MRB	REVISED -
090014I_68620.22_exist8.dgn	PLOT SCALE =	DRAWN - PRT	REVISED -
	PLOT DATE = 7/16/2012	CHECKED - MRB	REVISED -

STATE OF ILLINOIS
DEPARTMENT OF TRANSPORTATION

EXISTING PLANS
STRUCTURE NO. 090-0141
SHEET NO. SD22 OF SD29 SHEETS

F.A.I. RTE.	SECTION	COUNTY	TOTAL SHEETS	SHEET NO.
74	90-[14R;(14HB-4,14,14HVB)BR]	TAZEWELL	2433	2061
		CONTRACT NO. 68620		
		ILLINOIS FED. AID PROJECT		

7/16/2012 7:37:47 AM X:\10000S\10056\Engineering_Documents_Phase_II\MortonOver174\Final\0900141_68620_22_exist8.dgn

STATE OF ILLINOIS
DEPARTMENT OF TRANSPORTATION

RTE.	SECTION	COUNTY	TOTAL SHEETS	SHEET NO.
FAI 74	*	TAZEWELL	2,50	41
STA.		TO STA.		
F.H.W.A. REG.	ILLINOIS			

*190-15-1, 15-1 HB, 15 W)-1

SHEET 11 OF 22

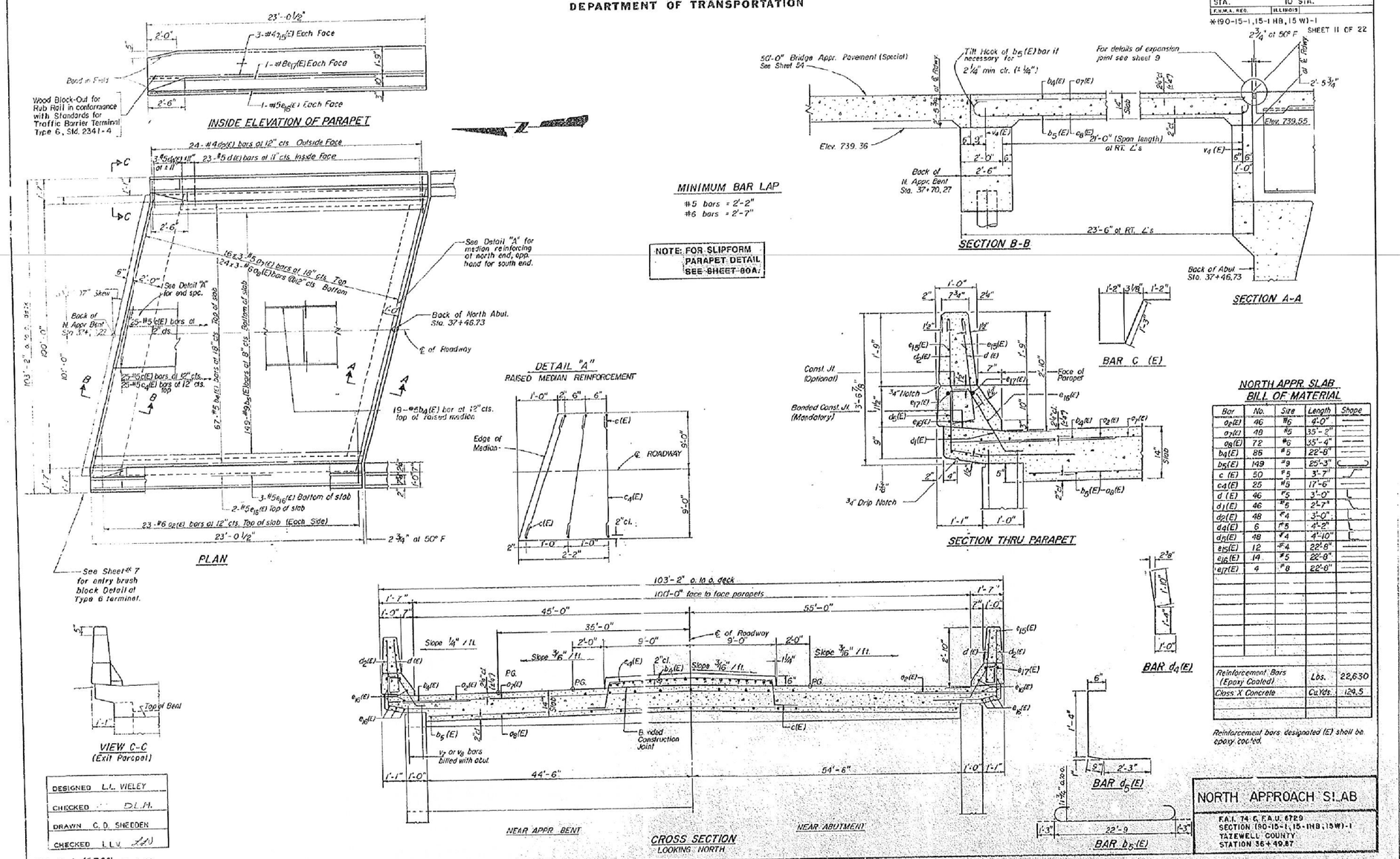

NORTH APPR SLAB BILL OF MATERIAL

Bar	No.	Size	Length	Shape
a_8(E)	46	#6	4'-0"	
a_7(E)	48	#6	35'-2"	
a_8(E)	72	#6	35'-4"	
b_4(E)	86	#5	22'-8"	
b_5(E)	149	#9	25'-3"	
c (E)	50	#5	3'-7"	
c_4(E)	25	#5	17'-6"	
d (E)	46	#5	3'-0"	
d_1(E)	46	#5	2'-7"	
d_2(E)	48	#4	3'-0"	
d_4(E)	6	#5	4'-2"	
d_5(E)	48	#4	4'-10"	
e_{15}(E)	12	#4	22'-8"	
e_{16}(E)	14	#5	22'-8"	
e_{17}(E)	4	#8	22'-8"	
Reinforcement Bars (Epoxy Coated)			Lbs.	22,630
Class X Concrete			Cu.Yds.	129.5

Reinforcement bars designated (E) shall be epoxy coated.

DESIGNED	L.L. WIELEY
CHECKED	D.L.M.
DRAWN	C. D. SHEEDEN
CHECKED	L.L.W.

SA-2-L (≦30°) 6-1-89

R.A.N. CONSULTANTS INC.

NORTH APPROACH SLAB

F.A.I. 74 (I-74) F.A.U. 6729
SECTION (90-15-1, 15-1HB, 15W)-1
TAZEWELL COUNTY
STATION 36+49.87

FAI 74 (I-74) / FAU 6729 (MORTON AVE.)

86310

6-24-92

FOR INFORMATION ONLY

benesch
engineers · scientists · planners

Alfred Benesch & Company
205 North Michigan Avenue, Suite 2400
Chicago, Illinois 60601
312-565-0450 Job No. 10056

FILE NAME =	USER NAME = mbecker	DESIGNED - JDC	REVISED -
0900141_68620_23_exist9.dgn		CHECKED - MRB	REVISED -
	PLOT SCALE =	DRAWN - PRT	REVISED -
	PLOT DATE = 7/16/2012	CHECKED - MRB	REVISED -

STATE OF ILLINOIS
DEPARTMENT OF TRANSPORTATION

EXISTING PLANS
STRUCTURE NO. 090-0141
SHEET NO. SD23 OF SD29 SHEETS

F.A.I. RTE.	SECTION	COUNTY	TOTAL SHEETS	SHEET NO.
74	90-(14R;(14HB-4,14,14HVB)BR)	TAZEWELL	2433	2062
		CONTRACT NO. 68620		
	ILLINOIS FED. AID PROJECT			

X:\100005\10056\Engineering_Documents_Phase_II\MortonOver174\Final\0900141_68620_23_exist9.dgn 7:37:58 AM 7/16/2012

STATE OF ILLINOIS
DEPARTMENT OF TRANSPORTATION

RTE.	SECTION	COUNTY	TOTAL SHEETS	SHEET NO.
FAI 74	*	TAZEWELL	250	42
STA.		TO STA.		
F.A.P. V.S. REG.		ILLINOIS		

* (90-15-1, 15-1 HB, 15W)-1

SHEET 12 OF 22

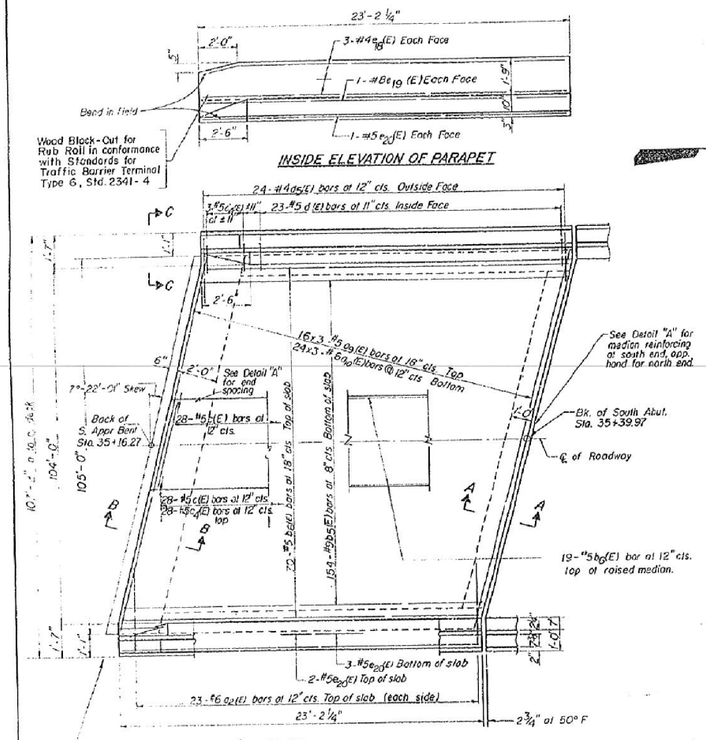

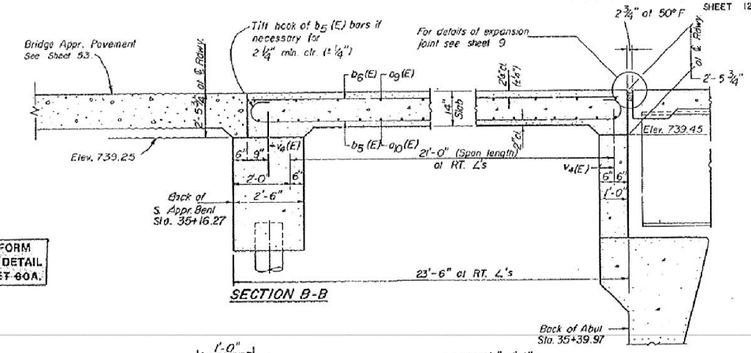

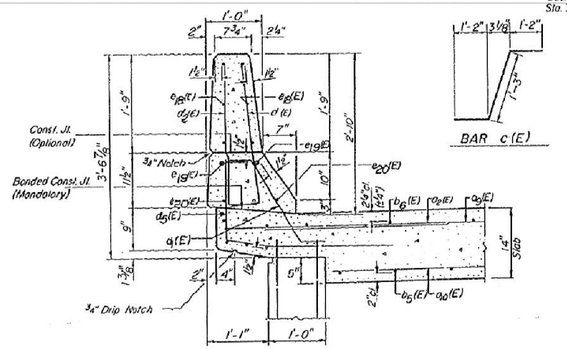

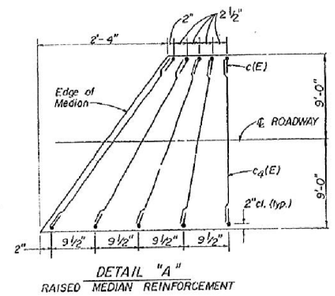

MINIMUM BAR LAP
#5 bars = 2'-2"
#6 bars = 2'-7"

NOTE: FOR SLIPFORM PARAPET DETAIL SEE SHEET 60A.

SOUTH APPR. SLAB
BILL OF MATERIAL

Bar	No.	Size	Length	Shape
a2(E)	46	#6	4'-0"	
a3(E)	48	#5	36'-6"	
a7(E)	72	#6	36'-3"	
b5(E)	154	#9	25'-3"	
b6(E)	89	#5	22'-10"	
c(E)	56	#5	3'-2"	
c4(E)	28	#5	17'-6"	
d(E)	46	#5	3'-0"	
d1(E)	46	#5	2'-7"	
d2(E)	48	#4	3'-0"	
d4(E)	6	#5	4'-2"	
d5(E)	48	#4	4'-10"	
e18(E)	12	#4	22'-10"	
e19(E)	4	#8	22'-10"	
e20(E)	14	#5	22'-10"	
Reinforcement Bars (Epoxy Coated)			Lbs.	23,390
Class X Concrete			Cu.Yds.	129.0

Reinforcement bars designated (E) shall be epoxy coated.

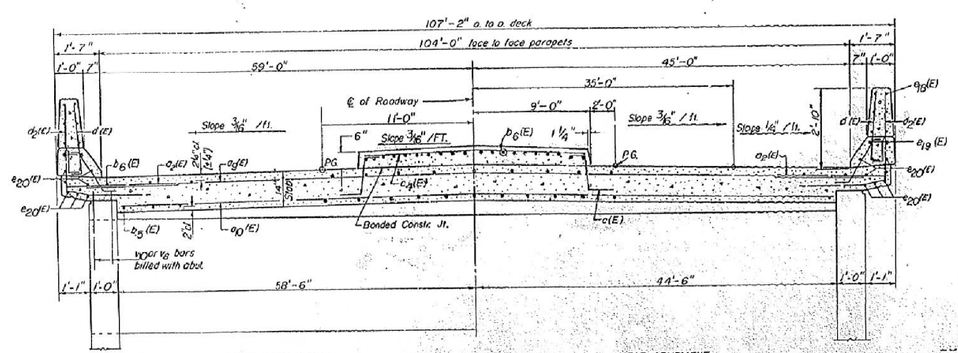

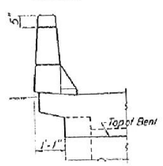

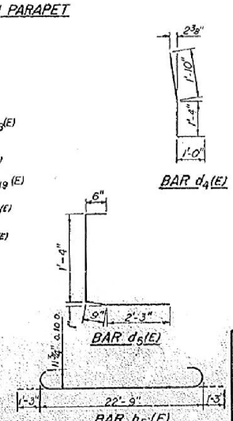

DESIGNED	L.L. VIELEY
CHECKED	D.L.H.
DRAWN	C.D. SNEDDEN
CHECKED	L.V.

SA-2-L (≤30°) 6-1-89

R.A.N. CONSULTANTS INC.

SOUTH APPROACH SLAB

F.A.I. 74 & F.A.U. 6729
SECTION (90-15-1, 15-1HB, 15W)-1
TAZEWELL COUNTY
STATION 36+49.87

FAI 74 (I-74) / FAU 6729 (MORTON AVE.)

6-24-92

FOR INFORMATION ONLY

benesch
engineers · scientists · planners
Alfred Benesch & Company
205 North Michigan Avenue, Suite 2400
Chicago, Illinois 60601
312-565-0450 Job No. 10056

FILE NAME =	USER NAME = mbecker	DESIGNED - JDC	REVISED -
		CHECKED - MRB	REVISED -
0900141_68620_24_exist10.dgn	PLOT SCALE =	DRAWN - PRT	REVISED -
	PLOT DATE = 7/16/2012	CHECKED - MRB	REVISED -

STATE OF ILLINOIS
DEPARTMENT OF TRANSPORTATION

EXISTING PLANS
STRUCTURE NO. 090-0141
SHEET NO. SD24 OF SD29 SHEETS

F.A.I. RTE.	SECTION	COUNTY	TOTAL SHEETS	SHEET NO.
74	90-(14R;14HB-4,14,14HVB)BR)	TAZEWELL	2433	2063
		CONTRACT NO. 68620		
		ILLINOIS FED. AID PROJECT		

7:38:10 AM X:\100005\10056\Engineering_Documents_Phase_II\MortonOver174\Final\0900141_68620_24_exist10.dgn 7/16/2012

STATE OF ILLINOIS
DEPARTMENT OF TRANSPORTATION

RTE.	SECTION	COUNTY	TOTAL SHEETS	SHEET NO.
FAI 74	*	TAZEWELL	290	43
STA.		TO STA.		
F.H.W.A. REG.	ILLINOIS			

* (90-15-1, 15-1HB, 15W)-1

SHEET 13 OF 22

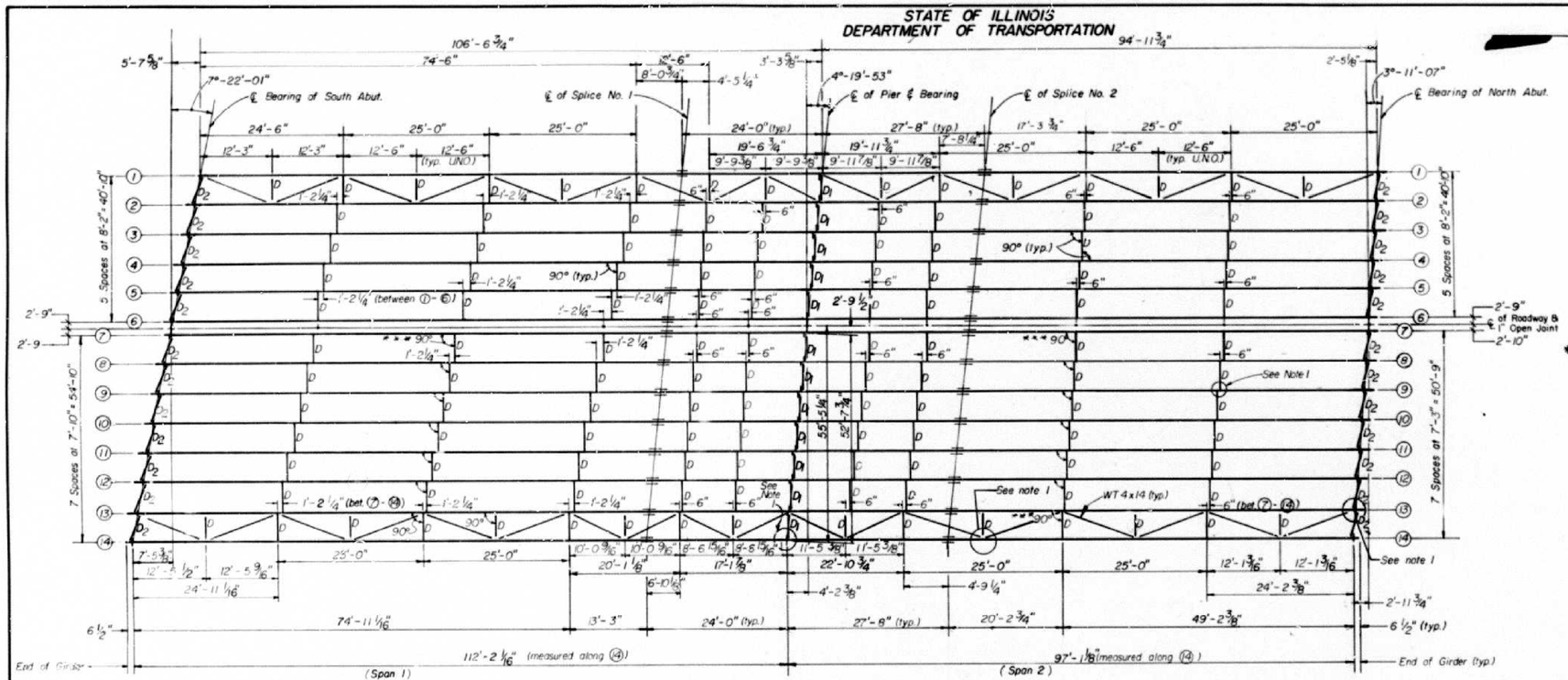

Note 1 -
See Sheet 14
For Bracing Connection Details
at Diaphragms D_1, D_1, D_2. Midspan of D_1
Aligns with ℄ Pier.

EAST STRUCTURE

INTERIOR GIRDER MOMENT TABLE

	0.4 Span 1	Pier	0.6 Span 2
Is (in.4)	16218.1	23944.9	13261.3
Ic (in.4)	48836.8	—	36975.0
Ss (in.3)	906.7	1049.6	640.5
Sc (in.3)	1301.2	—	935.6
℄ (K/i)	0.91	1.20	0.91
M℄ ('K)	803.3	1459.1	431.7
s℄ (K/i)	0.29	—	0.29
Ms℄ ('K)	302.5	367.2	193.3
Mℓ ('K)	1036.2	722.1	840.3
Mimp. ('K)	217.6	158.8	193.3
S_3(Mℓ+I) ('K)	2089.7	1468.2	1722.7
Ma ('K)	4154.2	4282.9	3052.0
Mu ('K)	4970.3	4373.3	3636.5
fs℄ non-comp (k.s.i)	10.6	16.7	8.1
fs℄ (comp) (k.s.i.)	2.8	4.2	2.5
fsS_3 (ℓ+I) (k.s.i.)	19.3	16.8	22.1
fs (Overload) (k.s.i.)	32.7	37.7	32.7
fs (Total) (ksi.)	42.5	49.0	42.5
VR (K)	59.0	—	58.7

INTERIOR GIRDER REACTION TABLE

	S. Abut.	Pier	N. Abut.
R℄ (K)	52.3	162.7	38.9
Rℓ (K)	51.2	78	46.1
Imp. (K)	10.7	17.2	10.6
RTotal (K)	114.3	257.9	95.6

WEST STRUCTURE

INTERIOR GIRDER MOMENT TABLE

	0.4 Span 1	Pier	0.6 Span 2
Is (in4)	16218.1	23944.9	13261.3
Ic (in4)	48836.8	—	36975.0
Ss (in3)	906.7	1049.6	640.5
Sc (in3)	1301.2	—	935.6
℄ (K/i)	0.98	1.31	0.98
M℄ ('K)	795.94	1482.3	462.4
s℄ (K/i)	0.33	—	0.33
Ms℄ ('K)	322.1	396.2	218.3
Mℓ ('K)	1058.8	730.6	896.4
Mimp ('K)	226.6	160.7	202.6
S_3(Mℓ+I) ('K)	2142.3	1485.5	1831.7
Ma ('K)	4238.4	4373.2	3266.1
Mu ('K)	4972.1	4373.3	3617.6
fs℄ non-comp (k.s.i)	10.5	16.9	8.7
fs℄ (comp) (k.s.i)	3.0	4.5	2.8
fsS_3 (ℓ+I) (k.s.i)	19.8	17.0	23.5
fs (Overload) (ksi)	33.3	38.4	35.0
fs (Total) (k.s.i)	43.3	49.9	45.5
VR (K)	61.5	—	60.9

INTERIOR GIRDER REACTION TABLE

	S. Abut	Pier	N. Abut.
R℄ (K)	53.6	171.7	42.2
Rℓ (K)	52.9	88.8	52.0
Imp. (K)	11.3	18.0	11.7
RTotal (K)	117.8	271.5	105.9

Is and Ss are the moment of inertia and section modulus of the steel section used in computing fs (Total and Overload).

Ic and Sc are the moment of inertia and section modulus of the composite section used in computing fs (Total and Overload).

VR is the maximum ℓ + impact shear range in span.

fs (Total) is the sum of the stresses due to- 1.3 [M℄ + Ms℄ + S_3(Mℓ + I)]

fs (Overload) is the sum of stresses due to - M℄ + Ms℄ + S_3 (Mℓ + I)

M℄ - Moment due to dead loads on non-composite section.

Ms℄ - Moment due to dead loads on composite section.

Mℓ - Moment due to live load on non-composite or composite section.

I - Live load impact.

* Mu = Moment capacity for braced non-compact section computed according to AASHTO 10.48.2 and 10.50.1

** Ma (Applied moment) = 1.3 [M℄ + Ms℄ + S_3(Mℓ + I)]

TOP OF WEB ELEVATIONS

WEST STRUCTURE ← | → EAST STRUCTURE

LOCATION	GDR. 1	GDR. 2	GDR. 3	GDR. 4	GDR. 5	GDR. 6	GDR. 7	GDR. 8	GDR. 9	GDR. 10	GDR. 11	GDR. 12	GDR. 13	GDR. 14
℄ Brg. S. Abutment	740.49	740.66	740.78	740.90	741.02	741.14	741.13	741.00	740.87	740.74	740.61	740.48	740.35	740.22
℄ Splice No. 1	740.82	741.00	741.12	741.25	741.38	741.51	741.51	741.39	741.27	741.15	741.04	740.92	740.80	740.68
℄ Brg. Pier	740.78	740.96	741.08	741.21	741.34	741.47	741.47	741.35	741.23	741.11	741.00	740.88	740.76	740.64
℄ Splice No. 2	740.74	740.92	741.04	741.17	741.30	741.43	741.43	741.31	741.19	741.07	740.96	740.84	740.72	740.60
℄ Brg. N. Abutment	740.53	740.71	740.84	740.97	741.10	741.23	741.23	741.12	741.01	740.90	740.79	740.68	740.57	740.46

For fabrication only, does not include dead load deflection

TOP OF WEB CAMBER VALUES

WEST STRUCTURE ← | → EAST STRUCTURE

LOCATION	GDR. 1	GDR. 2	GDR. 3	GDR. 4	GDR. 5	GDR. 6	GDR. 7	GDR. 8	GDR. 9	GDR. 10	GDR. 11	GDR. 12	GDR. 13	GDR. 14
"A" at 1st Quarter Pt.	2 1/2"	2 1/2"	2 1/2"	2 1/2"	2 1/2"	2 1/2"	3"	3"	3"	3"	3"	3"	3"	3"
"B" at 2nd Quarter Pt.	3 1/4"	3 1/4"	3 1/4"	3 1/4"	3 1/4"	3 1/4"	3 3/4"	3 3/4"	3 3/4"	3 3/4"	3 3/4"	3 3/4"	3 3/4"	3 3/4"
"C" at 3rd Quarter Pt.	3"	3"	3"	3"	3"	3"	3 5/8"	3 5/8"	3 5/8"	3 5/8"	3 5/8"	3 5/8"	3 5/8"	3 5/8"
"D" at 1st Quarter Pt.	2 1/8"	2 1/8"	2 1/8"	2 1/8"	2 1/8"	2 1/8"	2 1/8"	2 1/8"	2 1/8"	2 1/8"	2 1/8"	2 1/8"	2 1/8"	2 1/8"
"E" at 2nd Quarter Pt.	2 1/4"	2 1/4"	2 1/4"	2 1/4"	2 1/4"	2 1/4"	2"	2"	2"	2"	2"	2"	2"	2"
"F" at 3rd Quarter Pt.	1 1/2"	1 1/2"	1 1/2"	1 1/2"	1 1/2"	1 1/2"	1 1/8"	1 1/8"	1 1/8"	1 1/8"	1 1/8"	1 1/8"	1 1/8"	1 1/8"

Camber for concrete deck slab and steel dead load only

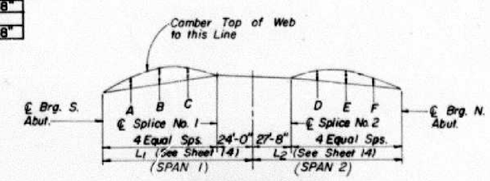

CAMBER DIAGRAM
(See table for values)

NOTES TO FABRICATOR:

See sheet 14 for framing details.
See sheet 14 for individual girder lengths.
Girders 1 thru 6 are parallel to each other.
Girders 7 thru 14 are skewed to each other.
* * * Diaphragms D located between 7 & 8 are perpendicular to 7, diaphragms located between 8 & 9 are perpendicular to 8, etc.
Diaphragms D_2 are skewed to girders, Diag. D_1 are perpendicular to ℄ Roadway.

DESIGNED	L.L. VIELEY
CHECKED	D.L.M.
DRAWN	C.D. SNEDDEN
CHECKED	L.L.V.

DECK FRAMING PLAN

F.A.I. 74 & F.A.U. 6729
SECTION (90-15-1, 15-1HB, 15W)-1
TAZEWELL COUNTY
STATION 36+49.87

FOR INFORMATION ONLY

benesch
engineers · scientists · planners
Alfred Benesch & Company
205 North Michigan Avenue, Suite 2400
Chicago, Illinois 60601
312-565-0450 Job No. 10056

FILE NAME = 0900141_68620_25_existll.dgn	USER NAME = mbecker	DESIGNED - JDC	REVISED -	STATE OF ILLINOIS DEPARTMENT OF TRANSPORTATION	EXISTING PLANS STRUCTURE NO. 090-0141	F.A.I. RTE.	SECTION	COUNTY	TOTAL SHEETS	SHEET NO.
		CHECKED - MRB	REVISED -			74	90-(14R;(14HB-4,14,14HVB)BR)	TAZEWELL	2433	2064
	PLOT SCALE =	DRAWN - PRT	REVISED -					CONTRACT NO. 68620		
	PLOT DATE = 7/16/2012	CHECKED - MRB	REVISED -		SHEET NO. SD25 OF SD29 SHEETS			ILLINOIS FED. AID PROJECT		

7:38:21 AM X:\10000S\10056\Engineering_Documents_Phase_II\MortonOver174\Final\0900141_68620_25_existll.dgn 7/16/2012

STATE OF ILLINOIS
DEPARTMENT OF TRANSPORTATION

RTE.	SECTION	COUNTY	TOTAL SHEETS	SHEET NO.
FAI 74	*	TAZEWELL	280	44A
STA.		TO STA.		
F.H.W.A. REG.		ILLINOIS		

*(90-15-1,15-1 HB,15 W)-1

SHEET 14 OF 22

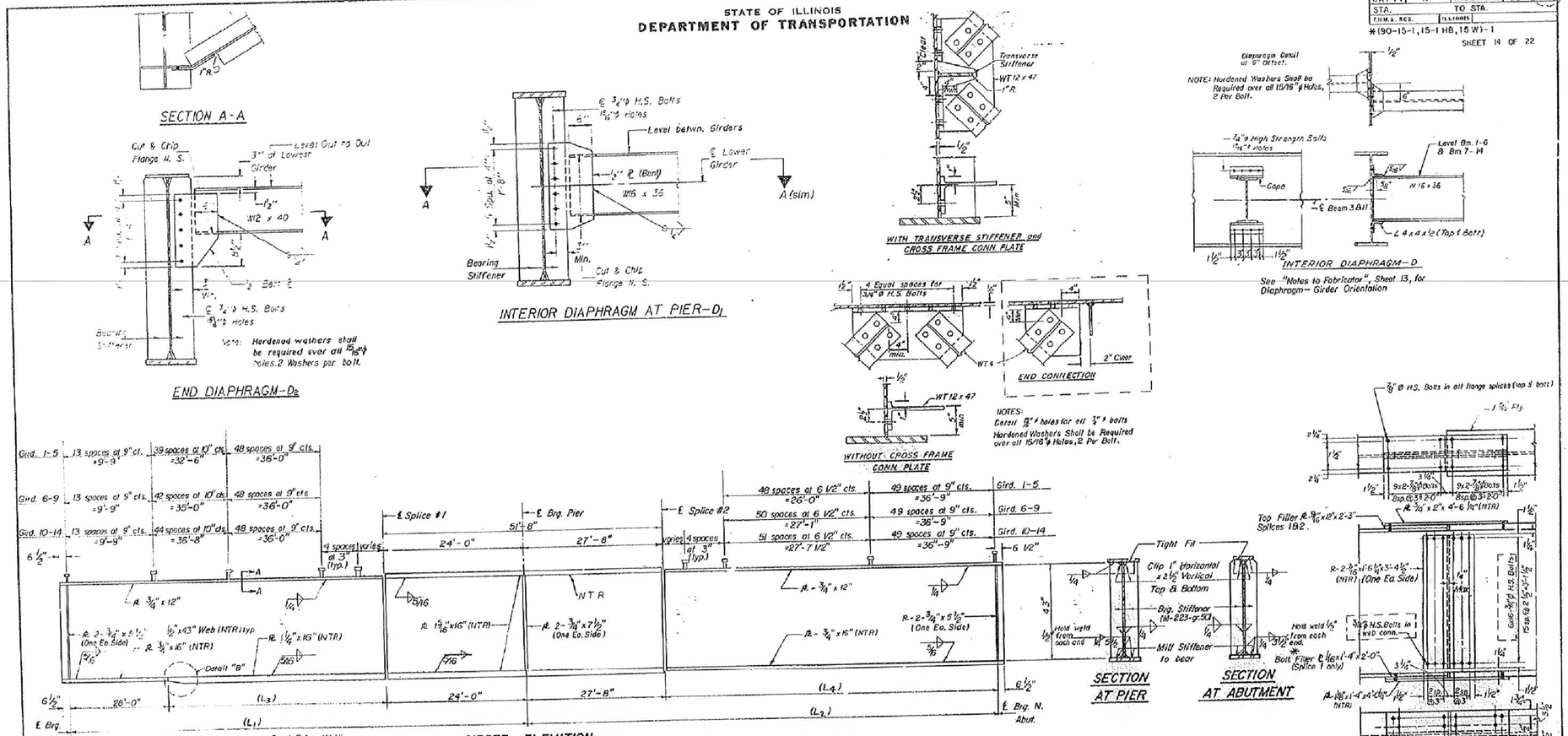

Girder No.	Span Length (L_1)	Span Length (L_2)	Length (L_3)	Length (L_4)
No. 1	106'-6 3/4"	94'-11 3/4"	54'-8 3/4"	67'-3 3/16"
No. 2	107'-0 1/16"	95'-1 3/4"	55'-0 1/16"	67'-5 3/4"
No. 3	107'-5 3/16"	95'-3 3/4"	55'-5 5/16"	67'-7 3/4"
No. 4	107'-10 9/16"	95'-5 11/16"	55'-10 9/16"	67'-9 11/16"
No. 5	108'-3 13/16"	95'-7 11/16"	56'-3 13/16"	67'-11 11/16"
No. 6	108'-9 1/16"	95'-9 11/16"	56'-9 1/16"	68'-1 11/16"
No. 7	109'-0 1/2"	95'-11"	57'-0 1/2"	68'-3"
No. 8	109'-5 7/8"	96'-0 15/16"	57'-5 7/8"	68'-4 15/16"
No. 9	109'-11 1/4"	96'-2 13/16"	57'-11 1/4"	68'-6 13/16"
No. 10	110'-4 1/2"	96'-5"	58'-4 1/2"	68'-9"
No. 11	110'-9 7/8"	96'-7"	58'-9 7/8"	68'-11"
No. 12	111'-3 1/4"	96'-9 1/16"	59'-3 1/4"	69'-1 1/16"
No. 13	111'-8 5/8"	96'-11 1/16"	59'-8 5/8"	69'-3 1/16"
No. 14	112'-2 1/16"	97'-1 1/8"	60'-2 1/16"	69'-5 1/8"

FOR INFORMATION ONLY

benesch
engineers · scientists · planners
Alfred Benesch & Company
205 North Michigan Avenue, Suite 2400
Chicago, Illinois 60601
312-565-0450 Job No. 10056

FILE NAME =	USER NAME = mbecker	DESIGNED - JDC	REVISED -	STATE OF ILLINOIS DEPARTMENT OF TRANSPORTATION	EXISTING PLANS STRUCTURE NO. 090-0141	F.A.I. RTE.	SECTION	COUNTY	TOTAL SHEETS	SHEET NO.
		CHECKED - MRB	REVISED -			74	90-(14R;(14HB-4,14,14HVB)BR)	TAZEWELL	2433	2065
0900141_68620_26_existl2.dgn	PLOT SCALE =	DRAWN - PRT	REVISED -					CONTRACT NO. 68620		
	PLOT DATE = 7/16/2012	CHECKED - MRB	REVISED -		SHEET NO. SD26 OF SD29 SHEETS		ILLINOIS	FED. AID PROJECT		

X:\10000S\10056\Engineering_Documents_Phase_II\MortonOver174\Final\0900141_68620_26_existl2.dgn 7:38:32 AM 7/16/2012

RTE	SECTION	COUNTY	TOTAL SHEETS	SHEET NO.
FAI 74	*	TAZEWELL	2 DO	45
STA.		TO STA.		
F.H.W.A. REG.		ILLINOIS		

* (90-15-1,15-1HB,15 W)-1

SHEET 15 OF 22

STATE OF ILLINOIS
DEPARTMENT OF TRANSPORTATION

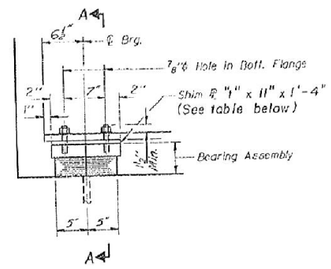

ELEVATION AT ABUT.

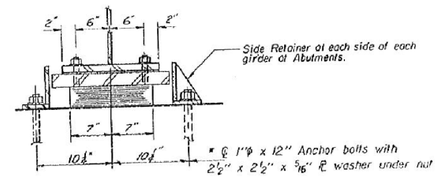

SECTION A-A

TYPE I ELASTOMERIC EXP. BRG.

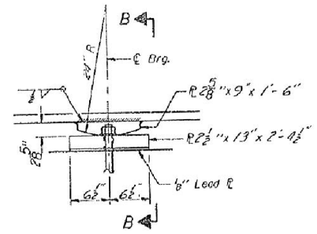

ELEVATION AT PIER

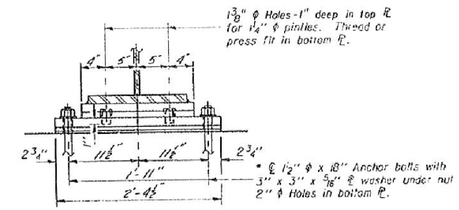

SECTION B-B

FIXED BEARING
(14 Required)

* Notes: Anchor bolts at fixed bearings may be built into the masonry.
See sheet #16 for Anchor Bolt Installation.

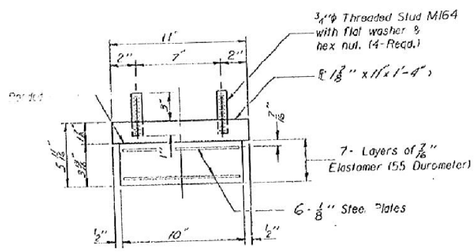

BEARING ASSEMBLY

Note: Shim plates shall not be placed under Bearing Assembly.

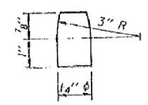

PINTLE

TABLE OF "t" DIMENSIONS

GIRDER NO.	1	2	3	4	5	6	7	8	9	10	11	12	13	14
S. Abut.	–	–	–	–	–	0⅛"	–	–	–	–	–	–	–	–
Pier	–	–	–	–	–	–	–	–	–	–	–	–	–	–
N. Abut.	–	–	–	–	–	–	–	–	–	–	–	–	–	–

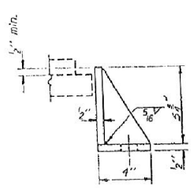

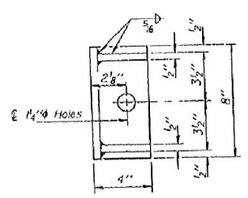

SIDE RETAINER

Equivalent rolled angle with stiffeners will be allowed in lieu of welded plates.
(56 Required)

BILL OF MATERIAL

Item	Unit	Total
Elastomeric Bearing Assembly Type 1	Each	28

DESIGNED	L.L. VIFLEY
CHECKED	D.L.M.
DRAWN	C.D. SNEDDEN
CHECKED	L.L.V.

I-2-51 12-1-83

R.A.N. CONSULTANTS INC.

BEARING DETAILS

F.A.I. 74 & F.A.U. 6729
SECTION (90-15-1,15-1HB,15W)-1
TAZEWELL COUNTY
STATION 36+49.87

FAI 74 (I-74) / FAU 6729 (MORTON AVE.)

88310

FOR INFORMATION ONLY

benesch
engineers · scientists · planners

Alfred Benesch & Company
205 North Michigan Avenue, Suite 2400
Chicago, Illinois 60601
312-565-0450 Job No. 10056

FILE NAME = 0900141_68620_27_existl3.dgn	USER NAME = mbecker	DESIGNED - JDC	REVISED -
		CHECKED - MRB	REVISED -
	PLOT SCALE =	DRAWN - PRT	REVISED -
	PLOT DATE = 7/16/2012	CHECKED - MRB	REVISED -

STATE OF ILLINOIS
DEPARTMENT OF TRANSPORTATION

EXISTING PLANS
STRUCTURE NO. 090-0141
SHEET NO. SD27 OF SD29 SHEETS

F.A.I. RTE.	SECTION	COUNTY	TOTAL SHEETS	SHEET NO.
74	90-(14R;(14HB-4,14,14HVB)BR)	TAZEWELL	2433	2066
		CONTRACT NO. 68620		
	ILLINOIS	FED. AID PROJECT		

X:\100005\10056\Engineering_Documents_Phase_II\MortonOver174\Final\0900141_68620_27_existl3.dgn 7:38:43 AM 7/16/2012

RTE.	SECTION	COUNTY	TOTAL SHEETS	SHEET NO.
FAI 74	*	TAZEWELL	280	89
STA.		TO STA.		
F.H.W.A. REG.		ILLINOIS		

* (90-15-1,15-1HB,15 W)-1

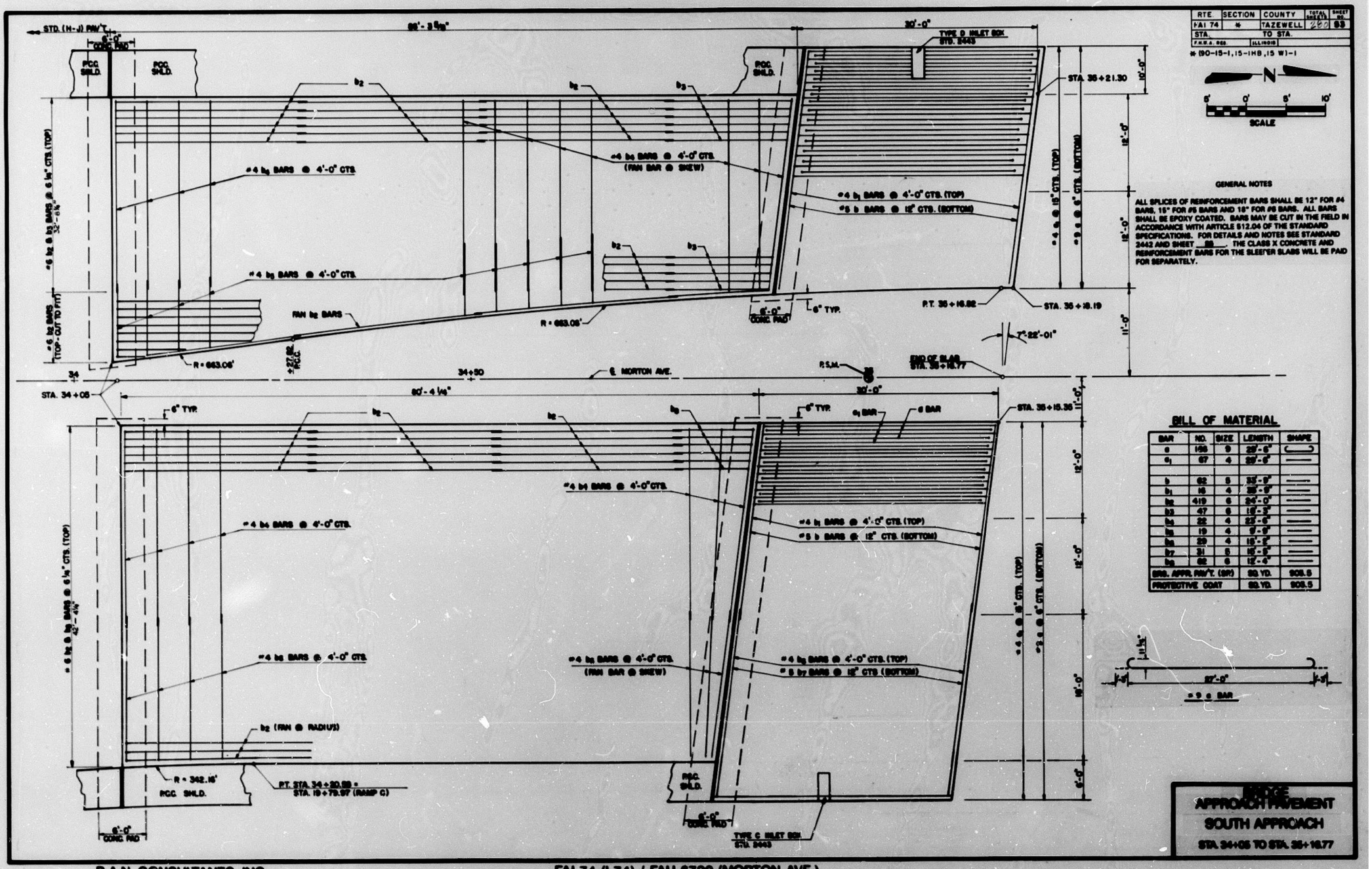

GENERAL NOTES

ALL SPLICES OF REINFORCEMENT BARS SHALL BE 12" FOR #4 BARS, 15" FOR #5 BARS AND 18" FOR #6 BARS. ALL BARS SHALL BE EPOXY COATED. BARS MAY BE CUT IN THE FIELD IN ACCORDANCE WITH ARTICLE 512.04 OF THE STANDARD SPECIFICATIONS. FOR DETAILS AND NOTES SEE STANDARD 2442 AND SHEET __88__. THE CLASS X CONCRETE AND REINFORCEMENT BARS FOR THE SLEEPER SLABS WILL BE PAID FOR SEPARATELY.

BILL OF MATERIAL

BAR	NO.	SIZE	LENGTH	SHAPE
a	196	9	28'-6"	
a_1	67	4	28'-6"	
b	62	5	33'-9"	
b_1	16	4	28'-6"	
b_2	419	6	34'-0"	
b_3	47	6	18'-3"	
b_4	22	4	23'-6"	
b_5	19	4	9'-9"	
b_6	29	4	15'-5"	
b_7	31	5	15'-5"	
b_8	62	5	12'-4"	
BRG. APPR. PAV'T. (SF)			SQ. YD.	903.5
PROTECTIVE COAT			SQ. YD.	903.5

R.A.N. CONSULTANTS, INC.

FAI 74 (I-74) / FAU 6729 (MORTON AVE.)

FOR INFORMATION ONLY

benesch
engineers · scientists · planners
Alfred Benesch & Company
205 North Michigan Avenue, Suite 2400
Chicago, Illinois 60601
312-565-0450 Job No. 10056

FILE NAME = 0900141_68620_28_existl4.dgn	USER NAME = mbecker	DESIGNED - JDC	REVISED -
		CHECKED - MRB	REVISED -
	PLOT SCALE =	DRAWN - PRT	REVISED -
	PLOT DATE = 7/16/2012	CHECKED - MRB	REVISED -

STATE OF ILLINOIS
DEPARTMENT OF TRANSPORTATION

EXISTING PLANS
STRUCTURE NO. 090-0141

SHEET NO. SD28 OF SD29 SHEETS

F.A.I. RTE.	SECTION	COUNTY	TOTAL SHEETS	SHEET NO.
74	90-[14R;(14HB-4,14,14HVB)BR]	TAZEWELL	2433	2067
		CONTRACT NO. 68620		
		ILLINOIS FED. AID PROJECT		

7/16/2012 7:38:55 AM X:\10000S\10056\Engineering_Documents_Phase_II\MortonOver174\Final\0900141_68620_28_existl4.dgn

RTE.	SECTION	COUNTY	TOTAL SHEETS	SHEET NO.
FAI 74	*	TAZEWELL	280	54
STA.		TO STA.		
F.A.I.\S. REG.		ILLINOIS		

* (90-15-1,15-1HB,15 W1-1)

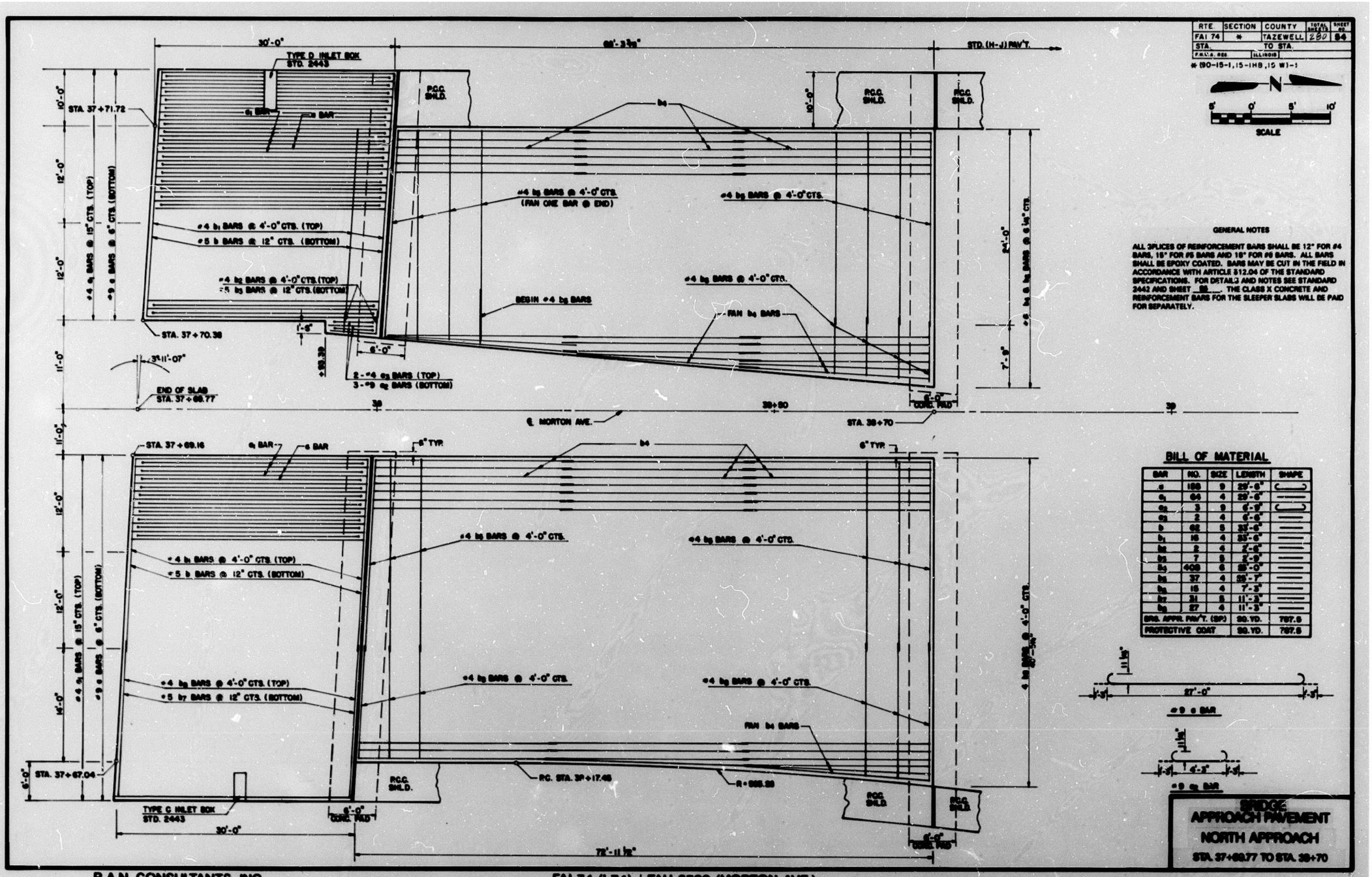

GENERAL NOTES

ALL SPLICES OF REINFORCEMENT BARS SHALL BE 12" FOR #4 BARS, 15" FOR #5 BARS AND 18" FOR #6 BARS. ALL BARS SHALL BE EPOXY COATED. BARS MAY BE CUT IN THE FIELD IN ACCORDANCE WITH ARTICLE 512.04 OF THE STANDARD SPECIFICATIONS. FOR DETAILS AND NOTES SEE STANDARD 2442 AND SHEET 53. THE CLASS X CONCRETE AND REINFORCEMENT BARS FOR THE SLEEPER SLABS WILL BE PAID FOR SEPARATELY.

BILL OF MATERIAL

BAR	NO.	SIZE	LENGTH	SHAPE
a	198	9	29'-6"	
a1	64	4	29'-6"	
a2	3	9	6'-9"	
a3	2	4	6'-6"	
b	66	5	33'-6"	
b1	16	4	33'-6"	
b2	2	4	2'-6"	
b3	7	5	2'-9"	
b4	408	6	25'-0"	
b5	37	4	25'-7"	
b6	15	4	7'-3"	
b7	31	5	11'-3"	
b8	27	4	11'-3"	
BRS. APPR. PAV'T. (SP)			SQ. YD.	797.5
PROTECTIVE COAT			SQ. YD.	797.5

BRIDGE APPROACH PAVEMENT
NORTH APPROACH
STA. 37+69.77 TO STA. 38+70

R.A.N. CONSULTANTS, INC.

FAI 74 (I-74) / FAU 6729 (MORTON AVE.)

FOR INFORMATION ONLY

benesch
engineers · scientists · planners
Alfred Benesch & Company
205 North Michigan Avenue, Suite 2400
Chicago, Illinois 60601
312-565-0450 Job No. 10056

FILE NAME = 0900141_68620_29_exist15.dgn	USER NAME = mbecker	DESIGNED - JDC	REVISED -
		CHECKED - MRB	REVISED -
	PLOT SCALE =	DRAWN - PRT	REVISED -
	PLOT DATE = 7/16/2012	CHECKED - MRB	REVISED -

STATE OF ILLINOIS
DEPARTMENT OF TRANSPORTATION

EXISTING PLANS
STRUCTURE NO. 090-0141
SHEET NO. SD29 OF SD29 SHEETS

F.A.I. RTE.	SECTION	COUNTY	TOTAL SHEETS	SHEET NO.
74	90-(14R;(14HB-4,14,14HVB)BR)	TAZEWELL	2433	2068
		CONTRACT NO. 68620		
	ILLINOIS	FED. AID PROJECT		

X:\100005\10056\Engineering_Documents_Phase_II\MortonOver174\Final\0900141_68620_29_exist15.dgn 7:39:15 AM 7/16/2012

GENERAL NOTES:

1. Plan dimensions and details relative to existing plans are subject to nominal construction variations. The contractor shall field verify existing dimensions and details affecting new construction and make necessary approved adjustments prior to construction or ordering of materials. Such variations shall not be cause for additional compensation for a change in scope of the work, however, the Contractor will be paid for the quantity actually furnished at the unit price bid for the work.

2. The existing structural steel coating contains lead. The Contractor shall take appropriate precautions to deal with the presence of lead on this project.

3. Remove existing piers, abutments, wingwalls and foundations to 5′ below proposed grade within outside edges of proposed I-74 and Ramp E shoulders, and to 2′ below proposed ground elsewhere. No temporary retention system is included in the plans for removal below grade of the existing creosoted timber piles under the approach slabs. These piles may be extracted or cut off by use of localized excavations. The piles adjacent to the stage construction line will require extraction. Cost included with the cost of Removal of Existing Structures No. 6 and No. 7. If pile deterioration is such that extraction becomes infeasible by determination of the Engineer, then localized earth retention with excavation and pile cutoff will be paid for according to Article 109.04 of the Standard Specifications.

4. During Stage 1 Construction, remove existing Piers to below the limits of the Geotextile Retaining Wall.

5. Settlement platforms shall be utilized at the embankments for the proposed pavement to monitor rate of settlement. See Roadway plans and Special Provisions for more information.

INDEX OF SHEETS

SR1	General Plan and Elevation
SR2	General Data
SR3	Stage Removal Details 1 of 5
SR4	Stage Removal Details 2 of 5
SR5	Stage Removal Details 3 of 5
SR6	Stage Removal Details 4 of 5
SR7	Stage Removal Details 5 of 5
SR8	Temporary Sheeting Details
SR9	Temporary Geotextile Wall Details 1 of 2
SR10	Temporary Geotextile Wall Details 2 of 2
SR11	Temporary Concrete Barrier for Stage Construction
SR12	Existing Plans 1 of 11
SR13	Existing Plans 2 of 11
SR14	Existing Plans 3 of 11
SR15	Existing Plans 4 of 11
SR16	Existing Plans 5 of 11
SR17	Existing Plans 6 of 11
SR18	Existing Plans 7 of 11
SR19	Existing Plans 8 of 11
SR20	Existing Plans 9 of 11
SR21	Existing Plans 10 of 11
SR22	Existing Plans 11 of 11

TOTAL BILL OF MATERIAL

ITEM	UNIT	TOTAL
Porous Granular Embankment	Cu. Yd.	1,544
Removal of Existing Structures No. 6	Each	1
Removal of Existing Structures No. 7	Each	1
Structure Excavation	Cu. Yd.	474
Temporary Sheet Piling	Sq. Ft.	2,785
Geotextile Retaining Wall	Sq. Ft.	4,144
Lightweight Cellular Concrete Fill	Cu. Yd.	474

benesch
engineers · scientists · planners
Alfred Benesch & Company
205 North Michigan Avenue, Suite 2400
Chicago, Illinois 60601
312-565-0450 Job No. 10056

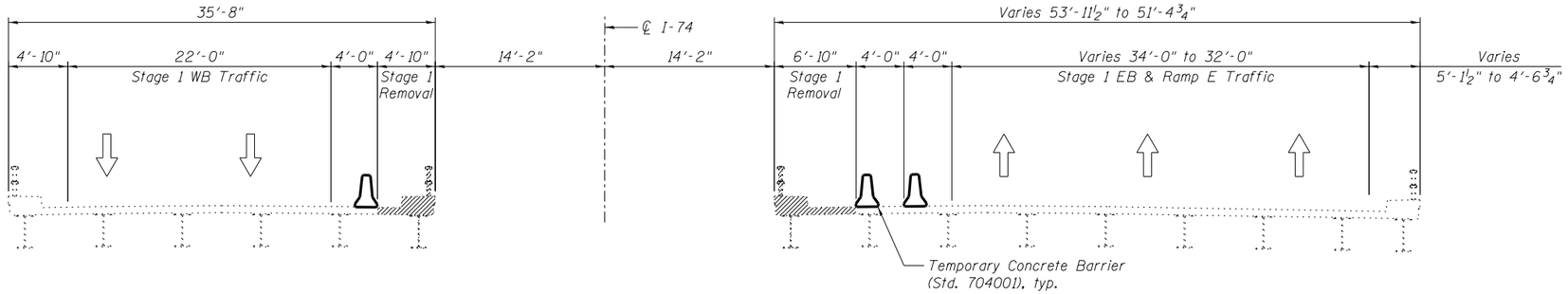

STAGE 1 REMOVAL
(Looking Upstation)

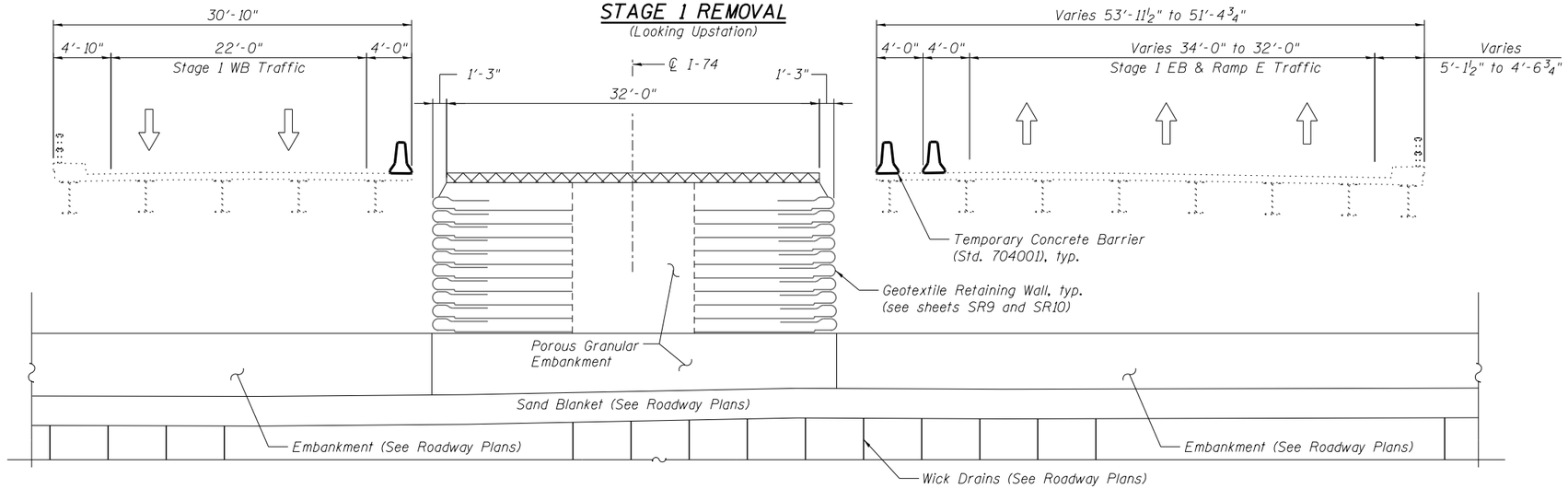

STAGE 1 CONSTRUCTION
(Looking Upstation)

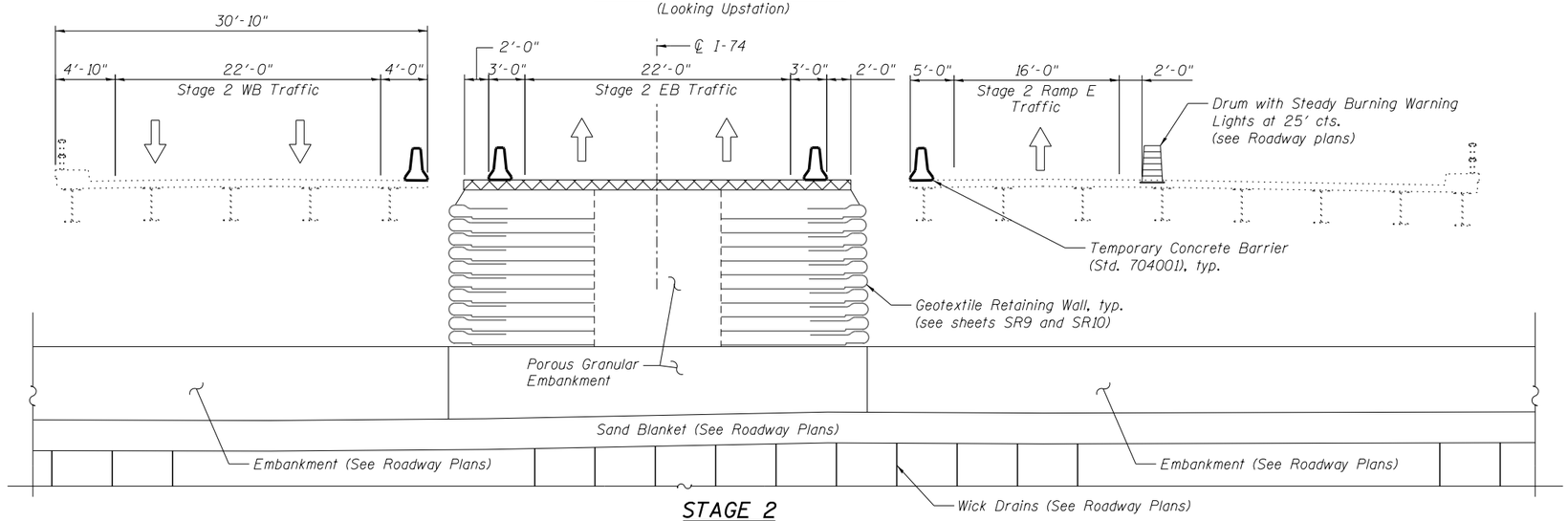

STAGE 2
(Looking Upstation)

STAGE 1 REMOVAL
1) Remove approximately 4'-10" of the existing WB bridge
2) Remove approximately 6'-10" of the existing EB bridge

STAGE 1 CONSTRUCTION
1) Existing ground in vicinity of existing piers shall be excavated for Lightweight Cellular Concrete Fill as shown on sheet SR10.
2) Lightweight Cellular Concrete Fill shall be placed to the elevation of existing ground.
3) A free draining sand blanket layer shall be placed on the existing ground beneath both existing WB and EB structures.
4) Wick Drains shall be installed to facilitate consolidation (see Roadway plans).
5) Embankment shall be placed and compacted beneath the existing WB and EB structures so that the top of embankment is located 10'-0" from bottom of existing girders.
6) Settlement Platforms shall be installed to monitor consolidation (see Roadway plans).
7) Geotextile Retaining Wall shall be installed at the locations and to the limits shown on sheet SR9.
8) Porous Granular Embankment shall be placed between the Geotextile Retaining Walls.
9) Temporary Pavement shall be installed above the Geotextile Retaining Walls

STAGE 1 TRAFFIC
WB I-74 traffic on existing WB bridge
EB I-74 traffic and Ramp E traffic on existing EB bridge

STAGE 2 TRAFFIC
WB I-74 traffic on existing WB bridge
EB I-74 traffic on temporary pavement
Ramp E traffic on existing EB bridge

LEGEND:
Indicates temporary pavement
Indicates removal

NOTE:
See Maintenance of Traffic plans for more information.

benesch
engineers · scientists · planners
Alfred Benesch & Company
205 North Michigan Avenue, Suite 2400
Chicago, Illinois 60601
312-565-0450 Job No. 10056

FILE NAME = xxxxxxx_68620_03_stgl.dgn	USER NAME = mbecker	DESIGNED - MFB	REVISED -
		CHECKED - KWS	REVISED -
	PLOT SCALE =	DRAWN - MFB/DTS	REVISED -
	PLOT DATE = 7/16/2012	CHECKED - KWS	REVISED -

STATE OF ILLINOIS
DEPARTMENT OF TRANSPORTATION

STAGE REMOVAL DETAILS 1 OF 5
STRUCTURE NO. 090-0014 / 0015 REMOVAL
SHEET NO. SR3 OF SR22 SHEETS

F.A.I. RTE.	SECTION	COUNTY	TOTAL SHEETS	SHEET NO.
74	90-(14R;(14HB-4,14,14HVB)BR)	TAZEWELL	2433	2071
		CONTRACT NO. 68620		
	ILLINOIS FED. AID PROJECT			

7/16/2012 7:44:37 AM X:\100005\10056\Engineering_Documents_Phase_II\I74overRR\Final\xxxxxxx_68620_03_stgl.dgn

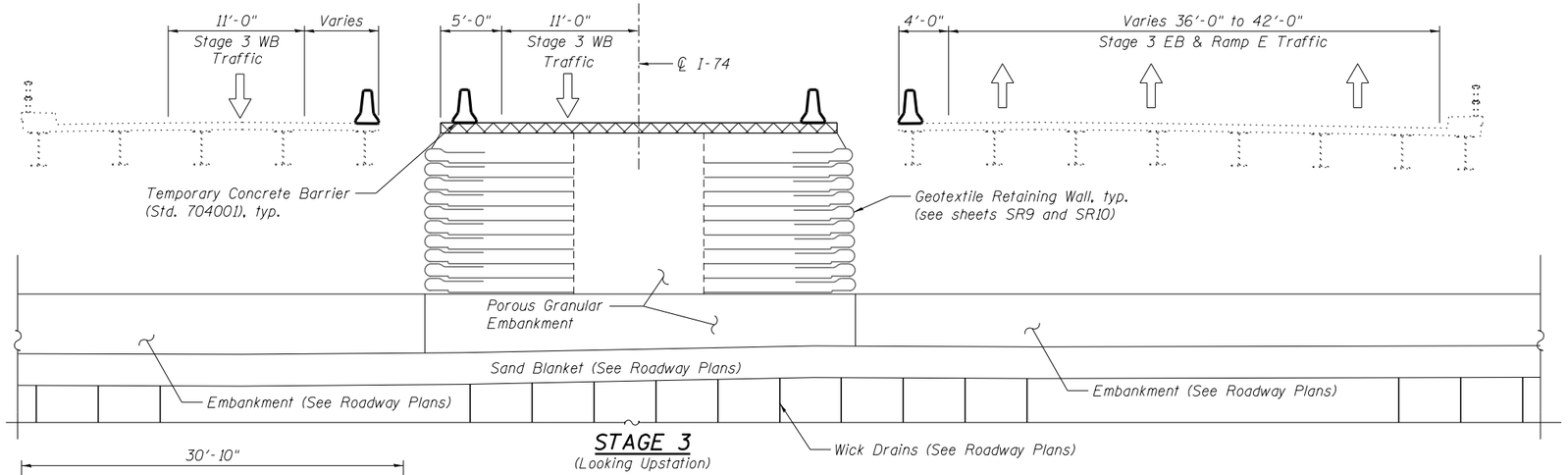

STAGE 3
(Looking Upstation)

STAGE 3 TRAFFIC
WB I-74 traffic on existing WB bridge and temporary pavement
EB I-74 traffic and Ramp E traffic on existing EB bridge

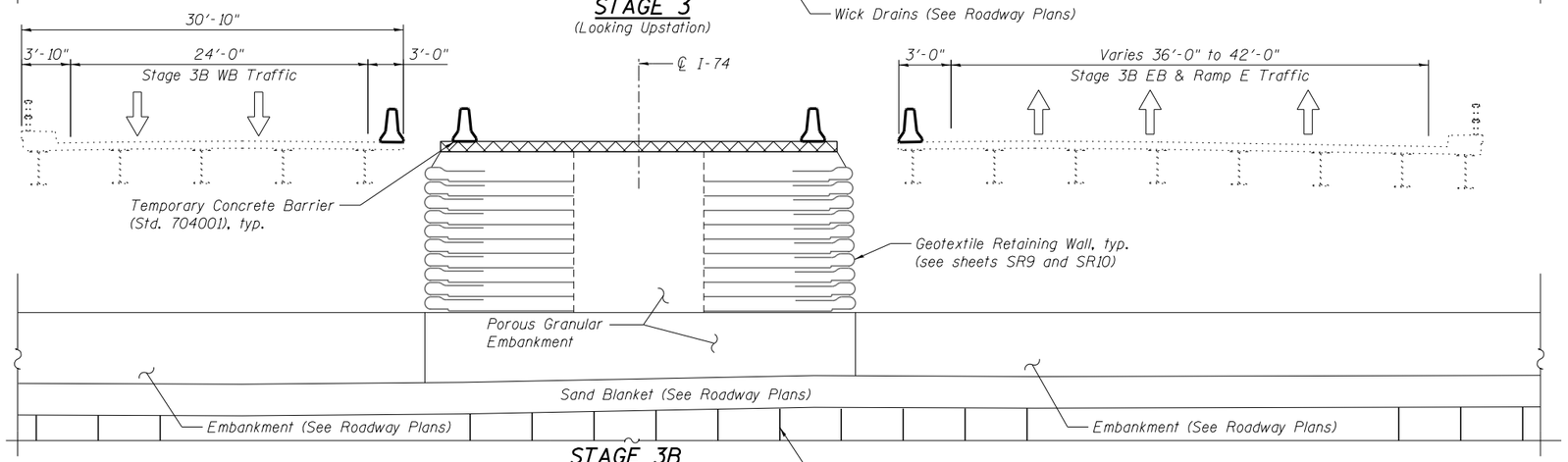

STAGE 3B
(Looking Upstation)

STAGE 3B TRAFFIC
WB I-74 traffic on existing WB bridge
EB I-74 traffic and Ramp E traffic on existing EB bridge

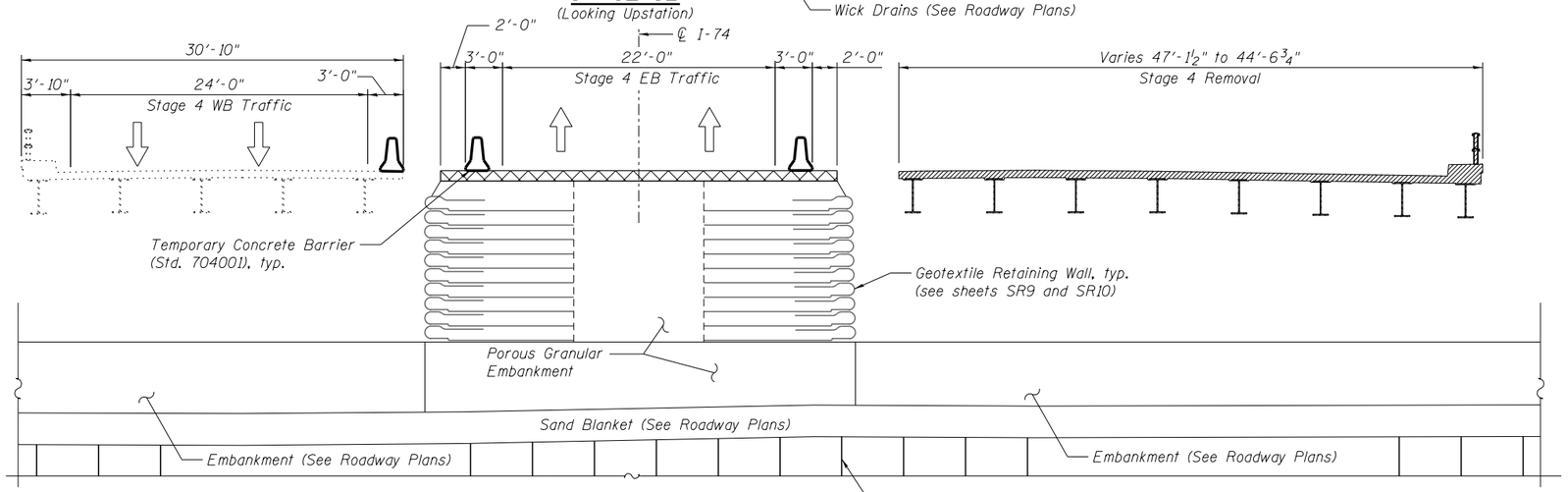

STAGE 4 REMOVAL
(Looking Upstation)

STAGE 4 REMOVAL
1) Remove remainder of existing EB bridge.

STAGE 4 TRAFFIC
WB I-74 traffic on existing WB bridge
EB I-74 traffic on temporary pavement
Ramp E traffic detoured

LEGEND:

Indicates temporary pavement

Indicates removal

NOTE:

See Maintenance of Traffic plans for more information.

benesch
engineers · scientists · planners
Alfred Benesch & Company
205 North Michigan Avenue, Suite 2400
Chicago, Illinois 60601
312-565-0450 Job No. 10056

FILE NAME = xxxxxxx_68620_04_stg2.dgn	USER NAME = mbecker	DESIGNED - MFB	REVISED -
		CHECKED - KWS	REVISED -
	PLOT SCALE =	DRAWN - MFB/DTS	REVISED -
	PLOT DATE = 8/20/2012	CHECKED - KWS	REVISED -

STATE OF ILLINOIS
DEPARTMENT OF TRANSPORTATION

STAGE REMOVAL DETAILS 2 OF 5
STRUCTURE NO. 090-0014 / 0015 REMOVAL
SHEET NO. SR4 OF SR22 SHEETS

F.A.I. RTE.	SECTION	COUNTY	TOTAL SHEETS	SHEET NO.
74	90-(14R;14HB-4,14,14HVB)BR)	TAZEWELL	2433	2072
		CONTRACT NO. 68620		
	ILLINOIS FED. AID PROJECT			

X:\100005\10056\Engineering_Documents_Phase_II\I74overRR\Final\xxxxxxx_68620_04_stg2.dgn 10:13:23 AM 8/20/2012

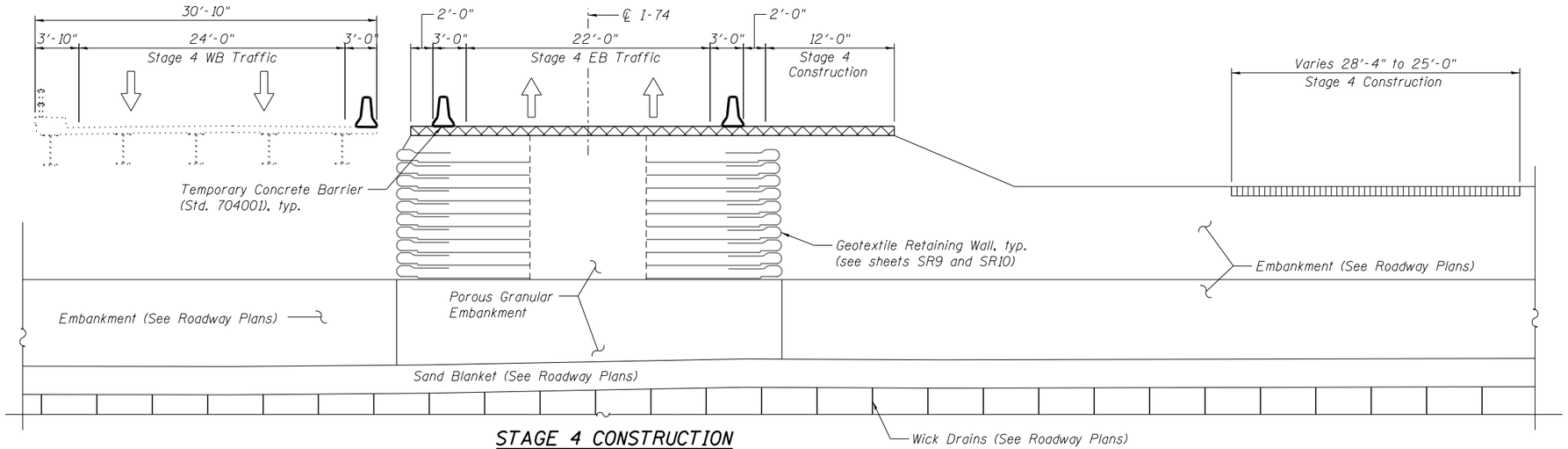

STAGE 4 CONSTRUCTION

(Looking Upstation)

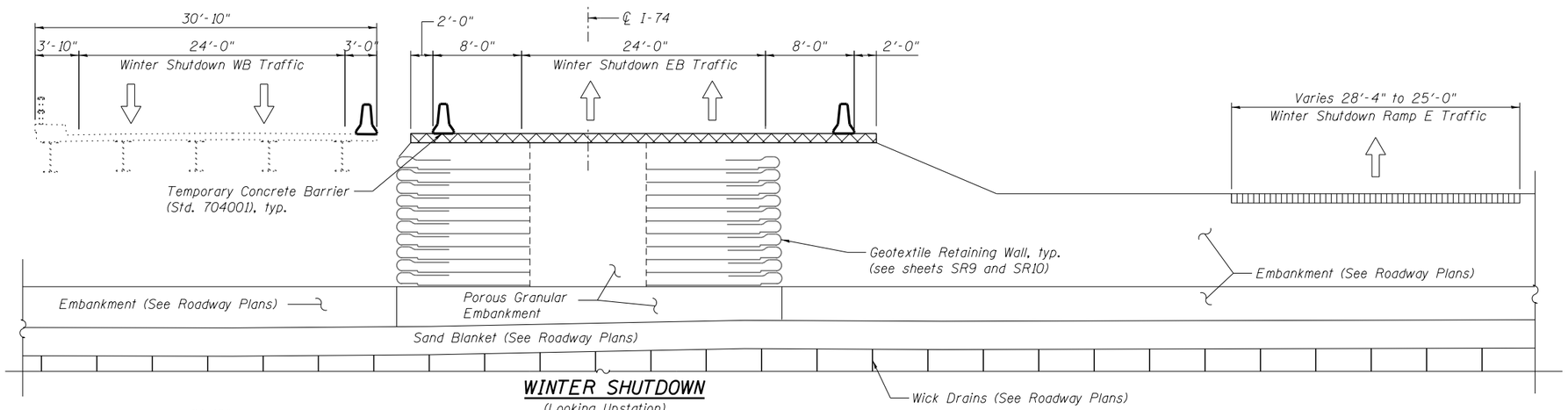

WINTER SHUTDOWN

(Looking Upstation)

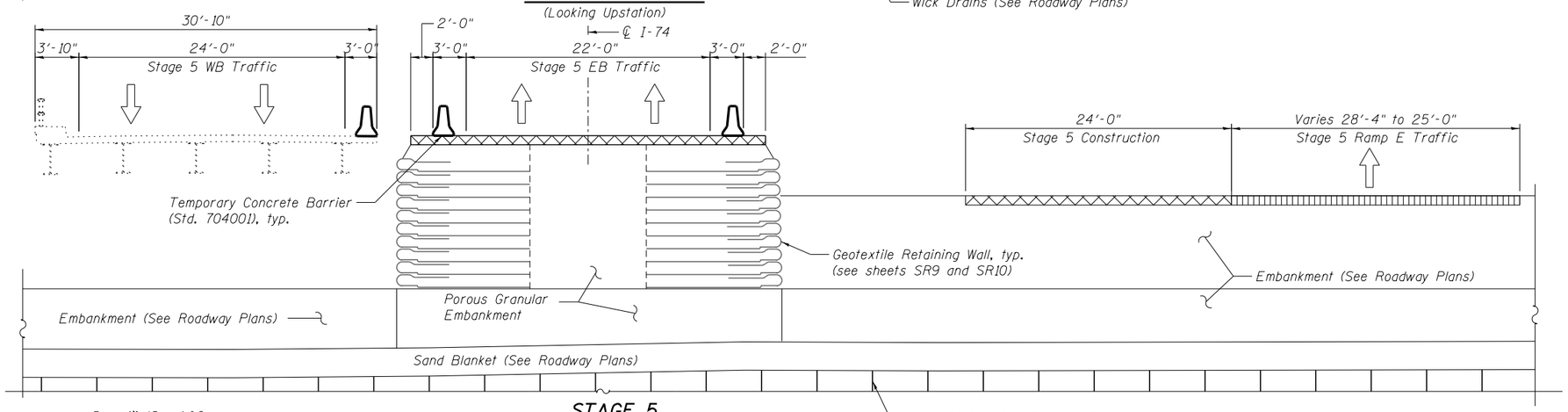

STAGE 5

(Looking Upstation)

STAGE 4 CONSTRUCTION

1) Ramp E proposed pavement constructed.
2) Temporary embankment added to the south of temporary pavement constructed in Stage 1.

STAGE 4 TRAFFIC

WB I-74 traffic on existing WB bridge
EB I-74 traffic on temporary pavement
Ramp E traffic detoured

WINTER SHUTDOWN TRAFFIC

WB I-74 traffic on existing WB bridge
EB I-74 traffic on temporary pavement
Ramp E traffic on proposed Ramp E pavement

STAGE 5 CONSTRUCTION

1) Construct 24' of temporary pavement adjacent to proposed Ramp E pavement

STAGE 5 TRAFFIC

WB I-74 traffic on existing WB bridge
EB I-74 traffic on temporary pavement
Ramp E traffic on proposed Ramp E pavement

LEGEND:

Indicates temporary pavement

Indicates proposed pavement

NOTE:

See Maintenance of Traffic plans for more information.

benesch
engineers · scientists · planners
Alfred Benesch & Company
205 North Michigan Avenue, Suite 2400
Chicago, Illinois 60601
312-565-0450 Job No. 10056

FILE NAME = xxxxxxx_68620_05_stg3.dgn	USER NAME = mbecker	DESIGNED - MFB	REVISED -
		CHECKED - KWS	REVISED -
	PLOT SCALE =	DRAWN - MFB/DTS	REVISED -
	PLOT DATE = 7/16/2012	CHECKED - KWS	REVISED -

STATE OF ILLINOIS
DEPARTMENT OF TRANSPORTATION

STAGE REMOVAL DETAILS 3 OF 5
STRUCTURE NO. 090-0014 / 0015 REMOVAL

SHEET NO. SR5 OF SR22 SHEETS

F.A.I. RTE.	SECTION	COUNTY	TOTAL SHEETS	SHEET NO.
74	90-(14R;(14HB-4,14,14HVB)BR)	TAZEWELL	2433	2073
		CONTRACT NO. 68620		
		ILLINOIS FED. AID PROJECT		

X:\100005\10056\Engineering_Documents_Phase_II\I74overRR\Final\xxxxxxx_68620_05_stg3.dgn 7:44:39 AM 7/16/2012

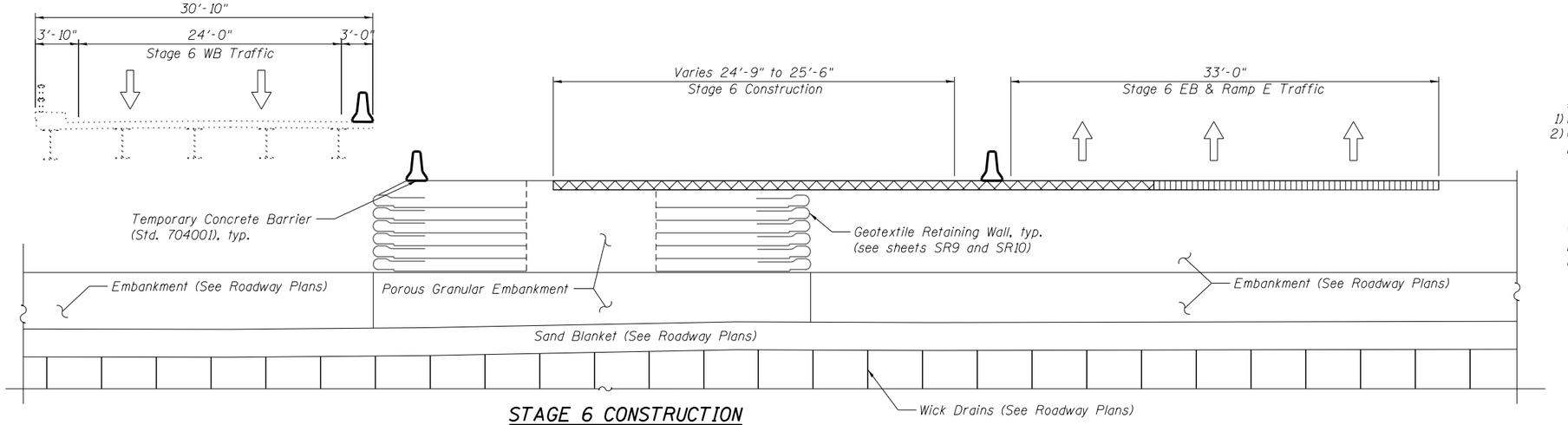

STAGE 6 CONSTRUCTION
(Looking Upstation)

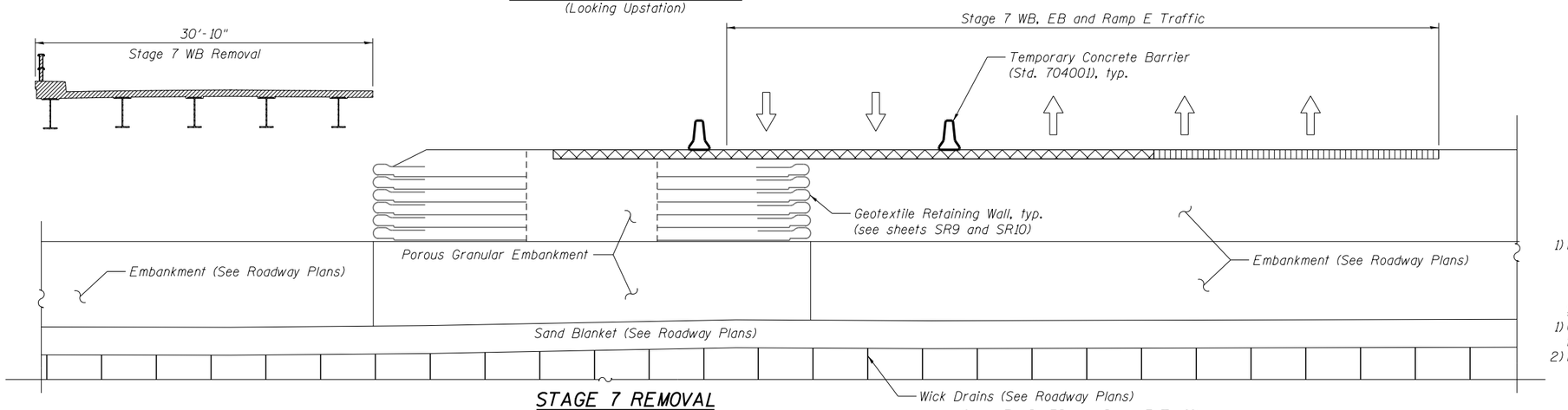

STAGE 7 REMOVAL
(Looking Upstation)

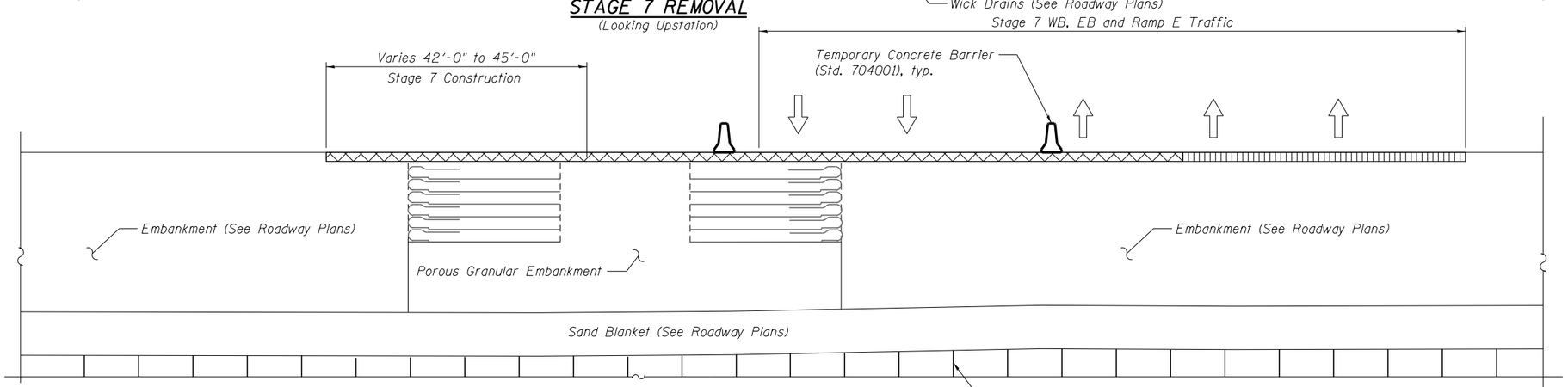

STAGE 7 CONSTRUCTION
(Looking Upstation)

STAGE 6 CONSTRUCTION
1) Remove upper portion of Geotextile Retaining Wall.
2) Construct temporary pavement adjacent to temporary EB I-74 pavement constructed in Stage 5.

STAGE 6 TRAFFIC
WB I-74 traffic on existing WB bridge
EB I-74 traffic on temporary EB I-74 pavement
Ramp E traffic on proposed Ramp E pavement

STAGE 7 REMOVAL
1) Remove remainder of existing WB bridge.

STAGE 7 CONSTRUCTION
1) Construct temporary I-74 pavement adjacent to temporary pavement constructed in Stage 6.
2) Finalize embankment for WB lanes.

STAGE 7 TRAFFIC
WB I-74 traffic on temporary I-74 pavement
EB I-74 traffic on temporary I-74 pavement
Ramp E traffic on proposed Ramp E pavement

LEGEND:
- Indicates temporary pavement
- Indicates proposed pavement
- Indicates removal

NOTES:
1) Remainder of proposed pavement is constructed in Stages 9, 10 and 11.
2) See Maintenance of Traffic plans for more information.

benesch
engineers · scientists · planners
Alfred Benesch & Company
205 North Michigan Avenue, Suite 2400
Chicago, Illinois 60601
312-565-0450 Job No. 10056

FILE NAME = xxxxxxx_68620_06_stg4.dgn	USER NAME = mbecker	DESIGNED - MFB	REVISED -
		CHECKED - KWS	REVISED -
	PLOT SCALE =	DRAWN - MFB/DTS	REVISED -
	PLOT DATE = 8/20/2012	CHECKED - KWS	REVISED -

STATE OF ILLINOIS
DEPARTMENT OF TRANSPORTATION

STAGE REMOVAL DETAILS 4 OF 5
STRUCTURE NO. 090-0014 / 0015 REMOVAL
SHEET NO. SR6 OF SR22 SHEETS

F.A.I. RTE.	SECTION	COUNTY	TOTAL SHEETS	SHEET NO.
74	90-(14R;(14HB-4,14,14HVB)BR)	TAZEWELL	2433	2074
		CONTRACT NO. 68620		
	ILLINOIS FED. AID PROJECT			

X:\100005\10056\Engineering_Documents_Phase_II\I74overRR\Final\xxxxxxx_68620_06_stg4.dgn 10:13:24 AM 8/20/2012

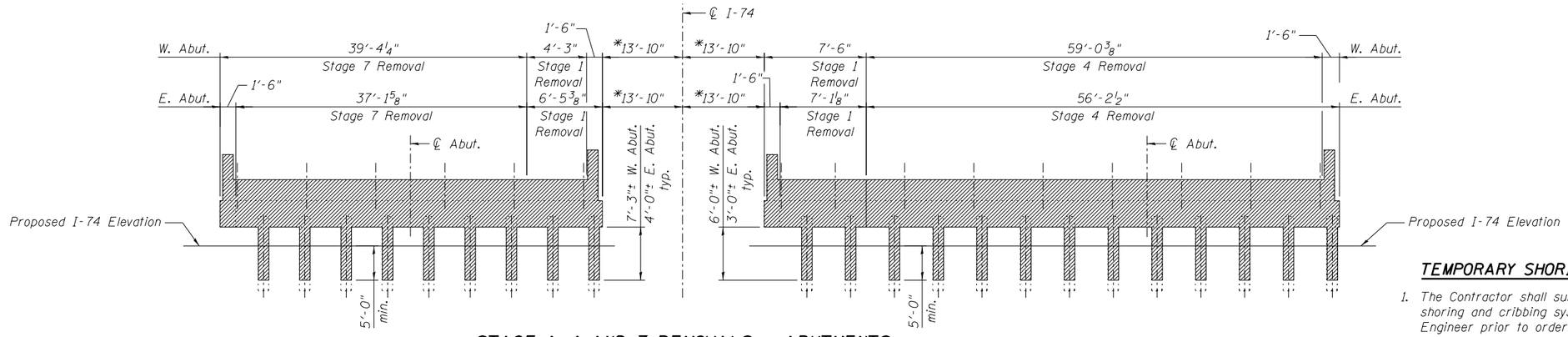

STAGE 1, 4 AND 7 REMOVALS - ABUTMENTS

(Looking at front face of E. Abuts. - W. Abuts. similar)
(Wingwalls and Temporary Sheet Piling not shown for clarity)

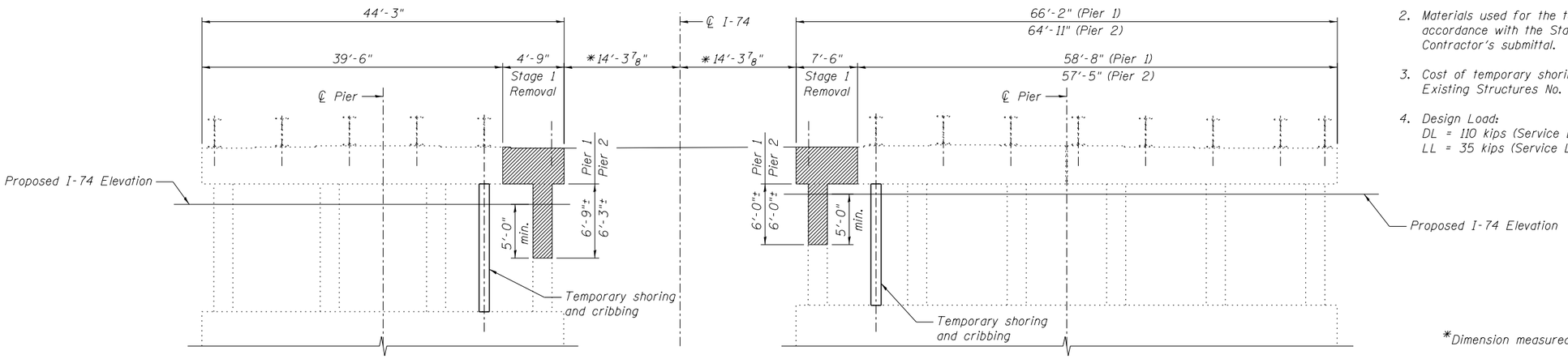

STAGE 1 REMOVAL - PIERS

(Looking Upstation)

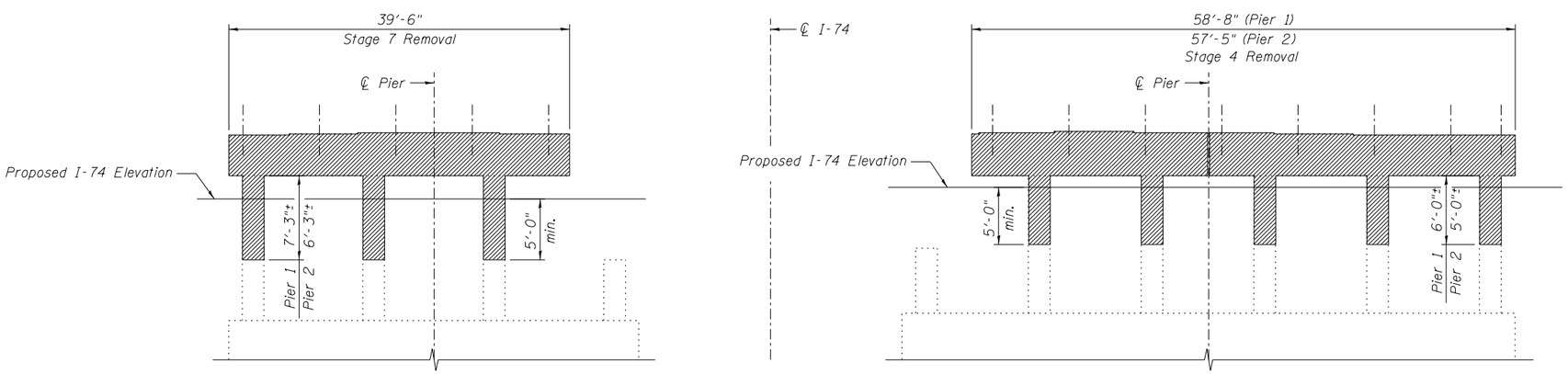

STAGE 4 AND 7 REMOVALS - PIERS

(Looking Upstation)

TEMPORARY SHORING AND CRIBBING NOTES:

1. The Contractor shall submit details and calculations for the temporary shoring and cribbing system he/she proposes to use for approval of the Engineer prior to ordering of material and implementation. Approval shall in no way relieve the Contractor fo responsibility for the safety of the structure. Calculations for the temporary shoring and cribbing system shall be designed by an Illinois Licensed Structural Engineer.
2. Materials used for the temporary shoring and cribbing system shall be in accordance with the Standard Specifications and clearly shown in the Contractor's submittal.
3. Cost of temporary shoring and cribbing shall be included with Removal of Existing Structures No. 6 and Removal of Existing Structures No. 7.
4. Design Load:
   DL = 110 kips (Service Level)
   LL = 35 kips (Service Level)

*Dimension measured to ℄ Pier perpendicular to ℄ I-74.

NOTES:

1. Abutment and Pier dimensions measured along skew unless otherwise noted.
2. Abutment removal includes wingwalls. Abutment removal dimensions taken along front face of abutment footing. Removal limits may shift as necessary to avoid concrete piles at stage removal line.
3. See Note 3 on sheet SR2 for information regarding vertical limits of removal.
4. See Existing Bridge plans.

benesch engineers · scientists · planners
Alfred Benesch & Company
205 North Michigan Avenue, Suite 2400
Chicago, Illinois 60601
312-565-0450 Job No. 10056

FILE NAME =	USER NAME = mbecker	DESIGNED - JLS/DTS	REVISED -	STATE OF ILLINOIS DEPARTMENT OF TRANSPORTATION	STAGE REMOVAL DETAILS 5 OF 5 STRUCTURE NO. 090-0014 / 0015 REMOVAL	F.A.I. RTE.	SECTION	COUNTY	TOTAL SHEETS / SHEET NO.
		CHECKED - KWS	REVISED -			74	90-(14R;14HB-4,14,14HVB)BR1	TAZEWELL	2433 / 2075
xxxxxxx_68620_07_stg5.dgn	PLOT SCALE =	DRAWN - JLS/DTS	REVISED -					CONTRACT NO. 68620	
	PLOT DATE = 7/16/2012	CHECKED - KWS	REVISED -		SHEET NO. SR7 OF SR22 SHEETS		ILLINOIS FED. AID PROJECT		

X:\10000S\10056\Engineering_Documents_Phase_II\174overRR\Final\xxxxxxx_68620_07_stg5.dgn 9:59:31 AM 7/16/2012

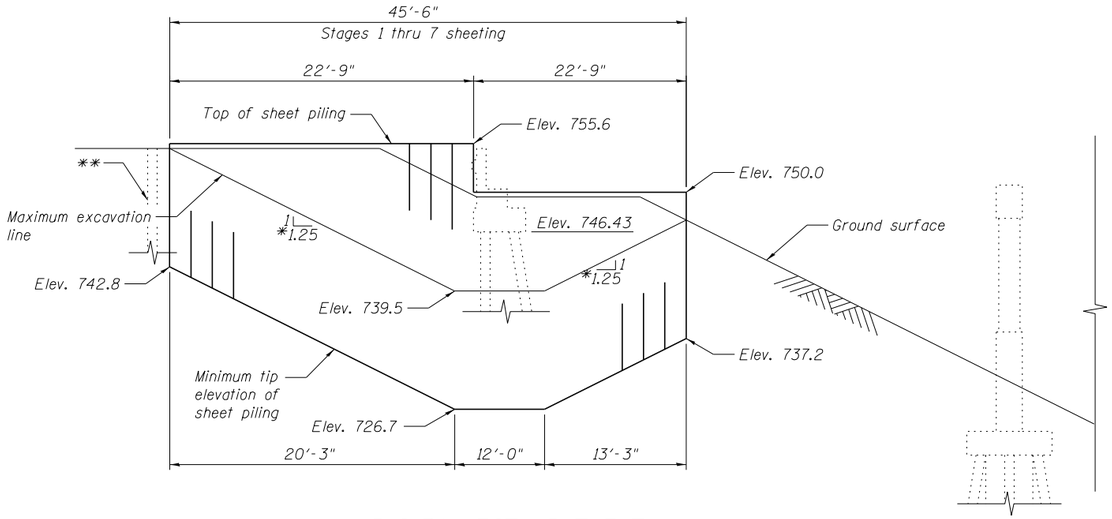

WB I-74 WEST ABUTMENT

(Minimum Section Modulus = 25.2 cu. in./ft.)

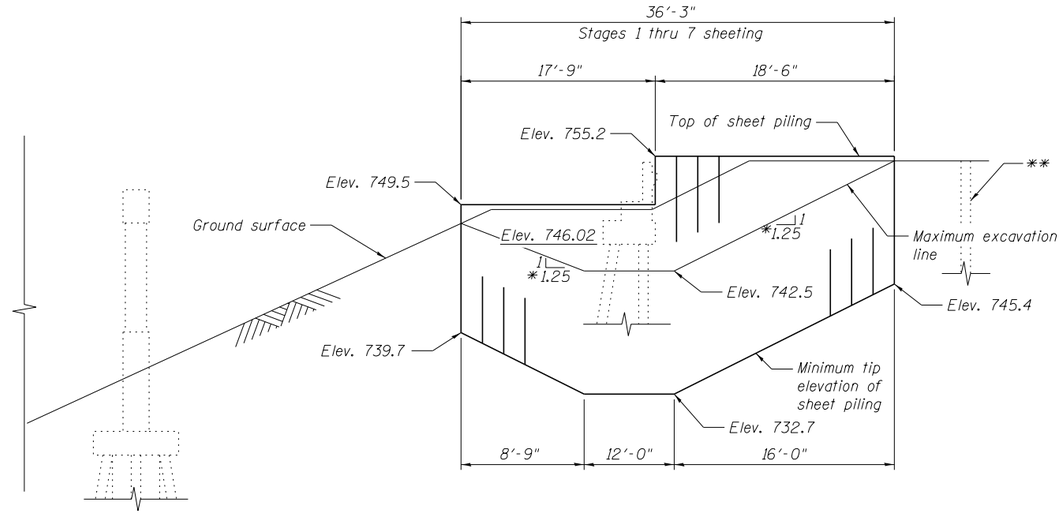

WB I-74 EAST ABUTMENT

(Minimum Section Modulus = 11.7 cu. in./ft.)

BILL OF MATERIAL

ITEM	UNIT	TOTAL
Temporary Sheet Piling	Sq. Ft.	2,785

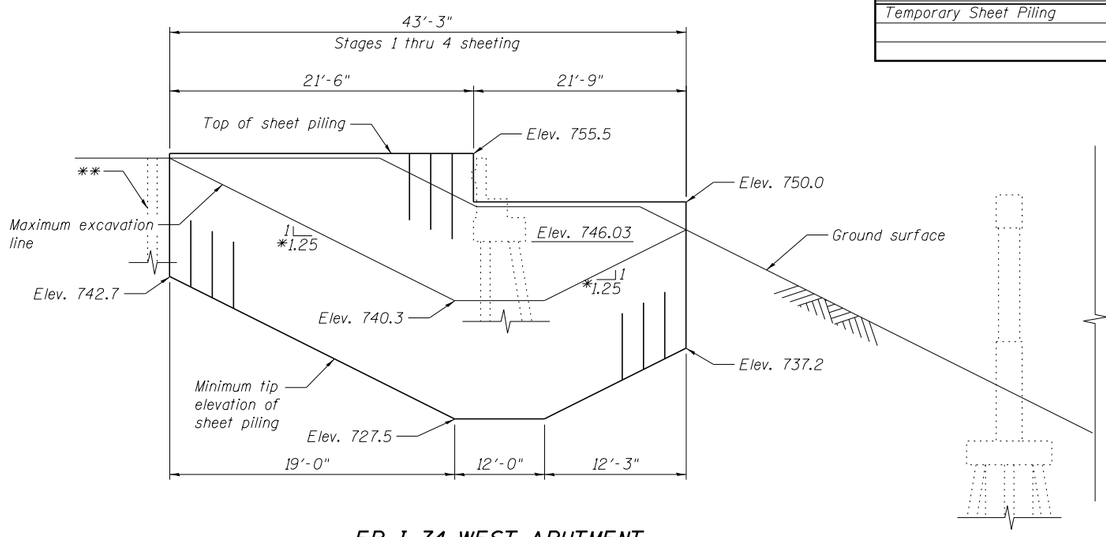

EB I-74 WEST ABUTMENT

(Minimum Section Modulus = 25.2 cu. in./ft.)

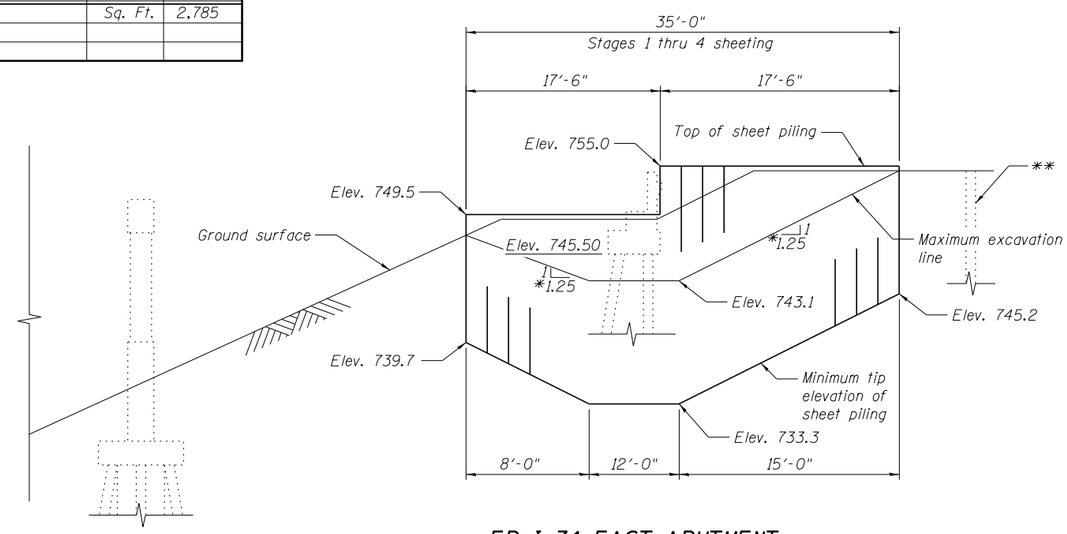

EB I-74 EAST ABUTMENT

(Minimum Section Modulus = 11.7 cu. in./ft.)

NOTES:

1. If the Contractor chooses to alter the temporary cantilevered sheet piling design requirements shown on the plans, a design submittal including plan details and calculations will be required for review and acceptance by the Engineer.

2. The Contractor shall connect the first sheet to the existing abutment wall to ensure stability of sheets driven to the top of the existing footing. This connection shall be reviewed and accepted by the Engineer and included in the cost for Temporary Sheet Piling.

3. Contractor has option to excavate and cut off piling or to extract piles. Any excavation required to perform the removal and/or staging shall be included in the cost of Removal of Existing Structures at the location specified.

*Slope of maximum excavation line measured parallel to temporary sheet piling.

**Existing creosote timber approach pile. See Note 3 on Sheet SR2 for details of removal.

benesch
engineers · scientists · planners
Alfred Benesch & Company
205 North Michigan Avenue, Suite 2400
Chicago, Illinois 60601
312-565-0450 Job No. 10056

FILE NAME =	USER NAME = mbecker	DESIGNED - MFB	REVISED -
		CHECKED - MRB/KWS	REVISED -
xxxxxxx_68620_08_sht.dgn	PLOT SCALE =	DRAWN - JLS	REVISED -
	PLOT DATE = 7/16/2012	CHECKED - MRB/KWS	REVISED -

STATE OF ILLINOIS
DEPARTMENT OF TRANSPORTATION

TEMPORARY SHEETING DETAILS
STRUCTURE NO. 090-0014 / 0015 REMOVAL

SHEET NO. SR8 OF SR22 SHEETS

F.A.I. RTE.	SECTION	COUNTY	TOTAL SHEETS	SHEET NO.
74	90-(14R;(14HB-4,14,14HVB)BR)	TAZEWELL	2433	2076
		CONTRACT NO. 68620		
		ILLINOIS FED. AID PROJECT		

X:\100005\10056\Engineering_Documents_Phase_II\74overRR\Final\xxxxxxx_68620_08_sht.dgn 7:44:42 AM 7/16/2012

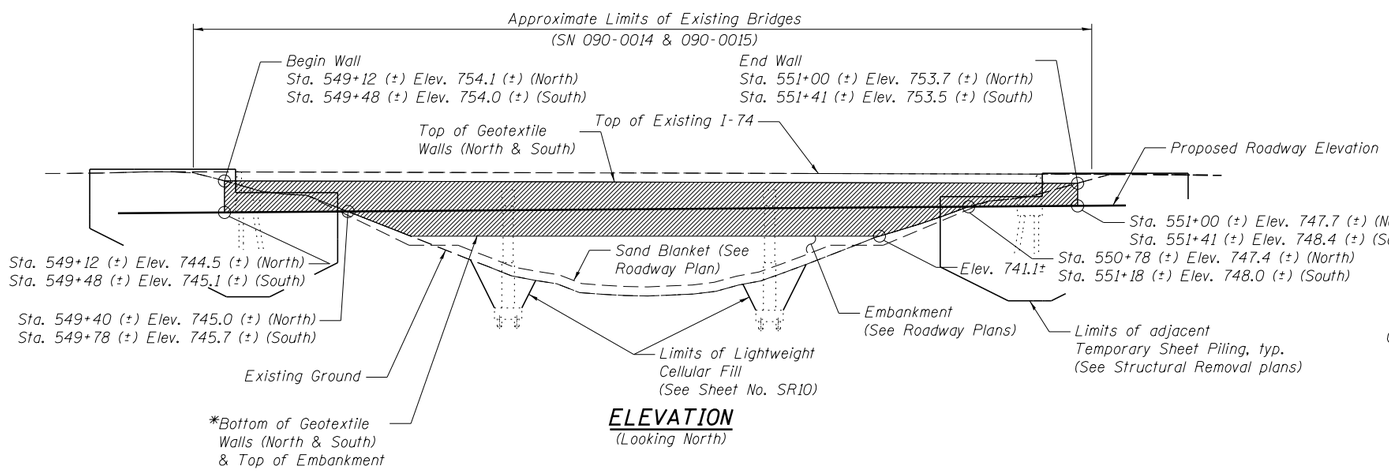

ELEVATION
(Looking North)

*During Stage 1, embankment shall be placed under existing SN 090-0014 & 090-0015 to within 10'-0" of bottom of existing beams. The base of the proposed temporary geotextile retaining walls shall be located at the top of this embankment.

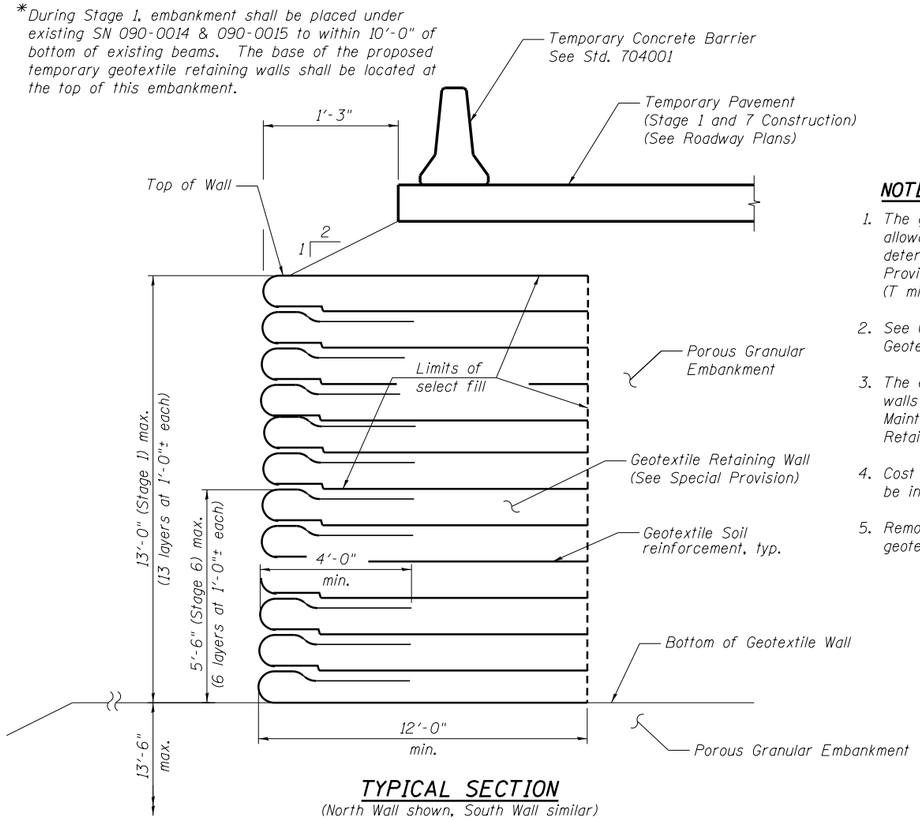

TYPICAL SECTION
(North Wall shown, South Wall similar)

NOTES:

1. The geotextile soil reinforcement shall have a minimum allowable tensile strength (T min.) of 53.8 lb./in. as determined by the procedure described in the Special Provision. The computations supporting the determination of (T min.) shall be submitted to the engineer for approval.
2. See General Plan and Elevation for location of Temporary Geotextile Retaining Walls.
3. The elevation of the roadway between the geotextile retaining walls shall be lowered during Stage 6. For details, see the Maintenance of Traffic plans. Cost included in Geotextile Retaining Wall.
4. Cost of soil reinforcement, select fill and form brace shall be included in the cost of Geotextile Retaining Wall.
5. Remove existing concrete slopewall prior to placement of geotextile retaining wall.

BILL OF MATERIAL
(North & South Wall)

ITEM	UNIT	TOTAL
Geotextile Retaining Wall	Sq. Ft.	4,144

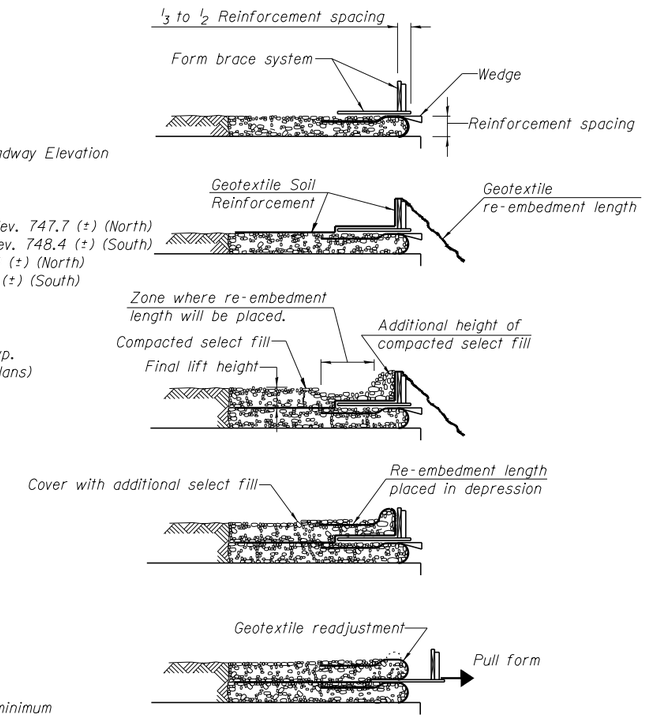

1. Place form brace system on completed reinforcement level; back from the finished fabric face a distance of 1/3 to 1/2 the geotextile reinforcement spacing.
2. Position fabric so that the required geotextile re-embedment length extends over the top of the form brace and the design reinforcement width is placed with no slack against the previous level.
3. Compact select fill material in lifts to final lift height, create (±3") depression in zone where re-embedment length will be located and place additional height of compacted select fill against form brace.
4. Fold geotextile re-embedment length back over form brace into zone where depression was made in select fill and place additional select fill (±3") to embed geotextile and bring to final lift height.
5. Pull form brace outward allowing geotextile face to slightly readjust to form tight round face level with plan reinforcement spacing.

TEMPORARY GEOTEXTILE WALL CONSTRUCTION SEQUENCE

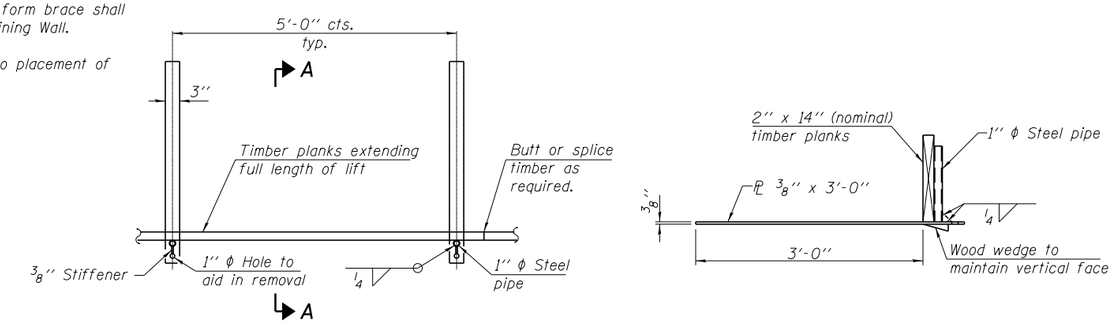

PLAN

SECTION A-A

TEMPORARY GEOTEXTILE FORM BRACE DETAIL
(This is a suggested detail, the Contractor is responsible for the design of the form brace system to be used)

benesch
engineers · scientists · planners

Job No. 10056

FILE NAME = xxxxxxx_68620_09_gwl.dgn	USER NAME = mbecker	DESIGNED - MFB/DTS	REVISED -
		CHECKED - MRB/SCW	REVISED -
	PLOT SCALE =	DRAWN - MFB/DTS	REVISED -
	PLOT DATE = 7/16/2012	CHECKED - KWS	REVISED -

STATE OF ILLINOIS
DEPARTMENT OF TRANSPORTATION

TEMPORARY GEOTEXTILE WALL DETAILS 1 OF 2
STRUCTURE NO. 090-0014 / 0015 REMOVAL
SHEET NO. SR9 OF SR22 SHEETS

F.A.I. RTE.	SECTION	COUNTY	TOTAL SHEETS	SHEET NO.
74	90-(14R;(14HB-4,14,14HVB)BR)	TAZEWELL	2433	2077
		CONTRACT NO. 68620		
		ILLINOIS FED. AID PROJECT		

7/16/2012 7:44:43 AM X:\100005\10056\Engineering_Documents_Phase_II\I74overRR\Final\xxxxxxx_68620_09_gwl.dgn

BILL OF MATERIAL

ITEM	UNIT	TOTAL
Porous Granular Embankment	Cu. Yd.	1,544
Structure Excavation	Cu. Yd.	474
Lightweight Cellular Concrete Fill	Cu. Yd.	474

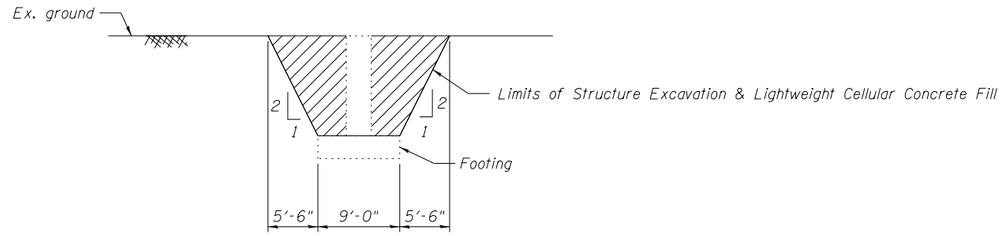

SECTION C-C

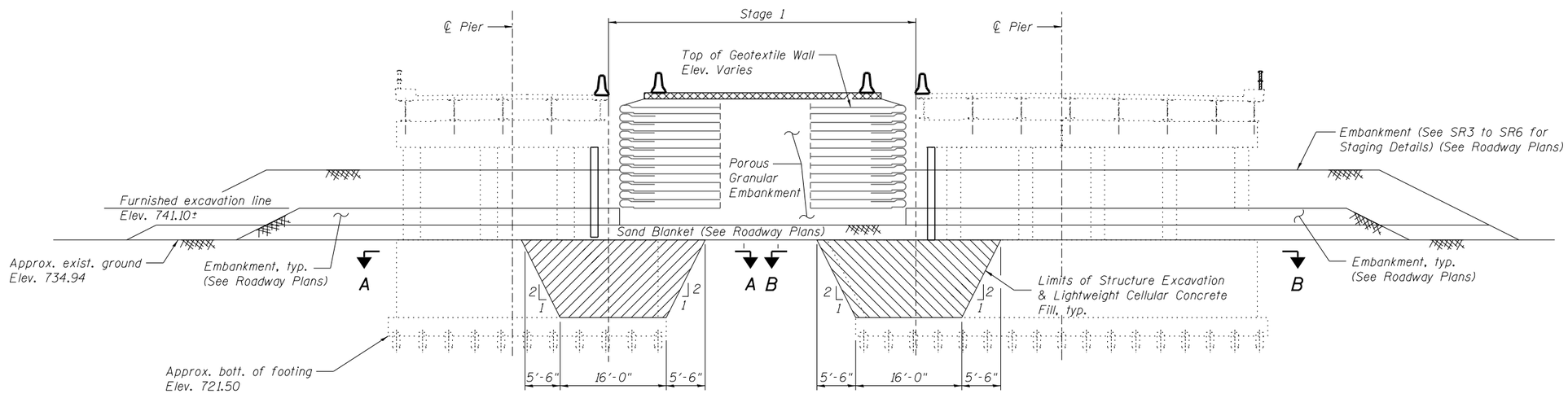

SECTION AT EXISTING PIERS

(Looking Upstation After Stage 1 Construction, unless otherwise noted)

NOTES:

1. Hatched areas indicate pay limits of Structure Excavation and Lightweight Cellular Concrete Fill (Class IV).
2. Lightweight Cellular Concrete Fill shall be Class IV as specified in the Special Provision "Lightweight Cellular Concrete Fill".
3. For Furnished Excavation details and quantities, see roadway plans.
4. For Staging Details, see SR3 to SR6.

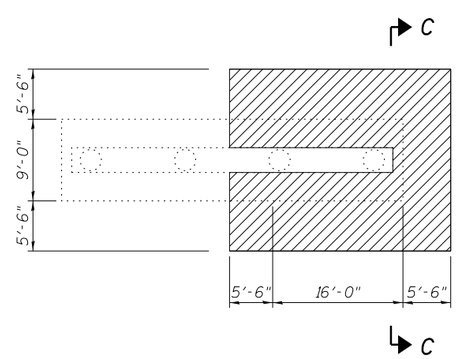

SECTION A-A

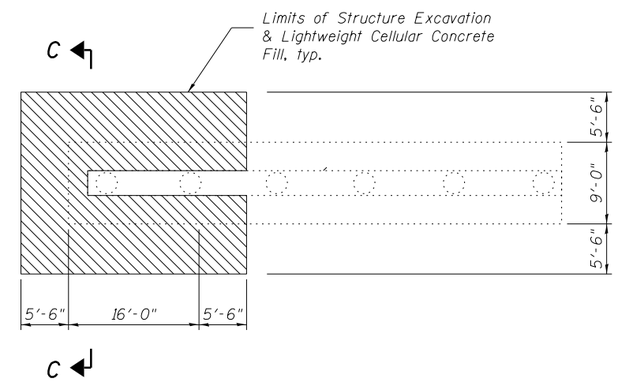

SECTION B-B

benesch
engineers · scientists · planners
Alfred Benesch & Company
205 North Michigan Avenue, Suite 2400
Chicago, Illinois 60601
312-565-0450 Job No. 10056

FILE NAME =	USER NAME = mbecker	DESIGNED - DTS	REVISED -
xxxxxxx_68620_10_gw2.dgn		CHECKED - SCW	REVISED -
	PLOT SCALE =	DRAWN - PRT	REVISED -
	PLOT DATE = 7/16/2012	CHECKED - KWS	REVISED -

STATE OF ILLINOIS
DEPARTMENT OF TRANSPORTATION

TEMPORARY GEOTEXTILE WALL DETAILS 2 OF 2
STRUCTURE NO. 090-0014 / 0015 REMOVAL

SHEET NO. SR10 OF SR22 SHEETS

F.A.I. RTE.	SECTION	COUNTY	TOTAL SHEETS	SHEET NO.
74	90-(14R;(14HB-4,14,14HVB)BR)	TAZEWELL	2433	2078
		CONTRACT NO. 68620		
		ILLINOIS FED. AID PROJECT		

X:\100005\10056\Engineering_Documents_Phase_II\I74overRR\Final\xxxxxxx_68620_10_gw2.dgn 7:44:44 AM 7/16/2012

When "A" is 3'-6" or less, the temporary concrete barrier shall be anchored to the new slab according to Detail I or Detail II. No anchorage is required when "A" is greater than 3'-6".

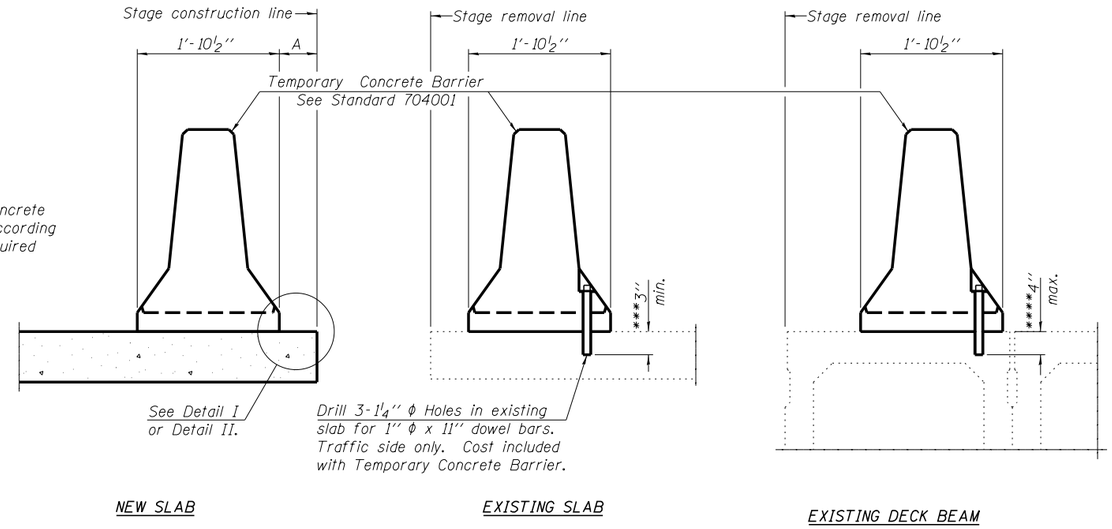

SECTIONS THRU SLAB OR DECK BEAM

NOTES

Detail I - With Bar Splicer or Couplers:
Connect one (1) 1'' x 7' 'x ''W'' steel PL to the top layer of couplers with 2-⅝'' ϕ bolts screwed to coupler at approximate ℄ of each barrier panel.

Detail II - With Extended Reinforcement Bars:
Connect one (1) 1'' x 7'' x ''W'' steel PL to the concrete slab or concrete wearing surface with 2-⅝'' ϕ Expansion Anchors or cast in place inserts spaced between the top layer of reinforcement at approximate ℄ of each barrier panel.

Cost of anchorage is included with Temporary Concrete Barrier.

The 1'' x 7'' x ''W'' plate shall not be removed until stage II construction forms and all reinforcement bars are in place and the concrete is ready to be placed.

*** Dimension shown is minimum required embedment into concrete. If hot-mix asphalt wearing surface is present, minimum embedment shall be in addition to wearing surface depth.

**** If existing deck beam is to remain in place after stage construction, embedment shall only be into wearing surface and not into existing deck beam concrete.

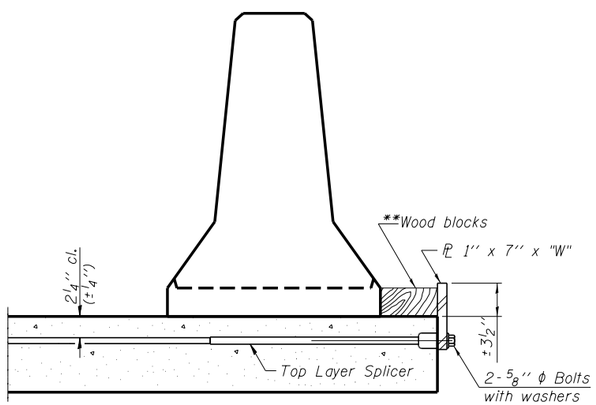

DETAIL I

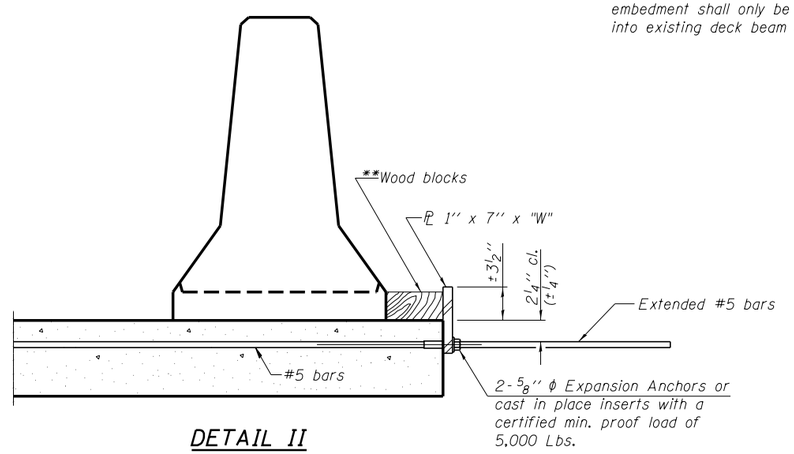

DETAIL II

** Wood blocks may be omitted when required to provide minimum stage traffic lane width. When the wood blocks are omitted, the concrete barrier shall be in direct contact with the steel retainer plate.

"W" = Top bars spacing + 4''

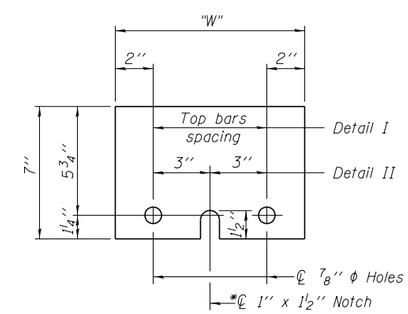

STEEL RETAINER PL 1'' x 7'' x ''W''

* Required only with Detail II

R-27

7-1-10

benesch
engineers · scientists · planners
Alfred Benesch & Company
205 North Michigan Avenue, Suite 2400
Chicago, Illinois 60601
312-565-0450 Job No. 10056

FILE NAME = xxxxxxx_68620_11_tmpbr.dgn	USER NAME = mbecker	DESIGNED - JLS	REVISED -	STATE OF ILLINOIS DEPARTMENT OF TRANSPORTATION	TEMPORARY CONCRETE BARRIER FOR STAGE CONSTRUCTION STRUCTURE NO. 090-0014 / 0015 REMOVAL	F.A.I. RTE.	SECTION	COUNTY	TOTAL SHEETS	SHEET NO.
		CHECKED - MRB	REVISED -			74	90-(14R;(14HB-4,14,14HVB)BR)	TAZEWELL	2433	2079
	PLOT SCALE =	DRAWN - JLS	REVISED -					CONTRACT NO. 68620		
	PLOT DATE = 7/16/2012	CHECKED - MRB	REVISED -		SHEET NO. SR11 OF SR22 SHEETS		ILLINOIS	FED. AID PROJECT		

X:\100005\10056\Engineering_Documents_Phase_II\174overRR\Final\xxxxxxx_68620_11_tmpbr.dgn 7:44:45 AM 7/16/2012

STATE OF ILLINOIS
DEPARTMENT OF PUBLIC WORKS & BUILDINGS
DIVISION OF HIGHWAYS

ROUTE NO.	SEC.	COUNTY	TOTAL SHEETS	SHEET NO.
F.A.I. 74	90-14HB-3, 14HB-4, 14VB	TAZEWELL	19	15
FED. ROAD DIST. NO. 7	ILLINOIS	PROJECT G-74-4(049) 91		

ROUTE NO.	SEC.	COUNTY	TOTAL SHEETS	SHEET NO.
FAI 74	90-14HB-3, 14HB-4, 14VB	TAZEWELL	89	40
FED. ROAD DIST. No. 7	ILLINOIS	PROJECT G-74-4(049) 91		

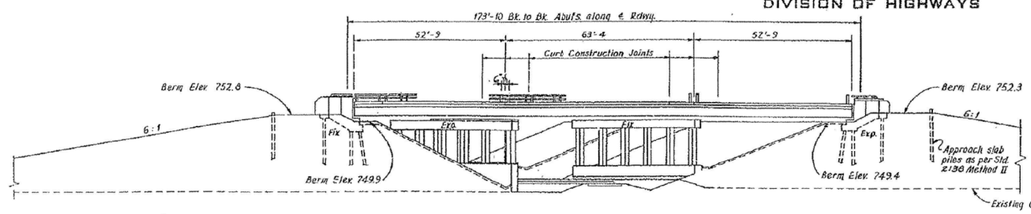

ELEVATION
SCALE: 1" = 20'

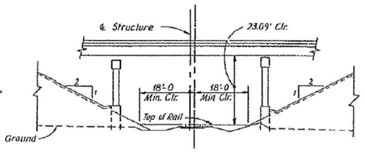

SECTION "A-A"
SCALE: 1" = 20'

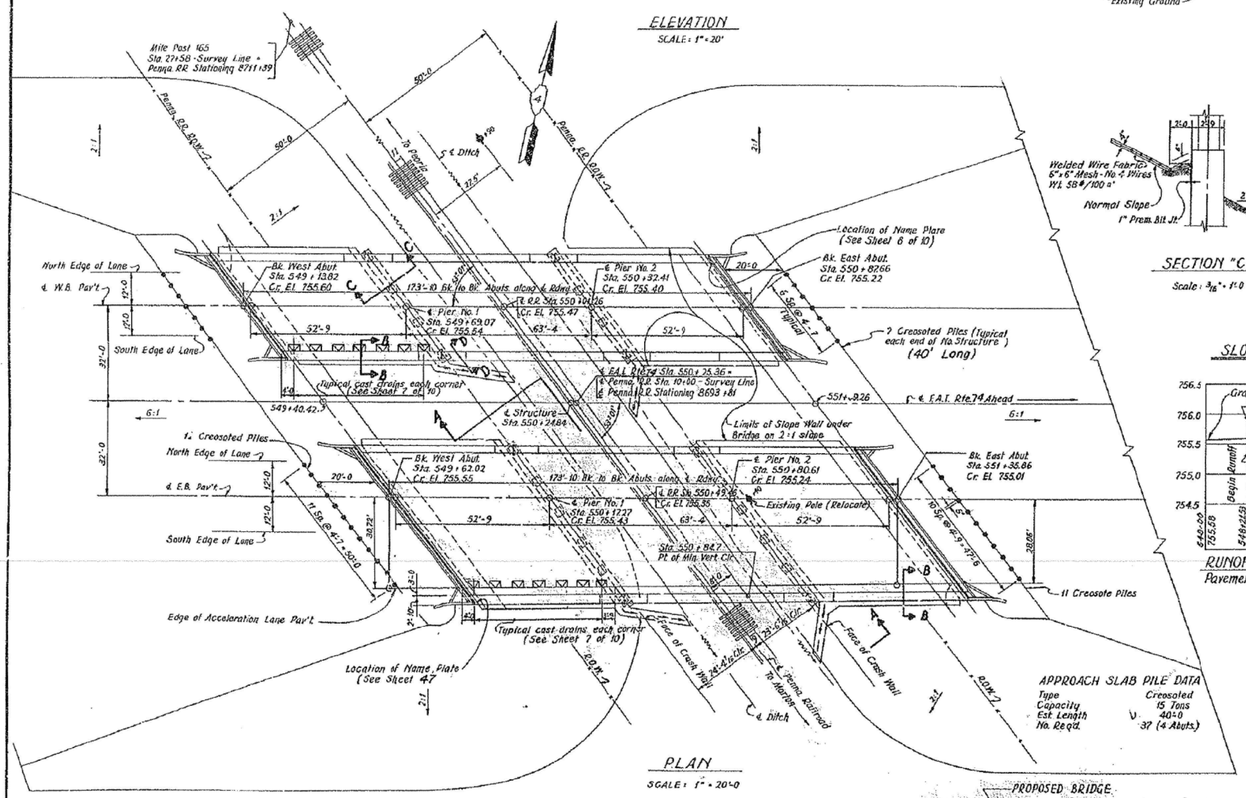

PLAN
SCALE: 1" = 20'-0

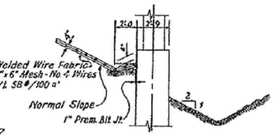

SECTION "C-C"
Scale: 3/16" = 1'-0

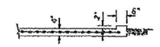

SECTION "B-B"
Scale: 3/8" = 1'-0

SECTION "D-D"
Scale: 3/8" = 1'-0

SLOPE WALL DETAILS

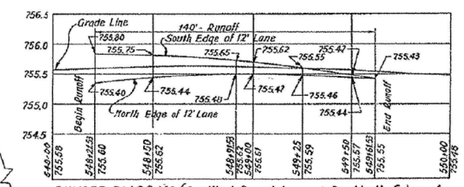

RUNOFF DIAGRAM (For West Bound Lanes & for North Edge of Pavement East Bound Lanes)
SCALE: 1" = 30' HORZ., 1" = 1' VERT.

GENERAL NOTES

Class "X" Concrete shall be used throughout except as noted.

The Concrete Floor shall be finished in accordance with applicable provisions of Article 51.19 of the Standard Specifications and shall be poured in one continuous operation within limits of construction joints shown.

All curbs and slab outside of longitudinal bonded construction joint shall be poured monolithically.

Rivets ¾" diameter. Open holes 15/16" diameter unless noted. Field connections riveted unless noted.

All rollers, rockers, bearing plates, lead plates, pintles, and anchor bolts shall be fabricated and set in accordance with Article 51.15 of the Standard Specifications and are included for payment as Furnishing and Erecting Structural Steel.

Except as otherwise provided, all Structural Steel shall receive one shop coat of red lead paint and two field coats of aluminum paint See Articles 56.1 to 56.5 inclusive of the Standard Specifications All paint shall be furnished and applied by the Contractor. All Structural Steel shall be inspected by the Illinois Division of Highways before painting.

The Contractor shall drive two test piles in permanent locations as shown on the plans before ordering remainder of piles.

Chamfers shall be provided in accordance with Articles 51.12 and 52.6 of the Standard Specifications.

All reinforcing bar laps shall be a minimum of 20 bar diameters.

Embankment shall be constructed to elevation shown in accordance with Section 16 of the Standard Specifications before abutment and bridge approach piles are driven. All Concrete Piles at Abutments shall be driven in Precored Holes per Article 60.9 (c) of Standard Specifications.

TOTAL BILL OF MATERIALS SEC. 90-14VB

ITEM		SUPER	SUB	TOTAL
Class "X" Concrete	Cu. Yds.	397.1	796.0	1,193.1
Reinforcement Bars	Lbs.	86,400	58,526	144,926
Erecting Structural Steel	Lbs.	446,516		446,516
Furnishing & Erecting Metal Handrail	Lin. Ft.	746		746
Concrete Piles	Lin. Ft.		3315	3315
Creosoted Piles (20'-38')	Lin. Ft.		240	240
Creosoted Piles (over 38')	Lin. Ft.		8696	8696
Test Piles (Concrete)	Each		1	1
Slope Wall	Sq. Yds.		1,190	1,190
Class "A" Excavation for Struc.	Cu. Yds.		1,264	1,264
Name Plates	Each	2		2
Paved Ditch (3'-0)	Lin. Ft.			41
Test Piles (Timber)	Each		1	1

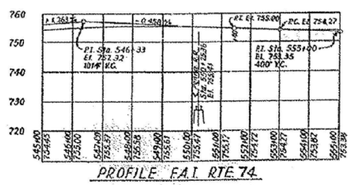

PROFILE F.A.I. RTE. 74
SCALE: 1" = 200' HORZ., 1" = 20' VERT.

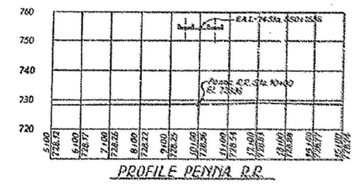

PROFILE PENNA. R.R.
SCALE: 1" = 200' HORZ., 1" = 20' VERT.

DESIGN STRESSES

fc = 1400 psi (Without earth pressure)
fc = 800 psi (With earth pressure)
fs = 20,000 psi (Reinf.)
fs = 18,000 psi (Struct.)
n = 10
Loading = H20-S16-44 and Special Military
v = 75 psi (Pier Footing)

TOTAL BILL OF MATERIAL SEC. 90-14VF

Furnishing Structural Steel	Lbs.	446,516

LOCATION PLAN

DESIGNED	R.R.
CHECKED	E.L.
DRAWN	S.M.
CHECKED	R.R.

EXAMINED
ENGINEER OF BRIDGES AND TRAFFIC STRUCTURES
PASSED
ENGINEER OF DESIGN
APPROVED
CHIEF HIGHWAY ENGINEER

STATION 550+24.84
BUILT 196 BY
STATE OF ILLINOIS
F.A.I. RTE. 74 - SEC. 90-14VB
F.A. PROJ. 14-74-4(30)
LOADING H20-S16 & ALT.

LETTERING FOR NAME PLATE
See Standard 2113

090-0014 & 090-0015

GENERAL PLAN
F.A.I. ROUTE 74 SECTION 90-14VB
F.A.I. ROUTE 74 OVER PENNA. RAILROAD
STATION 550+24.84
TAZEWELL COUNTY

WARREN AND VAN PRAAG, INC.
CONSULTING ENGINEERS - DECATUR, ILLINOIS

1 OF 10

Rev. 12-8-59 Revised drainage ditches W.M.B.

FOR INFORMATION ONLY

benesch
engineers · scientists · planners
Alfred Benesch & Company
205 North Michigan Avenue, Suite 2400
Chicago, Illinois 60601
312-565-0450 Job No. 10056

FILE NAME =	USER NAME = mbecker	DESIGNED - MFB	REVISED -
xxxxxxx_68620_12_existl.dgn		CHECKED - MRB	REVISED -
	PLOT SCALE =	DRAWN - MFB	REVISED -
	PLOT DATE = 7/16/2012	CHECKED - MRB	REVISED -

STATE OF ILLINOIS
DEPARTMENT OF TRANSPORTATION

EXISTING PLANS 1 OF 11
STRUCTURE NO. 090-0014 / 0015 REMOVAL
SHEET NO. SR12 OF SR22 SHEETS

F.A.I. RTE.	SECTION	COUNTY	TOTAL SHEETS	SHEET NO.
74	90-(14R);(14HB-4,14,14HVB)BR)	TAZEWELL	2433	2080
		CONTRACT NO. 68620		
		ILLINOIS FED. AID PROJECT		

7/16/2012 7:44:45 AM X:\100000S\10056\Engineering_Documents_Phase_II\174overRR\Final\xxxxxxx_68620_12_existl.dgn

STATE OF ILLINOIS
DEPARTMENT OF PUBLIC WORKS & BUILDINGS
DIVISION OF HIGHWAYS

ROUTE No.	SEC.	COUNTY	TOTAL SHEETS	SHEET NO.
FAI 74	90-14VB-2 -14HB-4 -14.14R	TAZEWELL	89	41
FED. ROAD DIST. No. 7	ILLINOIS			

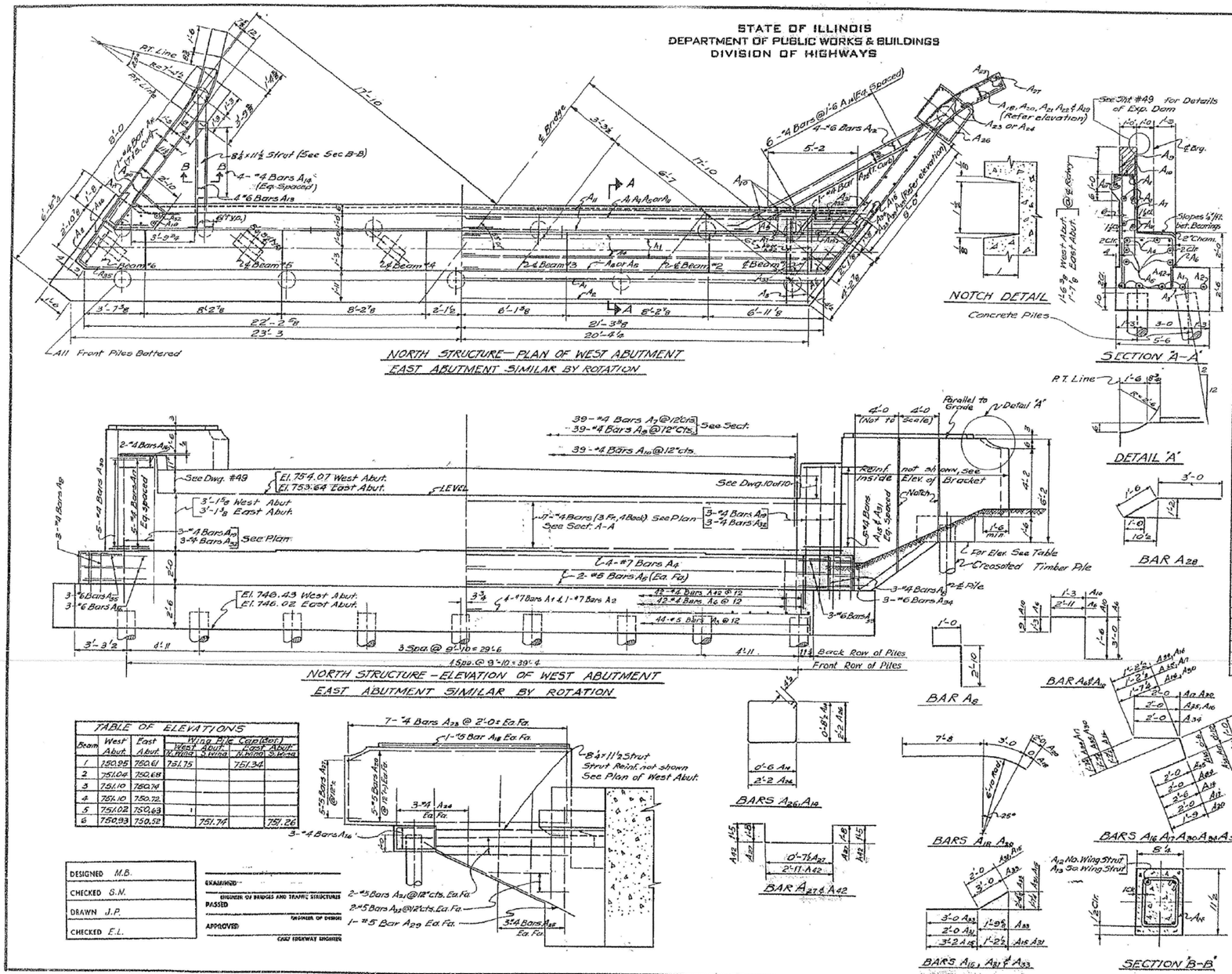

TABLE OF ELEVATIONS						
Beam	West Abut.	East Abut.	Wing Pile Cap (Bot.) West Abut. N. Wing	West Abut. S. Wing	East Abut. N. Wing	East Abut. S. Wing
1	750.95	750.61	751.75		751.34	
2	751.04	750.68				
3	751.10	750.74				
4	751.10	750.72				
5	751.02	750.63				
6	750.93	750.52		751.74		751.26

BILL OF MATERIAL - SO. STR.				
BAR	NO.	SIZE	LENGTH	SHAPE
A1	8	#7	35'-2	
A2	2	#7	34'-4	
A3	124	#5	5'-2	
A4	8	#7	34'-8	
A5	8	#5	34'-6	
A6	126	#4	7'-2	
A7	118	#4	5'-8	
A8	12	#4	3'-10	
A9	118	#4	7'-8	
A10	118	#4	3'-6	
A11	14	#4	34'-2	
A12	8	#6	14'-0	
A13	8	#6	8'-0	
A14	20	#4	3'-2	
A15	10	#4	5'-2	
A16	4	#4	5'-6	
A17	10	#4	4'-10	
A18	8	#5	10'-8	
A19	12	#4	7'-0	
A20	40	#5	12'-8	
A21	16	#5	7'-0	
A22	16	#5	3'-9	
A23	56	#4	4'-3	
A24	24	#4	3'-6	
A25	24	#4	5'-6	
A26	12	#4	9'-5	
A27	20	#5	3'-11½	
A28	2	#4	5'-6	
A29	8	#5	6'-8	
A30	10	#4	5'-0	
A31	10	#4	4'-0	
A32	12	#4	9'-0	
A33	6	#6	6'-0	
A34	6	#6	4'-10	
A35	6	#6	4'-6	
A36	6	#6	4'-3	
A37	8	#7	33'-7	
A39	2	#7	32'-8	
A38	8	#7	33'-1	
A40	8	#5	32'-9	
A41	14	#4	32'-7	
A42	126	#4	3'-9	
Class X Concrete			Cu. Yds.	135.8
Reinforcement Bars			Lbs.	6875
Creosoted Piles			Lin. Ft.	120
Concrete Piles			Lin. Ft.	1885
Test Piles (Conc.)			Ea.	1

BILL OF MATERIAL - NO. STR.				
BAR	NO.	SIZE	LENGTH	SHAPE
A1	16	#7	23'-0	
A2	4	#7	22'-10	
A3	88	#5	5'-2	
A4	8	#7	44'-0	
A5	16	#5	22'-10	
A6	82	#4	7'-2	
A7	78	#4	5'-8	
A8	12	#4	3'-10	
A9	78	#4	7'-8	
A10	78	#4	3'-6	
A11	28	#4	22'-8	
A12	8	#6	14'-0	
A13	8	#6	8'-0	
A14	20	#4	3'-2	
A15	10	#4	5'-2	
A16	4	#4	5'-6	
A17	10	#4	4'-10	
A18	8	#5	10'-8	
A19	12	#4	7'-0	
A20	40	#5	12'-8	
A21	16	#5	7'-0	
A22	16	#5	3'-9	
A23	56	#4	4'-3	
A24	24	#4	3'-6	
A25	24	#4	5'-6	
A26	12	#4	9'-5	
A27	20	#5	3'-11½	
A28	2	#4	5'-8	
A29	8	#5	10'-0	
A30	10	#4	5'-0	
A31	10	#4	4'-0	
A32	12	#4	4'-0	
A33	6	#6	6'-0	
A34	6	#6	4'-10	
A35	6	#6	4'-6	
A36	6	#6	4'-3	
A42	84	#4	3'-9	
Class X Concrete			Cu. Yds.	93.4
Reinforcement Bars			Lbs.	6697
Creosoted Piles			Lin. Ft.	120
Concrete Piles			Lin. Ft.	1430

PILE DATA (No. Structure)

	Concrete	Creosoted (Timber)
Type		
Capacity	30 Tons	10 Tons
Est. Length	65'-0	30'-0"
No. Req'd. (2 Abuts.)	22	4

ABUTMENTS - NO. STRUCTURE
F.A.I. ROUTE 74 SECTION 90-14VB

F.A.I. ROUTE 74 OVER PENNA RAILROAD
STATION 530+24.84
TAZEWELL COUNTY

WARREN AND VAN PRAAG, INC.
CONSULTING ENGINEERS - DECATUR, ILLINOIS

2 OF 10

DESIGNED	M.B.
CHECKED	S.N.
DRAWN	J.P.
CHECKED	E.L.

EXAMINED
ENGINEER OF BRIDGES AND TRAFFIC STRUCTURES
PASSED
ENGINEER OF DESIGN
APPROVED
CHIEF HIGHWAY ENGINEER

FOR INFORMATION ONLY

benesch
engineers · scientists · planners
Alfred Benesch & Company
205 North Michigan Avenue, Suite 2400
Chicago, Illinois 60601
312-565-0450 Job No. 10056

FILE NAME =	USER NAME = mbecker	DESIGNED - MFB	REVISED -
xxxxxxx_68620_13_exist2.dgn		CHECKED - MRB	REVISED -
	PLOT SCALE =	DRAWN - MFB	REVISED -
	PLOT DATE = 7/16/2012	CHECKED - MRB	REVISED -

STATE OF ILLINOIS
DEPARTMENT OF TRANSPORTATION

EXISTING PLANS 2 OF 11
STRUCTURE NO. 090-0014 / 0015 REMOVAL
SHEET NO. SR13 OF SR22 SHEETS

F.A.I. RTE.	SECTION	COUNTY	TOTAL SHEETS	SHEET NO.
74	90-(14R;(14HB-4,14,14HVB)BR)	TAZEWELL	2433	2081
		CONTRACT NO. 68620		
		ILLINOIS FED. AID PROJECT		

7/16/2012 7:44:59 AM X:\100005\10056\Engineering_Documents_Phase_II\174overRR\Final\xxxxxxx_68620_13_exist2.dgn

STATE OF ILLINOIS
DEPARTMENT OF PUBLIC WORKS & BUILDINGS
DIVISION OF HIGHWAYS

ROUTE No.	SEC.	COUNTY	TOTAL SHEETS	SHEET NO.
FAI 74	90-(14B-2 -14B-4 -14HB	TAZEWELL	89	42
FED. ROAD DIST. No. 7		ILLINOIS		

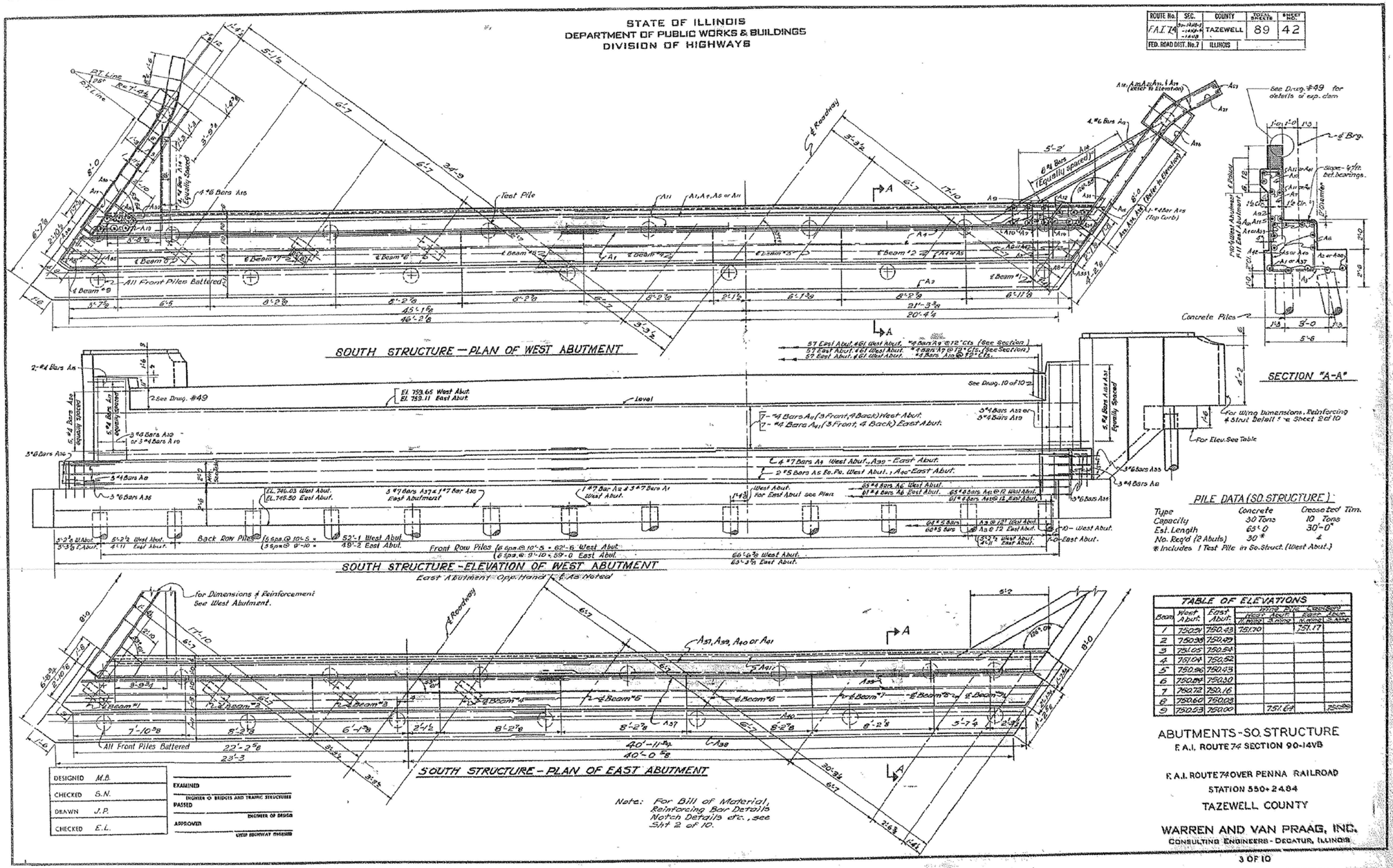

FOR INFORMATION ONLY

benesch
engineers · scientists · planners
Alfred Benesch & Company
205 North Michigan Avenue, Suite 2400
Chicago, Illinois 60601
312-565-0450 Job No. 10056

FILE NAME =	USER NAME = mbecker	DESIGNED - MFB	REVISED -	STATE OF ILLINOIS DEPARTMENT OF TRANSPORTATION	EXISTING PLANS 3 OF 11 STRUCTURE NO. 090-0014 / 0015 REMOVAL	F.A.I. RTE.	SECTION	COUNTY	TOTAL SHEETS	SHEET NO.
		CHECKED - MRB	REVISED -			74	90-(14R;(14HB-4,14,14HVB)BR)	TAZEWELL	2433	2082
xxxxxxx_68620_14_exist3.dgn	PLOT SCALE =	DRAWN - MFB	REVISED -		SHEET NO. SR14 OF SR22 SHEETS			CONTRACT NO. 68620		
	PLOT DATE = 7/16/2012	CHECKED - MRB	REVISED -					ILLINOIS FED. AID PROJECT		

X:\10000S\10056\Engineering_Documents_Phase_II\74over RR\Final\xxxxxxx_68620_14_exist3.dgn 7:45:12 AM 7/16/2012

STATE OF ILLINOIS
DEPARTMENT OF PUBLIC WORKS & BUILDINGS
DIVISION OF HIGHWAYS

ROUTE No.	SEC.	COUNTY	TOTAL SHEETS	SHEET NO.
FAI 74	20-14HB-3 -14HB-4 -14-HVB	TAZEWELL	89	43
FED. ROAD DIST. No. 7	ILLINOIS			

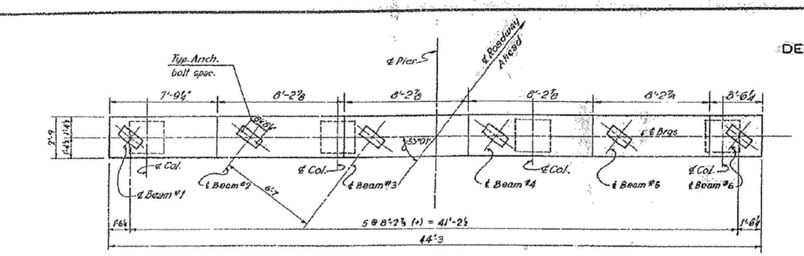

TOP PLAN

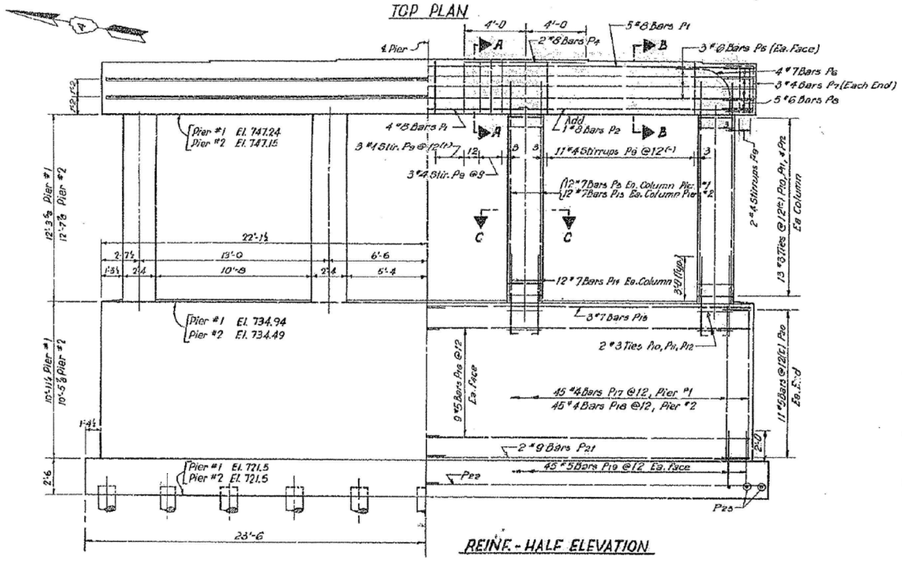

HALF ELEVATION

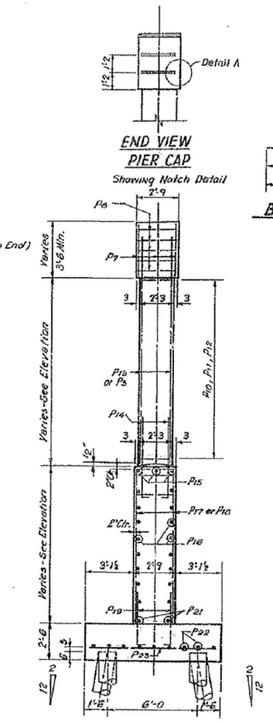

END VIEW PIER CAP
Showing Notch Detail

REINF. - HALF ELEVATION

END VIEW

NOTCH DETAIL

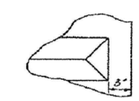

DETAIL A

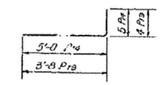

BARS P14 & P19

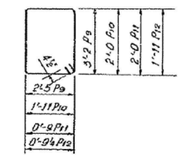

BARS P9, P10, P11 & P12

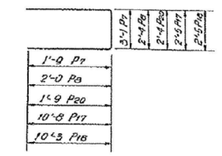

BARS P7, P8, P17, P18 & P20

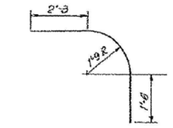

BAR P6

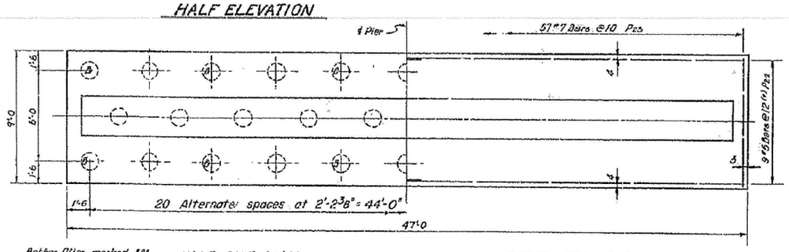

Batter Piles marked "B"

HALF PILE PLAN

REINF. - HALF PLAN

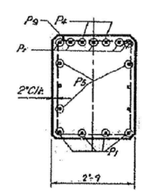

SECTION A-A

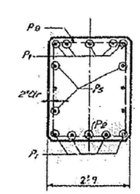

SECTION B-B

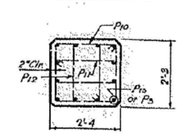

SECTION C-C

DETAILS FOR NORTH STRUCTURE
PIER #1 & #2
Piers are symmetrical except as noted.

BILL OF MATERIAL SOUTH STRUCTURE - 2 PIERS				
Bar	No.	Size	Length	Shape
P1	184	#7	8'-6	
P2	18	#5	35'-6	
P3	18	#5	34'-10	
P4	264	#5	4'-0	
P5	4	#8	34'-3	
P6	4	#8	33'-8	
P7	6	#7	34'-1	
P8	6	#7	33'-6	
P9	36	#5	33'-9	
P10	36	#5	33'-2	
P11	67	#4	23'-9	
P12	65	#4	22'-11	
P13	44	#5	5'-10	
P14	144	#7	5'-5	
P15	174	#3	8'-7	
P16	174	#3	6'-1½	
P17	174	#3	8'-3	
P18	72	#7	13'-10	
P19	72	#7	14'-2	
P20	12	#8	32'-8	
P21	12	#8	32'-1	
P22	4	#8	22'-2	
P23	4	#8	21'-8	
P24	12	#8	32'-8	
P25	12	#8	32'-0	
P26	1	#8	14'-9	
P27	1	#8	14'-4	
P28	8	#8	8'-0	
P29	7	#10	13'-8	
P30	7	#10	13'-6	
P32	16	#7	6'-6	
P33	26	#4	11'-11	
P34	26	#4	12'-3	
P35	68	#4	12'-7	
P36	40	#8	16'-4	
P37	12	#4	6'-11	
P38	12	#4	6'-7	

BILL OF MATERIAL NORTH STRUCTURE - 2 PIERS				
Bar	No.	Size	Length	Shape
P1	18	#8	43'-11	
P2	4	#8	15'-5	
P3	48	#7	14'-3	
P4	8	#8	8'-0	
P5	12	#6	43'-11	
P6	16	#7	6'-6	
P7	12	#4	6'-7	
P8	20	#6	6'-4	
P9	76	#4	11'-11	
P10	120	#3	6'-7	
P11	120	#3	6'-3	
P12	120	#3	6'-1½	
P13	48	#7	14'-9	
P14	96	#7	5'-5	
P15	12	#7	23'-1	
P16	72	#5	23'-9	
P17	45	#4	23'-9	
P18	45	#4	22'-11	
P19	180	#5	4'-0	
P20	44	#5	5'-10	
P21	8	#9	23'-5	
P22	36	#5	24'-2	
P23	114	#7	8'-6	

BILL OF MATERIAL - ALL PIERS		
Class X Concrete	Cu. Yds.	564.8
Reinforcement Bars	Lbs.	42955
Class X Excavation	Cu. Yds.	1268
Creosoted Piles	Lin. Ft.	7216
Test Piles (Timber)	Ea.	1

PILE DATA (No. Structure)

Type	Creosoted
Capacity	20 Tons
Est. Length	44'-0
No. Req'd. (2 Piers)	64
(Test Pile in Pier 2 (No. Structure)	

ELEV. OF BRG. SEATS		
BEAM	PIER #1 NORTH STRUCTURE	PIER #2 NORTH STRUCTURE
1	750.79	750.72
2	750.86	750.80
3	750.93	750.85
4	750.92	750.84
5	750.84	750.75
6	750.74	750.65

PIERS-NO. STRUCTURE
F.A.I. ROUTE 74 SECTION 90-14VB

F.A.I. ROUTE 74 OVER PENNA RAILROAD
STATION 550+24.84
TAZEWELL COUNTY

WARREN AND VAN PRAAG, INC.
CONSULTING ENGINEERS - DECATUR, ILLINOIS

4 OF 10

DESIGNED	E.L.
CHECKED	M.B.
DRAWN	S.F.M.
CHECKED	E.L.

EXAMINED
ENGINEER OF BRIDGES AND TRAFFIC STRUCTURES
PASSED
ENGINEER OF DESIGN
APPROVED
CHIEF HIGHWAY ENGINEER

FOR INFORMATION ONLY

benesch
engineers · scientists · planners
Alfred Benesch & Company
205 North Michigan Avenue, Suite 2400
Chicago, Illinois 60601
312-565-0450 Job No. 10056

FILE NAME =	USER NAME = mbecker	DESIGNED - MFB	REVISED -
		CHECKED - MRB	REVISED -
xxxxxxx_68620_15_exist4.dgn	PLOT SCALE =	DRAWN - MFB	REVISED -
	PLOT DATE = 7/16/2012	CHECKED - MRB	REVISED -

STATE OF ILLINOIS
DEPARTMENT OF TRANSPORTATION

EXISTING PLANS 4 OF 11
STRUCTURE NO. 090-0014 / 0015 REMOVAL
SHEET NO. SR15 OF SR22 SHEETS

F.A.I. RTE.	SECTION	COUNTY	TOTAL SHEETS	SHEET NO.
74	90-[14R;(14HB-4,14,14HVB)BR]	TAZEWELL	2433	2083
		CONTRACT NO. 68620		
		ILLINOIS FED. AID PROJECT		

7/16/2012 7:45:26 AM X:\10000S\10056\Engineering_Documents_Phase_II\I74over-RR\Final\xxxxxxx_68620_15_exist4.dgn

STATE OF ILLINOIS
DEPARTMENT OF PUBLIC WORKS & BUILDINGS
DIVISION OF HIGHWAYS

ROUTE No.	SEC.	COUNTY	TOTAL SHEETS	SHEET No.
F.A.I. 74	90-14VB-2 90-14VB-4 90-14VB	TAZEWELL	89	44
FED. ROAD DIST. No. 7		ILLINOIS		

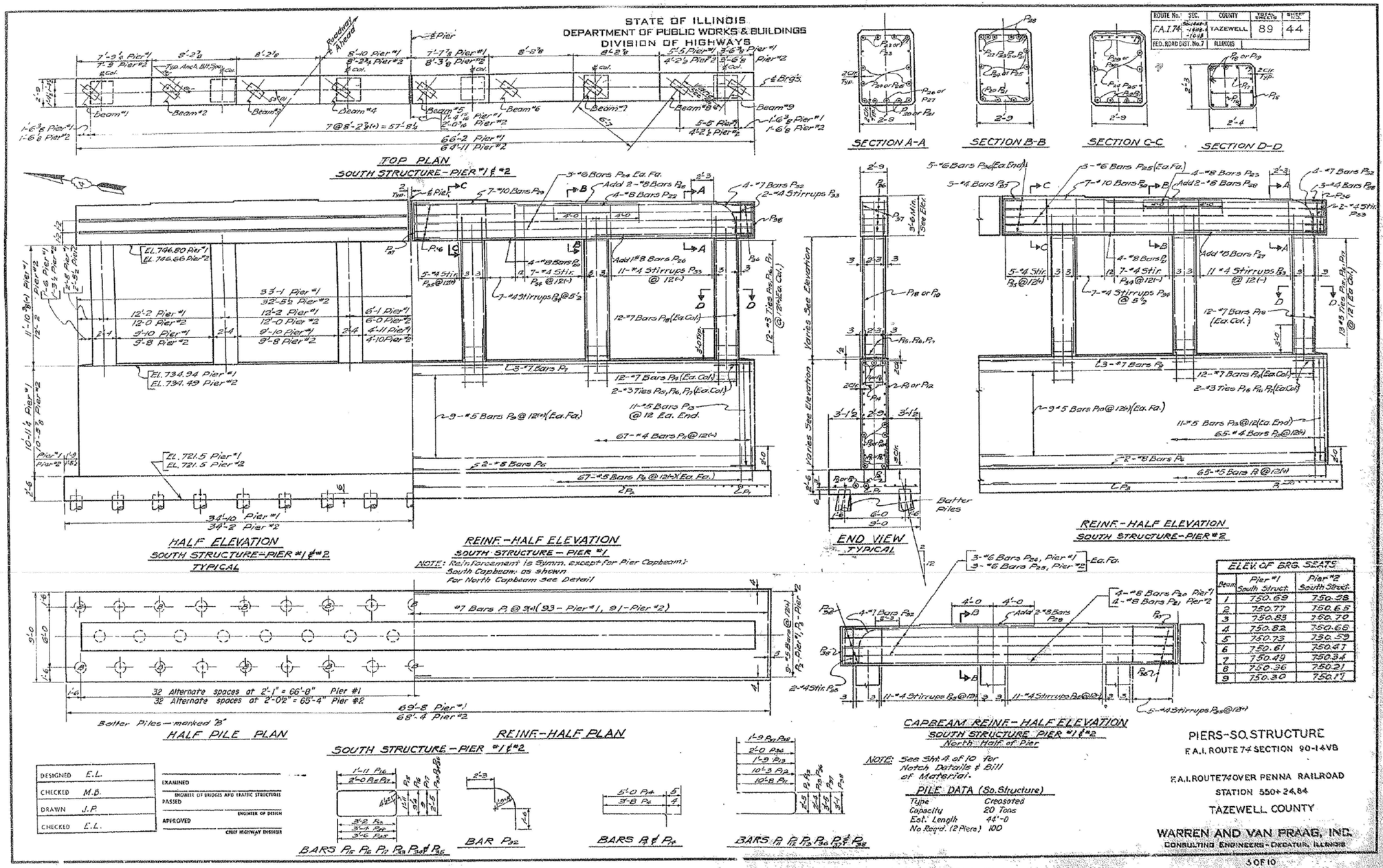

benesch
engineers · scientists · planners
Alfred Benesch & Company
205 North Michigan Avenue, Suite 2400
Chicago, Illinois 60601
312-565-0450 Job No. 10056

FOR INFORMATION ONLY

FILE NAME =	USER NAME = mbecker	DESIGNED - MFB	REVISED -
		CHECKED - MRB	REVISED -
xxxxxxx_68620_16_exist5.dgn	PLOT SCALE =	DRAWN - MFB	REVISED -
	PLOT DATE = 7/16/2012	CHECKED - MRB	REVISED -

STATE OF ILLINOIS
DEPARTMENT OF TRANSPORTATION

EXISTING PLANS 5 OF 11
STRUCTURE NO. 090-0014 / 0015 REMOVAL
SHEET NO. SR16 OF SR22 SHEETS

F.A.I. RTE.	SECTION	COUNTY	TOTAL SHEETS	SHEET NO.
74	90-[14R;(14HB-4,14,14HVB)BR]	TAZEWELL	2433	2084
		CONTRACT NO. 68620		
		ILLINOIS FED. AID PROJECT		

7/16/2012 7:45:39 AM X:\10000S\10056\Engineering_Documents_Phase_II\74overRR\Final\xxxxxxx_68620_16_exist5.dgn

STATE OF ILLINOIS
DEPARTMENT OF PUBLIC WORKS & BUILDINGS
DIVISION OF HIGHWAYS

ROUTE NO.	SEC.	COUNTY	TOTAL SHEETS	SHEET NO.
F.A.I. 74	90-14HB-5 -14HB-14 -14VB-1	TAZEWELL	89	45
FED. ROAD DIST. No. 7	ILLINOIS			

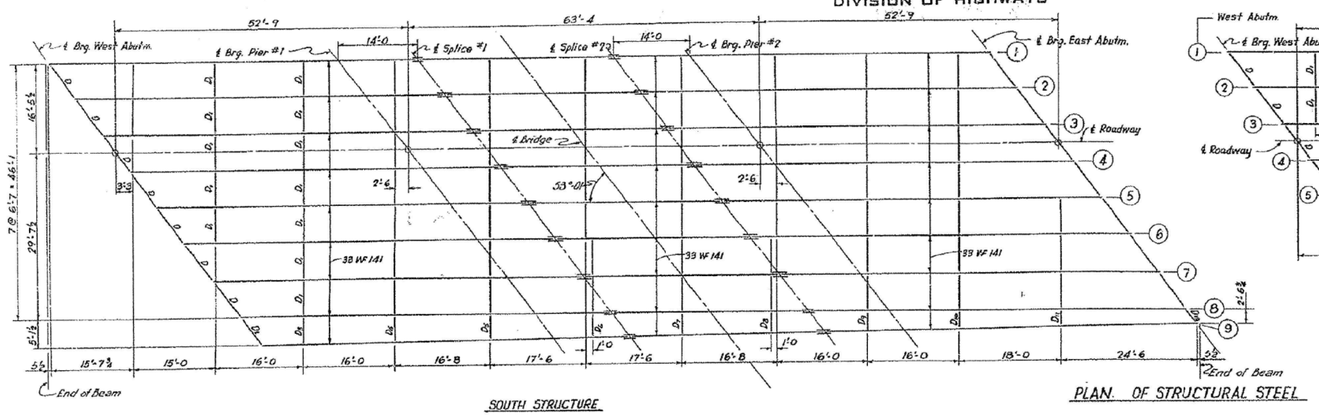

SOUTH STRUCTURE

PLAN OF STRUCTURAL STEEL

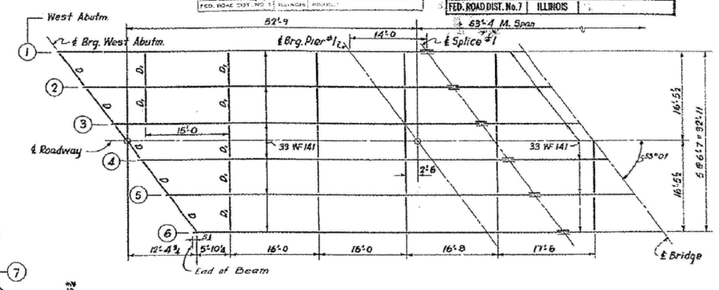

NORTH STRUCTURE - HALF PLAN
SYMMETRICAL ABOUT ℄ OF BRIDGE

Note: Interior Diaphrams are mark D, ℄
End Diaphrams are mark D unless noted.

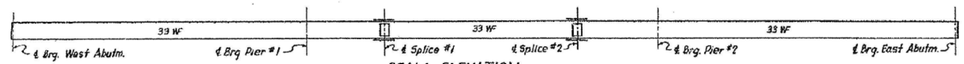

BEAM ELEVATION

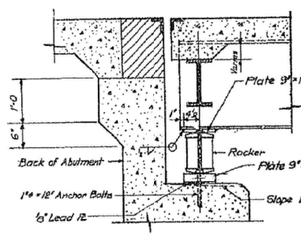

SECTION AT ABUTMENT

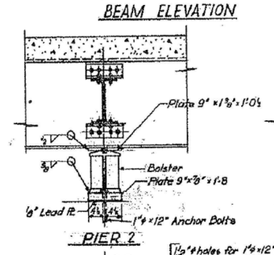

PIER 2

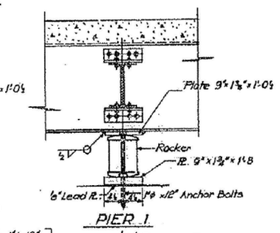

PIER 1

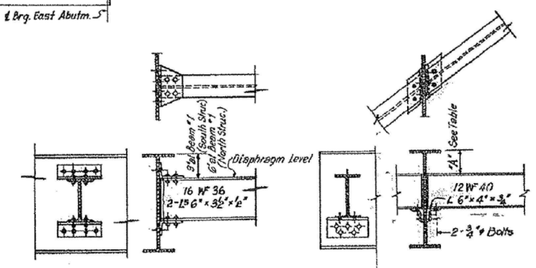

DIAPHRAGM D_1 D_3 D_4 D_5 D_6 D_7 D_8 D_9 D_{10} & D_{11}

DIAPHRAGM D_2 & D_{12}

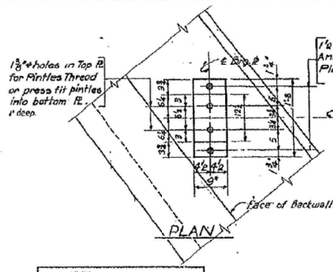

PLAN

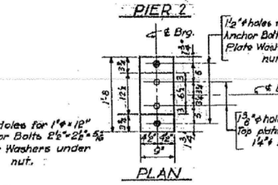

PLAN

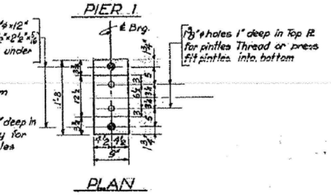

PLAN

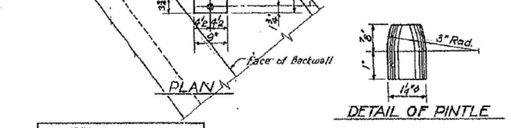

DETAIL OF PINTLE

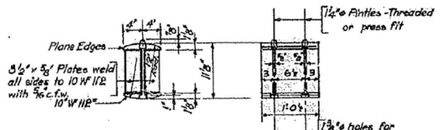

DETAIL OF BEARING AT ABUTMENTS & PIER 1

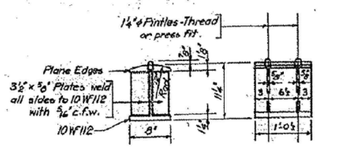

DETAIL OF BEARING AT PIER 2

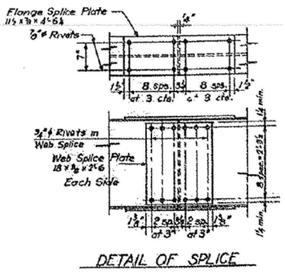

DETAIL OF SPLICE

Note: All holes to be reamed with all parts assembled to grade and all parts match marked.
All rivets ¾"φ, Holes 13/16" except as noted.

ELEVATIONS – TOPS OF BEAMS

Beam	North Structure ℄ Brg. West Abut.	℄ Splice #1	℄ Splice #2	℄ Brg. East Abut.	South Structure ℄ Brg. West Abut.	℄ Splice #1	℄ Splice #2	℄ Brg. East Abut.
1	754.86	754.73	754.66	754.52	754.81	754.68	754.53	754.54
2	754.94	754.81	754.74	754.59	754.89	754.70	754.60	754.40
3	755.01	754.87	754.79	754.64	754.98	754.76	754.68	754.46
4	755.01	754.86	754.78	754.63	754.95	754.75	754.64	754.53
5	754.93	754.78	754.70	754.54	754.87	754.66	754.55	754.33
6	754.84	754.68	754.60	754.45	754.75	754.54	754.42	754.20
7					754.63	754.41	754.30	754.07
8					754.51	754.29	754.17	753.95
9					754.44	754.24	754.12	753.91

"A" DIMENSIONS

Beam	North Structure West Abut.	East Abut.	South Structure West Abut.	East Abut.
1	5¼	4½	7	7⅝
2	4½	4 5/16	7⅞	8 7/16
3	5	5 9/16	8 11/16	9
4	5	5 5/16	8 9/16	8¾
5	4 1/16	4⅛	7⅝	7⅝
6	3	3	6 5/16	6 5/16
7			4¾	4 3/16
8			3 5/16	3 3/16
9			2½	2½

DESIGNED	E. L.
CHECKED	M. B.
DRAWN	S.F. Mularz
CHECKED	R.R.

EXAMINED
ENGINEER OF BRIDGES AND TRAFFIC STRUCTURES
PASSED
ENGINEER OF DESIGN
APPROVED
CHIEF HIGHWAY ENGINEER

STRUCTURAL STEEL DETAILS
F.A.I. ROUTE 74 - SECTION 90-14VB
F.A.I. ROUTE 74 OVER PENNA RAILROAD
STATION 550-24.84
TAZEWELL COUNTY
WARREN AND VAN PRAAG, INC.
CONSULTING ENGINEERS - DECATUR, ILLINOIS

6 OF 10

FOR INFORMATION ONLY

benesch engineers · scientists · planners
Alfred Benesch & Company
205 North Michigan Avenue, Suite 2400
Chicago, Illinois 60601
312-565-0450 Job No. 10056

FILE NAME = xxxxxxx_68620_17_exist6.dgn	USER NAME = mbecker	DESIGNED - MFB	REVISED -
		CHECKED - MRB	REVISED -
	PLOT SCALE =	DRAWN - MFB	REVISED -
	PLOT DATE = 7/16/2012	CHECKED - MRB	REVISED -

STATE OF ILLINOIS
DEPARTMENT OF TRANSPORTATION

EXISTING PLANS 6 OF 11
STRUCTURE NO. 090-0014 / 0015 REMOVAL
SHEET NO. SR17 OF SR22 SHEETS

F.A.I. RTE.	SECTION	COUNTY	TOTAL SHEETS	SHEET NO.
74	90-(14R;(14HB-4,14,14HVB)BR)	TAZEWELL	2433	2085

CONTRACT NO. 68620
ILLINOIS FED. AID PROJECT

7/16/2012 7:45:53 AM X:\10000S\10056\Engineering_Documents_Phase_II\174overRRV\Final\xxxxxxx_68620_17_exist6.dgn

STATE OF ILLINOIS
DEPARTMENT OF PUBLIC WORKS & BUILDINGS
DIVISION OF HIGHWAYS

ROUTE NO.	SEC.	COUNTY	TOTAL SHEETS	SHEET NO.
FAI 74	90-14HB-3 / 14HB-6 / 14VB	TAZEWELL	19	17

FED. ROAD DIST. NO. 7 ILLINOIS FED. ROAD

ROUTE NO.	SEC.	COUNTY	TOTAL SHEETS	SHEET NO.
FAI 74	90-14HB-3 / 14HB-4 / 14VB	TAZEWELL	89	46

FED. ROAD DIST. NO. 7 ILLINOIS

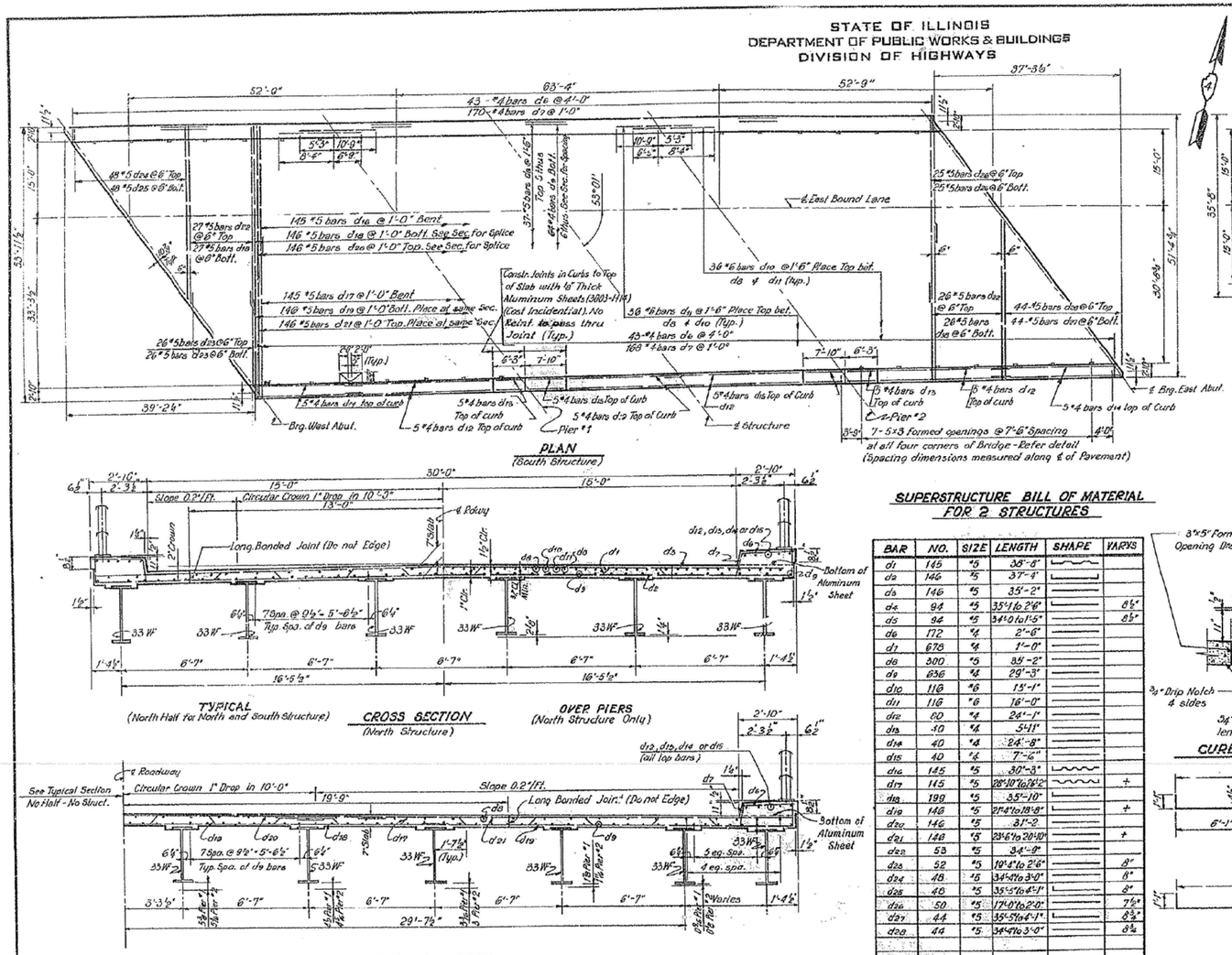

PLAN
(South Structure)

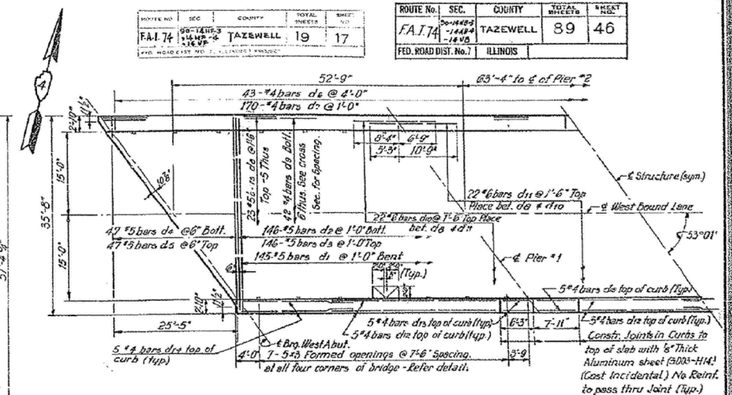

HALF PLAN
(North Structure)

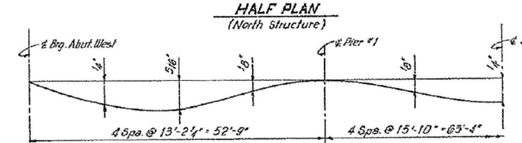

DEAD LOAD DEFLECTION DIAGRAM

TYPICAL
(North Half for North and South Structure)

CROSS SECTION
(North Structure)

OVER PIERS
(North Structure Only)

TYPICAL SECTION
(For South Half - South Structure)

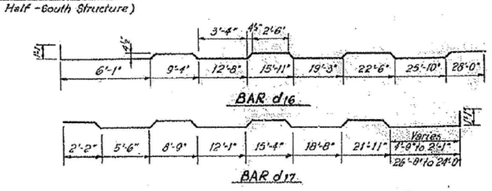

SUPERSTRUCTURE BILL OF MATERIAL
FOR 2 STRUCTURES

BAR	NO.	SIZE	LENGTH	SHAPE	VARYS
d1	145	#5	38'-8"		
d2	146	#5	37'-4"		
d3	146	#5	35'-2"		
d4	94	#5	35'-1 to 2'-6"		8½"
d5	94	#5	34'-0 to 1'-5"		8½"
d6	172	#4	2'-6"		
d7	672	#4	1'-0"		
d8	300	#5	35'-2"		
d9	636	#4	29'-3"		
d10	110	#6	15'-1"		
d11	110	#6	16'-0"		
d12	80	#4	24'-1"		
d13	40	#4	5'-11"		
d14	40	#4	24'-8"		
d15	40	#4	7'-6"		
d16	145	#5	30'-3"		
d17	145	#5	28'-10" to 28'-2"		+
d18	198	#5	35'-10"		
d19	146	#5	27'-4" to 18'-8"		+
d20	146	#5	31'-2"		
d21	146	#5	29'-6" to 20'-10"		+
d22	53	#5	34'-9"		
d23	52	#5	19'-4" to 2'-6"		8"
d24	48	#5	34'-9" to 3'-0"		8"
d25	48	#5	35'-5" to 4'-1"		8"
d26	50	#5	17'-0" to 2'-0"		7½"
d27	44	#5	35'-5" to 4'-1"		8¾"
d28	44	#5	34'-9" to 3'-0"		8¾"
Class X Concrete			Cu. Yds.	397.1	
Reinforcement Bars			Lbs.	86400	
Structural Steel			Lbs.	446,516	

NOTE:
+ Vary sets of 9 bars by 2"

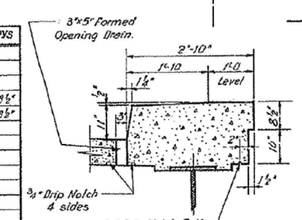

CURB & DRAIN DETAIL

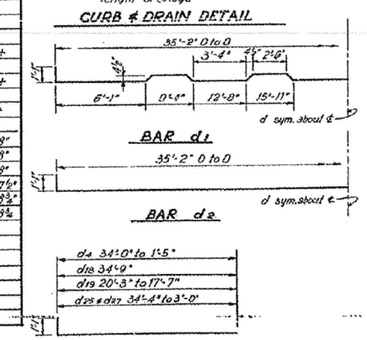

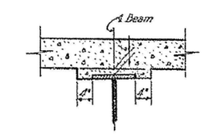

METHOD TO DETERMINE FILLET HEIGHTS - "t"

After all Structural Steel has been erected, elevations of the top flanges of the beams shall be taken at intervals not to exceed 10 ft. From these elevations subtract the increment of deflection for these points, determined from the D.L. deflection diagram. The elevations so attained subtracted from the theoretical grade elevations, minus floor thickness, equals the fillet heights above top of beam.

SUPERSTRUCTURE
F.A.I. ROUTE 74 SECTION 90-14VB

F.A.I. ROUTE 74 OVER PENNA RAILROAD
STATION 550+24.84
TAZEWELL COUNTY

WARREN AND VAN PRAAG, INC.
CONSULTING ENGINEERS - DECATUR, ILLINOIS

7 OF 10

DESIGNED	E.L.
CHECKED	S.N.
DRAWN	S.F.M.
CHECKED	E.L.

EXAMINED
ENGINEER OF BRIDGES AND TRAFFIC STRUCTURES
PASSED
ENGINEER OF DESIGN
APPROVED
CHIEF HIGHWAY ENGINEER

FOR INFORMATION ONLY

benesch
engineers · scientists · planners

Alfred Benesch & Company
205 North Michigan Avenue, Suite 2400
Chicago, Illinois 60601
312-565-0450 Job No. 10056

FILE NAME = xxxxxxx_68620_18_exist7.dgn	USER NAME = mbecker	DESIGNED - MFB	REVISED -
		CHECKED - MRB	REVISED -
	PLOT SCALE =	DRAWN - MFB	REVISED -
	PLOT DATE = 7/16/2012	CHECKED - MRB	REVISED -

STATE OF ILLINOIS
DEPARTMENT OF TRANSPORTATION

EXISTING PLANS 7 OF 11
STRUCTURE 090-0014 / 0015 REMOVAL
SHEET NO. SR18 OF SR22 SHEETS

F.A.I. RTE.	SECTION	COUNTY	TOTAL SHEETS	SHEET NO.
74	90-(14R;(14HB-4,14,14HVB)BR)	TAZEWELL	2433	2086

CONTRACT NO. 68620
ILLINOIS FED. AID PROJECT

7/16/2012 7:46:07 AM X:\100005\10056\Engineering_Documents_Phase_II\174overRR\Final\xxxxxxx_68620_18_exist7.dgn

STATE OF ILLINOIS
DEPARTMENT OF PUBLIC WORKS & BUILDINGS
DIVISION OF HIGHWAYS

ROUTE No.	SEC.	COUNTY	TOTAL SHEETS	SHEET NO.
F.A.I. 74	90-14HB(14HB-4,14,14HVB)-14 VB	TAZEWELL	89	47
FED. ROAD DIST. No.		ILLINOIS		

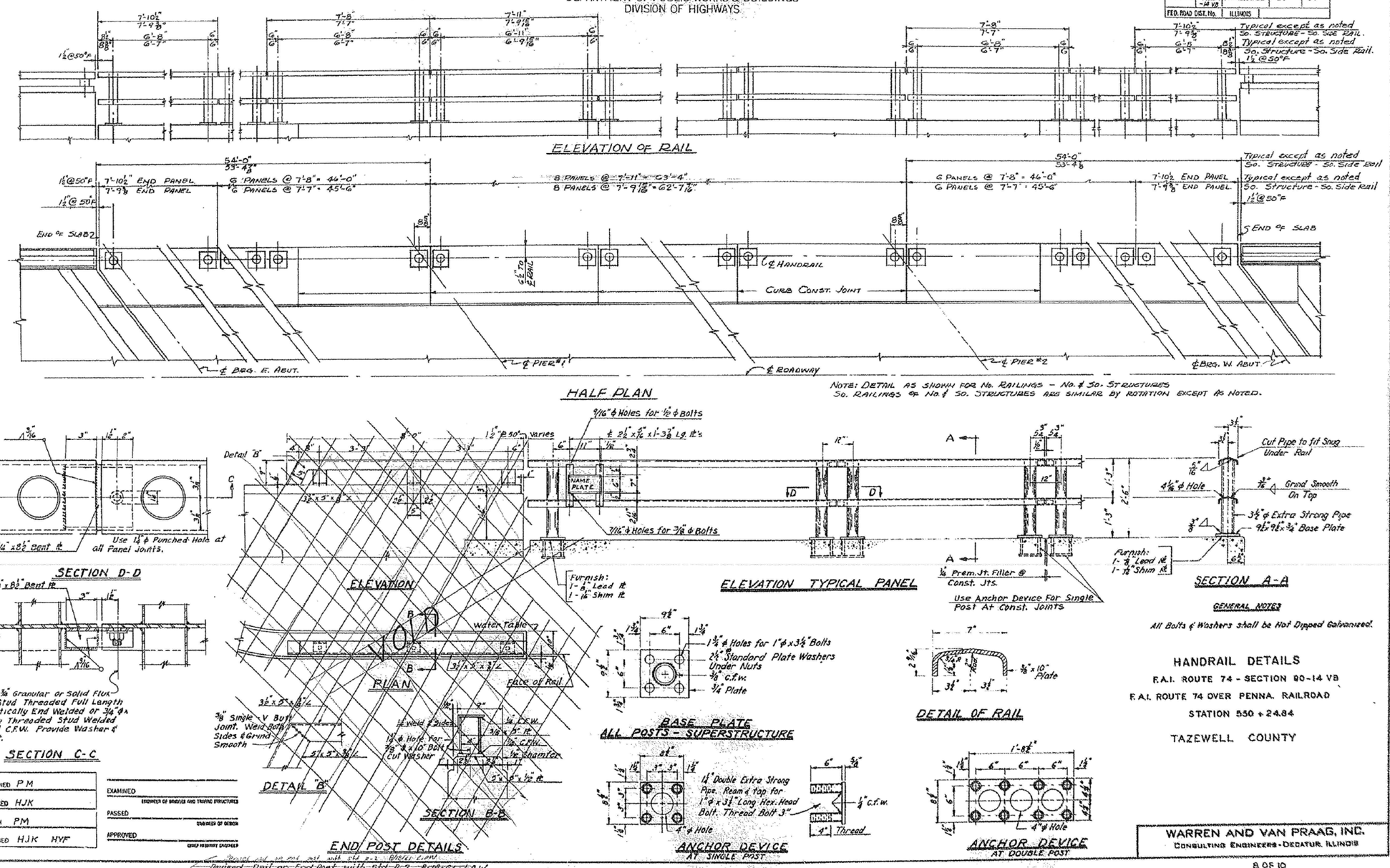

GENERAL NOTES

All Bolts & Washers shall be Hot Dipped Galvanized.

HANDRAIL DETAILS

F.A.I. ROUTE 74 - SECTION 90-14 VB

F.A.I. ROUTE 74 OVER PENNA. RAILROAD

STATION 550 + 24.84

TAZEWELL COUNTY

DESIGNED	PM
CHECKED	HJK
DRAWN	PM
CHECKED	HJK HYF

EXAMINED — ENGINEER OF BRIDGES AND TRAFFIC STRUCTURES

PASSED — ENGINEER OF DESIGN

APPROVED — CHIEF HIGHWAY ENGINEER

WARREN AND VAN PRAAG, INC.
CONSULTING ENGINEERS - DECATUR, ILLINOIS

8 OF 10

FOR INFORMATION ONLY

benesch
engineers · scientists · planners

Alfred Benesch & Company
205 North Michigan Avenue, Suite 2400
Chicago, Illinois 60601
312-565-0450 Job No. 10056

FILE NAME = xxxxxxx_68620_19_exist8.dgn	USER NAME = mbecker	DESIGNED - MFB	REVISED -
		CHECKED - MRB	REVISED -
	PLOT SCALE =	DRAWN - MFB	REVISED -
	PLOT DATE = 7/16/2012	CHECKED - MRB	REVISED -

STATE OF ILLINOIS
DEPARTMENT OF TRANSPORTATION

EXISTING PLANS 8 OF 11
STRUCTURE NO. 090-0014 / 0015 REMOVAL
SHEET NO. SR19 OF SR22 SHEETS

F.A.I. RTE.	SECTION	COUNTY	TOTAL SHEETS	SHEET NO.
74	90-(14R;(14HB-4,14,14HVB)BR)	TAZEWELL	2433	2087
		CONTRACT NO. 68620		
		ILLINOIS FED. AID PROJECT		

X:\10000S\10056\Engineering_Documents_Phase_II\74overRR\Final\xxxxxxx_68620_19_exist8.dgn 7:46:20 AM 7/16/2012

47-A

STATE OF ILLINOIS
DEPARTMENT OF PUBLIC WORKS & BUILDINGS
DIVISION OF HIGHWAYS

ROUTE NO.	SECTION	COUNTY	TOTAL SHEETS	SHEET NO.
F.A.I.				
F.A.S.				
FED. ROAD DIST. NO. 7	ILLINOIS	FED. AID PROJECT		

SHEET NO. 47-A
SHEETS

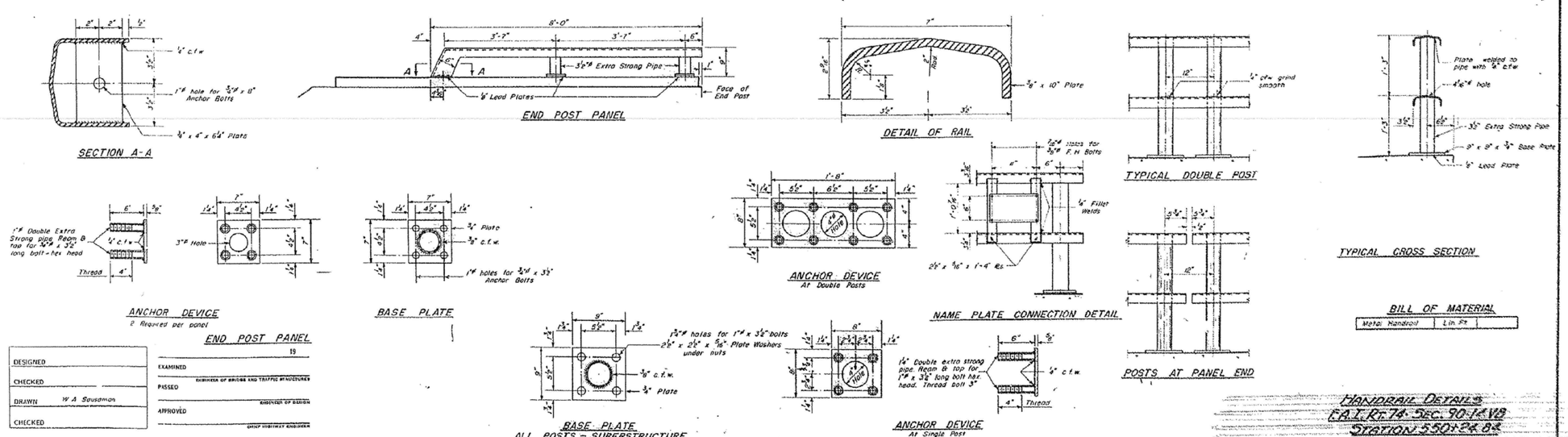

DESIGNED	
CHECKED	
DRAWN	W A Sausamon
CHECKED	

EXAMINED 19
ENGINEER OF BRIDGE AND TRAFFIC STRUCTURES
PASSED
ENGINEER OF DESIGN
APPROVED
CHIEF HIGHWAY ENGINEER

HANDRAIL DETAILS
F.A.I. RT. 74 SEC. 90-14 V8
STATION 550+24.83
TAZEWELL COUNTY

R-2

FOR INFORMATION ONLY

benesch
engineers · scientists · planners

Alfred Benesch & Company
205 North Michigan Avenue, Suite 2400
Chicago, Illinois 60601
312-565-0450 Job No. 10056

FILE NAME =	USER NAME = mbecker	DESIGNED - MFB	REVISED -
		CHECKED - MRB	REVISED -
xxxxxxx_68620_20_exist9.dgn	PLOT SCALE =	DRAWN - MFB	REVISED -
	PLOT DATE = 7/16/2012	CHECKED - MRB	REVISED -

STATE OF ILLINOIS
DEPARTMENT OF TRANSPORTATION

EXISTING PLANS 9 OF 11
STRUCTURE NO. 090-0014 / 0015 REMOVAL
SHEET NO. SR20 OF SR22 SHEETS

F.A.I. RTE.	SECTION	COUNTY	TOTAL SHEETS	SHEET NO.
74	90-(14R;(14HB-4,14,14HVB)BR)	TAZEWELL	2433	2088
		CONTRACT NO. 68620		
		ILLINOIS FED. AID PROJECT		

7/16/2012 7:46:34 AM X:\100005\10056\Engineering_Documents_Phase_II\I74overRR\Final\xxxxxxx_68620_20_exist9.dgn

STATE OF ILLINOIS
DEPARTMENT OF PUBLIC WORKS & BUILDINGS
DIVISION OF HIGHWAYS

ROUTE No.	SEC.	COUNTY	TOTAL SHEETS	SHEET No.
FAI 74	Re-Alignment Grade & Surface	TAZEWELL	89	48
FED. ROAD DIST. No. 7	ILLINOIS			

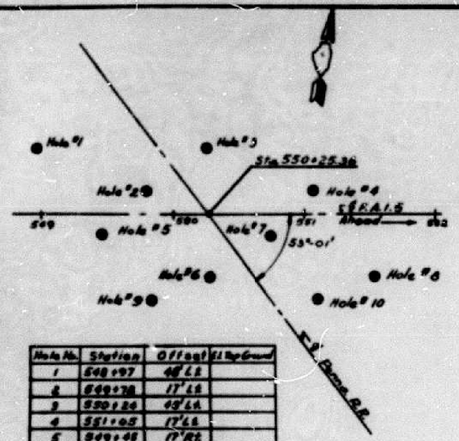

Hole No.	Station	Offset	El. Top Ground
1	548+97	48' LT	
2	549+78	17' LT	
3	550+24	49' LT	
4	551+05	17' LT	
5	549+48	17' RT	
6	550+27	49' RT	
7	550+73	17' RT	
8	551+54	48' RT	
9	549+02	65' RT	
10	551+09	45' RT	

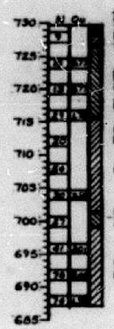

Topsoil
Brown silty clay with trace of organic matter. Stiff. Moist. H.R.B. : A-6
Mottled grayish brown silty clay. Stiff. Moist. H.R.B. : A-6
Ground water encountered at 11.00'.
Gray silty clay with trace of sand & gravel. Very stiff. Moist. H.R.B. : A-6
Hard. Moist. (from 21.00' to 28.53')
Gray silty clay with brownish black sedimentary peat. Stiff. Moist. H.R.B. : A-6
Gray silty clay with trace of sand & gravel. Hard. Moist. H.R.B. : A-6

B-1

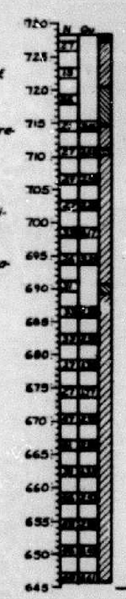

Topsoil
Mottled brownish gray silty clay with organic matter. Very stiff. Moist. H.R.B. : A-6
Stiff. Moist. (from 5.00' to 7.75')
Brown silty sand with trace of clay. Medium. Moist. H.R.B. : A-2-4
Gray silty clay with trace of sand & gravel. Very stiff. Moist. H.R.B. : A-6
Brown silty sandy gravel. Medium. Moist. H.R.B. : A-1-b
Gray silty clay with trace of sand & gravel. Very stiff. Moist. H.R.B. : A-6
Hard. Moist.
Ground water encountered at 30.00'
Gray clayey sand with trace of gravel. Dense. Moist. H.R.B. : A-2-6
Gray silty clay with trace of sand & gravel. Hard. Moist. H.R.B. : A-6
Very stiff. Moist. (from 49.00' to 57.00')
Hard. Moist. (from 57.00' to 62.50')

B-2

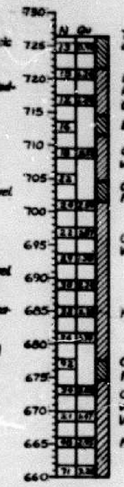

Topsoil-- Mottled brownish gray silty clay with organic matter. Stiff. Moist. H.R.B. : A-6
Mottled brownish gray silty clay. Stiff. Moist. H.R.B. : A-6
Ground water encountered at 9.00'.
Brown clayey sand. Medium. Wet. H.R.B. : A-6
Gray silty clay with trace of sand & gravel. Very stiff. Moist. H.R.B. : A-6
Gray clayey sandy gravel. Medium. Moist. H.R.B. : A-2-6
Gray silty clay with trace of sand & gravel. Very stiff. Moist. H.R.B. : A-6
Hard. Moist. (from 41.00' to 49.00')
Gray silty sand. Very dense. Moist. H.R.B. : A-2-6
Gray silty clay with trace of sand & gravel. Hard. Moist. H.R.B. : A-6
Very stiff. Moist.
Hard. Moist. (from 61.00' to 66.50')

B-3

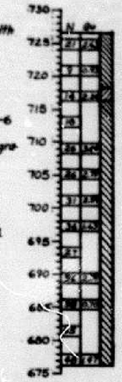

Mottled grayish brown silty clay with organic matter. Very stiff. Moist. H.R.B. : A-6
Ground water encountered at 8.35'.
Mottled grayish brown silty clay. Stiff. Moist. H.R.B. : A-6
Gray silty clay with trace of sand & gravel. Very stiff. Moist. H.R.B. : A-6
Very stiff. Moist.
Hard. Moist. (from 37.00' to 50.50')

B-4

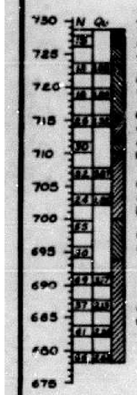

Topsoil
Black silty clay with organic matter. Stiff. Moist. H.R.B. : A-6
Mottled grayish brown silty clay. Stiff. Moist. H.R.B. : A-6
Gray silty clay with trace of sand & gravel. Stiff. Moist. H.R.B. : A-6
Gray silty clay with trace of sand & gravel mixed with brownish black sedimentary peat. Hard. Moist. H.R.B. : A-6 & Punk.
Gray silty clay with trace of sand & gravel. Hard. Moist. H.R.B. : A-6
Very stiff. Moist.
Gray sand with trace of silty clay. Dense. Moist. H.R.B. : A-3
Dense. Moist.
Gray silty clay with trace of sand & gravel. Hard. Moist. H.R.B. : A-6

B-5

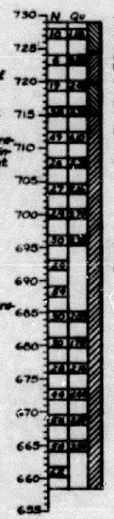

Topsoil- Black silty clay with organic matter. Stiff. Moist. H.R.B. : A-6
Mottled yellowish gray silty clay with trace of organic matter. Medium. Moist. H.R.B. : A-6
Brown silty clay with trace of sand & gravel. Stiff. Moist. H.R.B. : A-6
Gray silty clay with trace of sand & gravel. Hard. Moist. H.R.B. : A-6
Stiff. Moist. (From 21.00' to 33.00')
Hard. Stiff.
Stiff. Moist.
Hard. Moist. (From 41.00' to 53.00')
Stiff. Moist.
Hard. Moist. (From 57.00' to 70.50')

B-6

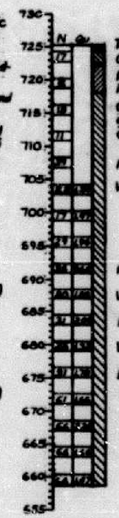

Topsoil
Gray silty clay. Medium. Moist. H.R.B. : A-6
Mottled brownish gray silty clay. Medium. Moist. H.R.B. : A-6
Gray silty clay with trace of sand & gravel. Stiff. Moist. H.R.B. : A-6
Ground water encountered at 9.00'.
Hard. Moist.
Very stiff. Moist. (from 21.00' to 30.50')
Hard. Moist.
Very stiff. Moist.
Hard. Moist.
Very stiff. Moist.
Hard. Moist. (From 49.00' to 66.50')

B-7

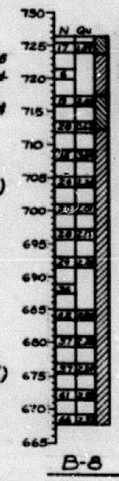

Topsoil-- Mottled brownish black silty clay with organic matter. Stiff. Moist. H.R.B. : A-6
Black silty clay with organic matter. Medium. Moist. H.R.B. : A-6
Brown silty clay with trace of sand & gravel. Stiff. Moist. H.R.B. : A-6
Gray silty clay with trace of sand & gravel. Hard. Moist. H.R.B. : A-6
Stiff. Moist. (From 21.00' to 37.00')
Hard. Moist. (From 37.00' to 58.50')

B-8

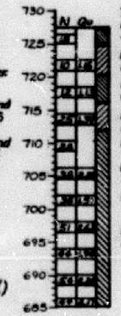

Topsoil-- Black silty clay with organic matter & trace of sand. Stiff. Moist. H.R.B. : A-6
Mottled yellowish gray silty clay. Stiff. Moist. H.R.B. : A-6
Mottled yellowish brown silty clay. Stiff. Moist. H.R.B. : A-6
Brown silty clay with trace of sand & gravel. Stiff. Moist. H.R.B. : A-6
Gray silty clay with trace of sand & gravel. Stiff. Moist. H.R.B. : A-6
Hard. Moist. (From 21.00' to 42.50')

B-9

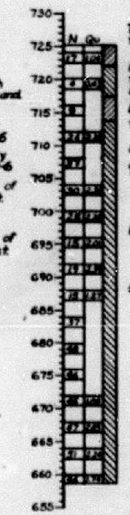

Topsoil-- Black silty clay with organic matter. Stiff. Moist. H.R.B. : A-6
Mottled brownish black silty clay with trace of organic matter. Soft. Moist. H.R.B. : A-6
Brown silty clay with trace of sand & gravel. Stiff. Moist. H.R.B. : A-6
Gray silty clay with trace of sand & gravel. Stiff. Moist. H.R.B. : A-6
Hard. Moist. (From 41.00' to 66.50')
Ground water encountered at 40.00'.

B-10

DESIGNED
CHECKED
DRAWN R. M.
CHECKED B. N.

SOIL BORING
F.A.I. ROUTE 74-SECTION 90-14VB
F.A.I. ROUTE 74 OVER PENNA RAILROAD
STATION 550+24.84
TAZEWELL COUNTY
WARREN AND VAN PRAAG, INC.
CONSULTING ENGINEERS - DECATUR, ILLINOIS

FOR INFORMATION ONLY

benesch
engineers · scientists · planners
Alfred Benesch & Company
205 North Michigan Avenue, Suite 2400
Chicago, Illinois 60601
312-565-0450 Job No. 10056

FILE NAME =	USER NAME = mbecker	DESIGNED - MFB	REVISED -	STATE OF ILLINOIS DEPARTMENT OF TRANSPORTATION	EXISTING PLANS 10 OF 11 STRUCTURE NO. 090-0014 / 0015 REMOVAL	F.A.I. RTE.	SECTION	COUNTY	TOTAL SHEETS	SHEET NO.
		CHECKED - MRB	REVISED -			74	90-[14R;(14HB-4,14,14HVB)BR]	TAZEWELL	2433	2089
xxxxxxx_68620_21_existl0.dgn	PLOT SCALE =	DRAWN - MFB	REVISED -					CONTRACT NO. 68620		
	PLOT DATE = 7/16/2012	CHECKED - MRB	REVISED -		SHEET NO. SR21 OF SR22 SHEETS		ILLINOIS	FED. AID PROJECT		

X:\10000S\10056\Engineering_Documents_Phase_II\74overRR\Final\xxxxxxx_68620_21_existl0.dgn 7:46:47 AM 7/16/2012

STATE OF ILLINOIS
DEPARTMENT OF PUBLIC WORKS & BUILDINGS
DIVISION OF HIGHWAYS

ROUTE NO.	SEC.	COUNTY	TOTAL SHEETS	SHEET NO.
F.A.I.-74	90-14HB-3 14-4 VF-4 14-4 P	TAZEWELL	19	18 of 19
FED. HIGHWAY BRIDGE PROJECT				

ROUTE No.	SEC.	COUNTY	TOTAL SHEETS	SHEET NO.
F.A.I. 74	90-14HB-3 14-4 VF-4 14-4 P	TAZEWELL	89	49
FED. ROAD DIST. No. 7		ILLINOIS		

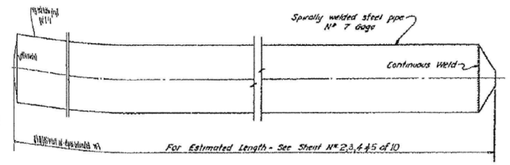

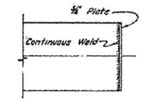

OPTIONAL FLAT END

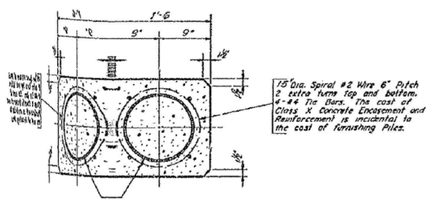

SECTION A-A

Note: Driving and bearing ends of pipe shall be cut square.

ALTERNATE B
DETAIL OF SPIRALLY WELDED STEEL SHELL
FOR CAST IN PLACE CONCRETE PILES

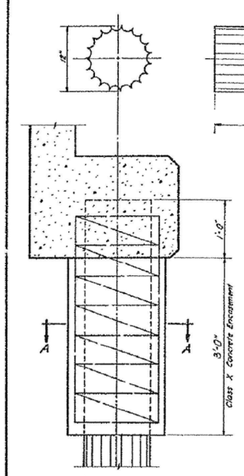

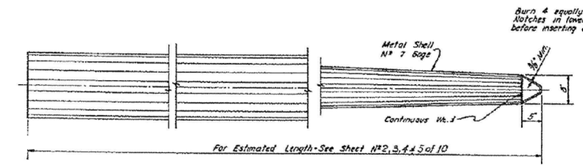

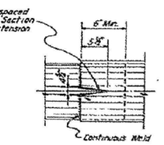

SPLICE TO BE
USED AS REQUIRED

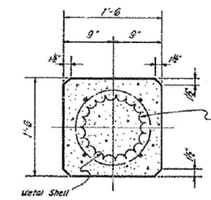

SECTION A-A

15" Dia. Spiral #2 Wire, 6" Pitch
2 extra turns top and bottom.
4-#4 Tie Bars. The cost of
Class X Concrete Encasement
and Reinforcement is incidental
to the cost of Furnishing Piles.

ALLOWABLE TAPERS

1 - Taper 1/12'-6" for 10' + 12'-6 Cylindrical Section Extension — 34'-0 Piers, 35'-0 Abuts.
2 - Taper 1/14'-0" for 17' + 12'-6 Cylindrical Section Extension — 27'-0 Piers, 28'-0 Abuts.
3 - Taper 1/17'-0" for 30' + 12'-0 Cylindrical Section Extension — 19'-0 Piers, 35'-0 Abuts.

ALTERNATE B
DETAIL OF METAL SHELL
FOR CAST IN PLACE CONCRETE PILES

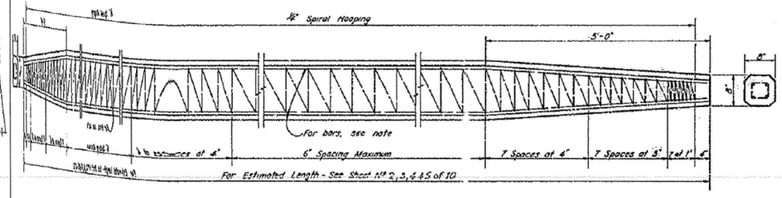

For 14" Piles 45' long or more use 8-#8 bars - 4 for the full length and 4 to the point of bend.
For 14" Piles under 45'-0" long use 4-#8 bars the full length.

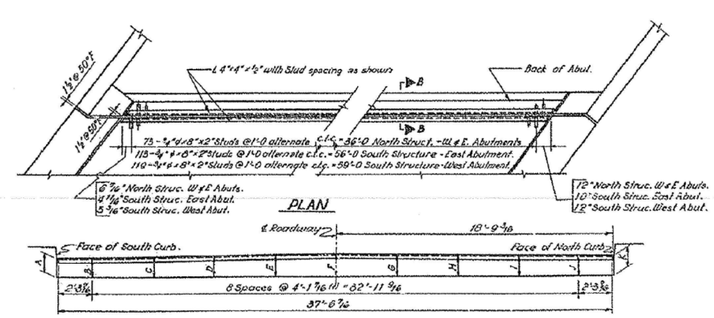

DIAGRAM OF EXPANSION GUARD ORDINATE
North Structure - East & West Abutments

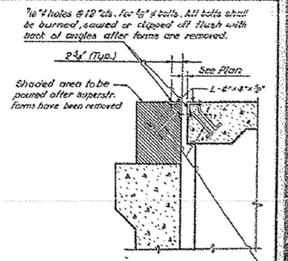

SECTION B-B

3/4" ϕ x 8" x 2" C.R. 1020 STL Stud or solid flux filled Stud - automatically end welded (Alternate at 1'-0" c/s)

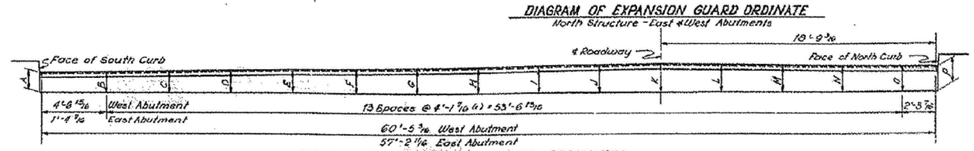

DIAGRAM OF EXPANSION GUARD ORDINATES
South Structure - East & West Abutments

SOUTH STRUCTURE

	A	B	C	D	E	F	G	H	I	J	K	L	M	N	O	P
West Abut.	1'-4 5/8	1'-5 5/8	1'-6	1'-6 1/8	1'-7 5/8	1'-9 1/8	3/8	1'-9 1/8	1'-10 1/8	1'-10 3/8	1'-10 3/8	1'-10 3/8	1'-10 3/8	1'-9 3/8	1'-9 1/8	1'-9
East Abut.	1'-4 7/8	1'-4 7/8	1'-5 3/8	1'-6 3/8	1'-7 1/8	1'-8	1'-8 3/8	1'-9 5/8	1'-10 1/8	1'-10 3/8	1'-11	1'-11	1'-10 3/8	1'-10 3/8	1'-9 3/8	1'-9 3/8

NORTH STRUCTURE

	A	B	C	D	E	F	G	H	I	J	K
West Abut.	1'-5 1/2	1'-5 3/8	1'-5 3/8	1'-6	1'-6 1/8	1'-6 3/8	1'-6	1'-5 5/8	1'-5 3/8	1'-4 7/8	1'-4 5/8
East Abut.	1'-4 5/8	1'-5	1'-5 1/8	1'-5 3/8	1'-5 3/8	1'-5 7/8	1'-6	1'-6 3/8	1'-6 3/8	1'-5 3/8	1'-5 3/8

PILE DETAIL & EXPANSION GUARD
F.A.I. ROUTE 74 & SECTION 90-14VB

F.A.I. ROUTE 74 OVER PENNA RAILROAD
STATION 550+24.84
TAZEWELL COUNTY

WARREN AND VAN PRAAG, INC.
CONSULTING ENGINEERS - DECATUR, ILLINOIS

10 OF 10

FOR INFORMATION ONLY

benesch
engineers · scientists · planners

Alfred Benesch & Company
205 North Michigan Avenue, Suite 2400
Chicago, Illinois 60601
312-565-0450 Job No. 10056

FILE NAME =	USER NAME = mbecker	DESIGNED - MFB	REVISED -
		CHECKED - MRB	REVISED -
xxxxxxx_68620_22_existll.dgn	PLOT SCALE =	DRAWN - MFB	REVISED -
	PLOT DATE = 7/16/2012	CHECKED - MRB	REVISED -

STATE OF ILLINOIS
DEPARTMENT OF TRANSPORTATION

EXISTING PLANS 11 OF 11
STRUCTURE NO. 090-0014 / 0015 REMOVAL
SHEET NO. SR22 OF SR22 SHEETS

F.A.I. RTE.	SECTION	COUNTY	TOTAL SHEETS	SHEET NO.
74	90-(14R;(14HB-4,14,14HVB)BR)	TAZEWELL	2433	2090
		CONTRACT NO. 68620		
		ILLINOIS FED. AID PROJECT		

X:\100005\10056\Engineering_Documents_Phase_II\74overRR\Final\xxxxxxx_68620_22_existll.dgn 7:46:57 AM 7/16/2012

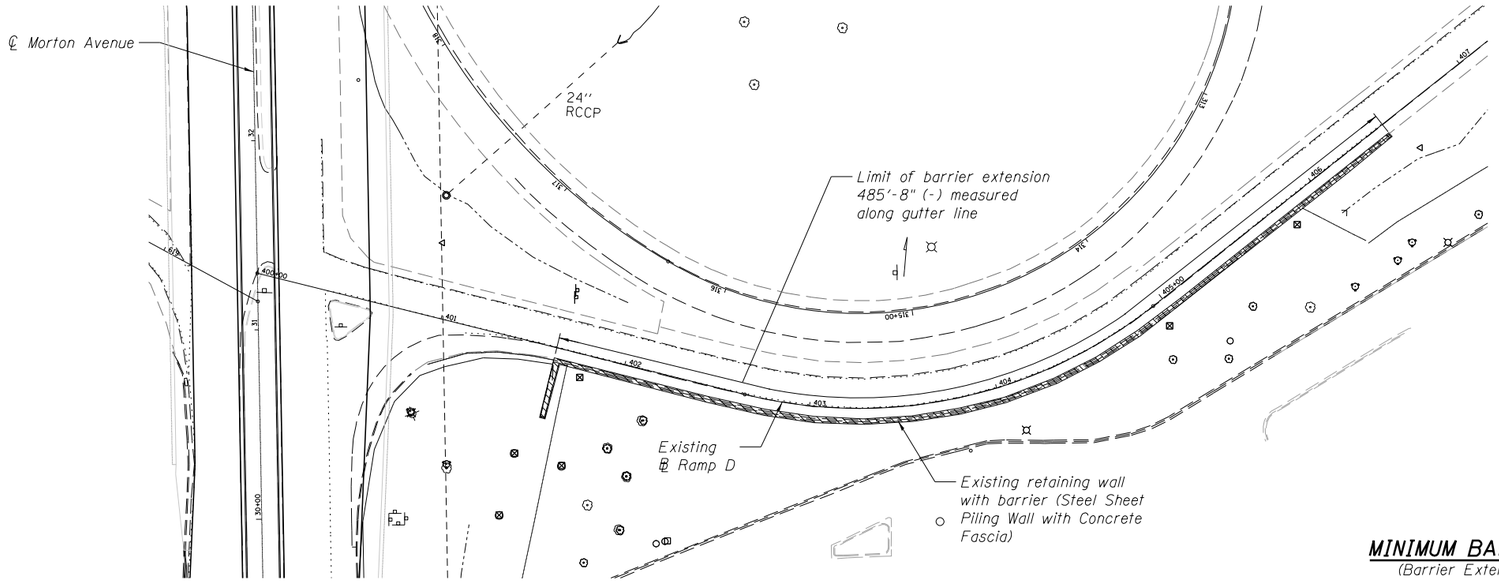

PLAN

TOTAL BILL OF MATERIAL

ITEM	UNIT	SUPER	SUB	TOTAL
Concrete Superstructure	Cu. Yd.	6.0		6.0
Reinforcement Bars, Epoxy Coated	Pound	1,040		1,040

INDEX OF SHEETS

SH1 General Plan and Elevation
SH2 Ramp D Retaining Wall Existing Plans 1 of 3
SH3 Ramp D Retaining Wall Existing Plans 2 of 3
SH4 Ramp D Retaining Wall Existing Plans 3 of 3

SCOPE OF WORK

1. Increase height of barrier.

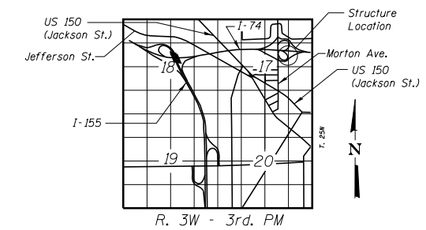

LOCATION SKETCH

MINIMUM BAR LAP

(Barrier Extension)
#4 bar = 2'-0"

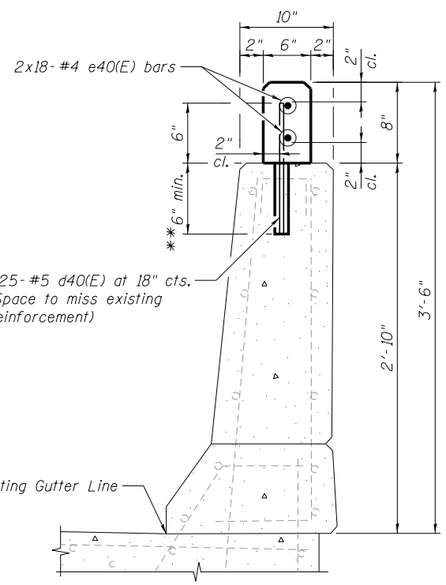

DETAIL A

* Core and set #5 d40(E) bars according to Article 509.06 of the Standard Specifications. Cored holes shall be roughened or scored per manufacturer's recommendations. Cost to be included in Reinforcement Bars, Epoxy Coated.

** Contractor to increase depth as required by the adhesive manufacturer at no extra cost to the Department.

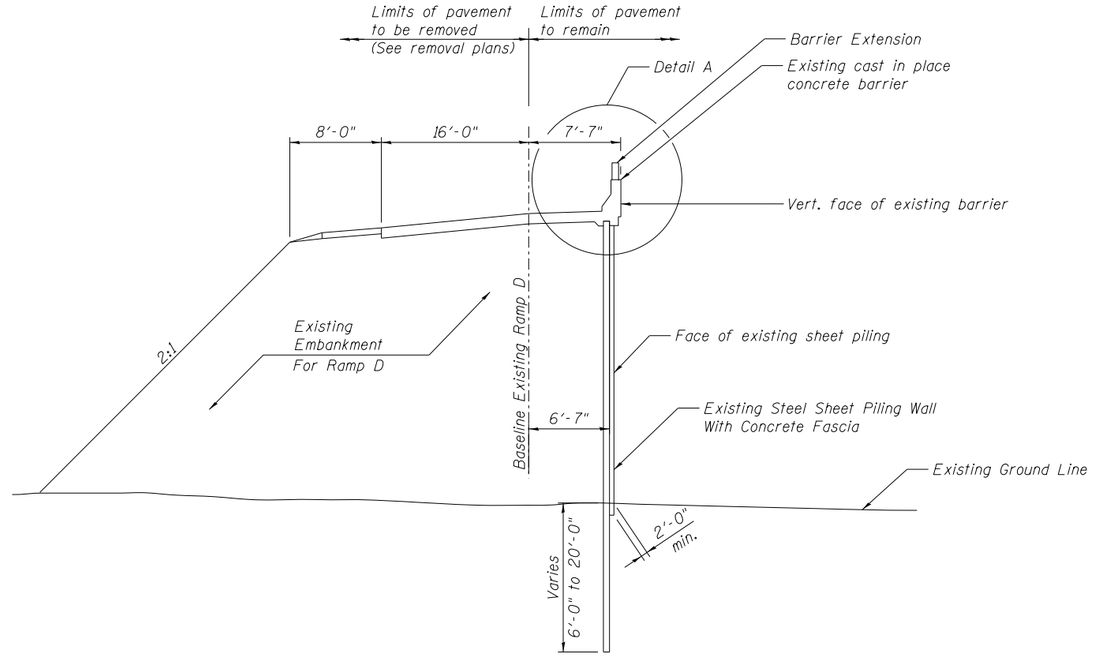

TYPICAL SECTION

REINFORCEMENT BILL OF MATERIAL

Bar	No.	Size	Length	Shape
d40(E)	325	#5	**1'-0"	———
e40(E)	36	#4	29'-0"	———

Bars indicated thus 2x18- #4 etc. indicates 2 lines of bars with 18 lengths per line.

GENERAL NOTES:

1. Reinforcement bars designated (E) shall be epoxy coated.
2. The Contractor shall exercise care during drilling and grouting to ensure that the barrier's integrity will not be detrimentally impacted. The Contractor shall repair any damage(s) to the barrier caused by his operation as directed by the Engineer at no additional cost to the Department.
3. Plan dimensions and details relative to existing plans are subject to nominal construction variations. The contractor shall field verify existing dimensions and details affecting new construction and make necessary approved adjustments prior to construction or ordering of materials. Such variations shall not be cause for additional compensation for a change in scope of the work, however, the Contractor will be paid for the quantity actually furnished at the unit price bid for the work.

benesch
engineers · scientists · planners
Alfred Benesch & Company
205 North Michigan Avenue, Suite 2400
Chicago, Illinois 60601
312-565-0450 Job No. 10056

FILE NAME = XXXXXXX_68620_01_rtwlrm.dgn	USER NAME = mbecker	DESIGNED - DMS	REVISED -
		CHECKED - MRB	REVISED -
	PLOT SCALE =	DRAWN - PRT	REVISED -
	PLOT DATE = 7/17/2012	CHECKED - MRB	REVISED -

STATE OF ILLINOIS
DEPARTMENT OF TRANSPORTATION

GENERAL PLAN AND ELEVATION
RAMP D RETAINING WALL
SHEET NO. SH1 OF SH4 SHEETS

F.A.I. RTE.	SECTION	COUNTY	TOTAL SHEETS	SHEET NO.
74	90-[14R;(14HB-4,14,14HVB)BR]	TAZEWELL	2433	2091
		CONTRACT NO. 68620		
		ILLINOIS FED. AID PROJECT		

X:\10000S\10056\Engineering_Documents_Phase_II\I74overRR\Final\XXXXXXX_68620_01_rtwlrm.dgn
9:15:31 AM
7/17/2012

RTE.	SECTION	COUNTY	TOTAL SHEETS	SHEET NO.
FAI 74	*	TAZEWELL	280	75
STA.		TO STA.		
F.H.W.A. REG.		ILLINOIS		

*(90-15-1,15-1HB,15W)-1

CURVE 1-D
P.I. STA. 3 + 88.22
Δ = 52° 22' 24"
D = 22° 55' 06"
T = 122.94'
R = 250.00'
L = 228.52'
E = 28.59'
S.E. = 0.08'/'.
S.E. TRANSITION
STA. 1 + 53.28 TO STA. 3 + 21.28
STA. 4 + 37.80 TO STA. 6 + 50.95

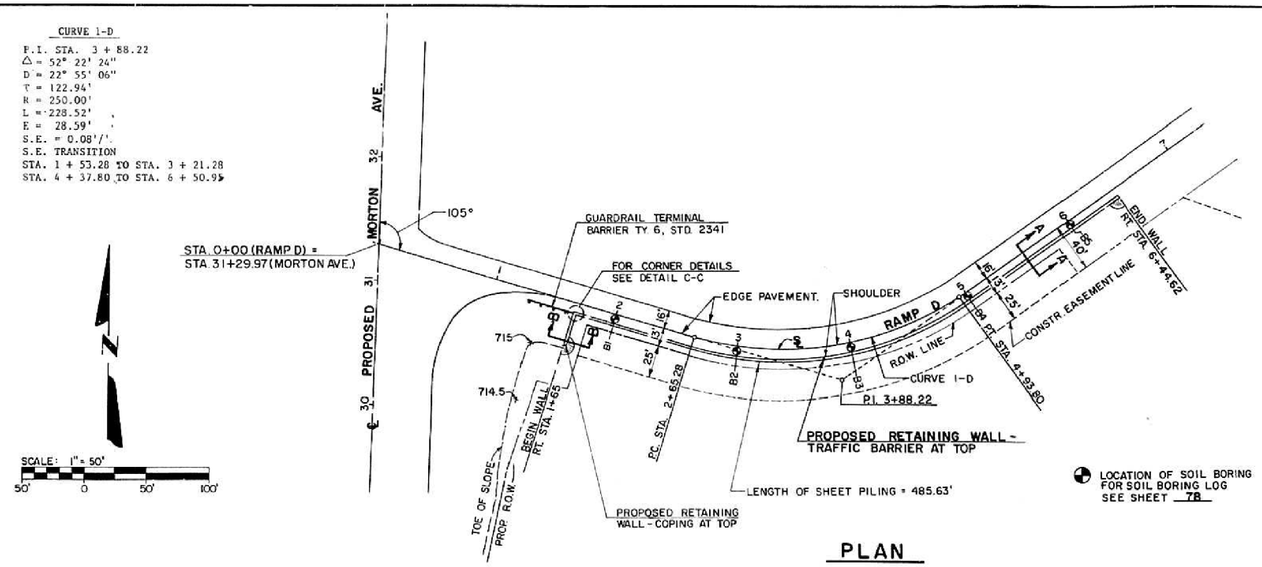

LOCATION OF SOIL BORING FOR SOIL BORING LOG SEE SHEET 78

PLAN

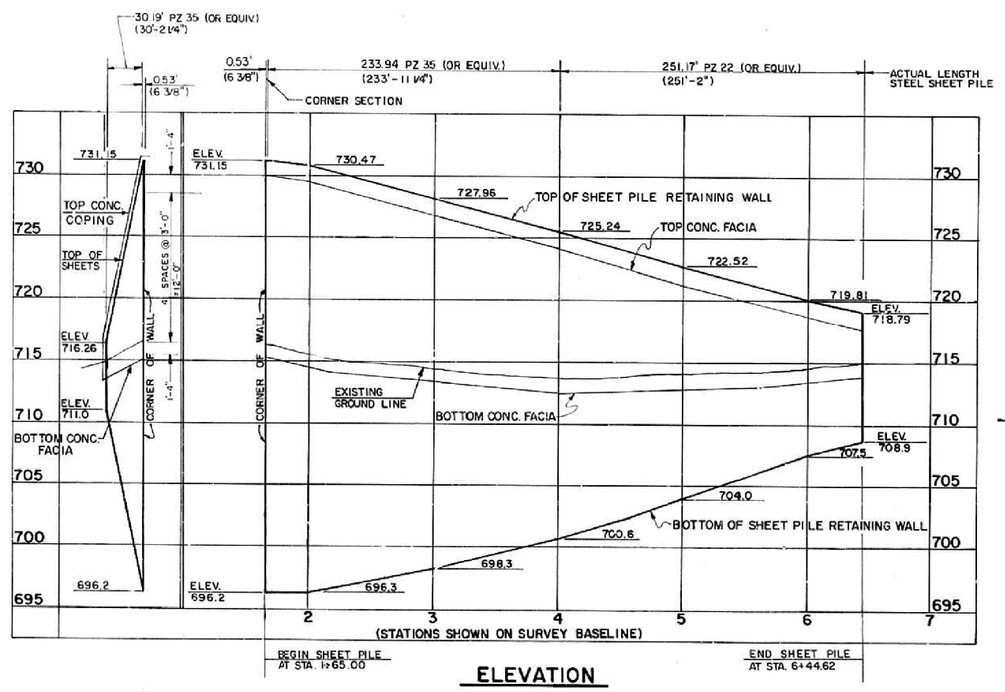

ELEVATION

GENERAL NOTES

1. All sheet piling shall be a A328 steel hot rolled ball and socket interlocks - PZ35, PZ22 or equivalent
2. The embankment for Ramp D shall be constructed first with a 1.5:1 slope as shown in the cross section.
3. After waiting 25 days from completion of the embankment, the steel sheet pile shall be driven.
4. Fifty days from completion of the embankment, the embankment shall be removed from the outside of the sheet piling.
5. Flux filled headed studs conforming to Article 710.38 shall be automatically end welded to the face of the sheet pile as shown.
6. The concrete facia shall be cast-in-place using class x concrete.
7. Reinforcement bars designated (E) shall be epoxy coated.
8. Reinforcement bars shall conform to the requirements of AASHTO M31, M42 or M53 Grade 60.

BILL OF MATERIAL - BARRIER WALL

BAR	NO.	SIZE	LENGTH	SHAPE
f (E)	376	#4	24'-0"	
f1 (E)	34	#5	29'-0"	
f2 (E)	24	#8	35'-0"	
f3 (E)	144	#4	19'-0"	
g (E)	390	#5	4'-0"	
g1 (E)	486	#4	4'-1"	
g2 (E)	530	#5	4'-4"	
g3 (E)	647	#5	4'-3"	
g4 (E)	486	#4	3'-8"	
g5 (E)	530	#5	3'-7"	
CLASS X CONCRETE (BARRIERS)			Cu. Yd.	242.7
REINFORCEMENT BARS (EPXY. CTD.)			Pound	22,933
EARTH EXCAVATION			Cu. Yd.	1,465

BILL OF MATERIAL - FACIA

BAR	NO.	SIZE	LENGTH	SHAPE
h (E)	461	#4	19'-9"	
V (E)	36	#4	14'-9"	
V1 (E)	57	#4	12'-6"	
V2 (E)	53	#4	7'-0"	
V3 (E)	32	#4	4'-9"	
h1 (E)	12	#4	10'-5"	
u (E)	11	#4	7'-3"	
u1 (E)	21	#4	7'-0"	
CLASS X CONCRETE (SPECIAL)			Cu. Yd.	257.0
STEEL SHEET PILING (SPECIAL)			Sq. Ft.	12,078
REINFORCEMENT BARS (EPXY. CTD.)			Pound	7,538

NOTE: Cost of Stud Shear Connectors is included in the cost of Steel Sheet Piling.
Total No. = 567

DESIGN STRESSES
f'c = 3500 p.s.i. (FACIA)
fy = 38,500 p.s.i. (SHEET PILING)
fy = 36,000 p.s.i. (STRUCT. STEEL)
fy = 60,000 p.s.i. (REINF. STEEL)

DAVID L. MAURER
SE. NO. 3921
EXP. DATE 11/92

FOR INFORMATION ONLY

RAMP 'D' RETAINING WALL
RT. STA. 1+65 TO 6+45

S.N. 090-8500

Rev 9-09-92

R.A.N. CONSULTANTS, INC.

FAI 74 (I-74) / FAU 6729 (MORTON AVE.)

benesch engineers · scientists · planners
Alfred Benesch & Company
205 North Michigan Avenue, Suite 2400
Chicago, Illinois 60601
312-565-0450 Job No. 10056

FILE NAME =	USER NAME = mbecker	DESIGNED - DMS	REVISED -
		CHECKED - MRB	REVISED -
XXXXXXX_68620.02_rtwlex1.dgn	PLOT SCALE =	DRAWN - PRT	REVISED -
	PLOT DATE = 7/16/2012	CHECKED - MRB	REVISED -

STATE OF ILLINOIS
DEPARTMENT OF TRANSPORTATION

RAMP D RETAINING WALL EXISTING PLANS 1 OF 3
RAMP D RETAINING WALL
SHEET NO. SH2 OF SH4 SHEETS

F.A.I. RTE.	SECTION	COUNTY	TOTAL SHEETS	SHEET NO.
74	90-[14R;(14HB-4,14,14HVB)BR]	TAZEWELL	2433	2092
		CONTRACT NO. 68620		
		ILLINOIS FED. AID PROJECT		

X:\10000S\10056\Engineering_Documents_Phase_II\I74overRR\Final\XXXXXXX_68620_02_rtwlex1.dgn 7:53:50 AM 7/16/2012

RTE.	SECTION	COUNTY	TOTAL SHEETS	SHEET NO.
FAI 74	*	TAZEWELL	280	76
STA.		TO STA.		
F.H.W.A. REG.		ILLINOIS		

*(90-15-1,15-1HB,15W)-1

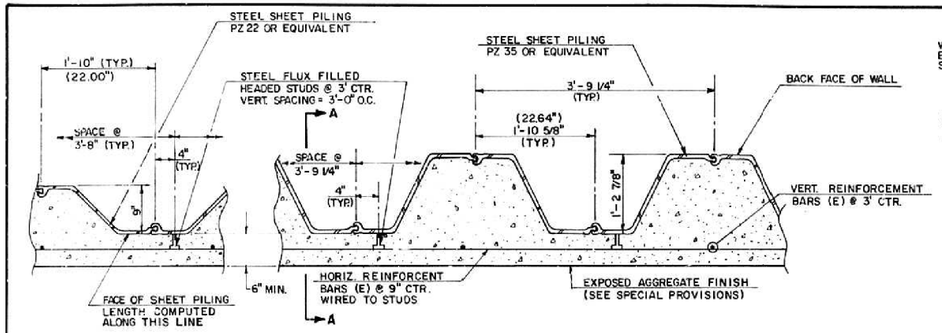

TYPICAL HORIZONTAL SECTION OF SHEET PILE WALL WITH CONCRETE FACIA

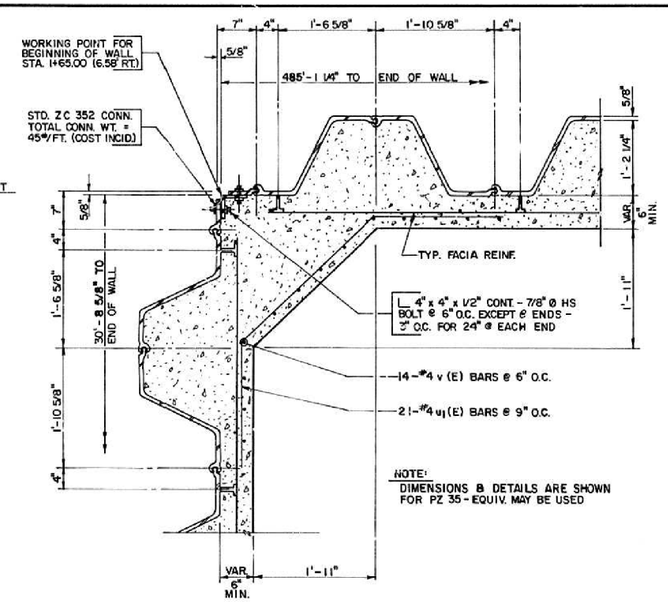

CORNER DETAIL OF SHEET PILE WALL DETAIL C-C

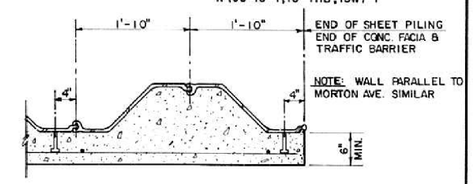

NOTE: WALL PARALLEL TO MORTON AVE. SIMILAR

END DETAIL OF SHEET PILE WALL

NOTE: DIMENSIONS & DETAILS ARE SHOWN FOR PZ 22 OR EQUIV. MAY BE USED

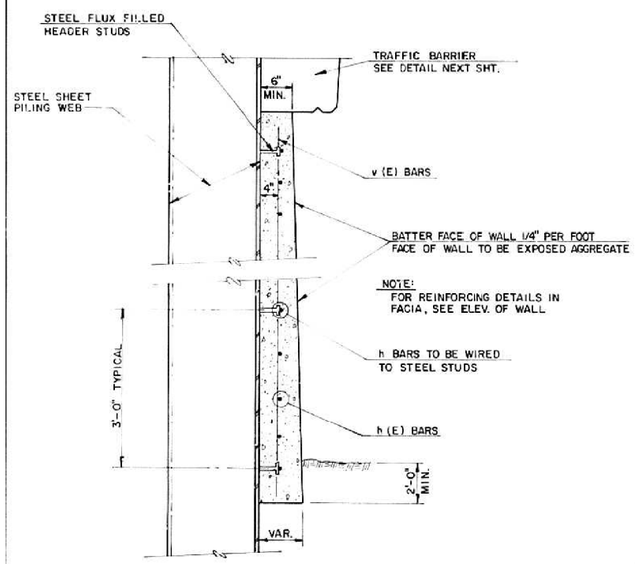

SECTION A-A

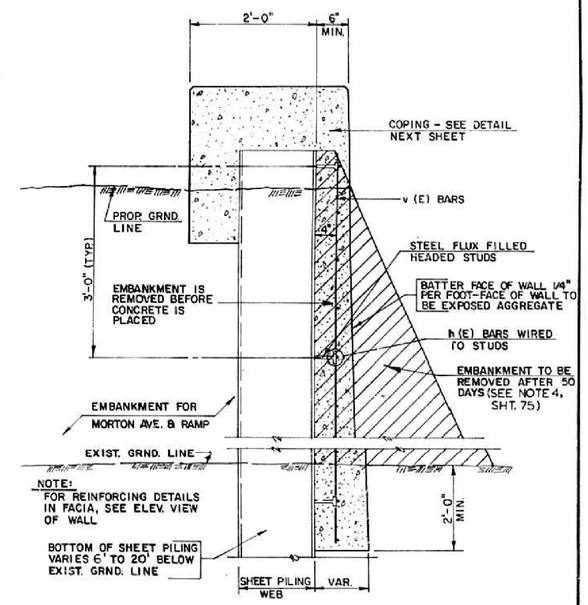

SECTION B-B

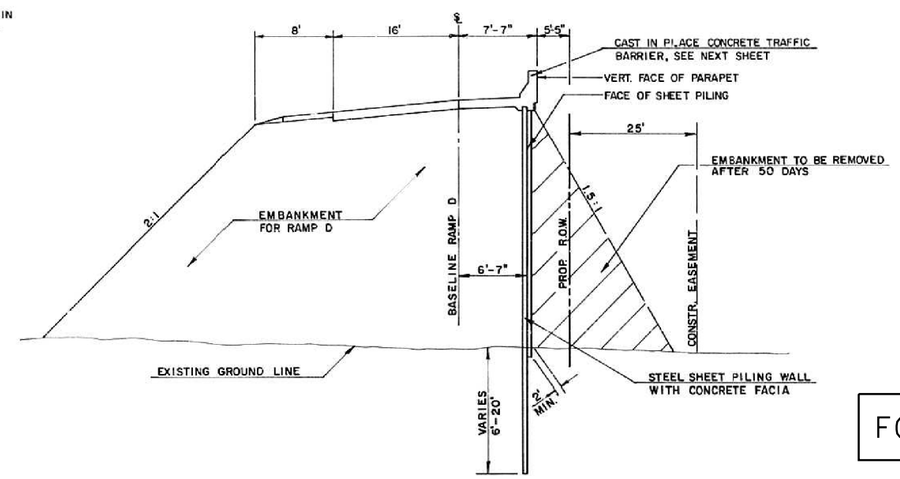

TYPICAL SECTION THRU EMBANKMENT

FOR INFORMATION ONLY

RAMP D
RETAINING WALL DETAILS
RT. STA. 1+65 TO 6+45

benesch engineers · scientists · planners
Alfred Benesch & Company
205 North Michigan Avenue, Suite 2400
Chicago, Illinois 60601
312-565-0450 Job No. 10056

FILE NAME = XXXXXXX_68620_03_rtwlex2.dgn	USER NAME = mbecker	DESIGNED - DMS	REVISED -
		CHECKED - MRB	REVISED -
	PLOT SCALE =	DRAWN - PRT	REVISED -
	PLOT DATE = 7/16/2012	CHECKED - MRB	REVISED -

STATE OF ILLINOIS
DEPARTMENT OF TRANSPORTATION

RAMP D RETAINING WALL EXISTING PLANS 2 OF 3
RAMP D RETAINING WALL
SHEET NO. SH3 OF SH4 SHEETS

F.A.I. RTE.	SECTION	COUNTY	TOTAL SHEETS	SHEET NO.
74	90-(14R;(14HB-4,14,14HVB)BR)	TAZEWELL	2433	2093
		CONTRACT NO. 68620		
		ILLINOIS FED. AID PROJECT		

X:\10000S\10056\Engineering_Documents_Phase_II\174overRR\Final\XXXXXXX_68620_03_rtwlex2.dgn 7:54:01 AM 7/16/2012

RTE.	SECTION	COUNTY	TOTAL SHEETS	SHEET NO.
FAI 74	*	TAZEWELL	280	77
STA.		TO STA.		
F.H.W.A. REG.		ILLINOIS		

*(90-15-1, 15-1 HB, 15 W)-1

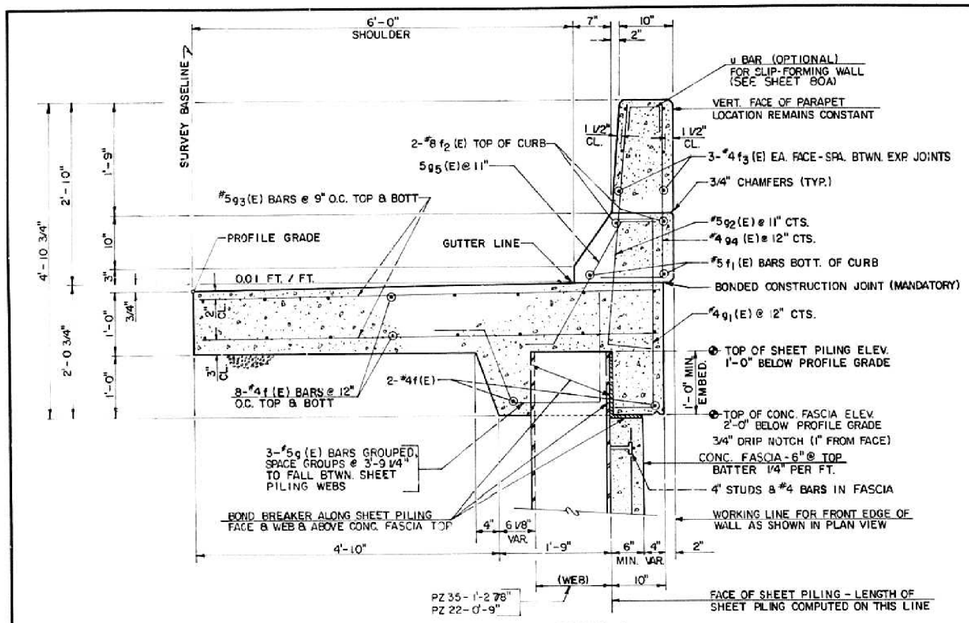

TRAFFIC BARRIER & WALL DETAIL

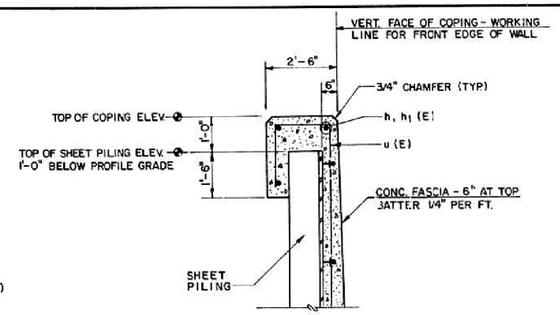

COPING DETAIL

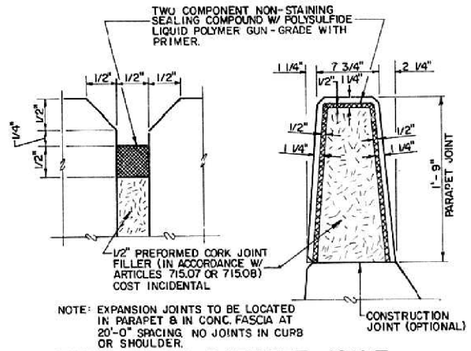

DETAILS OF PARAPET JOINT

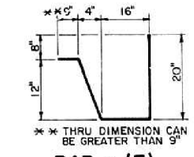

BAR g (E)

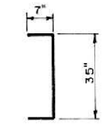

BAR g1 (E)

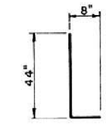

BAR g2 (E)

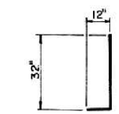

BAR g4 (E)

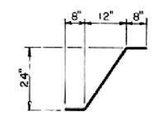

BAR g5 (E)

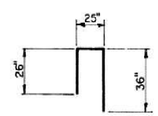

BAR u (E)

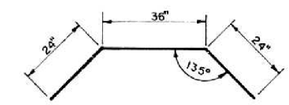

BAR u1 (E)

GENERAL NOTES

1. THE TRAFFIC BARRIER WALL SHALL BE CONSTRUCTED ENTIRELY OF CLASS X CONCRETE IN ACCORDANCE WITH THE APPLICABLE PORTIONS OF SECTION 504 OF THE STANDARD SPECIFICATIONS. (SEE SPECIAL PROVISIONS)
2. REINFORCEMENT BARS SHALL BE EPOXY COATED IN ACCORDANCE WITH SECTION 512 OF THE STANDARD SPECIFICATIONS.
3. THE TRAFFIC BARRIER WALL SHALL NOT BE CONSTRUCTED UNTIL AFTER THE EXCESS EMBANKMENT HAS BEEN REMOVED FROM OUTSIDE OF THE SHEET PILING.
4. THIS WORK SHALL BE PAID FOR AT THE CONTRACT UNIT PRICE PER CUBIC YARD FOR CLASS X CONCRETE (BARRIERS) AND PER POUND FOR REINFORCEMENT BARS EPOXY COATED.

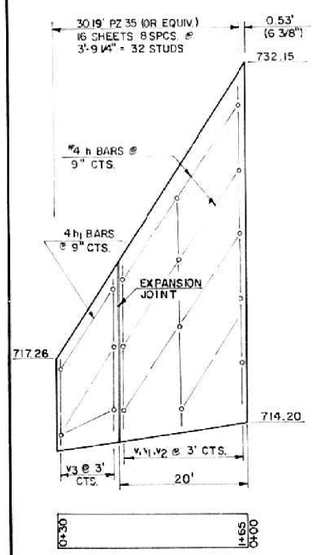

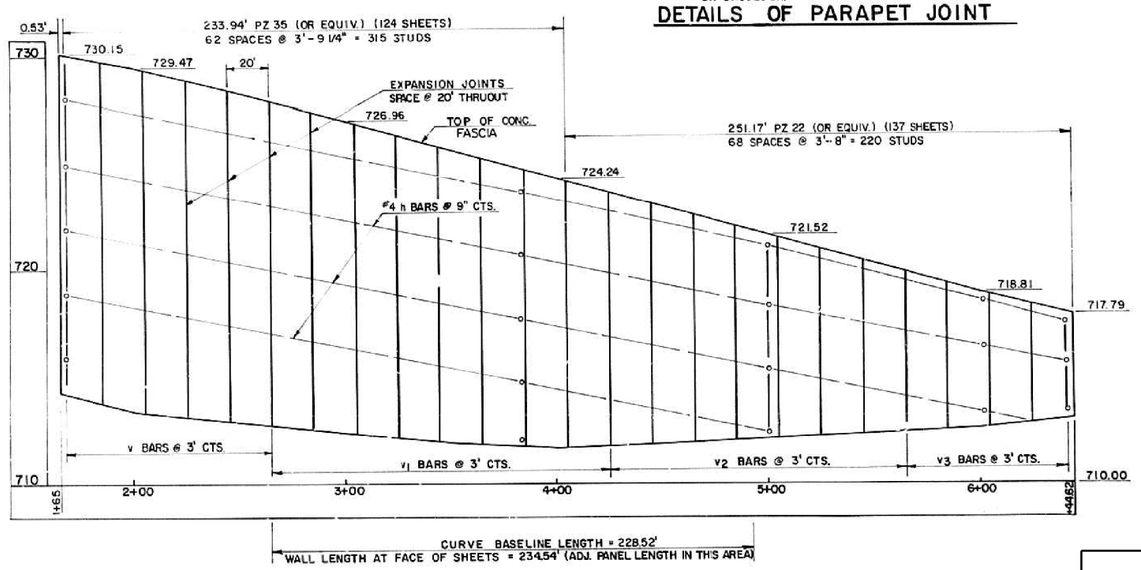

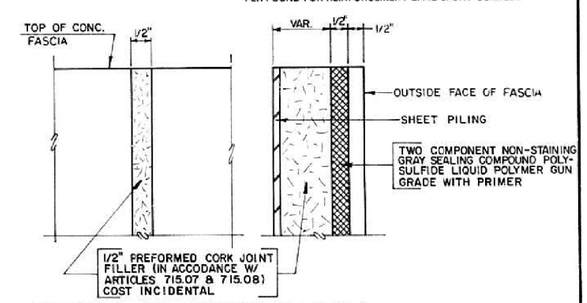

DETAILS OF CONCRETE FACIA AT EXPANSION JOINT

RAMP D
RETAINING WALL
TRAFFIC BARRIER

FOR INFORMATION ONLY

benesch
engineers · scientists · planners

Alfred Benesch & Company
205 North Michigan Avenue, Suite 2400
Chicago, Illinois 60601
312-565-0450 Job No. 10056

FILE NAME =	USER NAME = mbecker	DESIGNED - DMS	REVISED -
		CHECKED - MRB	REVISED -
XXXXXXX_68620_04_rtwlex3.dgn	PLOT SCALE =	DRAWN - PRT	REVISED -
	PLOT DATE = 7/16/2012	CHECKED - MRB	REVISED -

STATE OF ILLINOIS
DEPARTMENT OF TRANSPORTATION

RAMP D RETAINING WALL EXISTING PLANS 3 OF 3
RAMP D RETAINING WALL
SHEET NO. SH4 OF SH4 SHEETS

F.A.I. RTE.	SECTION	COUNTY	TOTAL SHEETS	SHEET NO.
74	90-(14R;14HB-4,14,14HVB)BR1	TAZEWELL	2433	2094
		CONTRACT NO. 68620		
		ILLINOIS FED. AID PROJECT		

X:\10000S\10056\Engineering_Documents_Phase_II\I74overRR\Final\XXXXXXX_68620_04_rtwlex3.dgn 7:54:11 AM 7/16/2012

SLOPE STEPS DETAIL

TYPICAL CROSS-SECTION EMBANKMENT
CONSTRUCTION ON SIDEHILL

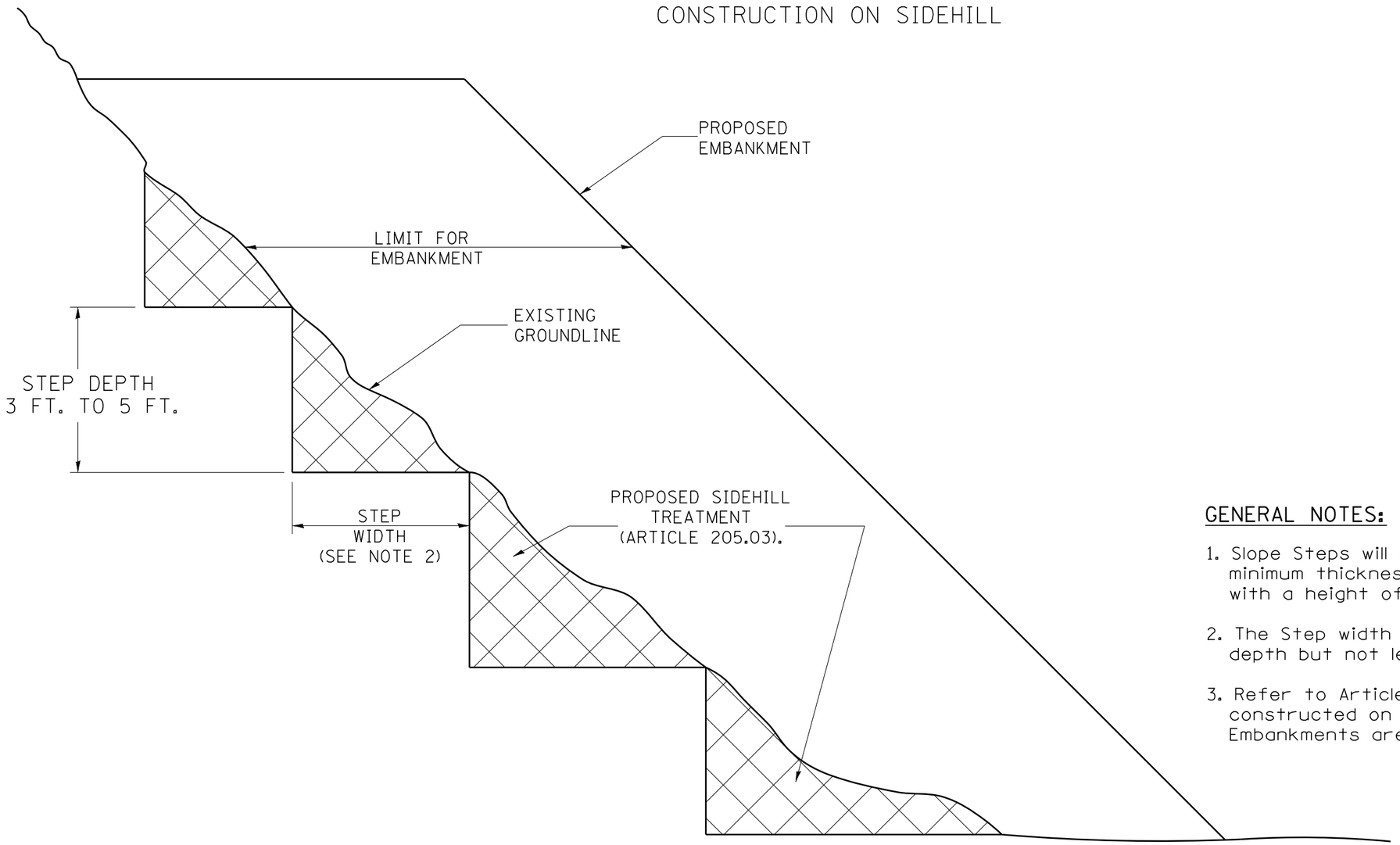

GENERAL NOTES:

1. Slope Steps will be required for all 12(300) minimum thickness "silver fills" and on a fills with a height of 10'(3.0m).
2. The Step width shall be twice the Step depth but not less than 6 feet.
3. Refer to Article 205.03 for Embankment to be constructed on Hillside or Slopes, or if existing Embankments are to be widened.

DESIGNER NOTE:

1. EACH PROJECT SHOULD BE REVIEWED INDEPENDENTLY FOR TREATMENT REQUIRED.
2. REFER TO THIS DETAIL WITH NOTE ON APPLICABLE TYPICAL SECTIONS.

REPLACEMENT MATERIAL:

STANDARD EMBANKMENT
(IN ACCORDANCE WITH
205 OF THE STANDARD SPECIFACATION).

All dimensions are in inches (millimeters) unless otherwise noted.

1-1-97	RENUM. L-5.03, NEW REVISION BOX, REVISED TITLE	T.P.
	BOX, REVISED GENERAL NOTES.	
10-16-06	REVISED TO 2007 SPEC.	M.A.

STATE OF ILLINOIS
DEPARTMENT OF TRANSPORTATION

SLOPE STEPS DETAIL

NOT TO SCALE

CADD STD. 205001-D4

F.A.I RTE.	SECTION	COUNTY	TOTAL SHEETS	SHEET NO.
•	90-[14R;(14HB-4,14,14HVB)BR]	TAZEWELL	2433	2095
		CONTRACT NO. 68620		
FED. ROAD DIST. NO.	ILLINOIS	FED. AID PROJECT		

DESIGNER NOTES:
1. SEE SOILS REPORT AND BUREAU OF MATERIALS FOR USAGE, LOCATIONS, AND SETTLEMENT RATES.
2. CONSIDER USE ON BRIDGE EMBANKMENT AND OTHER SETTLEMENT SENSITIVE FILLS.
3. THIS DRAWING ALLOWS FOR WOODBASE PLATE OPTION.

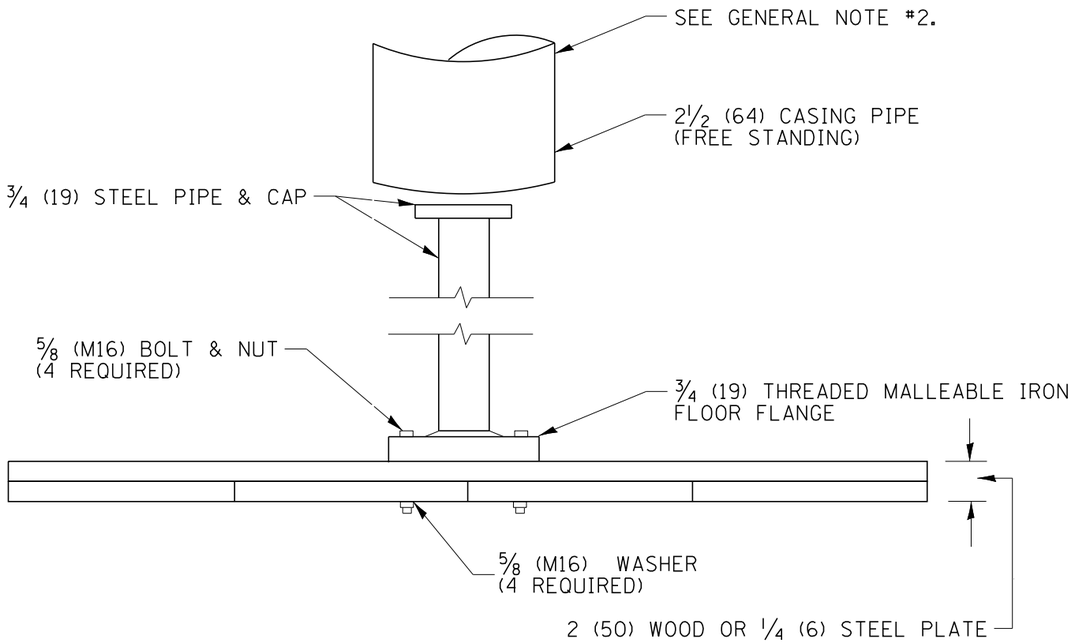

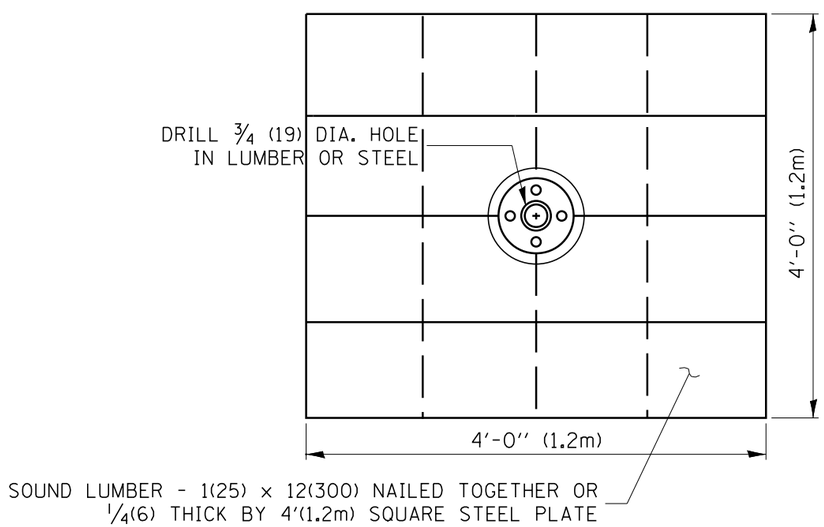

GENERAL NO ES:

1. Settlement Platform shall be in accordance with the appicable portions of Article 204.06 of the Standard Specifications.

2. Do Not install casing pipe until after one section of 3/4"(19 mm) has been covered with earth. The casing pipe should not rest on platform.

All dimensions are in inches (millimeters) unless otherwise noted.

1-1-97	RENUM. L-5.04, NEW REVISION BOX, REVISED NOTES.	T.P.	8-23-01	UPDATE FOR NEW SPEC.	M.A.
	REVISED TITLE BOX		10-16-06	REVISED TO 2007 SPEC.	M.A.
4-14-99	ADDED "CASING PIPE" REQUIREMENT	J.A.			
5-19-99	CORRECTIONS TO CASING PIPE	J.A.			

STATE OF ILLINOIS
DEPARTMENT OF TRANSPORTATION

SETTLEMENT PLATFORM

NOT TO SCALE

CADD STD. 205101-D4

F.A. RTE.	SECTION	COUNTY	TOTAL SHEETS	SHEET NO.
	90-[14R;(14HB-4,14,14HVB)BR]	TAZEWELL	2433	2096
		CONTRACT NO.		
FED. ROAD DIST. NO.	ILLINOIS	FED. AID PROJECT		

DESIGNER NOTES:
1. Designer to modify this detail Special Detail Sheet, as needed, for inclusion in plans.
2. Determine the required clear zone in order to select the berm slopes.
3. Include State Standard 280001.

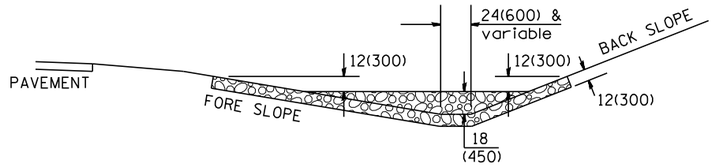

SECTION A - A

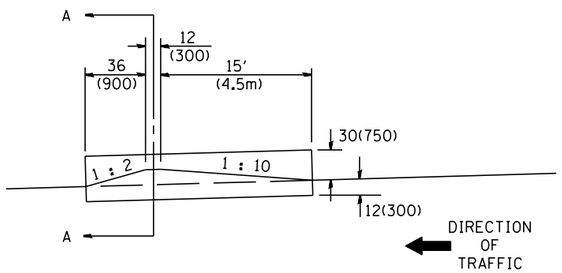

SIDE VIEW
(WITHIN CLEAR ZONE)

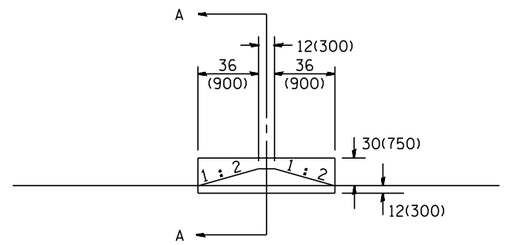

SIDE VIEW
(OUTSIDE OF CLEAR ZONE)

SIDE DITCH AGGREGATE DITCH CHECK

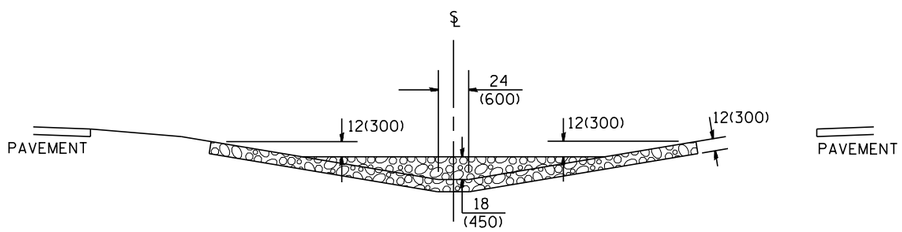

SECTION B - B

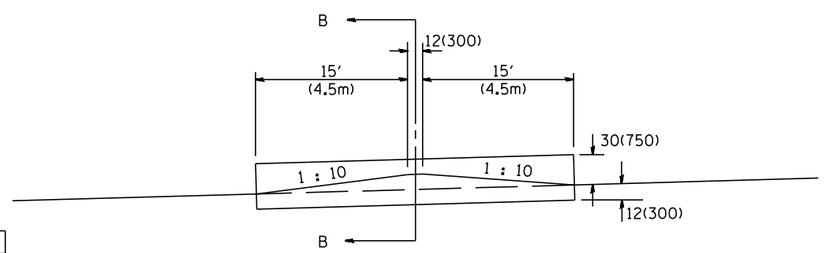

SIDE VIEW

MEDIAN AGGREGATE DITCH CHECK

NOTES:

1. FOR DITCH BOTTOM PROTECTED BY EXCELSIOR BLANKET, USE 400'(120m) SPACING.
   FOR SEEDED DITCH BOTTOM, USE 200'(60m) SPACING.
2. THIS WORK CONSISTS OF THE COMPLETE INSTALLTION OF EROSION CONTROL DITCH CHECK AT LOCATIONS AS SHOWN ON THE PLANS, OR AS DIRECTED BY THE ENGINEER. THE AGGREGATE GRADATION SHALL BE RR3 WITH A MINIMUM QUALITY OF CLASS B.

LOCATION				NUMBER OF DITCH CHECKS	FORE SLOPE	DITCH BOTTOM WIDTH	BACK SLOPE	BERM SLOPE
STATION	MEDIAN	SIDE DITCH LEFT	SIDE DITCH RIGHT					

ESTIMATE QUANTITIES

	FORE SLOPE	DITCH BOTTOM	BACK SLOPE	BERM SLOPE	AGGREGATE DITCH CHECK EROSION CONTROL METRIC TON(TON)
MEDIAN DITCH	1 : 6	24(600)	—	1 : 10	95(86)
SIDE DITCH	1 : 6	24(600)	1 : 4	1 : 10 & 1 : 2	50(45)
SIDE DITCH	1 : 6	24(600)	1 : 4	1 : 2 & 1 : 2	19(17)
SIDE DITCH	1 : 4	24(600)	1 : 3	1 : 10 & 1 : 2	18(16)
SIDE DITCH	1 : 4	24(600)	1 : 3	1 : 2 & 1 : 2	14(13)

All slope ratios are expressed as units of vertical displacement to units of horizontal displacement (V:H).

All dimensions are in inches (millimeters) unless otherwise noted.

QUANTITIES

CALC. BY: _____ DATE:
CHECKED BY: _____ DATE:

QUANTITY CALCULATIONS ARE ON FILE AT THE DISTRICT 4 OFFICE; BUREAU OF PROJECT IMPLEMENTATION; DOCUMENTATION SECTION

1-1-97	RENUM. A-12.04, NEW REVISION BOX, REVISED TITLE	T.P.
	BOX, ADDED QUANTITY CALCULATION BOX	
9-15-05	REVISED DESIGNER NOTE	M.A.
10-16-06	REVISED RR3 QUALITY & TO 2007 SPEC.	M.A.

STATE OF ILLINOIS
DEPARTMENT OF TRANSPORTATION

EROSION CONTROL AGGREGATE DITCH CHECK

NOT TO SCALE

CADD STD. 280101-D4

F.A.I RTE.	SECTION	COUNTY	TOTAL SHEETS	SHEET NO.
•	90-[14R;(14HB-4,14,14HVB)BR]	TAZEWELL	2433	2097
		CONTRACT NO. 68620		
FED. ROAD DIST. NO.	ILLINOIS	FED. AID PROJECT		

CASE 1
(DITCH)

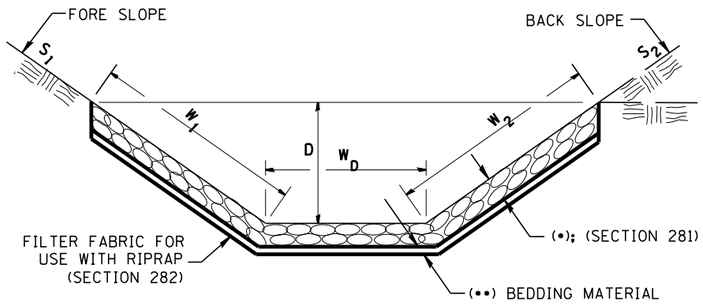

(✱)				
LOCATION	WIDTH (1)	LENGTH	RIPRAP	FABRIC
STA TO STA	lin ft (m)	lin ft (m)	tons (m tons)	sq yds (m^2)
TOTAL				

(1) WIDTH = $W_1 + W_2 + W_D$

CASE 2
(CULVERT & SLOPE)

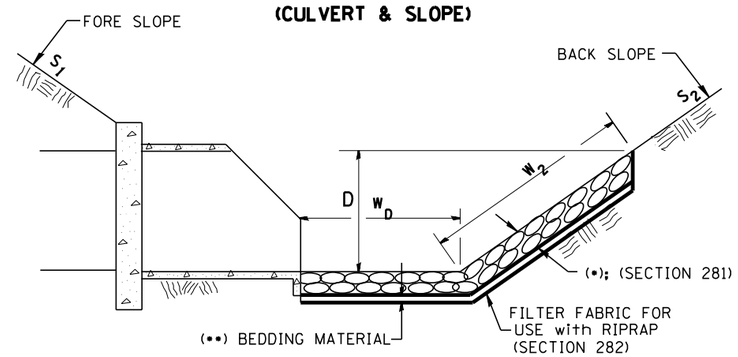

(✱)				
LOCATION	WIDTH (1)	LENGTH	RIPRAP	FABRIC
STA TO STA	lin ft (m)	lin ft (m)	tons (m tons)	sq yds (m^2)
TOTAL				

(1) WIDTH = $W_2 + W_D$

CASE 3
(CULVERT)

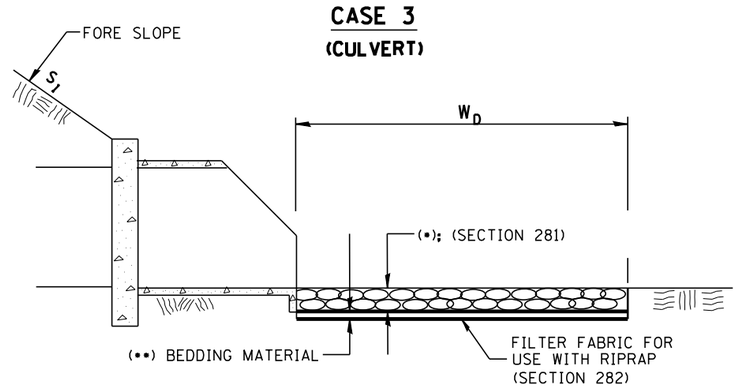

(✱)				
LOCATION	WIDTH (1)	LENGTH	RIPRAP	FABRIC
STA TO STA	lin ft (m)	lin ft (m)	tons (m tons)	sq yds (m^2)
TOTAL				

(1) WIDTH = W_D

Designer NOTES:
1. Designer to modify this Special Detail Sheet, as needed for inclusion in plans.
2. (•) Designer to specify pay item including material, quality, and gradation.
3. (••) Designer to specify thickness of bedding material.
4. Include District Special Provision if needed.

All slope ratios are expressed as units of vertical displacement to units of horizontal displacement (V:H).

All dimensions are in inches (millimeters) unless otherwise noted.

1-1-97	RENUM. A-12.02, NEW REVISION BOX	T.P.
12-1-97	CORRECT FILTER FABRIC LEADER ARROW	J.A.
10-16-06	REVISED TO 2007 SPEC.	M.A.

STATE OF ILLINOIS
DEPARTMENT OF TRANSPORTATION

RIPRAP DITCH FOR EROSION PROTECTION

NOT TO SCALE

CADD STD. 281001-D4

F.A.I RTE.	SECTION	COUNTY	TOTAL SHEETS	SHEET NO.
•	90-[14R;(14HB-4,14,14HVB)BR]	TAZEWELL	2433	2098
		CONTRACT NO. 68620		
FED. ROAD DIST. NO.	ILLINOIS	FED. AID PROJECT		

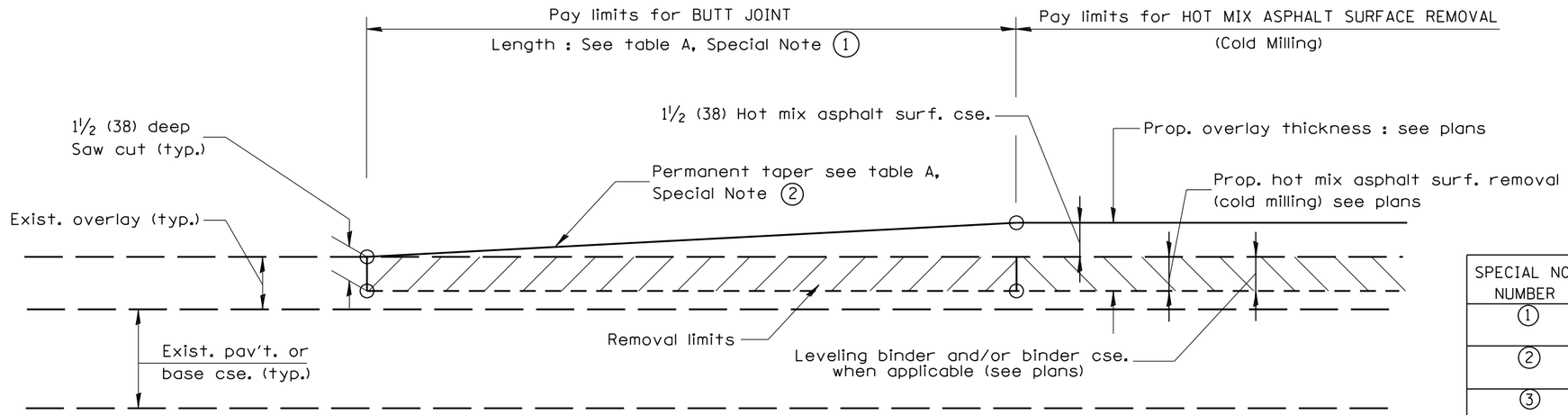

CASE 1 : WITH HOT MIX ASPHALT SURFACE REMOVAL (COLD MILLING)

TABLE A

(LENGTHS AND TAPER RATES)

SPECIAL NOTE NUMBER	ELEMENT	MAINLINE INTERSTATES & 4-LANE EXPRESSWAYS	ALL OTHERS
1	LENGTH OF BUTT JOINT	60'(18.0 m)	30'(9.0 m)
2	PERMANENT TAPER RATE	1:480	1:240
3	TEMPORARY RAMP TAPER RATE	1:80	1:40
4	TEMPORARY RAMP LENGTH	10'(3.0 m)	5'(1.5 m)
5	LENGTH OF BUTT JOINT	10'(3.0 m)	10'(3.0 m)

GENERAL NOTES

1. The work shall be done in accordance with Article 406.08 and the Special Provision for Butt Joints.
2. The pavement surface to be removed may be either bituminous or P.C. concrete. The work shall be performed in accordance with Article 440.04 and the Special Provisions for Butt Joints.
3. The saw cut joints shall be primed just prior to the placing of bituminous material. The work will be in accordance with the applicable portions of Article 406.05.

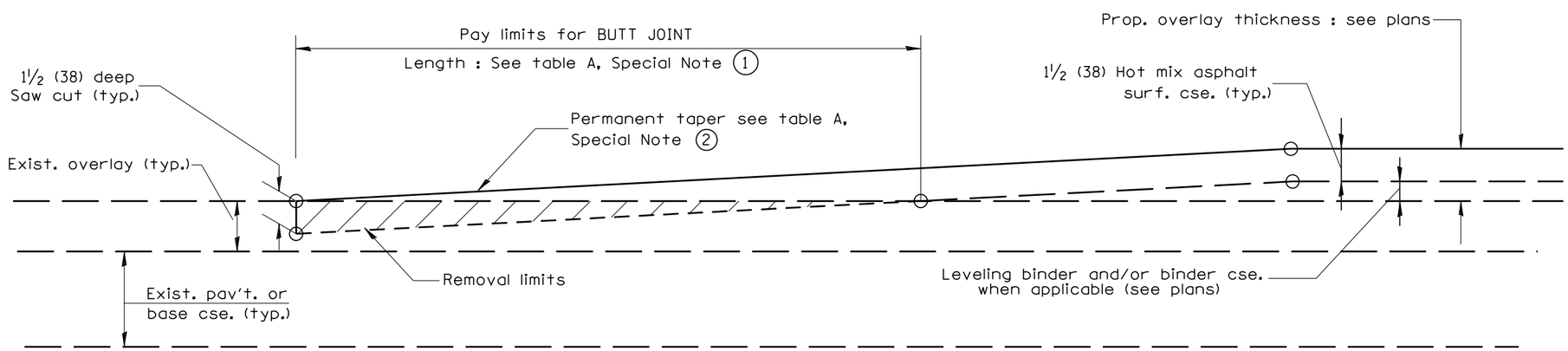

CASE 2 : NO HOT MIX ASHALT SURFACE REMOVAL (COLD MILLING)

DESIGNER NOTES:
1. Include District Special Provision for Butt Joints & for Hot Mix Asphalt Removal (Cold Milling).
2. The butt joints pay item includes the saw cut & temporary ramp. Payment for the Butt Joint applies whether or not the project features Hot Mix Asphalt Removal (Cold Milling).

All dimensions are in inches (millimeters) unless otherwise noted.

01-01-97	RENUM. C-23.01, NEW REVISION BOX	T.P.
04-01-97	CORRECTION TO DEPTH	J.A.
09-15-05	REVISED DESIGNER NOTE	M.M.A.
10-16-06	REVISED TO 2007 SPEC.	M.A.

STATE OF ILLINOIS
DEPARTMENT OF TRANSPORTATION

BUTT JOINTS

NOT TO SCALE

SHT. 1 OF 3
CADD STD. 406101-D4

F.A.I RTE.	SECTION	COUNTY	TOTAL SHEETS	SHEET NO.
•	90-[14R;(14HB-4,14,14HVB)BR]	TAZEWELL	2433	2099
		CONTRACT NO. 68620		
FED. ROAD DIST. NO.	ILLINOIS	FED. AID PROJECT		

• 74 & 155

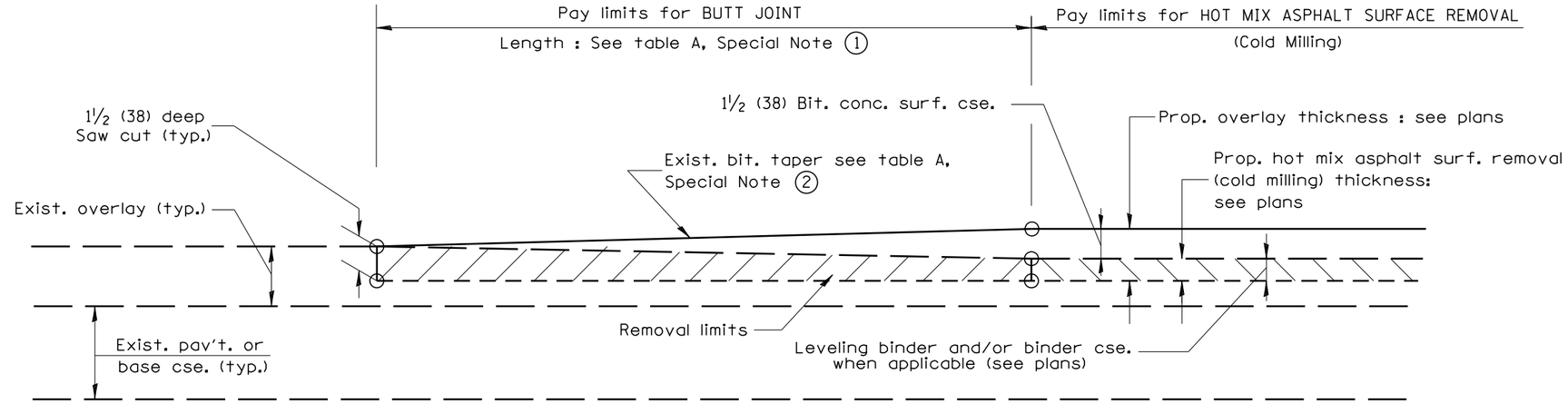

CASE 3 : WITH HOT MIX ASPHALT SURFACE REMOVAL (COLD MILLING)
TIE-IN TO EXISTING BITUMINOUS TAPER

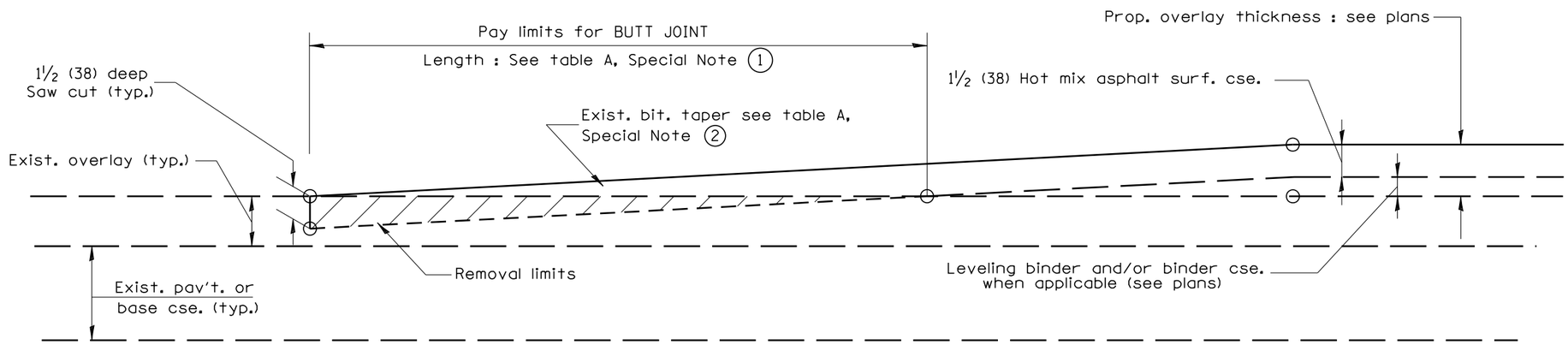

CASE 4 : NO HOT MIX ASPHALT SURFACE REMOVAL (COLD MILLING)
TIE-IN TO EXISTING BITUMINOUS TAPER

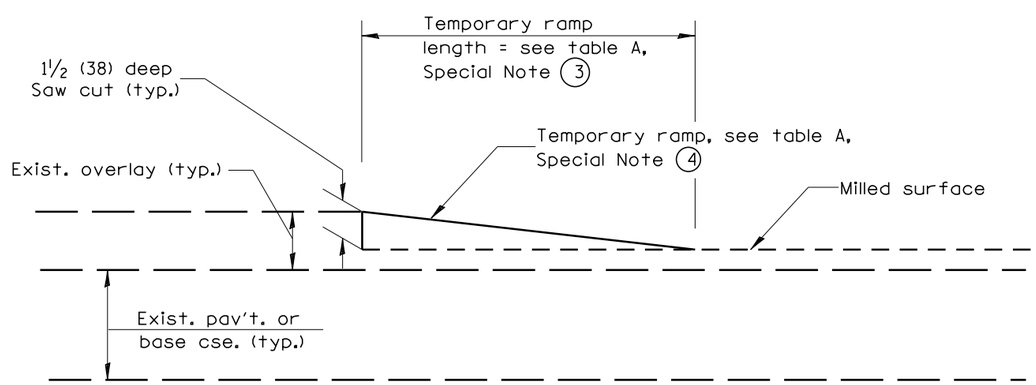

DETAIL TEMPORARY RAMP

All dimensions are in inches (millimeters) unless otherwise noted.

DESIGNER NOTES:
1. Include District Special Provision for Butt Joints & for Hot Mix Asphalt Removal (Cold Milling).
2. The butt joints pay item includes the saw cut & temporary ramp. Payment for the Butt Joint applies whether or not the project features Hot Mix Asphalt Removal (Cold Milling).

STATE OF ILLINOIS
DEPARTMENT OF TRANSPORTATION

BUTT JOINTS

NOT TO SCALE

SHT. 2 OF 3
CADD STD. 406101-D4

F.A.I RTE.	SECTION	COUNTY	TOTAL SHEETS	SHEET NO.
•	90-[14R;(14HB-4,14,14HVB)BR]	TAZEWELL	2433	2100
		CONTRACT NO. 68620		
FED. ROAD DIST. NO.	ILLINOIS	FED. AID PROJECT		

• 74 & 155