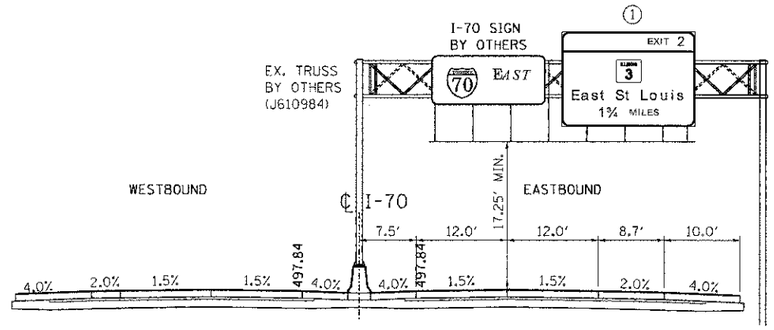

EX. TRUSS (BY OTHERS)
STA. 69+44
I-70 LOOKING EASTBOUND
MISSOURI

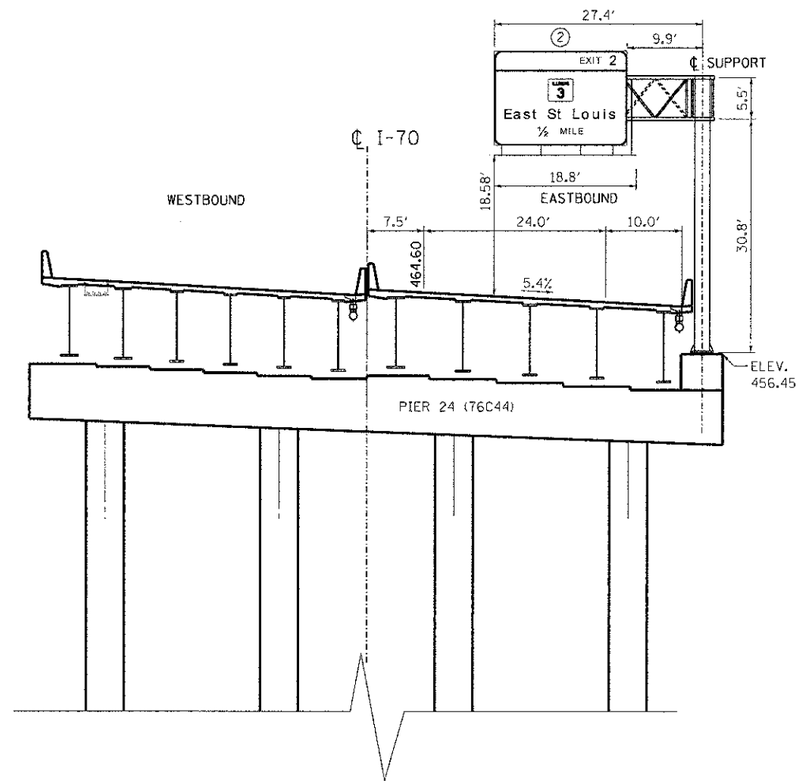

8C082I070R001.1
STA. 130+03
I-70 LOOKING EASTBOUND

..\DBCONN-99-MOTIF1.DGN ..\DBCONN-98-BORDER1.DGN ..\DBCONN-98-MOTIF1.DGN ..\DBCONN-11-MOTIF1.DGN ..\DBCONN-03-LEGEND1.DGN ..\DHCONN-98-SIGNS3.DGN ..\DBCONN-98-SIGNS3.DGN
6-27-2012, 9:57:58 BENDHUJD \\FS-0044\AM\VAULT\D-TRANS.37\2202\20868-00\CIVIL\CAD\99 ALL CONTRACTS\CONN\SHEETS CONTRACT (8)\DBCONN-98-SHT-SIGNS2-1.DGN

FILE NAME = $FILEL$	USER NAME = $USER$	DESIGNED - JB	REVISED -	STATE OF ILLINOIS DEPARTMENT OF TRANSPORTATION I-70 CONNECTION	PROPOSED OVERHEAD SIGN STRUCTURES SIGN PANEL PLACEMENT 1	F.A.P. RTE.	SECTION	COUNTY	TOTAL SHEETS	SHEET NO.
		DRAWN - JB	REVISED -			998	82-1R	ST. CLAIR	294	207
TENG & ASSOCIATES, INC. ENGINEERS/ARCHITECTS/PLANNERS CHICAGO, ILLINOIS	PLOT SCALE = $SCALE$	CHECKED - ACL	REVISED -					CONTRACT NO. 76C43		
	PLOT DATE = $DATE$	DATE - 06/29/12	REVISED -		SCALE: N.T.S. / SHEET NO. 1 OF 6 SHEETS / STA. / TO STA.	FED. ROAD DIST. NO.	ILLINOIS	FED. AID PROJECT		