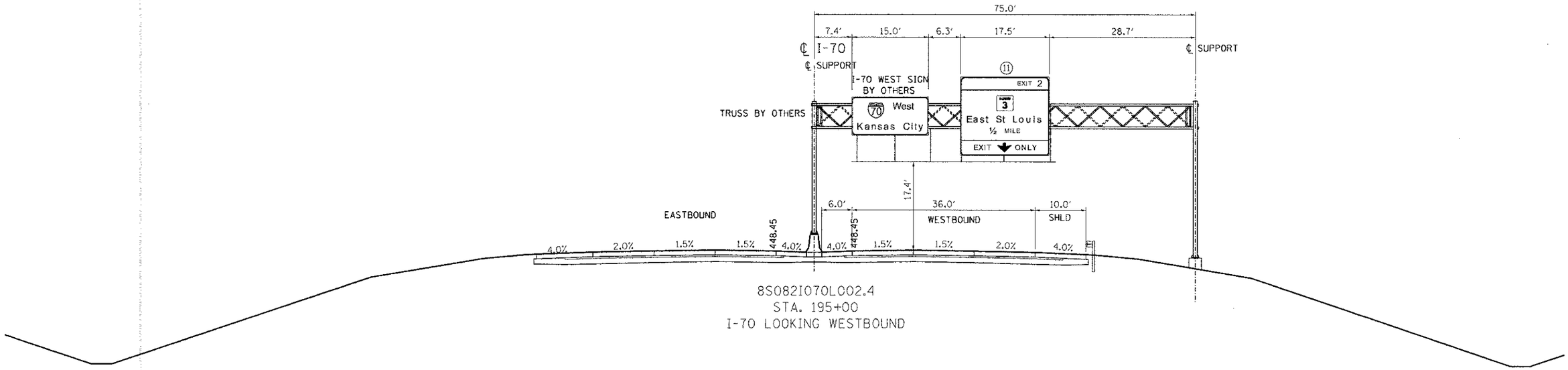

8S082I070L002.4
STA. 195+00
I-70 LOOKING WESTBOUND

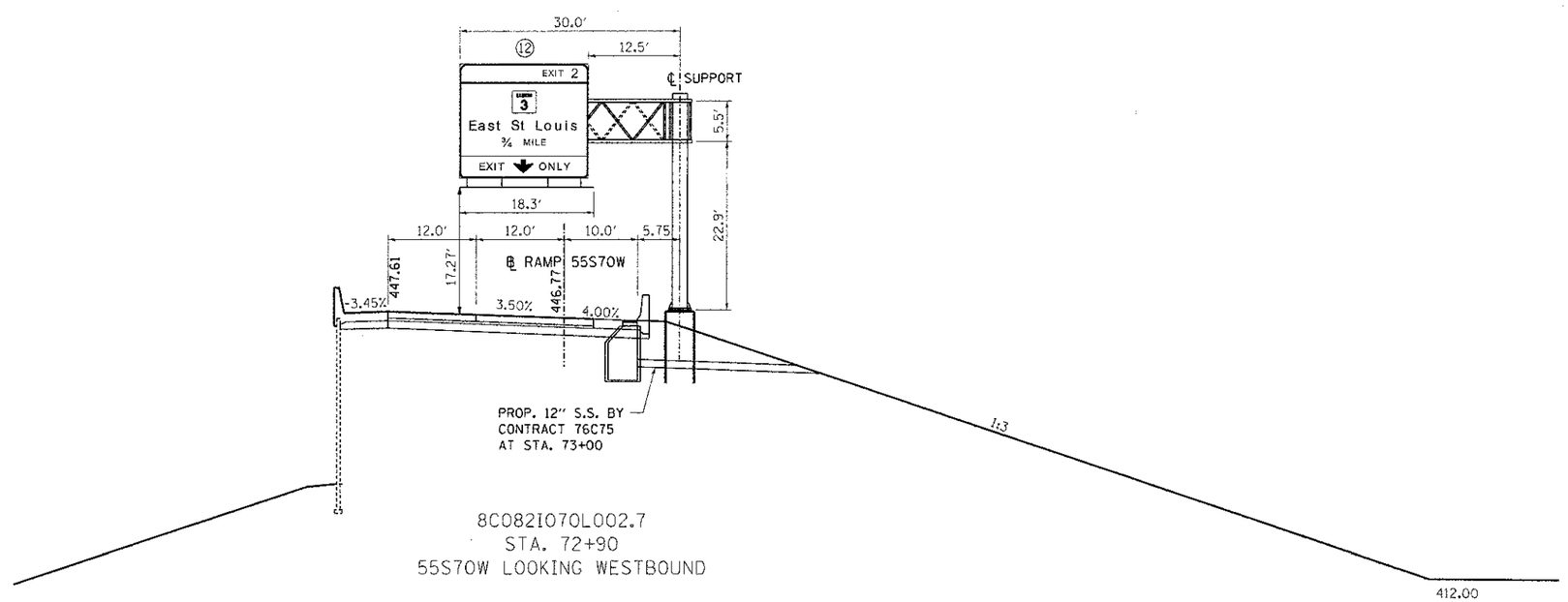

8C082I070L002.7
STA. 72+90
55S70W LOOKING WESTBOUND

FILE NAME = $FILEL$	USER NAME = $USER$	DESIGNED - JB	REVISED -	STATE OF ILLINOIS DEPARTMENT OF TRANSPORTATION	PROPOSED OVERHEAD SIGN STRUCTURES SIGN PANEL PLACEMENT 5	F.A.P. RTE.	SECTION	COUNTY	TOTAL SHEETS	SHEET NO.
		DRAWN - JB	REVISED -			998	82-1R	ST. CLAIR	294	211
TENG TENG & ASSOCIATES, INC. ENGINEERS/ARCHITECTS/PLANNERS CHICAGO, ILLINOIS	PLOT SCALE = $SCALE$	CHECKED - ACL	REVISED -	I-70 CONNECTION		CONTRACT NO. 76C43				
	PLOT DATE = $DATE$	DATE - 06/29/12	REVISED -		SCALE: N.T.S. / SHEET NO. 5 OF 6 SHEETS / STA. / TO STA.	FED. ROAD DIST. NO.	ILLINOIS	FED. AID PROJECT		