STATE OF ILLINOIS
DEPARTMENT OF TRANSPORTATION

ROUTE NO.	SECTION	COUNTY	TOTAL SHEETS	SHEET NO.
F.A.I. RTE. 90/94	*	COOK	312	163
FED. ROAD DIST. NO. 1	ILLINOIS	FED. AID PROJECT-		

* (1919.15 & 2021-922 PT.)) R-1

6DAG2

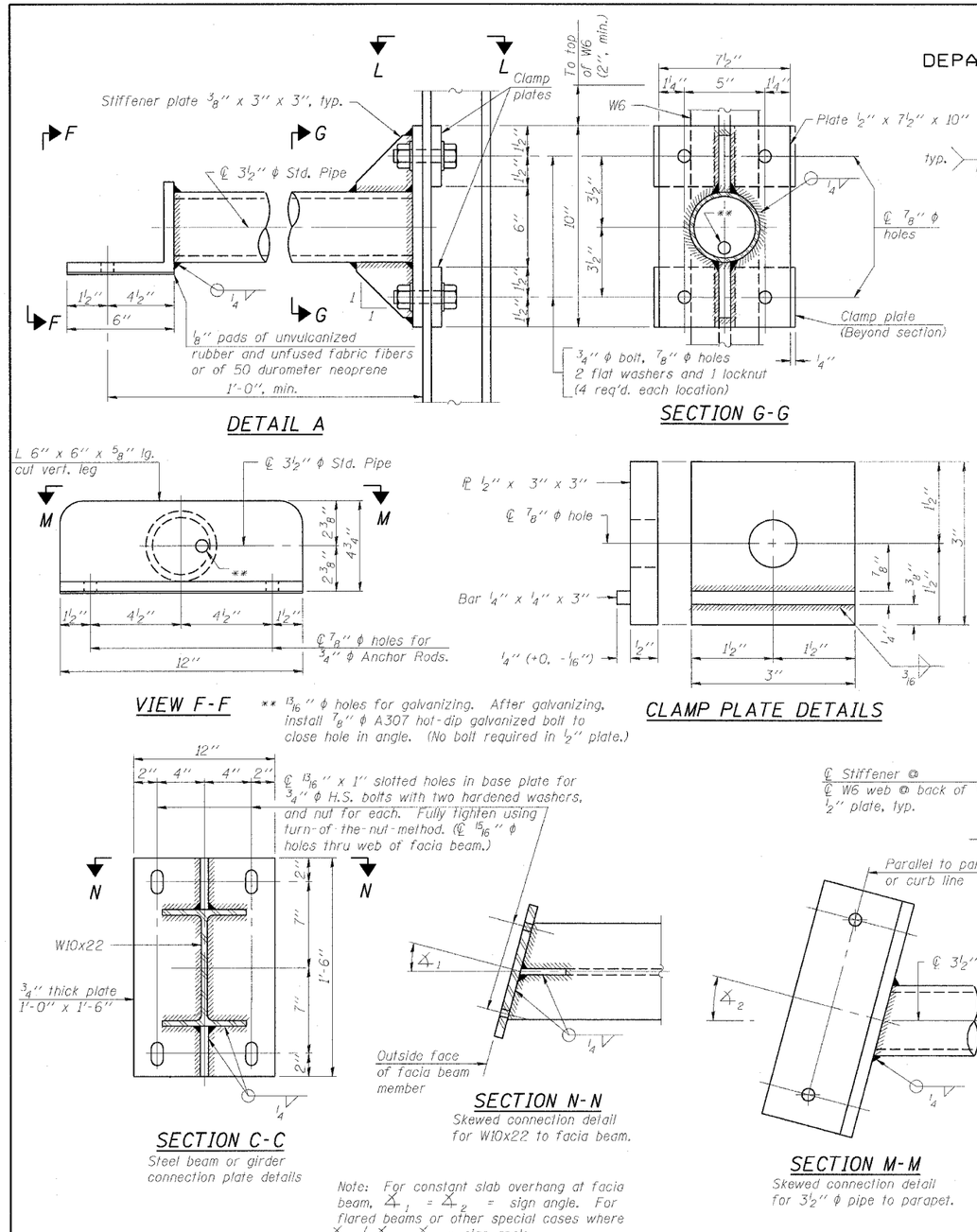

Note: For constant slab overhang at facia beam, ∡1 = ∡2 = sign angle. For flared beams or other special cases where ∡1 ≠ ∡2, ∡-1 = sign angle.

DESIGNED	JSS
CHECKED	RDP
DRAWN	JSS
CHECKED	RDP

BM-3 1-7-05

- 20

EXAMINED

ENGINEER OF STRUCTURAL SERVICES

PASSED

ENGINEER OF BRIDGES AND STRUCTURES

NUMBER	REVISION	DATE

OSS-36

BRIDGE MOUNT SIGN STRUCTURES
CONNECTION DETAILS

F.A.I. 90/94 (DAN RYAN EXPRESSWAY)
63RD STREET TO GARFIELD BLVD (NB LOCAL LANES)
PROPOSED IMPROVEMENT
63RD STREET TO GARFIELD BLVD

P:\P4046B\Unit\NB\Cntrs 18 & 19\Sh\Carr 18\Signing\SS18A03B2.dgn
6/27/2006 11:20:00 AM