F.A.I. RTE.	SECTION	COUNTY	TOTAL SHEETS	SHEET NO.
90/94	•	COOK	312	237
STA.		TO STA.		
FED. ROAD DIST. NO. 1	ILLINOIS	FED. AID PROJECT		

60A62 • (1919.15, 2021-922 PT1 & PT2) R-1

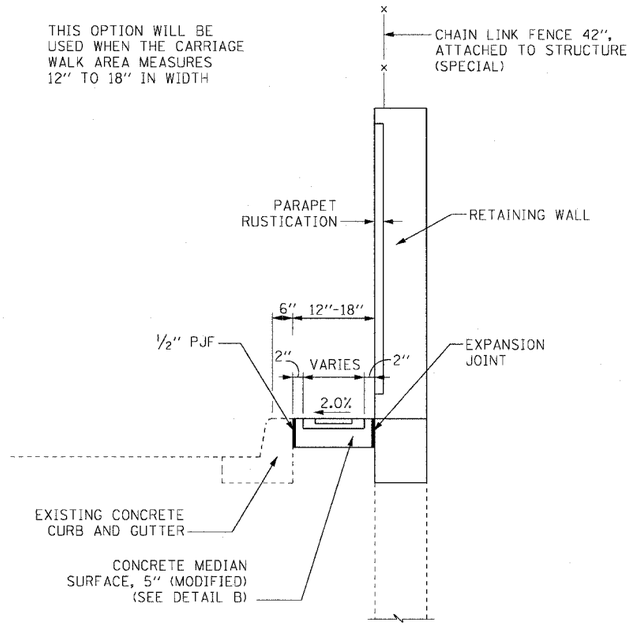

CARRIAGE WALK
AREA 12" TO 18" WIDE

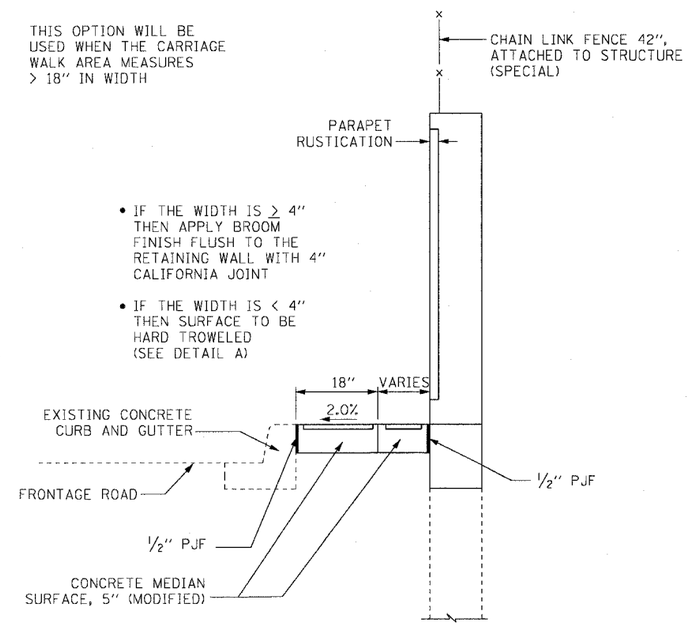

CARRIAGE WALK
AREA > 18" WIDE

CIVIL BILL OF MATERIAL

ITEM	UNIT	QUANTITY
Protective Coat	Sq. Yd.	230
Paved Shoulder Removal	Sq. Yd.	231
Guardrail Removal	Foot	54
Concrete Median Surface, 5" (Modified)	Sq. Ft.	2,070

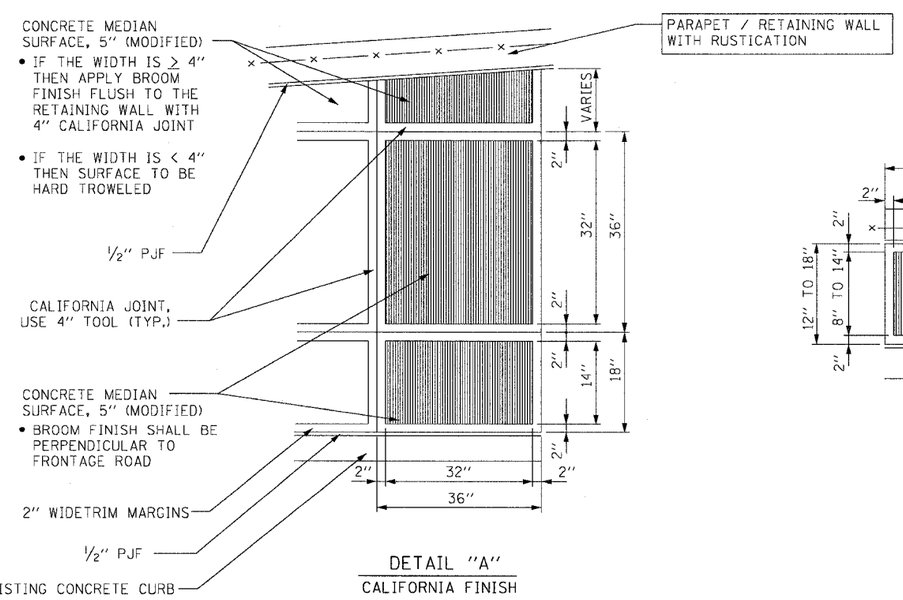

DETAIL "A"
CALIFORNIA FINISH

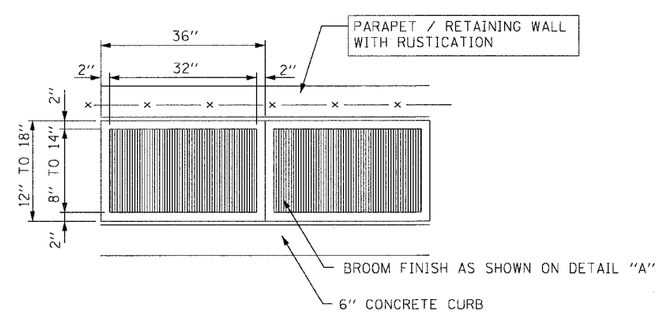

DETAIL "B"
CALIFORNIA FINISH

CTE | AECOM

Sheet A8 of 8

REVISIONS	
NAME	DATE

ILLINOIS DEPARTMENT OF TRANSPORTATION
F.A.I. 90/94 (DAN RYAN EXPRESSWAY)
63RD STREET TO GARFIELD BLVD (NB LOCAL LANES)

CONCRETE MEDIAN SURFACE, 5" (MODIFIED)
CARRIAGE WALK AND CALIFORNIA FINISH DETAIL

SCALE: NONE
DATE: June 9, 2006
DRAWN BY: PHP
CHECKED BY: NJH

F:\P40466\Struct\N8-Cntr186\Cntr186\SMS\S07T8A001EA.sht
11:10:32 AM
6/12/2006