STATE OF ILLINOIS
DEPARTMENT OF TRANSPORTATION

ROUTE NO.	SECTION	COUNTY	TOTAL SHEETS	SHEET NO.
F.A.I. RTE. 90/94	*	COOK	247	118
FED. ROAD DIST. NO. 1	ILLINOIS	FED. AID PROJECT-		

* (1919.15 & 2021-922 PT.1) R-2

60A63

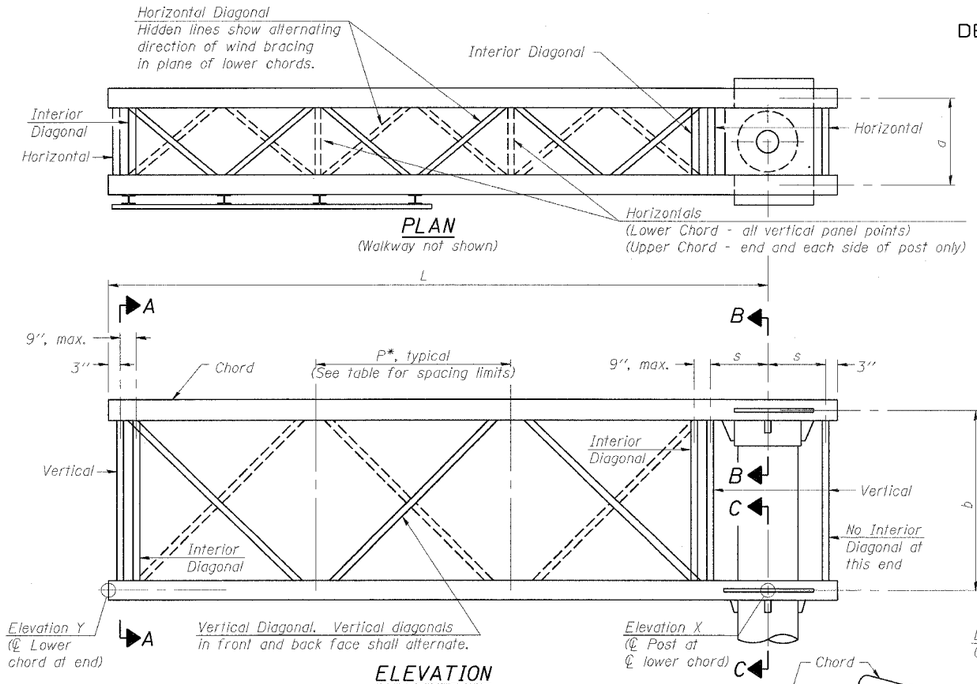

PLAN
(Walkway not shown)

ELEVATION
(Sign and walkway omitted for clarity)

TYPICAL TRUSS UNIT
For Section B-B and Section C-C, see Base Sheet OSC-A-3.

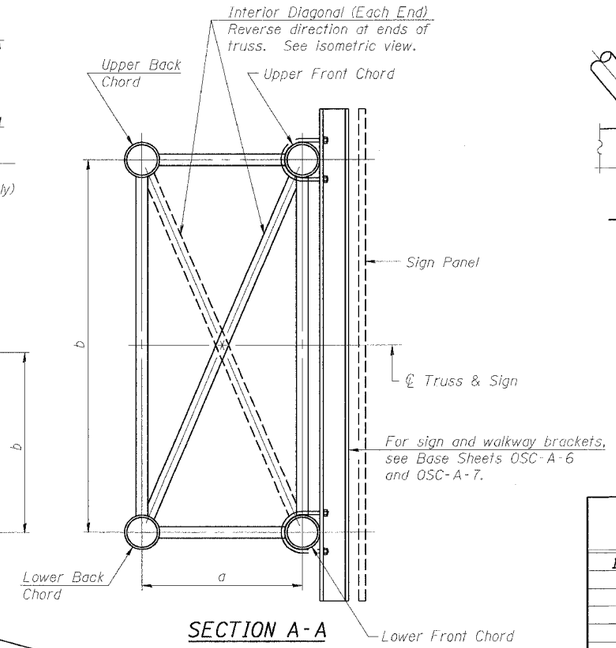

SECTION A-A

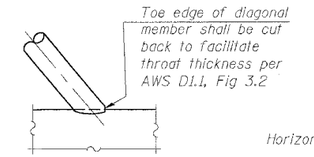

DETAIL A

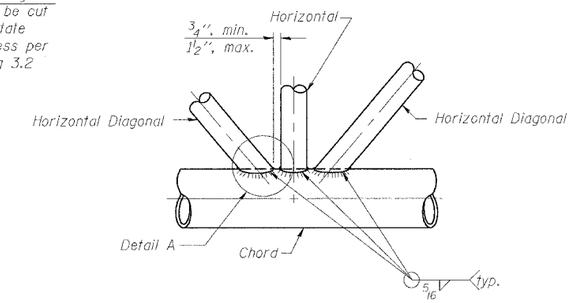

TRUSS INTERIOR JOINT DETAIL

Structure Number	Station	Truss Type	Design Length (L)	Number of Panels Per Unit	Panel Length (P)*
1C0161094R057.9	3468+00.00	II-C-A	28.0'	6	4'-4"

Note:
There are twice as many horizontal diagonals as there are vertical diagonals.

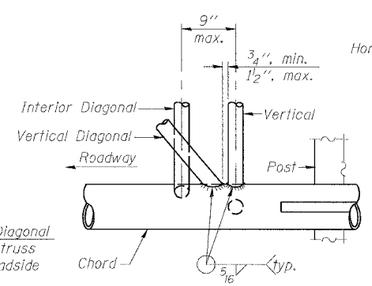

POST END JOINT DETAIL

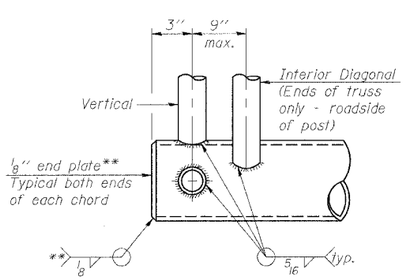

CANTILEVER END JOINT DETAIL
** Contractor may alternatively use standard aluminum drive-fit cap to close ends.

SHOP CAMBER TABLE

Unit Length (L)	Shop Camber at End
15'	1 1/2"
16'-17'	1 3/4"
18'-20'	2"
21'-22'	2 1/4"
23'-25'	2 1/2"
26'-27'	2 3/4"
28'-30'	3"
31'-32'	3 1/4"
33'-35'	3 1/2"
36'-37'	4"
38'-40'	4 1/2"

CAMBER DIAGRAM
(For Fabrication Only)

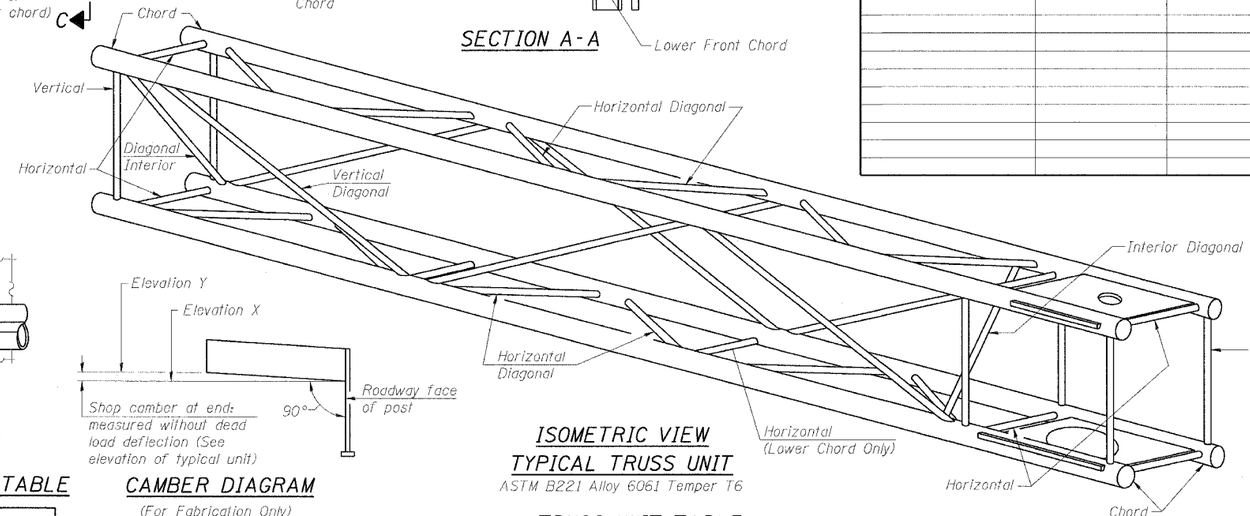

ISOMETRIC VIEW
TYPICAL TRUSS UNIT
ASTM B221 Alloy 6061 Temper T6

TRUSS UNIT TABLE

Truss Type	Dimension "a"	Dimension "b"	Dimension "s"	Limits for Panel Spacing (P)*	Up. & Low. Chord O.D.	Up. & Low. Chord Wall	Verticals; Horizontals; Vertical, Horizontal, and Interior Diagonals O.D.	Verticals; Horizontals; Vertical, Horizontal, and Interior Diagonals Wall
I-C-A	24"	54"	16"	36" min. to 48" max.	5"	5/16"	2 1/2"	5/16"
II-C-A	36"	66"	21"	42" min. to 54" max.	6 1/2"	5/16"	3 1/4"	5/16"
III-C-A (35' Max.)	36"	84"	21"	48" min. to 66" max.	7"	3/8"	3 1/2"	3/8"
III-C-A (>35' to 40')	36"	84"	21"	48" min. to 66" max.	8"	3/8"	3 1/2"	3/8"

$$*P = \frac{L - s - 3''}{\#\ Panels}$$

NUMBER	REVISION	DATE

OSS-20

CANTILEVER SIGN STRUCTURES
TRUSS DETAILS
ALUMINUM TRUSS & STEEL POST

F.A.I. 90/94 (DAN RYAN EXPRESSWAY)
63RD STREET TO GARFIELD BLVD (SB LOCAL LANES)
PROPOSED IMPROVEMENT

DESIGNED	-	JSS
CHECKED	-	MJP
DRAWN	-	JSS
CHECKED	-	MJP

- 20

EXAMINED
ENGINEER OF STRUCTURAL SERVICES

PASSED
ENGINEER OF BRIDGES AND STRUCTURES

OSC-A-2 1-7-05

P:\P40468\Cnt\08-Cntr 18 & 19\Sht\Cntr 19A\Signing\SS19A02D2A.dgn
6/12/2006 11:25:51 AM