CONTRACT NO. 60B85

F.A.I. RTE.	SECTION	COUNTY	TOTAL SHEETS	SHEET NO.
55	2006-031 BY	WILL	137	89
STA.		TO STA.		
FED. ROAD DIST. NO.	ILLINOIS	FED. AID PROJECT		

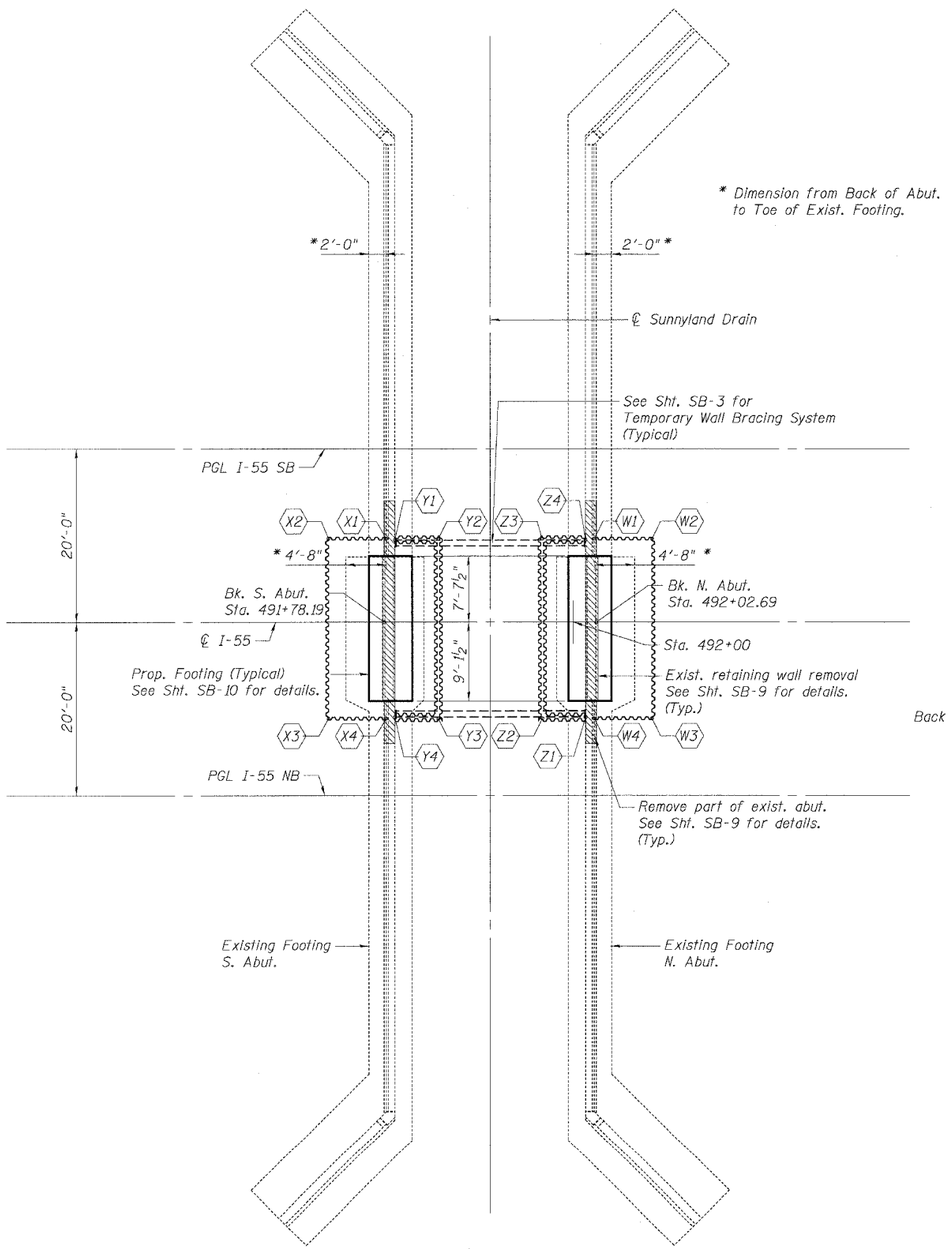

SUBSTRUCTURE LAYOUT PLAN

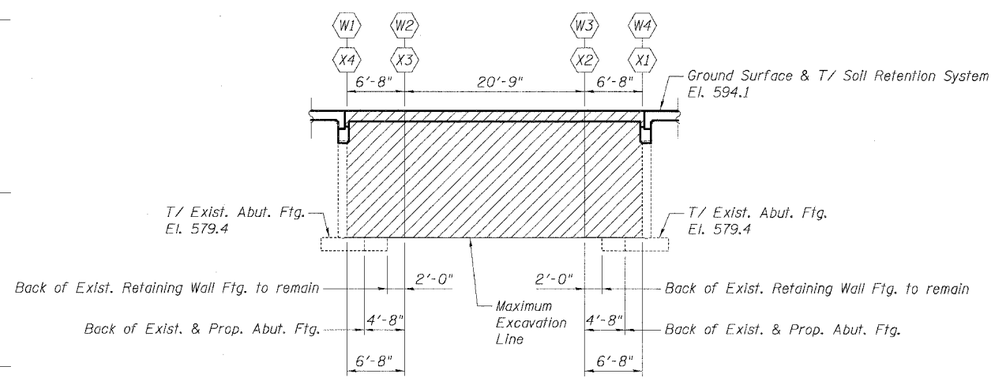

TEMPORARY SOIL RETENTION SYSTEM DEVELOPED ELEVATION

(Typical for two locations)

A cantilevered sheet piling design does not appear feasible and additional members or other retention systems may be necessary. The Contractor shall submit a temporary soil retention system design including plan details and calculations for review and acceptance by the Engineer.

COFFERDAM LOCATIONS

Location	Station	Offset (ft.)
Y1	491+79.44	9.63 Lt.
Y2	491+84.44	9.63 Lt.
Y3	491+84.44	11.13 Rt.
Y4	491+79.44	11.13 Rt.
Z1	492+01.44	11.13 Rt.
Z2	491+96.44	11.13 Rt.
Z3	491+96.44	9.63 Lt.
Z4	492+01.44	9.63 Lt.

TEMPORARY SOIL RETENTION SYSTEM LIMITS

Location	Station	Offset (ft.)
X1	491+78.44	9.63 Lt.
X2	491+71.77	9.63 Lt.
X3	491+71.77	11.13 Rt.
X4	491+78.44	11.13 Rt.
W1	492+02.44	9.63 Lt.
W2	492+09.11	9.63 Lt.
W3	492+09.11	11.13 Rt.
W4	492+02.44	11.13 Rt.

LEGEND

- Temp. Soil Retention System
- Cofferdam
- Concrete Removal See Sht. SB-9 for details.
- Theoretical and Pay Limits of Temporary Soil Retention System

BILL OF MATERIAL

Item	Unit	Total
Temporary Soil Retention System	Sq Ft	1,002
Cofferdams	Each	2
Cofferdam Excavation	Cu Yd	20

SHT. SB-4 OF 13

REVISIONS	
NAME	DATE

ILLINOIS DEPARTMENT OF TRANSPORTATION
FAI ROUTE 55 (OVER CSX RR AND SUNNYLAND DRAIN)
BRIDGE WIDENING
NB & SB I-55 OVER SUNNYLAND DRAIN, S.N. 099-0014 & 099-0015
STA. 491+90.44, SECTION 2006-031 BY
WILL COUNTY

SUBSTRUCTURE LAYOUT
COFFERDAM CONFIGURATION
TEMPORARY SOIL RETENTION

SCALE: DRAWN BY MDB
DATE 07/21/06 CHECKED BY MJK

TENG & ASSOCIATES, INC.
ENGINEERS/ARCHITECTS/PLANNERS
CHICAGO, ILLINOIS

PLOT DATE = $DATE$
FILE NAME = $FILEL$
PLOT SCALE = $SCALE$
USER NAME = $USER$

..\B099140B2.DGN 7-19-2006, 13:46:57 CANCINAZ S:\DOCUMENT\W2361500\STRUCTURE\SLD\91A040.SHT