F.A.I.	SECTION	COUNTY	TOTAL SHEETS	SHEET NO.
94/90	•	COOK	565	403
STA.		TO STA.		
FED. ROAD DIST. NO.	ILLINOIS	FED. AID PROJECT		

62301 •(2021-922 PT2 ETC 2324.6-1P) R-10

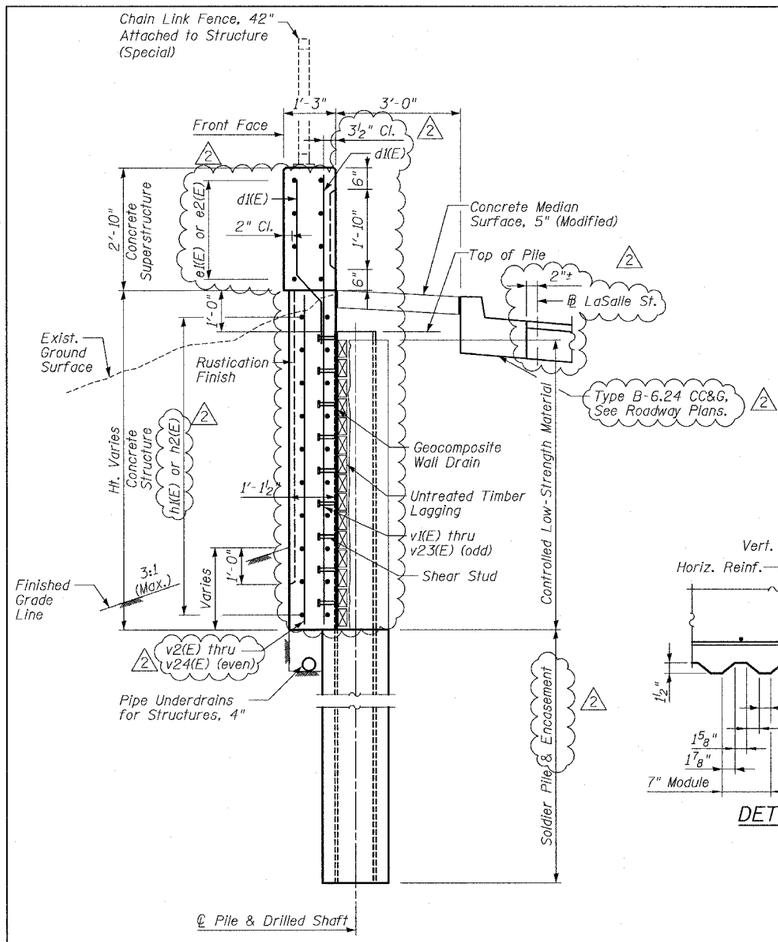

TYP. SECTION THRU PROPOSED WALL

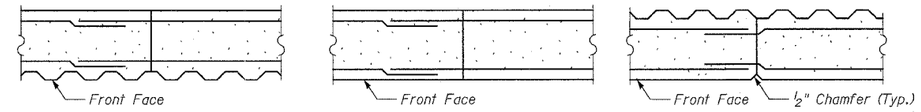

WITH RUSTICATION FINISH — BELOW RUSTICATION FINISH — ABOVE RUSTICATION FINISH (In Fluted Parapet)

CONSTRUCTION JOINT DETAILS

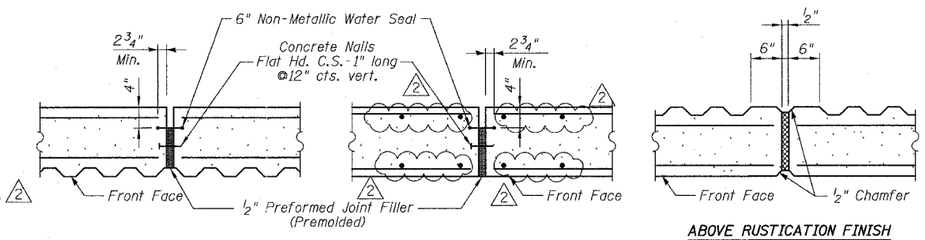

WITH RUSTICATION FINISH — BELOW RUSTICATION FINISH — ABOVE RUSTICATION FINISH (In Fluted Parapet)

EXPANSION JOINT DETAILS

Cost of P.J.F., Water Seal and Concrete Nails included with Concrete Structures.

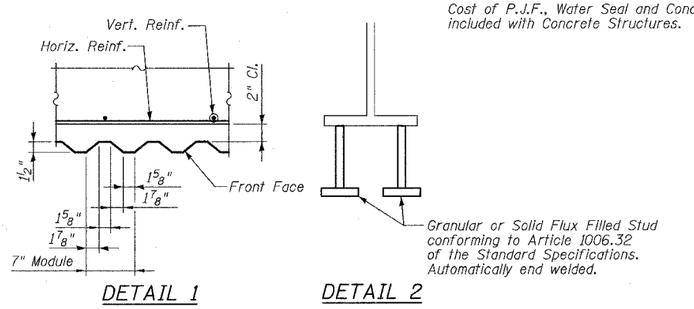

DETAIL 1 — DETAIL 2

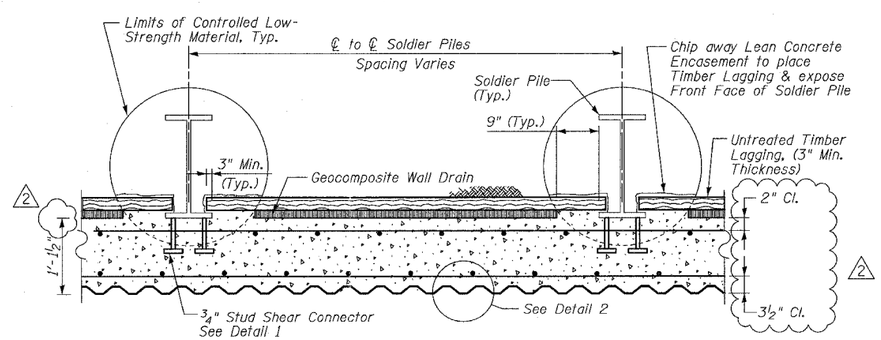

SECTION THRU SOLDIER PILE WALL

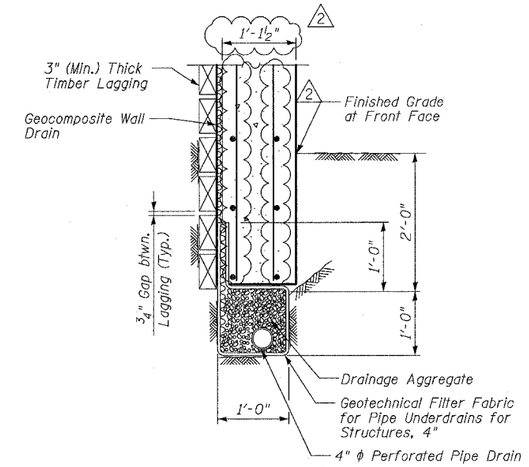

PIPE UNDERDRAIN DETAIL BETWEEN SOLDIER PILES

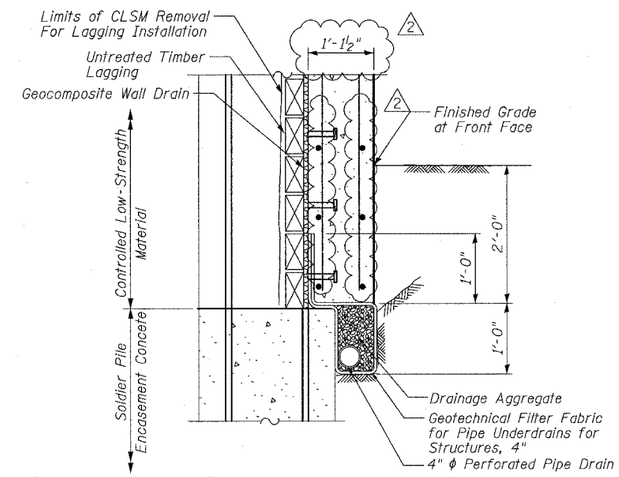

PIPE UNDERDRAIN DETAIL AT SOLDIER PILES

SHEET 7 OF 9

REVISIONS	
NAME	DATE
REVISED	06/21/06
ADDENDUM 2	8/04/06

ILLINOIS DEPARTMENT OF TRANSPORTATION

F.A.I. 94/90 (DAN RYAN EXPRESSWAY)
GARFIELD BLVD TO 31ST STREET (NB LOCAL LANES)

RETAINING WALL N-43N-F
MISCELLANEOUS DETAILS

SCALE: NTS — DRAWN BY: MTR
DATE: JUNE 9, 2006 — CHECKED BY: BLU

BOWMAN, BARRETT & ASSOCIATES INC.
CONSULTING ENGINEERS
Chicago, Illinois
312.228.0100
www.bbandainc.com

N:\560\cadd\cfs\N\N-R-ET AINING WALLS-560_IDSMDH43NF.dgn
8/4/2006 11:50:34 AM