STATE OF ILLINOIS
DEPARTMENT OF TRANSPORTATION

ROUTE NO.	SECTION	COUNTY	TOTAL SHEETS	SHEET NO.
S.B.I. # F.A. 90/94	*	COOK	588	279

SHEET NO. ___
___ SHEETS

* 62303 (2021-922 PT2 ETC 2324.6-1P) R-11

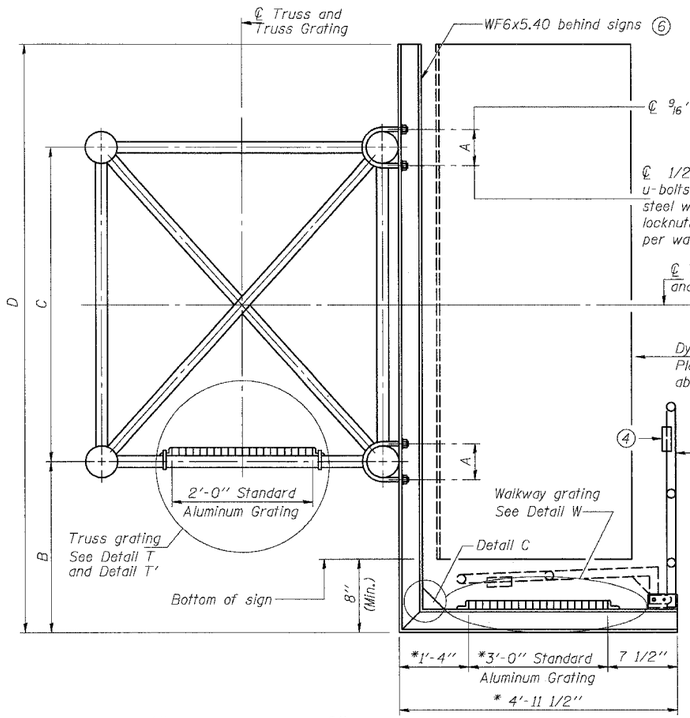

SECTION B-B

* Bracket and grating dimensions are nominal and will vary based on actual DMS cabinet dimensions plus manufacturer's mounting devices, and providing clearance between the lowered handrail and DMS cabinet.

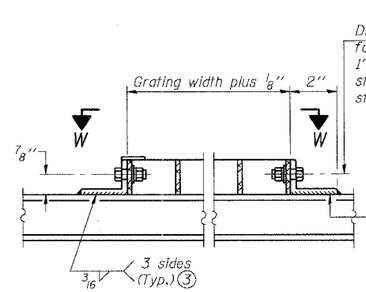

DETAIL W
(Walkway grating)

Drill (1) 3/8" ϕ holes in walkway for 5/16" ϕ stainless steel bolts, 1" long, each with one stainless steel locknut and two stainless steel flat washers.

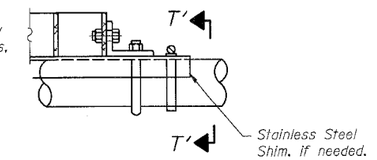

DETAIL T'
(Truss grating splice)
Details not shown same as Detail T.
Alternate materials may be used subject to the Engineer's review and approval.

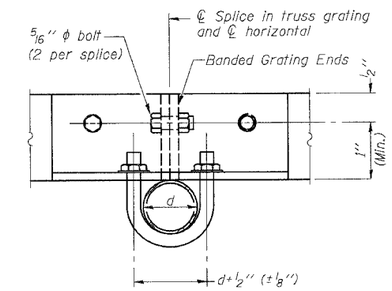

SECTION T'-T'

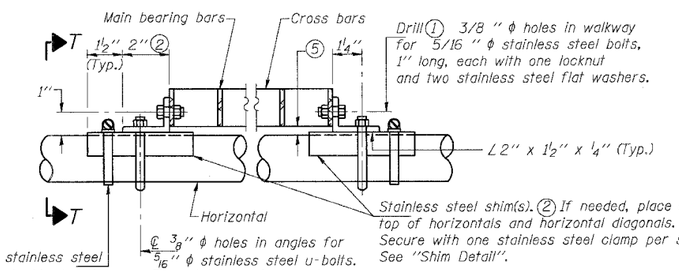

Drill (1) 3/8" ϕ holes in walkway for 5/16" ϕ stainless steel bolts, 1" long, each with one locknut and two stainless steel flat washers.

Stainless steel shim(s). (2) If needed, place on top of horizontals and horizontal diagonals. Secure with one stainless steel clamp per side. See "Shim Detail".

℄ 3/8" ϕ holes in angles for 5/16" ϕ stainless steel u-bolts. Two stainless steel washers and nuts required per bolt. U-bolt and angle connections required at horizontals only.

DETAIL T
(Continuous Truss grating)

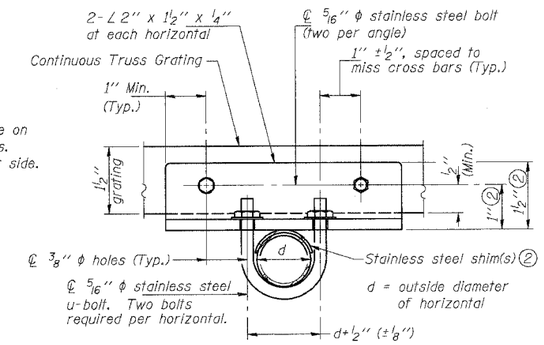

SECTION T-T

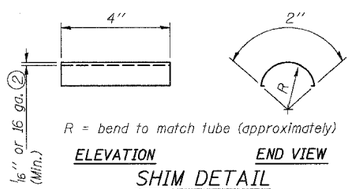

SHIM DETAIL

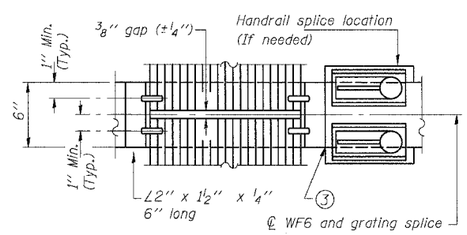

(AT WALKWAY GRATING SPLICE)

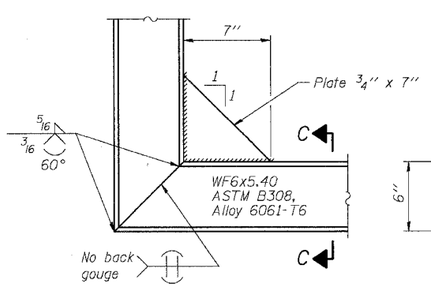

DETAIL C

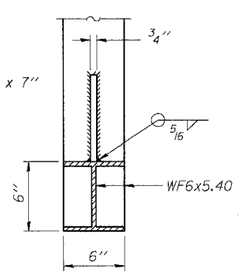

SECTION C-C

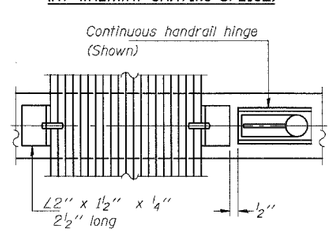

(CONTINUOUS WALKWAY GRATING)

SECTION W-W

SPECIFICATIONS FOR STANDARD ALUMINUM GRATING

Main Bearing Bars shall be 3/16" x 1 1/2" on 1 3/16" centers and conform to ASTM B211 Alloy 6061-T6.

Cross bars shall be 3/16" x 1 1/2" on 4" centers and conform to ASTM B221 Alloy 6063-T5 or 6061-T6.

OR

Aluminum Grating with modified "t" sections for main bearing bars shall meet the following requirements:

Main bars shall conform to ASTM B221 Alloy 6061-T6 and have a minimum section modulus equal to 0.0705 in.³ per bar, a depth of 1 1/2", spaced on 1 3/16" centers.

Cross bars shall conform to ASTM B221 Alloy 6063-T5 or T-42 and spaced on 4" centers.

Structure Number	Station	A	B	C	D
IS016I094R055.64	3586+50	7 1/2"	1'-5"	7'-0"	9'-2"
IS016I094R057.8	3475+92.44	7 1/2"	1'-5"	7'-0"	9'-2"

(1) Drilling holes in grating may be done in shop or field, based on Contractor's preference and subject to accurate alignment.

(2) Stainless steel shims shall be placed as shown in Detail T <u>if needed</u> to compensate for alignment variations between horizontal and diagonal pipes beyond adjustment provided by angles. Thicker shims may be used subject to shims performing properly.

(3) If Handrail Joint present, weld angle to WF6 and 1/4" extension bars. (See Base Sheet OS-A-11-DMS2.)

(4) PL 1/8" x 1/2" x 2" welded to handrail posts to protect locations that contact grating.

(5) Tube to grating gap may vary from 0 to 1/2" max. to align walkway, allow for camber, etc.

(6) Cabinet manufacturer must design and supply hardware for connection of cabinet to WF6's. Bolts must be stainless steel or hot dip galvanized high strength per IDOT specifications.

SGN-29

OVERHEAD SIGN STRUCTURES
ALTERNATE ALUMINUM WALKWAY DETAILS FOR DMS

ILLINOIS DEPARTMENT OF TRANSPORTATION
F.A.I. 94/90 (DAN RYAN EXPRESSWAY)

GARFIELD BLVD TO 31st STREET (SB LOCAL LANES)

OVERHEAD SIGN STRUCTURES
(SPAN)

DESIGNED	AC
CHECKED	AS
DRAWN	RV
CHECKED	MSA

EXAMINED _____ 19
ENGINEER OF STRUCTURAL SERVICES
PASSED _____
ENGINEER OF BRIDGES AND STRUCTURES

NUMBER	REVISION	DATE
2	ADDENDUM 2	8/04/06

OS-A-10-DMS2 1/7/2005