TYPICAL PAVING CROSS-SECTIONS
85TH AVENUE WEST
NOT TO SCALE

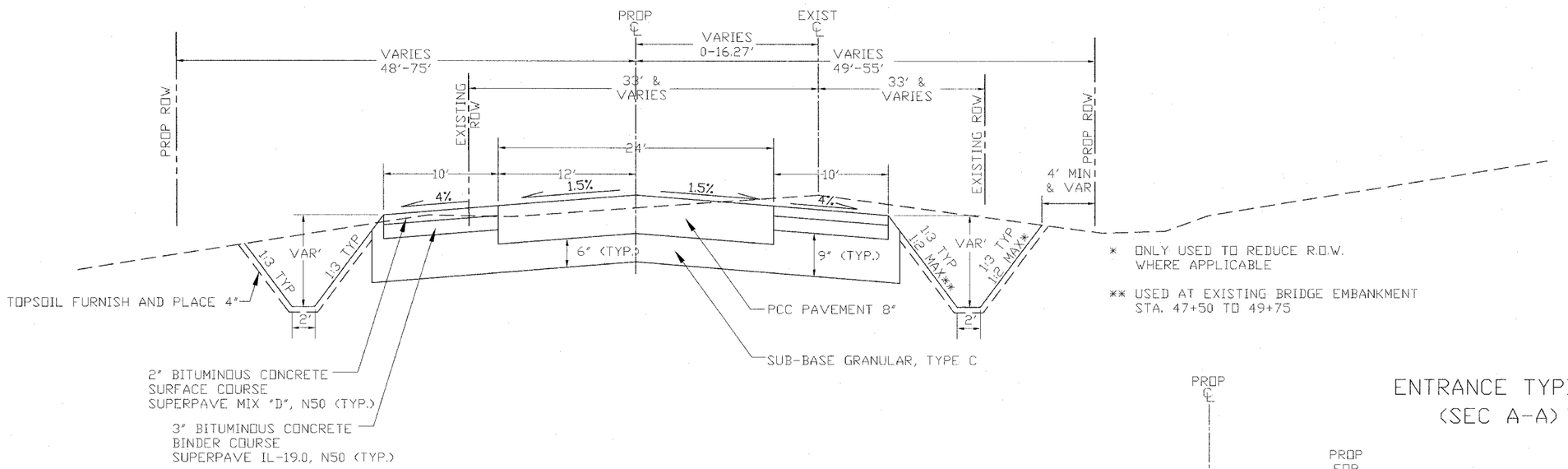

* ONLY USED TO REDUCE R.O.W. WHERE APPLICABLE

** USED AT EXISTING BRIDGE EMBANKMENT STA. 47+50 TO 49+75

STA. 10+34.64 - 34+14
STA. 37+06 - 52+50

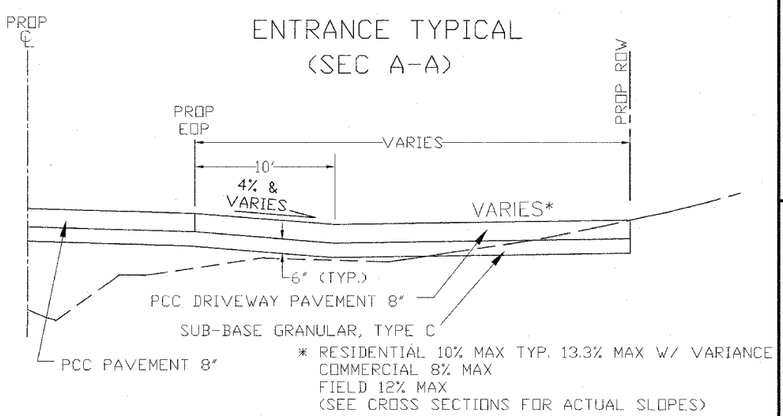

* RESIDENTIAL 10% MAX TYP. 13.3% MAX W/ VARIANCE
COMMERCIAL 8% MAX
FIELD 12% MAX
(SEE CROSS SECTIONS FOR ACTUAL SLOPES)

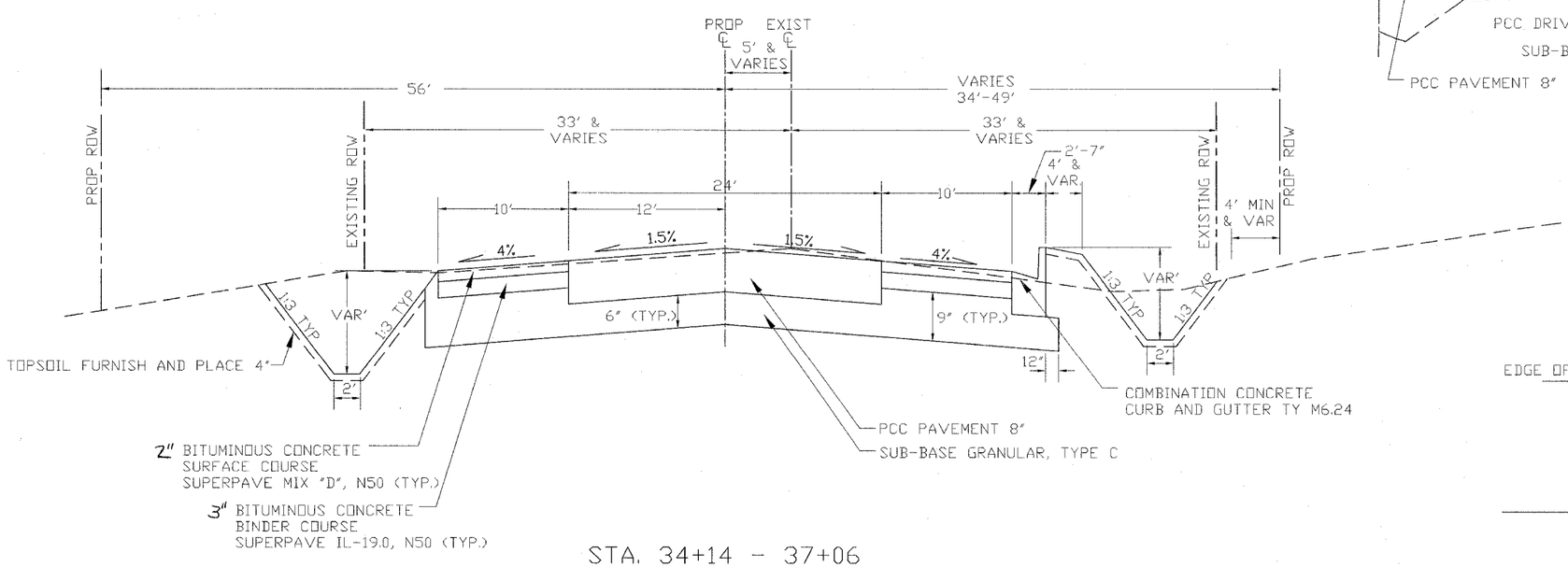

STA. 34+14 - 37+06

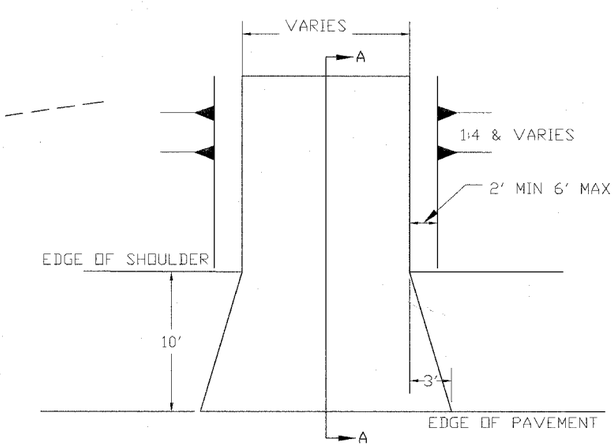

REVISIONS		
No.	DESCRIPTION	DATE

Missman STANLEY & ASSOCIATES, P.C.
Civil Engineering • Environmental Services • GIS • Landscape Architecture • Surveying
1011 27th Avenue Rock Island, Illinois 61201-6040
Phone (309) 788-7644 Fax (309) 788-7691

85TH AVE WEST
ROCK ISLAND, ILLINOIS

85TH AVE PROPOSED TYPICAL SECTIONS

Missman Project No: A-04-T023
File Name: 2037A_TYP.DWG
© COPYRIGHT 2005 ALL RIGHTS RESERVED
Drawn By: WEF
Checked By: DMR
Date: MAY, 2006

G:\RI\2004\A041023-85AVE WEST\dwg\2037A_TYP.dwg, 6/6/2006 8:45:57 AM