F.A.I. RTE.	SECTION	COUNTY	TOTAL SHEETS	SHEET NO.
94	*	COOK	39	11
STA.		TO STA.		
FED. ROAD DIST. NO.	ILLINOIS	FED. AID PROJECT		

* (1516.1, 1717 & 1818) I-5

62934 (17G)

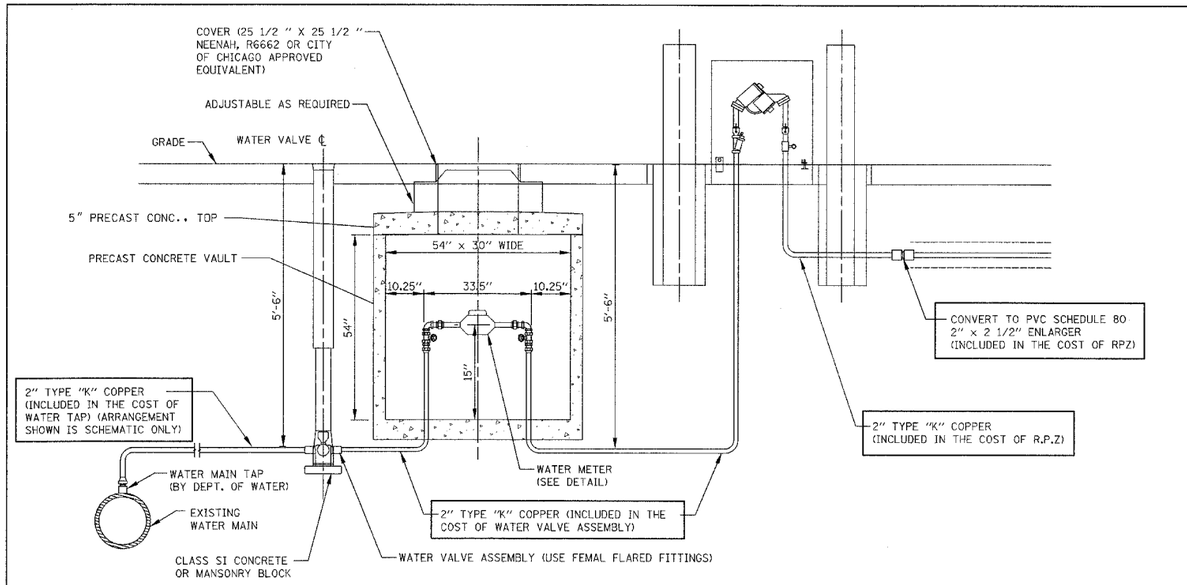

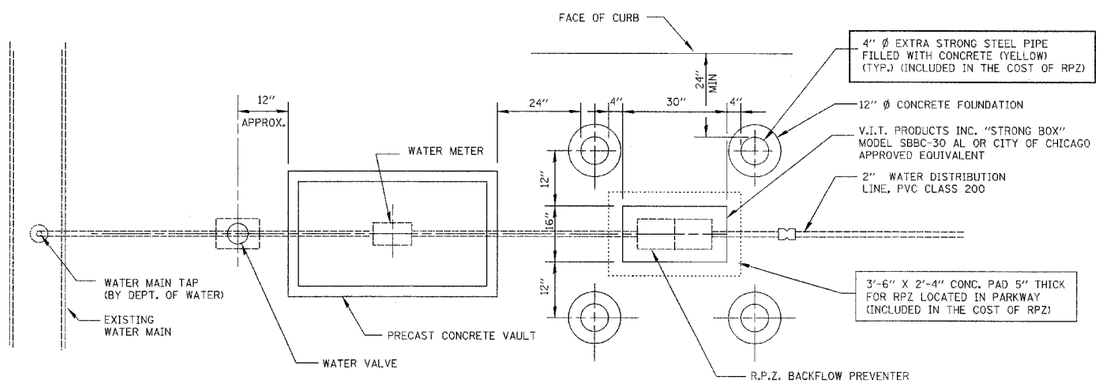

WATER SERVICE CONNECTION PLAN

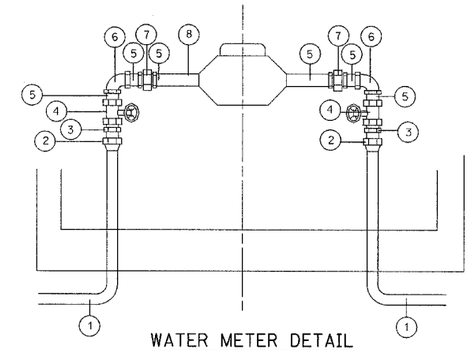

WATER METER DETAIL

NOT TO SCALE

KEY	
1	TYPE K COPPER
2	F.M. FLARED FITTING
3	MALE I.P.T. TO FLARED
4	GATE VALVE
5	BRASS NIP
6	BRASS ELL
7	BRASS UNION
8	METER

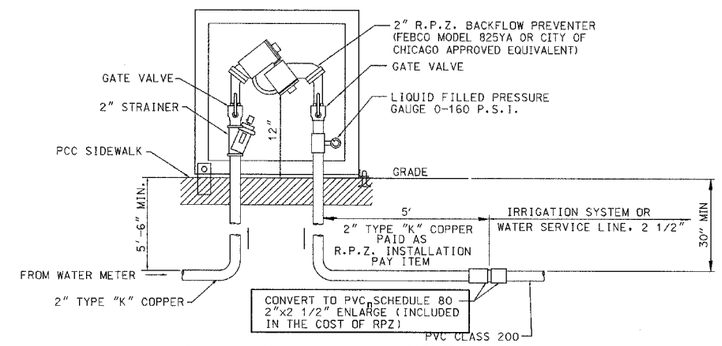

2" R.P.Z. INSTALLATION LAYOUT

NOT TO SCALE

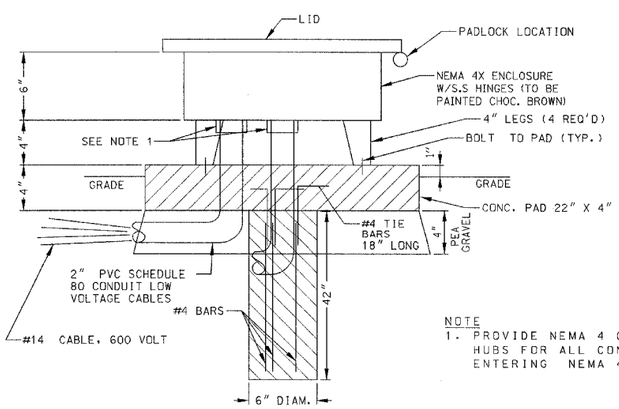

NOTE
1. PROVIDE NEMA 4 CONDUIT HUBS FOR ALL CONDUITS ENTERING NEMA 4X ENCLOSURE

IRRIGATION CONTROLLER NEMA 4X ENCLOSURE - DETAIL

NOT TO SCALE

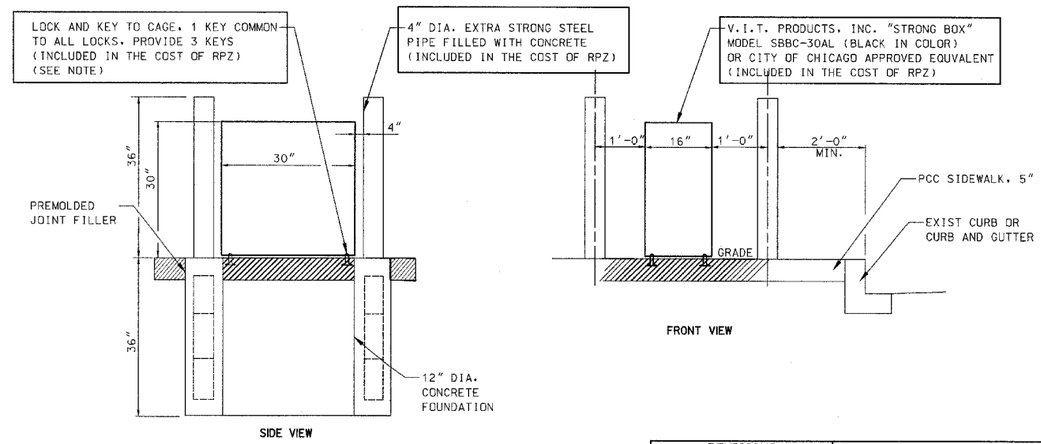

NOTE:
THE CONTRACTOR SHALL COORDINATE THE HARDWARE REQUIREMENTS FOR KEYING OF THE LOCK WITH MR. KEN MARTIN, CITY OF CHICAGO, AT (312) 744-1863.

DETAIL OF BACKFLOW PREVENTER ENCLOSURE AND BOLLARDS

NOT TO SCALE

KNIGHT
Engineers & Architects

REVISIONS	
NAME	DATE
REVISED	05/06/05

ILLINOIS DEPARTMENT OF TRANSPORTATION

F.A.I. 94 (DAN RYAN EXPRESSWAY)

75TH AND 76TH STREET CONSTRUCTION DETAILS

SCALE: NONE — DRAWN BY: WHI

DATE: JULY 8, 2005 — CHECKED BY: JCM

FILE: L:\6592.02\Cad\Sheets\Contract 17g\659202 De10170.dgn