ROUTE NO.	SECTION	COUNTY	TOTAL SHEETS	SHEET NO.
S.B.I. F.A. 3762	01-00139-02-BR	WILL	35	19
FED. ROAD DIST. NO. 1		ILLINOIS	FED. AID PROJECT-	

SHEET NO. S-05

S-13 SHEETS

CONTRACT #: 83802

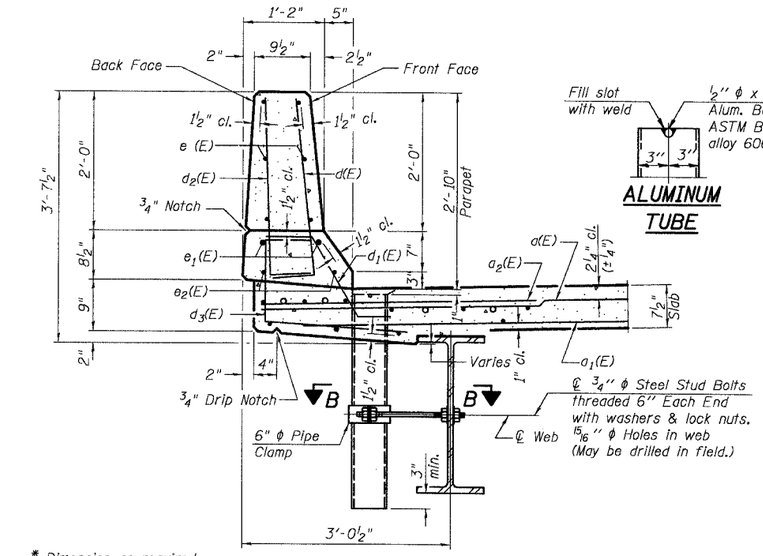

SECTION THRU PARAPET

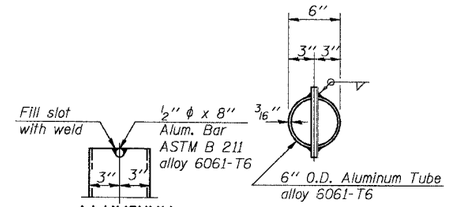

ALUMINUM TUBE

TOP PLAN
(Showing Aluminum Tube)

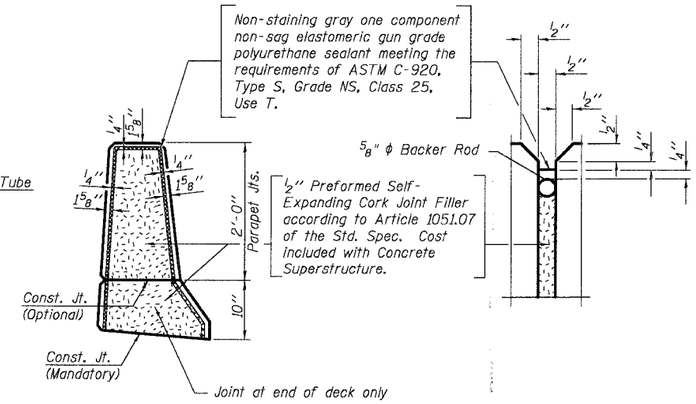

PARAPET JOINT DETAILS

Notes:
1. The exterior surfaces of the floor drains shall be painted with the finish coat as specified in the General Notes on S-02. The exterior surfaces of the drains shall be cleaned according to Steel Structures Painting Council's Spec. SSPC-SP1 prior to painting.
2. The pipe clamp, fabric pad, bolts, washers, nuts, Aluminum bar, and Aluminum tube shall be included in the Pay Item "Floor Drains".

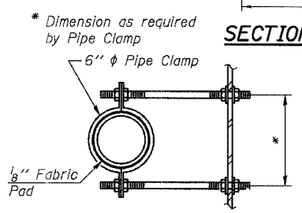

SECTION B-B

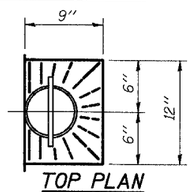

TOP PLAN

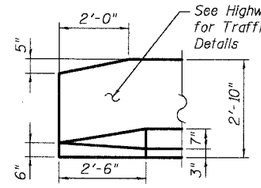

ELEVATION

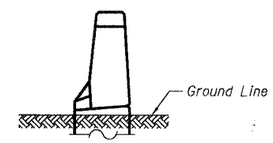

END VIEW

DETAIL B
Not to Scale

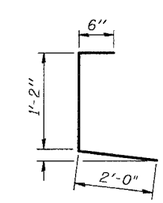

BAR d3(E)

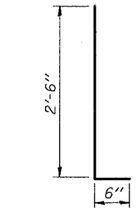

BARS d(E) & d2(E)

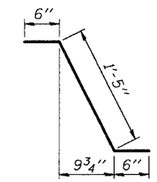

BAR d1(E)

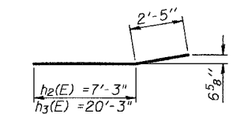

BAR h2(E), h3(E)

SUPERSTRUCTURE BILL OF MATERIAL

Bar	No.	Size	Length	Shape
a (E)	176	# 5	22'-4"	
a1(E)	64	# 5	18'-8"	
a2(E)	88	# 6	4'-6"	
a3(E)	64	# 5	26'-1"	
b (E)	92	# 5	24'-9"	
b1(E)	84	# 5	24'-9"	
d (E)	53	# 5	3'-0"	
d1(E)	106	# 5	2'-5"	
d2(E)	48	# 4	3'-0"	
d3(E)	106	# 4	3'-8"	
e (E)	18	# 4	15'-7"	
e1(E)	4	# 8	25'-11"	
e2(E)	4	# 5	24'-9"	
h (E)	10	# 4	9'-8"	
h1(E)	10	# 4	22'-8"	
h2(E)	2	# 4	9'-8"	
h3(E)	2	# 4	22'-8"	
m (E)	8	# 5	22'-4"	
v (E)	24	# 5	2'-4"	
v1(E)	43	# 5	4'-6"	
Reinforcement Bars, Epoxy Coated			Pound	13,360
Concrete Superstructure			Cu. Yd.	66.3
Protective Coat			Sq. Yd.	65
Floor Drains			Each	8

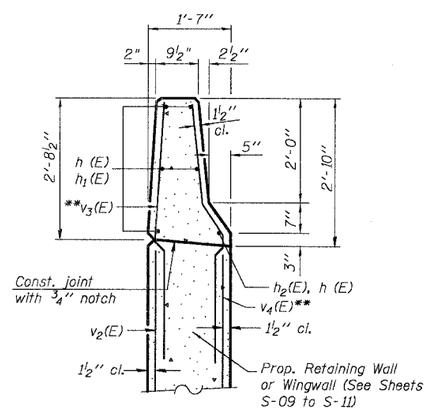

** See Retaining Wall details for v3(E) and v4(E) bars.

SECTION C-C

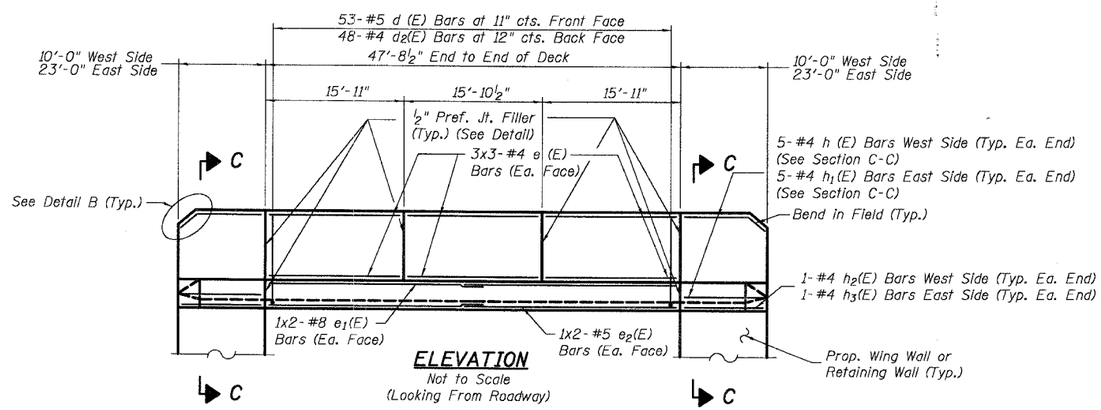

ELEVATION
Not to Scale
(Looking From Roadway)

NOTES:

1. Reinforcement bars designated (E) shall be epoxy coated.
2. Bars indicated thus 1 x 2 -#5 etc. indicates 1 line of bars with 2 lengths per line.
3. Work this sheet with sheet S-04 and S-09 to S-11.

DESIGNED	MGH
CHECKED	RGD
DRAWN	WJH
CHECKED	NRF

SMITH ENGINEERING CONSULTANTS, INC.
CIVIL-STRUCTURAL ENGINEERS AND SURVEYORS
www.smithengineering.com
e-mail: info@smithengineering.com

REVISIONS

NAME	DATE

ILLINOIS DEPARTMENT OF TRANSPORTATION

Parapet Elevations, Details and Drain Details
Harlem Avenue/Drecksler Road
Over Black Walnut Creek
Will County
Section 01-00139-02-BR
SN. 099-3091

DATE 5-26-2005