STATE OF ILLINOIS
DEPARTMENT OF TRANSPORTATION

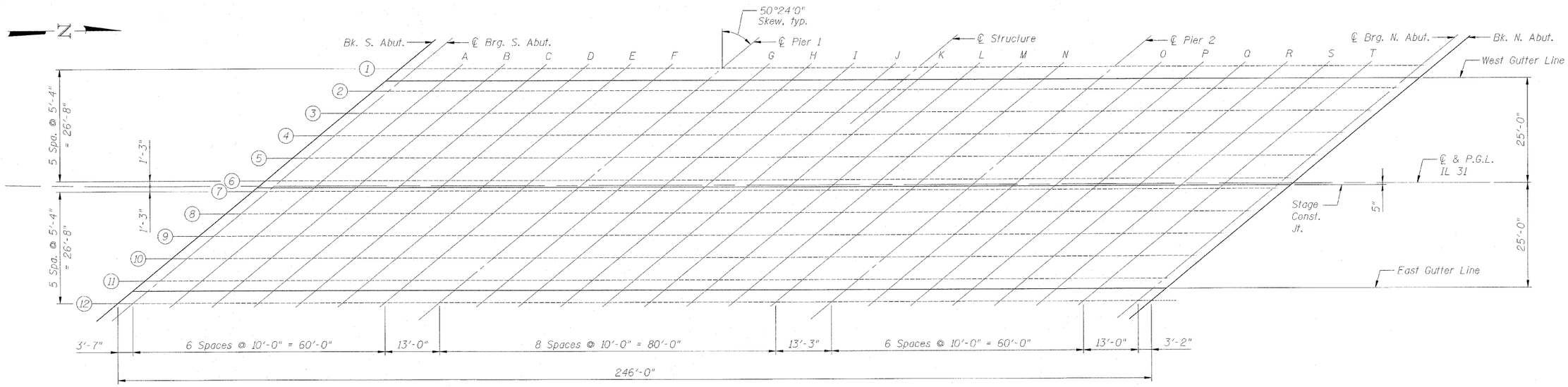

PLAN

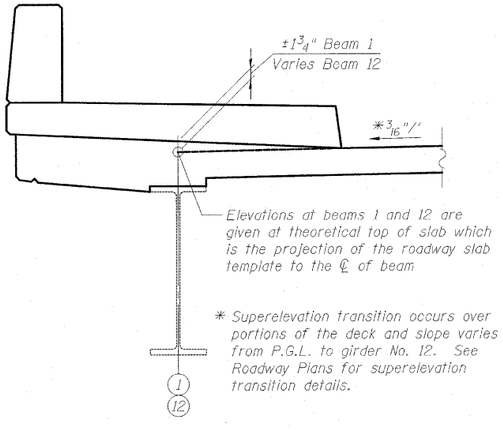

Elevations at beams 1 and 12 are given at theoretical top of slab which is the projection of the roadway slab template to the ℄ of beam

* Superelevation transition occurs over portions of the deck and slope varies from P.G.L. to girder No. 12. See Roadway Plans for superelevation transition details.

PROJECTION UNDER SIDEWALK DETAIL

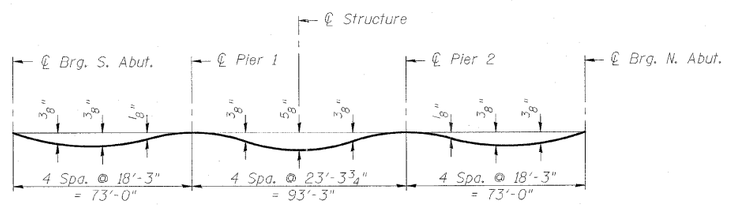

DEAD LOAD DEFLECTION DIAGRAM

(Includes weight of concrete only.)

Note:
The above deflections are not to be used in the field if the engineer is working from the grade elevations adjusted for dead load deflections as shown on sheets S-7 thru S-9 of S-34.

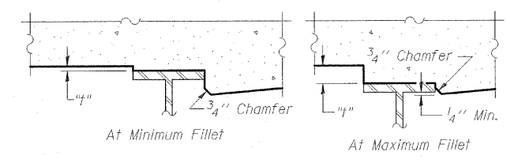

To determine "t": After all structural steel has been erected, elevations of the top flanges of the beams shall be taken at intervals shown below. These elevations subtracted from the "Theoretical Grade Elevations Adjusted for Dead Load Deflection" shown on sheets S-7 thru S-9 of S-34, minus slab thickness, equals the fillet heights "t" above top flange of beams.

FILLET HEIGHTS

DESIGNED	TAH
CHECKED	DF
DRAWN	LAM
CHECKED	DF

BOWMAN, BARRETT & ASSOCIATES INC.
CONSULTING ENGINEERS
Chicago, Illinois
312.228.0100
www.bbandainc.com
Job. No. 910

TOP OF SLAB ELEVATIONS LAYOUT
STRUCTURE NO. 045-0016

SHEET NO. S-6	F.A.U. RTE.	SECTION	COUNTY	TOTAL SHEETS	SHEET NO.
S-34 SHEETS	3887	R-VB-R	KANE	83	40
			CONTRACT NO. 60C06		
	FED. ROAD DIST. NO. 1	ILLINOIS	FED. AID PROJECT		