NOTES:

* EXACT PLACEMENT OF TEMPORARY WOOD POSTS TO BE DETERMINED IN THE FIELD BY THE RESIDENT ENGINEER.

* ALL VIDEO DETECTION ZONES ARE TO BE REDEFINED DURING EACH STAGE OF CONSTRUCTION AND ARE INCIDENTAL TO THE COST OF TEMPORARY BRIDGE TRAFFIC SIGNAL INSTALLATION.

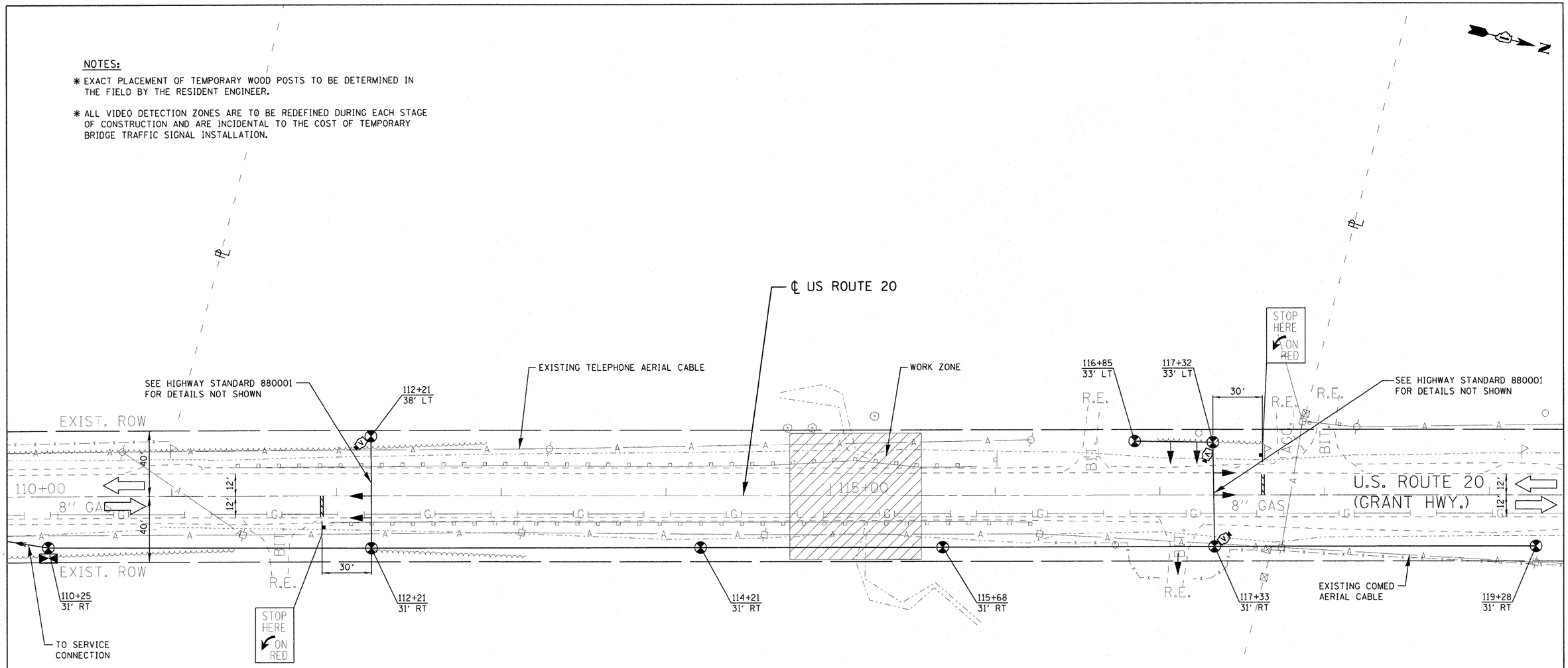

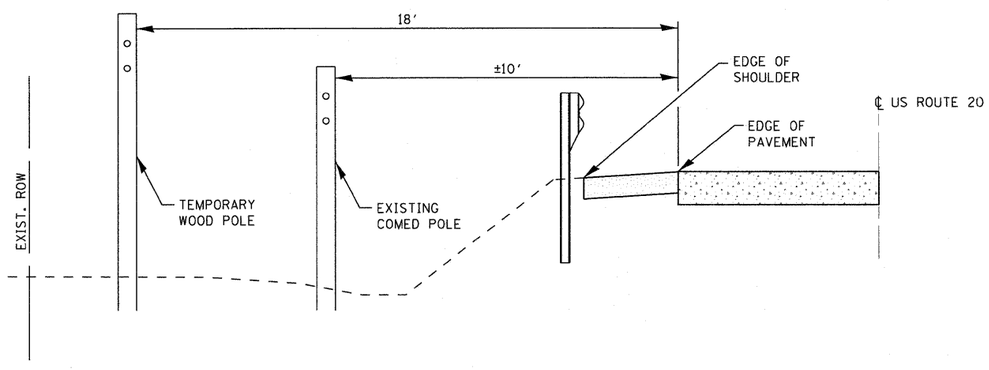

CROSS SECTION DETAIL

NOT TO SCALE
LOOKING SOUTH

THIS SHEET TO BE WORKED WITH DISTRICT 1 DETAIL "TEMPORARY LIGHTING AND TRAFFIC SIGNALS FOR SINGLE LANE STAGING" AND THE MAINTENANCE OF TRAFFIC PLANS.

TEMPORARY TRAFFIC SIGNAL LEGEND

- TEMPORARY WOOD POLE NOMINAL 60 FT, CLASS 4
- TEMPORARY TRAFFIC SIGNAL HEAD SPAN WIRE MOUNTED
- TEMPORARY SPAN WIRE TETHER WIRE, AND CABLE
- VIDEO DETECTION CAMERA
- TEMPORARY CONTROLLER CABINET

FILE NAME = G:\projects\2102155.003\CADD\Civil\Sht\D160M53-13sht-Signal01.dgn

ENTRAN

USER NAME = 2KUJAWC	DESIGNED - DJB	REVISED -	
	DRAWN - ENTRAN	REVISED -	
PLOT SCALE - 30.00 ' / IN.	CHECKED - TMH	REVISED -	
PLOT DATE = 06/27/2011	DATE - 06/24/11	REVISED -	

STATE OF ILLINOIS
DEPARTMENT OF TRANSPORTATION

FAP ROUTE 525 (US ROUTE 20) OVER DRAINAGE DITCH
TEMPORARY TRAFFIC SIGNAL PLAN

SCALE: 1" = 30' | SHEET NO. OF SHEETS | STA. TO STA.

F.A.P. RTE.	SECTION	COUNTY	TOTAL SHEETS	SHEET NO.
525	11-T-1	McHENRY	34	13
		CONTRACT NO. 60M53		

FED. ROAD DIST. NO. | ILLINOIS | FED. AID PROJECT