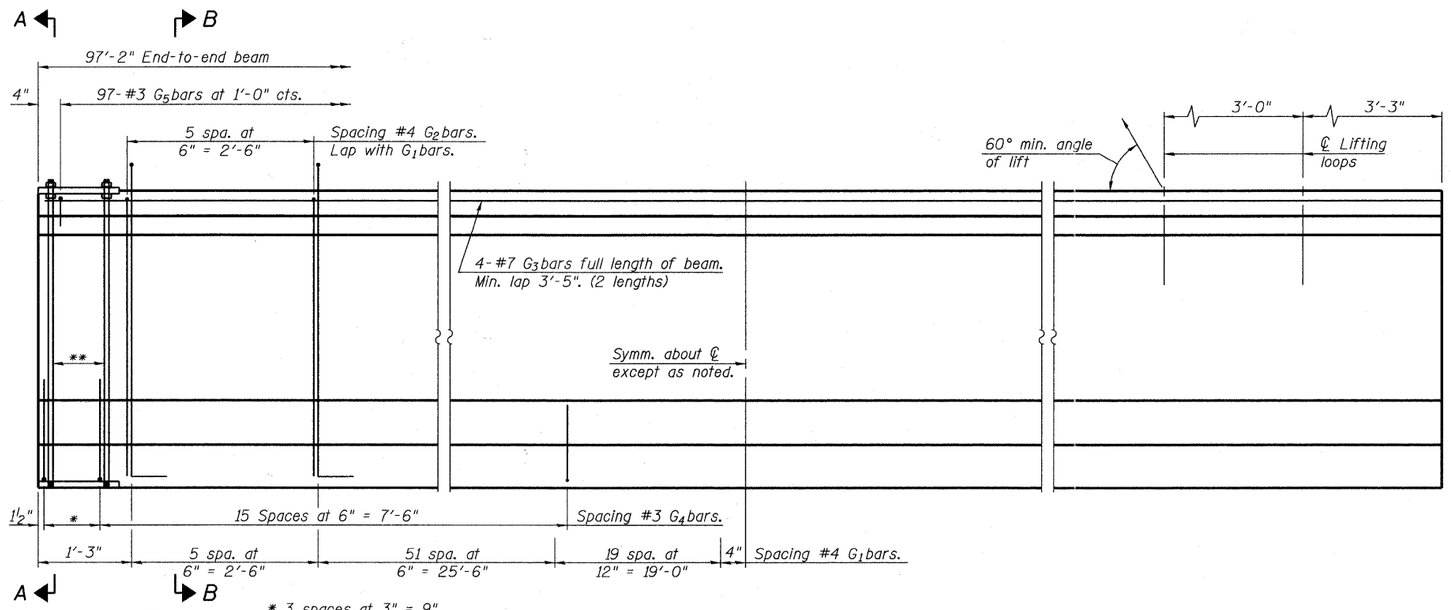


* 3 spaces at 3" = 9".
** 4-¾" ϕ threaded dowel rods at 3" cts., Each Face.

## ELEVATION OF BEAM
(Showing reinforcement & dimensions)

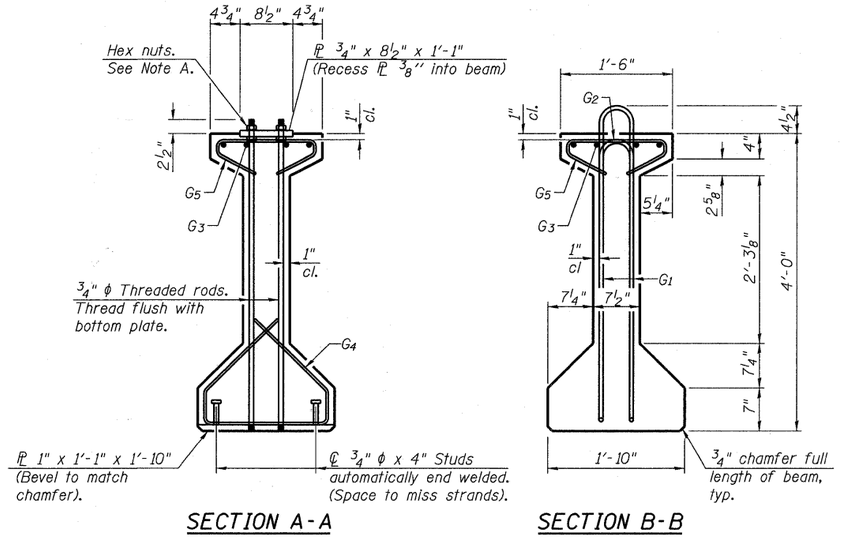


## SECTION A-A

## SECTION B-B

Note A:
Hex nuts (top and bottom) with lock washers (top). Only tighten sufficiently to compress lock washers.

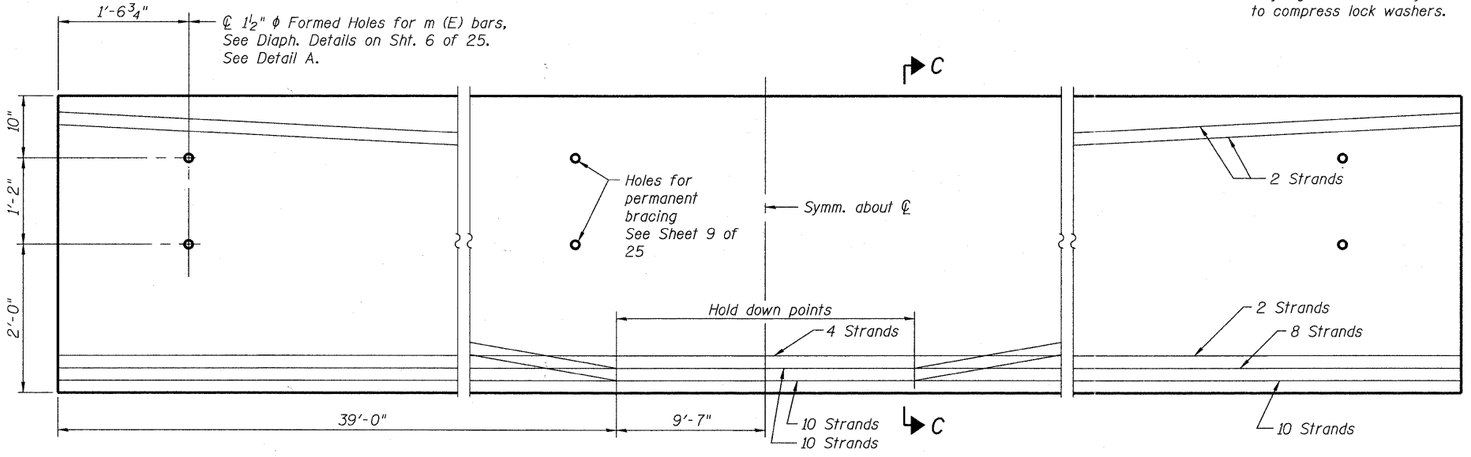


## ELEVATION OF BEAM
(Showing prestressing steel)

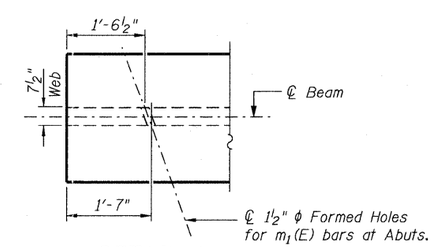


## DETAIL A

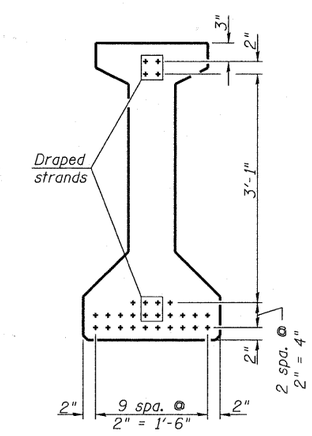


## SECTION C-C

## ***BAR LIST
## ONE BEAM ONLY

| Bar | No. | Size | Length | Shape |
|---|---|---|---|---|
| $G_1$ | 152 | #4 | 9'-6" | |
| $G_2$ | 12 | #4 | 7'-11" | |
| $G_3$ | 8 | #7 | 50'-4" | |
| $G_4$ | 38 | #3 | 5'-3" | |
| $G_5$ | 97 | #3 | 2'-9" | |
| | | | | |

***For information only

Notes:
See sheet 11 of 25 for additional details and Bill of Material.
Required release strength, f'ci, shall be 5,000 psi.

PI-4-48 7-1-10

FILE NAME = w:\756-004_lombard - gwt bridges phase ii\cadd sheets\structural\grace\0223120-010-48 I-BEAMDETAILS 1.dgn

| | | | | | | | | | |
|---|---|---|---|---|---|---|---|---|---|
| Bollinger, Lach & Associates, Inc. ITASCA, ILLINOIS | USER NAME = gonzalo | DESIGNED JJI SRT | REVISED - | STATE OF ILLINOIS GREAT WESTERN TRAIL GRACE STREET | 48" PPC I-BEAM STRUCTURE NO. 022-3120 | F.A. RTE. | SECTION | COUNTY | TOTAL SHEETS / SHEET NO. |
| | | CHECKED SRTJJI | REVISED - | | | | 06-00151-00-BR | DuPAGE | 201 / 62 |
| | PLOT SCALE = | DRAWN GM GM | REVISED - | | | | | CONTRACT NO. 63568 | |
| | PLOT DATE = 7/26/2011 | CHECKED SRTJJI | REVISED - | | SHEET NO. 10 OF 25 SHEETS | | | ILLINOIS FED. AID PROJECT | |