WITNESS MARKER FOR PERMANENT SURVEY MARKERS, TYPE II

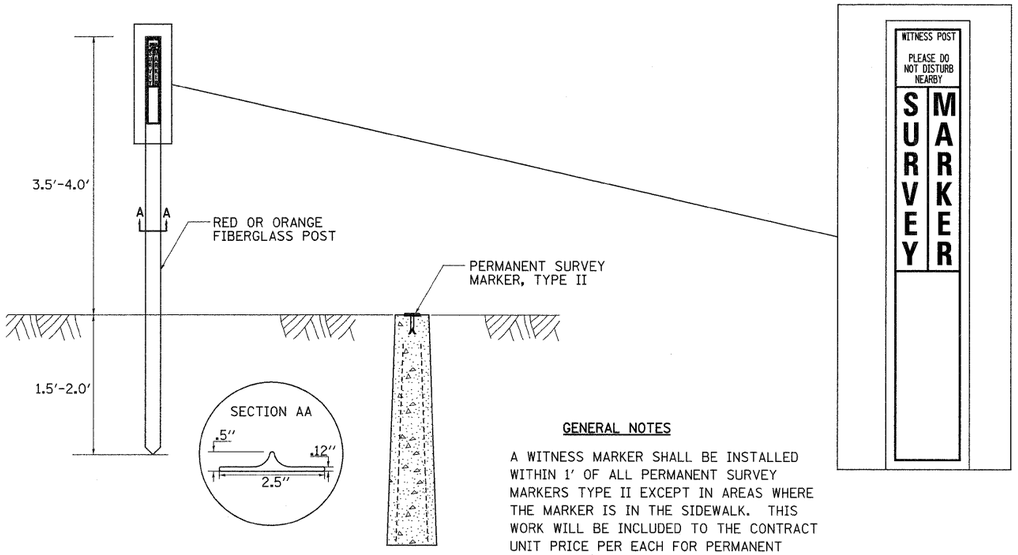

GENERAL NOTES

A WITNESS MARKER SHALL BE INSTALLED WITHIN 1' OF ALL PERMANENT SURVEY MARKERS TYPE II EXCEPT IN AREAS WHERE THE MARKER IS IN THE SIDEWALK. THIS WORK WILL BE INCLUDED TO THE CONTRACT UNIT PRICE PER EACH FOR PERMANENT SURVEY MARKERS, TYPE II.

PERMANENT SURVEY MARKERS, TYPE II

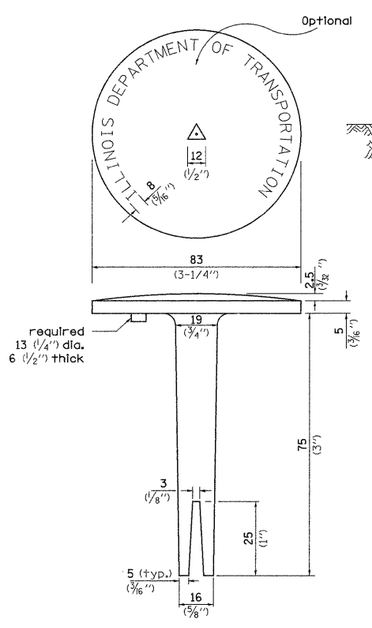

BRASS OR ALUMINUM TABLET

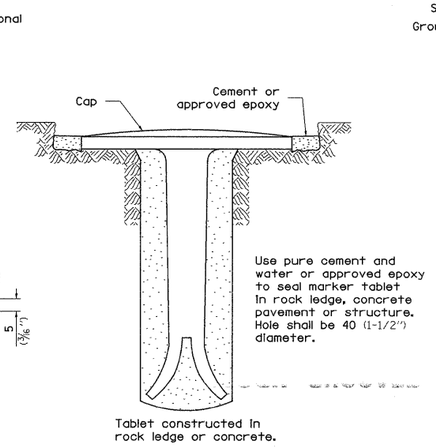

TYPE II

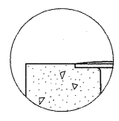

DETAIL A

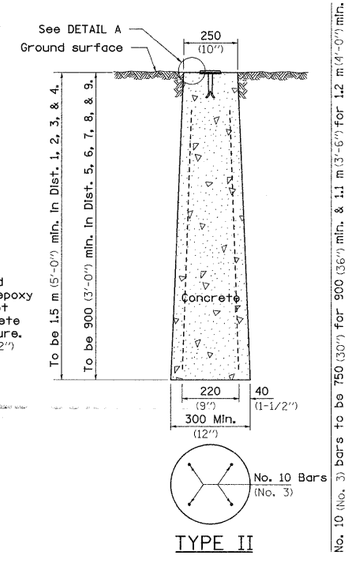

TYPE II

CAST-IN-PLACE MARKER

ALL DIMENSIONS ARE IN MILLIMETERS (INCHES) UNLESS OTHERWISE NOTED.

NAME PLATE FOR CULVERTS

FOR 24"-42" PIPE CULVERTS

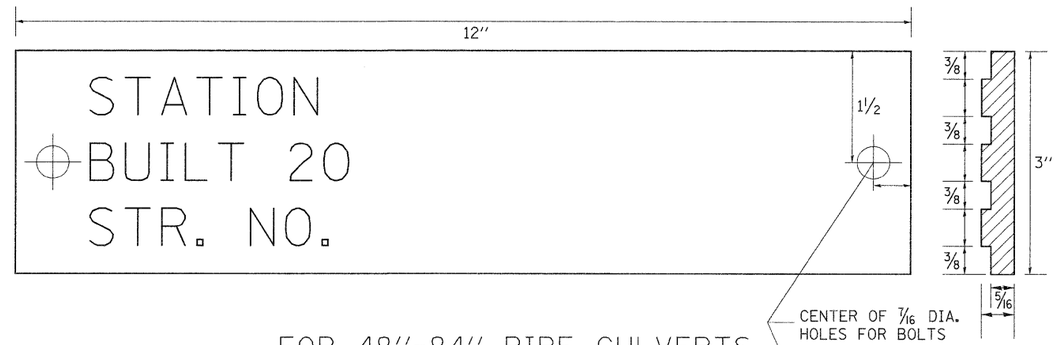

FOR 48"-84" PIPE CULVERTS

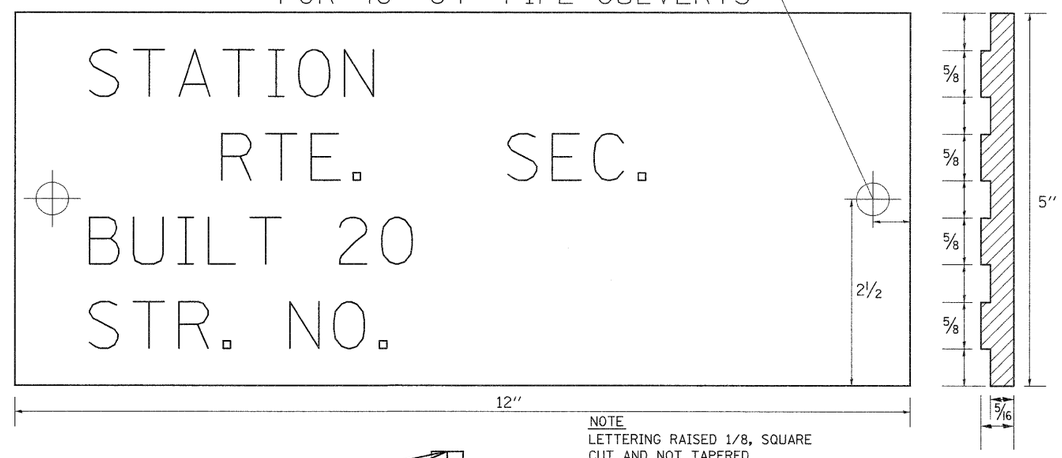

NOTE
LETTERING RAISED 1/8, SQUARE CUT AND NOT TAPERED

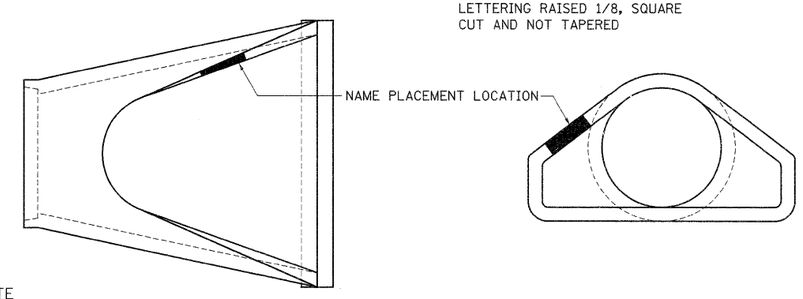

DESIGNERS NOTE

NAME PLATES SHALL BE FURNISHED & INSTALLED ACCORDING TO SECTION 515 OF THE STANDARD SPECIFICATIONS, EXCECT 2 BOLTS SHALL BE USE TO FASTEN THE PLATE TO THE END SECTION.

USE STANDARD 515001 FOR BRIDGES AND MULTI-CELL CULVERTS WITH SPANS OF 20' OR MORE MEASURED ALONG THE CENTERLINE AT THE HIGHWAY.

USE THIS DETAIL FOR ALL OTHER PIPE CULVERTS & BOX CULVERTS WITH STRUCTURE NUMBERS. INCLUDE THE INFORMATION TO FILL OUT THE NAME PLATE FOR EACH CULVERT.

IN BOTH CASES INCLUDE A PAY ITEM FOR NAME PLATES.

STATION	STRUCTURE NO.
STA. 23+03	066-2501
STA. 138+19	066-2502
STA. 304-96	081-1134
STA. 323+50	081-1133
STA. 363+65	081-1132

* 221,213 & 220
** ROCK ISLAND & MERCER COUNTY

REVISED -	REGION 2 / DISTRICT 2 STANDARD	F.A.S. RTE.	SECTION	COUNTY	TOTAL SHEETS	SHEET NO.
REVISED -		*	(19,20)RS-2	**	231	92
REVISED -				CONTRACT NO. 64D72		
REVISED -	SCALE: 50.0000 ' / in. SHEET NO. OF SHEETS STA. TO STA.	FED. ROAD DIST. NO.	ILLINOIS	FED. AID PROJECT		

PLOT DATE = Thu Jun 23 08:02:28 2011