STATE OF ILLINOIS
DEPARTMENT OF TRANSPORTATION

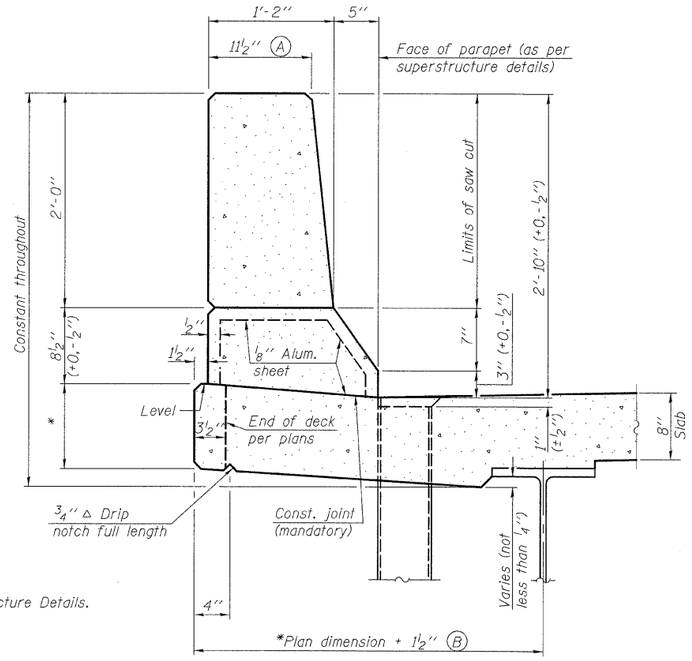

* See Superstructure Details.

SECTION
(Showing dimensions)

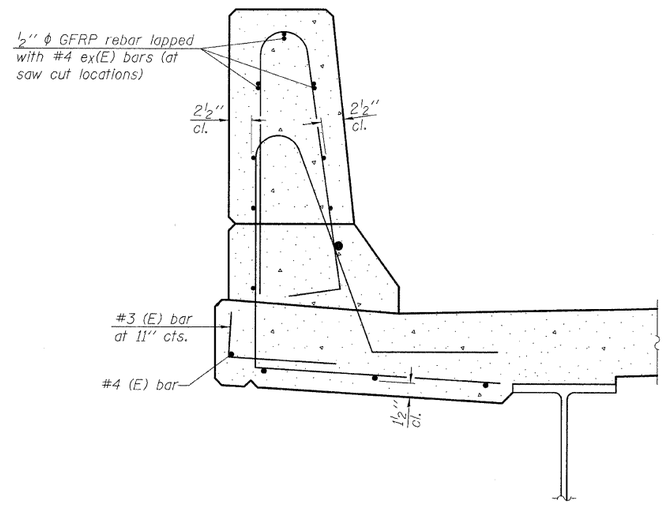

SECTION
(Showing reinforcement clearances for slip forming and additional reinforcement bars)

GENERAL NOTES

All dimensions shall remain the same as shown on superstructure details, except dimensions A and B which are to be revised as shown to provide additional clearance. Additional concrete needed to revise dimension A and B = 0.0165 cu. yds./ft. of parapet.

Place aluminum sheet in curb portion at and near piers. Full thickness saw cut at all joint locations in lieu of cork joint filler.

Steel superstructure shown. Other superstructure types similar.

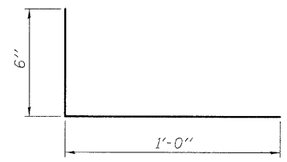

#3 (E) BAR

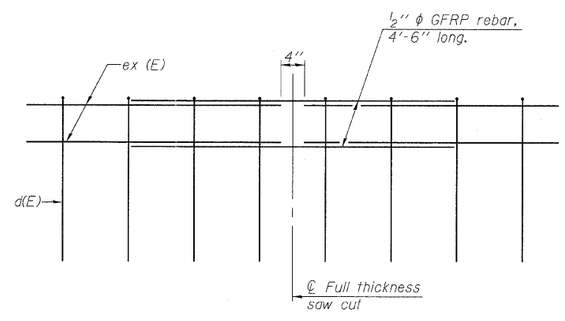

GFRP REBAR STIFFENING DETAIL
(Place as shown in parapet section at each parapet joint location.)

CONCRETE PARAPET
SLIPFORMING OPTION
STRUCTURE NO. 014-0079

DESIGNED	KAK
CHECKED	EML
DRAWN	KAK
CHECKED	EML

SFP-34 11-1-09

HORNER & SHIFRIN, INC. ENGINEERS

SHEET NO. 24	F.A.P. RTE.	SECTION	COUNTY	TOTAL SHEETS	SHEET NO.
25 SHEETS	690	481B	CLINTON	46	41
			CONTRACT NO. 76C21		
	FED. ROAD DIST. NO.	ILLINOIS	FED. AID PROJECT		