STATE OF ILLINOIS
DEPARTMENT OF TRANSPORTATION

F.A.I. RTE.	SECTION	COUNTY	TOTAL SHEETS	SHEET NO.
90/94	*	COOK	556	374
STA.	TO STA.			
FED. ROAD DIST. NO. 1	ILLINOIS	FED. AID PROJECT		

* (1818, ETC, 2324.6-1P)R-8 62300

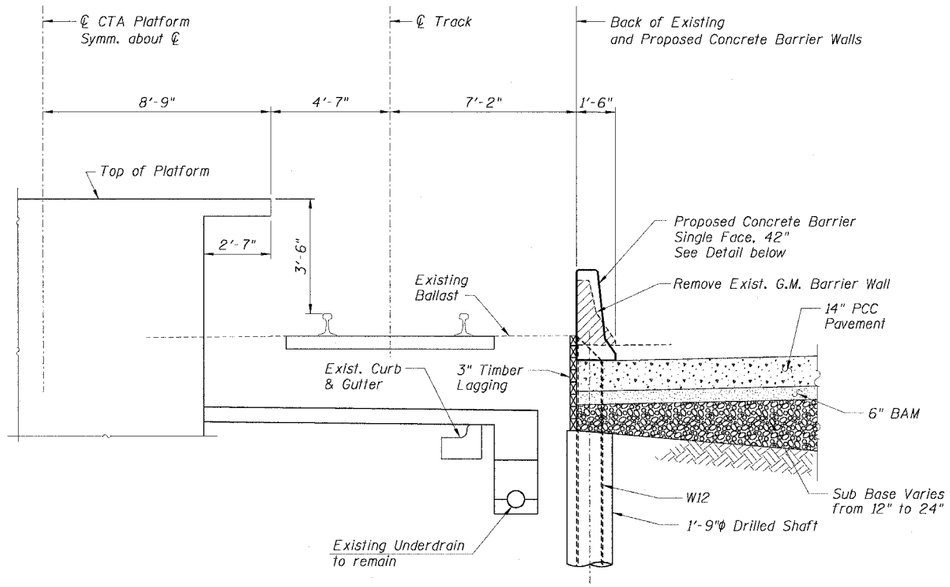

TYPICAL SECTION
AT 69TH ST. STATION (SB)

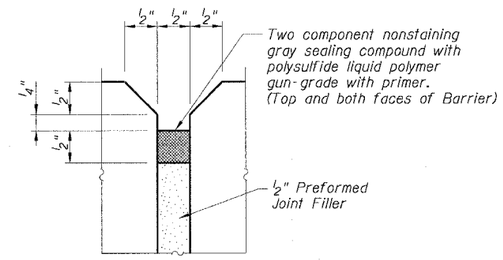

EXPANSION JOINT DETAIL

BILL OF MATERIAL

Bar	No.	Size	Length	Shape

Item	Unit	Quantity
Concrete Barrier Removal	Foot	
Furnishing Soldier Piles W12x__	Foot	
Drilling and Setting Soldier Piles (in Soil)	Cu. Ft.	
Untreated Timber Lagging	Sq. Ft.	
Concrete Barrier Single Face, 42" (Special)	Foot	
Protective Coat	Sq. Yd.	

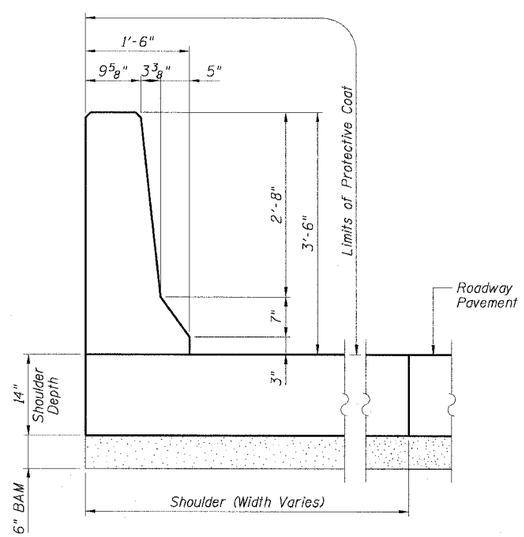

CONCRETE BARRIER
SINGLE FACE, 42"
(DIMENSIONS)

NOTES:

1. See "Concrete Barrier Single Face, 42" (Special)" for reinforcing details.
2. Provide construction joints in the Single Face, 42" Barrier on maximum of 30'-0" centers.
3. Provide ½" expansion joints in the Concrete Barrier Single Face, 42" on maximum of 90'-0" centers.
4. The cost of furnishing and installing sealing compound shall be included in the cost per cubic yard for Concrete Barrier Single Face, 42" (Special).

LEGEND:

- Concrete Removal
- PCC Pavement
- BAM
- Sub Base
- Earth

Sheet B6 of 16

REVISIONS	
NAME	DATE
MJP	8-12-05

ILLINOIS DEPARTMENT OF TRANSPORTATION
F.A.I. 90/94 (DAN RYAN EXPRESSWAY)
71ST STREET TO 31ST STREET (NB EXPRESS LANES)
EXISTING BARRIER WALL MODIFICATIONS
AT CTA STATIONS
TYPICAL SECTIONS & DETAILS
FOR 69TH ST. STATION (SB)

SCALE: None DRAWN BY: KWT
DATE: July 7, 2005 CHECKED BY: RDP

CTE | AECOM

p:\P40468\Struct\E&K_Dwgs\Cntr_62300\03_CTA-Barrier\RT09B062A-CTA.sht 8/10/2005 9:13:47 AM