SECTION	COUNTY	TOTAL SHEETS	SHEET NO.
08-00178-02-BT	COOK	64	1
FED. ROAD DIST. NO. ILLINOIS	CONTRACT NO. 61C12		

FOR INDEX OF SHEETS, SEE SHEET NO. 2

STATE OF ILLINOIS 11-04-2016 LETTING ITEM 113
DEPARTMENT OF TRANSPORTATION
DIVISION OF HIGHWAYS

PLANS FOR PROPOSED FEDERAL AID HIGHWAY

CAL–SAG GREENWAY TRAIL
BLUE ISLAND EAST SEGMENT
ASHLAND AVENUE TO HALSTED STREET AND 134TH STREET

SECTION NO. 08–00178–02–BT
PROJECT NO. TE-01D1 (059)
CITY OF BLUE ISLAND
COOK COUNTY
JOB NO: C91–091–16

PROJECT LOCATED IN THE THE CITY OF BLUE ISLAND

DESIGN SPEED
20 MPH

CLASSIFICATION
BIKE TRAIL

DESIGN DESIGNATION
BIKE PATH

POSTED SPEED LIMIT
BIKE PATH 20 M.P.H.

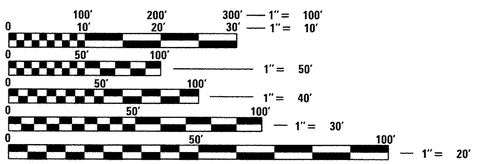

FULL SIZE PLANS HAVE BEEN PREPARED USING STANDARD ENGINEERING SCALES. REDUCED SIZED PLANS WILL NOT CONFORM TO STANDARD SCALES. IN MAKING MEASUREMENTS ON REDUCED PLANS, THE ABOVE SCALES MAY BE USED.

J.U.L.I.E.
JOINT UTILITY LOCATION INFORMATION FOR EXCAVATION
1–800–892–0123
OR 811

BRIAN M. CZOSNYKA 062 059100 REGISTERED PROFESSIONAL ENGINEER STATE OF ILLINOIS

BRIAN M. CZOSNYKA, P.E.
EXPIRES: NOVEMBER 30, 2017
FOR SHEETS 1-22 & 37-64 ONLY

STATE OF ILLINOIS DONALD E. YETTER 081-004709 NAPERVILLE, IL LICENSED STRUCTURAL ENGINEER

Donald E Yetter 8/4/16
DONALD E. YETTER, P.E., S.E.
LICENSE NO.: 081-004709
EXPIRES: NOVEMBER 30, 2016
FOR SHEETS 29-36 ONLY

STATE OF ILLINOIS ARSALAN M. KHAN 081-006258 CHICAGO LICENSED STRUCTURAL ENGINEER

8/4/16
ARSALAN M. KHAN, S.E.
LICENSE NO.: 081-006258
EXPIRES: NOVEMBER 30, 2016
FOR SHEETS 27 & 28 ONLY

DANIEL A. DUZAN 062-059108 LICENSED PROFESSIONAL ENGINEER OF ILLINOIS

8/4/16
DANIEL DUZAN, P.E.
EXPIRES: NOVEMBER 30, 2017
FOR SHEETS 23-26 ONLY

PROGRAM AND OFFICE ENGINEER: CHARLES F. RIDDLE, P.E., 847–705–4406, SCHAUMBURG, IL

R14E CALUMET TOWNSHIP 3RD P.M.

T37N

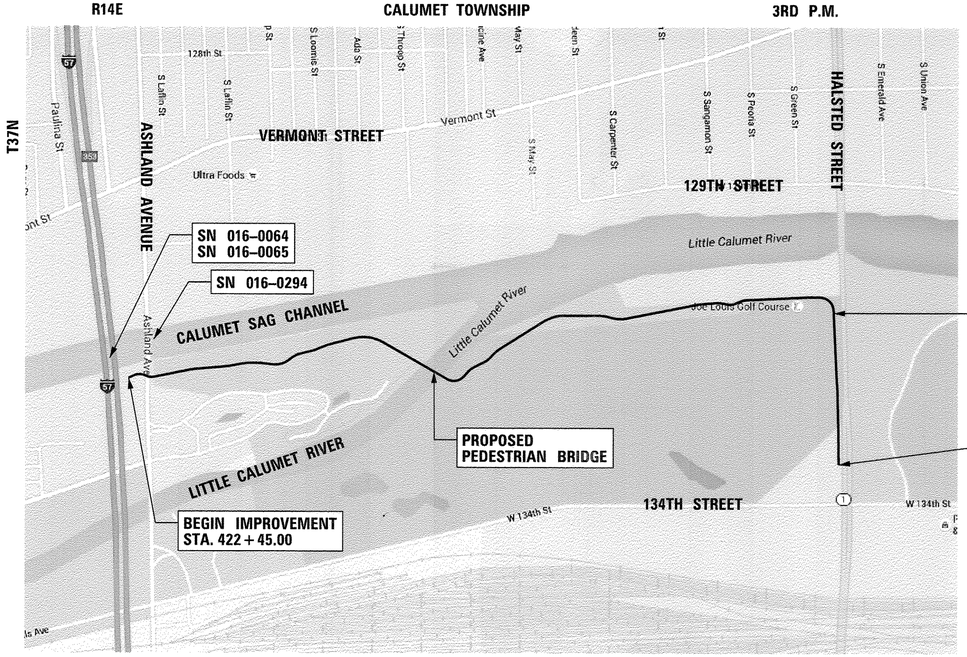

LOCATION MAP
(NOT TO SCALE)

GROSS AND NET LENGTH OF PROJECT = 6,969.67 FT = 1.32 MI

LOCATION OF SECTION INDICATED THUS: –

STATE OF ILLINOIS
DEPARTMENT OF TRANSPORTATION
DIVISION OF HIGHWAYS

Approved August 15 20 16
Martin J Quillman
CITY OF BLUE ISLAND

Approved Aug 11 20 2016
Chris Slattery
FOREST PRESERVE OF COOK COUNTY

Passed September 6 20 16
Christopher Holt
DISTRICT #1 ENGINEER OF LOCAL ROADS AND STREETS

Releasing for Bid Based on Limited Review September 6 20 16
John Fortmann
REGIONAL ENGINEER

PRINTED BY THE AUTHORITY OF THE STATE OF ILLINOIS

PLANS PREPARED BY:

AECOM
303 East Wacker Drive
Suite 1400, Chicago, IL 60601
T 1-312-373-7700 F 1-312-373-6800

CONTRACT NO. 61C12

INDEX OF SHEETS

1	TITLE SHEET
2	INDEX OF SHEETS, GENERAL CONSTRUCTION NOTES & STATE STANDARDS
3-5	SUMMARY OF QUANTITIES
6-7	SCHEDULES
8	TYPICAL SECTIONS
9	ALIGNMENT INFORMATION
10-15	PLAN AND PROFILE
16-22	DETAILS
23-26	PEDESTRIAN BRIDGE LIGHTING SHEETS
27-28	SLOPEWALL MODIFICATION SHEETS
29-36	PEDESTRAIN BRIDGE SHEETS
37-40	DISTRICT ONE STANDARDS
41-64	CROSS SECTIONS - BLUE ISLAND EAST

HIGHWAY STANDARDS

000001-06	STANDARD SYMBOLS, ABBREVIATIONS AND PATTERNS
280001-07	TEMPORARY EROSION CONTROL SYSTEMS
424001-08	PERPENDICULAR CURB RAMPS FOR SIDEWALKS
424026-01	ENTRANCE / ALLEY PEDESTRIAN CROSSINGS
542301-03	PRECAST REINFORCED CONCRETE FLARED END SECTION
542306-03	PRECAST REINFORCED CONCRETE ELLIPTICAL FLARED END SECTION
606001-06	CONCRETE CURB TYPE B AND COMBINATION CONCRETE CURB AND GUTTER
664001-02	CHAIN LINK FENCE
701006-05	OFF-RD OPERATIONS, 2L, 2W, 15' TO 24" FROM PAVEMENT EDGE
701101-05	OFF-RD OPERATIONS, MULTILANE, 15' TO 24" FROM PAVEMENT EDGE
701606-10	URBAN LANE CLOSURE, MULTILANE, 2W WITH MOUNTABLE MEDIAN
701701-10	URBAN LANE CLOSURE, MULTILANE INTERSECTION
701901-05	TRAFFIC CONTROL DEVICES
720001-01	SIGN PANEL MOUNTING DETAILS
720006-04	SIGN PANEL ERECTION DETAILS
720011-01	METAL POSTS FOR SIGNS, MARKERS AND DELINEATORS
729001-01	APPLICATIONS OF TYPES A AND B METAL POSTS (FOR SIGNS & MARKERS)

DISTRICT ONE DETAILS

BD-24	CURB AND GUTTER REMOVAL AND REPLACEMENT
BD-51	BENCHING DETAIL FOR EMBANKMENT WIDENING
TC-10	TRAFFIC CONTROL AND PROTECTION FOR SIDE ROADS, INTERSECTIONS AND DRIVEWAYS
TC-13	DISTRICT ONE TYPICAL PAVEMENT MARKINGS

CONSTRUCTION ACCESS LOCATIONS

THE CONSTRUCTION ACCESS LOCATIONS SHALL AVOID WETLAND, WETLAND BUFFER AND RIPARIAN AREAS.

PRESERVATION PLAN - FEATURE 127, JOE LOUIS SITE (11CK284) (EXISTING HUMAN BURIAL GROUND)

1. THE BURIAL IS LOCATED AT APPROXIMATE STATION 452+00.00, 20 FEET SOUTH OF THE CENTERLINE OF PROPOSED TRAIL.

2. THE BURIAL IS SITUATED ABOUT 4 FEET BELOW THE CURRENT GROUND SURFACE. GEOTECHNICAL FABRIC WILL BE SPREAD ACROSS THE AREA AFTER THE TOP FEW INCHES OF ORGANIC MATERIAL IS REMOVED. ONE (1) FOOT OF FILL WILL BE PLACED ATOP THE FABRIC IN THE BURIAL AREA, FOLLOWED BY 6 INCHES OF TOPSOIL.

3. THE AREA WILL BE PLANTED IN GRASS. NO TREES WILL BE PLANTED IN THE AREA OF THE BURIAL.

4. ARCHAEOLOGISTS FROM ILLINOIS STATE ARCHAEOLOGICAL SURVEY WILL MONITOR ALL EARTHMOVING AND TRAIL CONSTRUCTION IN THE BURIAL AREA.

5. PAYMENT FOR THE ABOVE WORK FOR THE PRESERVATION PLAN INCLUDED IN THE COST OF REMOVAL AND DISPOSAL OF UNSUITABLE MATERIAL.

GENERAL CONSTRUCTION NOTES

GENERAL NOTES

THE CONTRACTOR SHALL CONTACT THE DISTRICT ONE TRAFFIC CONTROL SUPERVISOR AT 847-705-4470 A MINIMUM OF 72 HOURS IN ADVANCE OF BEGINNING WORK.

BEFORE STARTING ANY EXCAVATION, THE CONTRACTOR SHALL CALL "JULIE" AT 800-892-0123 FOR FIELD LOCATIONS OF BURIED UTILITY FACILITIES. (48 HOURS NOTIFICATION IS REQUIRED).

ALL STATION-OFFSET CALL OUTS AND CURVE DATA ON THE PLANS REFER TO THE PROPOSED CENTERLINE UNLESS OTHERWISE SHOWN.

IT IS THE CONTRACTOR'S RESPONSIBILITY TO VERIFY ALL DIMENSIONS.

ANY WORK ON HOLIDAYS AND WEEKENDS WILL NEED PRIOR APPROVAL FROM THE DISTRICT.

SPECIFICATIONS

ALL CONSTRUCTION SHALL BE DONE IN ACCORDANCE WITH THE "STANDARD SPECIFICATIONS FOR ROAD AND BRIDGE CONSTRUCTION", ADOPTED APRIL 1, 2016, THE "STANDARD SPECIFICATIONS FOR WATER AND SEWER MAIN CONSTRUCTION IN ILLINOIS", 2014, 7TH EDITION, THE "MANUAL ON UNIFORM TRAFFIC CONTROL DEVICES FOR STREETS AND HIGHWAYS", LATEST EDITION, THE DETAILS INCLUDED IN THE PLANS, AND THE SPECIAL PROVISIONS INCLUDED IN THE CONTRACT DOCUMENTS.

STANDARDS

ANY REFERENCE TO "STANDARDS" THROUGHOUT THE PLANS OR SPECIAL PROVISIONS SHALL BE INTERPRETED TO BE THE LATEST STANDARD OF IDOT AS LISTED ON THIS SHEET.

COORDINATION

THE CONTRACTOR SHALL NOTIFY THE CITY OF BLUE ISLAND (708-597-8604) AND THE FOREST PRESERVE DISTRICT OF COOK COUNTY (708-771-1355) AT LEAST 48 HOURS IN ADVANCE OF BEGINNING WORK, AND SHALL COORDINATE ALL CONSTRUCTION OPERATIONS WITH THE ENGINEER. THE CONTRACTOR SHALL ALSO OBTAIN ANY AND ALL NECESSARY PERMITS REQUIRED BEFORE THE START OF ANY CONSTRUCTION.

PUBLIC OR PRIVATE UTILITIES

THE LOCATIONS OF PUBLIC OR PRIVATE UTILITIES SHOWN ON THE PLANS ARE APPROXIMATE, AND THE DEPARTMENT AND DISTRICT DO NOT GUARANTEE THEIR ACCURACY. THE CONTRACTOR SHALL BE REQUIRED TO ASCERTAIN THE EXACT LOCATIONS OF SUCH UTILITIES AND EXERCISE CARE DURING CONSTRUCTION OPERATIONS SO AS NOT TO DAMAGE THEM, IN ACCORDANCE WITH THE SPECIAL PROVISIONS AND ARTICLE 107.20 OF THE "STANDARD SPECIFICATIONS". THE CONTRACTOR SHALL BE RESPONSIBLE FOR CONTACTING THE UTILITY OWNERS SO THAT THEIR FACILITIES MAY BE ADJUSTED OR RELOCATED, IF NECESSARY, PRIOR TO THE START OF CONSTRUCTION OPERATIONS UNLESS OTHERWISE NOTED IN THE PLANS. ALL RELOCATION WORK ON EXISTING PRIVATE UTILITIES WILL BE DONE BY THE OWNER OF THAT UTILITY. THE CONTRACTOR SHALL BE RESPONSIBLE FOR ANY DAMAGE OR DESTRUCTION OF PUBLIC OR PRIVATE PROPERTY, AND SHALL RESTORE SUCH PROPERTY AT HIS/HER OWN EXPENSE.

SURVEY AND MONUMENTS

ALL ELEVATIONS IN THE PLANS ARE BASED UPON THE NORTH AMERICAN VERTICAL DATUM OF 1988 (NAVD88)

ALL BEARINGS AND COORDINATES REFERENCED IN THE PLAN DRAWINGS AND ALL CONTROL COORDINATES ARE BASED ON THE ILLINOIS STATE PLANE COORDINATE SYSTEM, EAST ZONE, NAD 83 (2007). ALL ELEVATIONS ARE BASED ON NATIONAL GEODETIC VERTICAL DATUM OF 1929 (NGVD 29).

THE CONTRACTOR SHALL PROTECT AND CAREFULLY PRESERVE ALL SECTION OR SUBSECTION MONUMENTS OR PROPERTY OR REFERENCE MARKERS UNTIL THE OWNER, HIS AGENT OR AN AUTHORIZED SURVEYOR HAS WITNESSED OR OTHERWISE REFERENCED THEIR LOCATIONS. WHERE SECTION OR SUBSECTION MONUMENTS ARE ENCOUNTERED, THE ENGINEER SHALL BE NOTIFIED BEFORE MONUMENTS ARE REMOVED.

DISPOSAL OF MATERIALS

THE CONTRACTOR SHALL BE REQUIRED TO DISPOSE OF ALL SIDEWALK, CURB AND GUTTER, PAVEMENT, AND ALL OTHER MATERIALS EXCAVATED OR REMOVED DUE TO CONSTRUCTION OPERATIONS, AT HIS EXPENSE. NO PAYMENT WILL BE MADE FOR HAULING OR TRUCKING MATERIAL TO LOCATIONS, PROVIDED BY THE CONTRACTOR, OUTSIDE THE LIMITS OF THE IMPROVEMENT.

UNSUITABLE MATERIAL

BEFORE REMOVAL OF ANY UNSUITABLE MATERIAL, THE CONTRACTOR SHALL TREAT THE SUBGRADE AS PER ARTICLE 301.03 OF THE "STANDARD SPECIFICATIONS" TO THE SATISFACTION OF THE ENGINEER. UNSUITABLE MATERIAL SHALL NOT BE USED AS EMBANKMENT OR FILL UNDER THE PROPOSED TRAIL AS SHOWN ON THE TYPICAL CROSS SECTIONS.

STOCKPILES

STOCKPILES OF TOPSOIL AND OTHER MATERIALS SHALL NOT BE LOCATED WITHIN A SPECIAL MANAGEMENT AREA. APPROVAL OF THE LOCATION MUST BE OBTAINED FROM THE ENGINEER PRIOR TO PLACEMENT. IF A STOCKPILE IS TO REMAIN IN PLACE FOR MORE THAN THREE DAYS, EROSION CONTROL MEASURES SHALL BE PROVIDED. STOCKPILES TO REMAIN IN PLACE FOR 30 DAYS OR MORE SHALL RECEIVE TEMPORARY SEEDING.

TREE TRIMMING

ALL BRANCHES THAT ARE LESS THAN 12 FEET ABOVE THE SURFACE OF THE TRAIL SHALL BE REMOVED BY THE CONTRACTOR. THE CONTRACTOR SHALL PERFORM THE WORK IN ACCORDANCE WITH ANSI STANDARD A300-2001 (PART 1) FOR TREE, SHRUB AND OTHER WOODY PLANT MAINTENANCE AND ANSI Z133.1-1994 FOR TREE CARE OPERATIONS PRUNING, TRIMMING, REPAIRING, MAINTAINING AND REMOVING TREES AND CUTTING BRUSH. THIS WORK SHALL NOT BE PAID FOR SEPARATELY, BUT SHALL BE INCLUDED IN THE COST OF TREE REMOVAL.

ACCESS TO PROPERTY

THE CONTRACTOR SHALL MAINTAIN ACCESS TO ABUTTING PROPERTY DURING THE CONSTRUCTION OF THIS PROJECT, EXCEPT FOR PERIODS OF SHORT DURATION AS APPROVED BY THE ENGINEER. SHOULD CLOSURE OF ACCESS BE REQUIRED, THE CONTRACTOR SHALL NOTIFY THE PROPERTY OWNER 24 HOURS IN ADVANCE OF THE SHORT DURATION CLOSURE.

SAW CUTTING

THE LIMITS OF REMOVAL OF ALL CONCRETE OR BITUMINOUS PAVEMENTS, CURBING OR SIDEWALKS SHALL BE SAWCUT IN ACCORDANCE WITH SECTION 440 OF THE "STANDARD SPECIFICATIONS" AND AT THE DIRECTION OF THE ENGINEER. THE SAW CUTTING OF BITUMINOUS PAVEMENT, DRIVEWAYS, CURBING OR SIDEWALK SHALL BE CONSIDERED INCLUDED IN THE COST OF PAVEMENT REMOVAL, CURB AND GUTTER REMOVAL, SIDEWALK REMOVAL, AND SLOPEWALL REMOVAL.

RESTORATION ACCESS

GRASS AREAS DISTURBED DURING CONSTRUCTION SHALL BE RESTORED WITH SIX INCHES OF TOPSOIL AND SEED OR SOD.

TEMPORARY DRAINAGE FOR ACCESS

THE CONTRACTOR SHALL BE AWARE OF POTENTIAL LIMITED ACCESS TO PORTIONS OF THE PROJECT. TEMPORARY DRAINAGE CROSSINGS APPROVED BY THE ENGINEER MAY BE INSTALLED BY THE CONTRACTOR AT HIS/HER EXPENSE TO GAIN ACCESS.

SEDIMENTATION AND EROSION CONTROL NOTES

A. SOIL DISTURBANCE SHALL BE CONDUCTED IN SUCH A MANNER AS TO MINIMIZE EROSION. SOIL STABILIZATION MEASURES SHALL CONSIDER THE TIME OF YEAR, SITE CONDITIONS AND THE USE OF TEMPORARY OR PERMANENT MEASURES.
B. SOIL EROSION AND SEDIMENT CONTROL FEATURES SHALL BE CONSTRUCTED PRIOR TO THE COMMENCEMENT OF UPLAND DISTURBANCE.
C. TEMPORARY SOIL STABILIZATION SHALL BE APPLIED TO DISTURBED AREAS WITHIN 14 CALENDAR DAYS OF THE END OF ACTIVE HYDROLOGIC DISTURBANCE. PERMANENT STABILIZATION SHALL BE DONE WITHIN 14 DAYS AFTER COMPLETION OF FINAL GRADING.
D. ALL STORM SEWER FACILITIES THAT ARE OR WILL BE FUNCTIONING DURING CONSTRUCTION SHALL BE PROTECTED, FILTERED, OR OTHERWISE TREATED TO REMOVE SEDIMENT.
E. ALL TEMPORARY EROSION AND SEDIMENT CONTROL MEASURES SHALL BE REMOVED WITHIN 30 DAYS AFTER FINAL SITE STABILIZATION IS ACHIEVED OR AFTER THE TEMPORARY MEASURES ARE NO LONGER NEEDED. TRAPPED SEDIMENT AND OTHER DISTURBED SOIL AREAS SHALL BE PERMANENTLY STABILIZED.
F. ALL TEMPORARY AND PERMANENT EROSION CONTROL MEASURES SHALL BE MAINTAINED AND REPAIRED AS NEEDED. THE CONTRACTOR SHALL BE RESPONSIBLE FOR INSPECTION AND REPAIR DURING CONSTRUCTION.
G. THE EROSION CONTROL MEASURES INDICATED ON THE PLANS ARE THE MINIMUM REQUIREMENTS. ADDITIONAL MEASURES MAY BE REQUIRED, AS DIRECTED BY THE ENGINEER OR GOVERNING AGENCY.
H. THE CONTRACTOR SHALL INSTALL ALL EROSION CONTROL PRIOR TO THE START OF ANY EARTHWORK.
I. IF A STOCKPILE IS TO REMAIN IN PLACE FOR MORE THAN THREE DAYS, EROSION CONTROL MEASURES SHALL BE PROVIDED BY THE CONTRACTOR.
J. EROSION CONTROL MEASURES SHALL COMPLY WITH THE MINIMUM REQUIREMENTS OF THE COOK COUNTY STORMWATER AND FLOODLAIN ORDINANCE SPECIFICATIONS AT ALL TIMES.
K. THE DEPARTMENT HAS NOT OBTAINED ANY PERMITS FOR OFFSITE BORROW, WASTE, USE (BWU) AREAS. PRIOR TO WORKING IN BWU AREAS, IF THE CONTRACTOR CHOOSES TO USE ACTIVITIES REQUIRING PERMITS IT IS THE CONTRACTOR'S RESPONSIBILITY TO SECURE THE PROPER PERMITS. IN ADDITION TO THE BORROW REVIEW (BDE 2289) and USE/WASTE REVIEW (BDE 2290) SUBMITTALS, THE CONTRACTOR SHALL SUBMIT AN EROSION AND SEDIMENT CONTROL (ESC) PLAN FOR EVERY BWU SITE TO THE DEPARTMENT FOR ACCEPTANCE. GUIDELINES FOR ACCEPTABLE BWU PRACTICES CAN BE FOUND IN SECTIONS II.G.1 AND 2 OF THE SWPPP. THE COST OF ALL MATERIALS AND LABOR NECESSARY TO COMPLY WITH THE ABOVE PROVISIONS TO PREPARE AND IMPLEMENT ESC PLANS WILL NOT BE PAID FOR SEPARATELY, BUT SHALL BE CONSIDERED AS INCLUDED IN THE UNIT BID PRICES OF THE CONTRACT AND NO ADDITIONAL COMPENSATION WILL BE ALLOWED.

TREE PRESERVATION NOTES

THE CONTRACTOR'S ATTENTION IS CALLED TO THE FACT THAT THE PRESERVATION OF EXISTING TREES IS OF UTMOST IMPORTANCE TO THE FOREST PRESERVE DISTRICT OF COOK COUNTY. IT WILL BE THE RESPONSIBILITY OF THE CONTRACTOR TO ARRANGE TREE PROTECTION WITH THE ROADSIDE DEVELOPMENT UNIT (847.705.4171) PRIOR TO SCHEDULING TREE REMOVAL. ALL TREE PROTECTION, TREE REMOVAL, PRUNING AND ROOT PRUNING SHALL BE COMPLETED BEFORE CONSTRUCTION OPERATIONS COMMENCE IN ANY AREA. AT NO TIME SHALL THE CONTRACTOR PRUNE OR REMOVE ANY TREES UNLESS SPECIFICALLY DIRECTED BY THE ROADSIDE DEVELOPMENT UNIT.

THE CONTRACTOR SHALL ERECT A TEMPORARY FENCE AROUND ALL TREES WITHIN THE CONSTRUCTION AREA TO ESTABLISH A "TREE PROTECTION ZONE" AND AROUND EXISTING WETLANDS TO ESTABLISH A "WETLAND PROTECTION ZONE" BEFORE ANY WORK BEGINS OR ANY MATERIAL IS DELIVERED TO THE JOBSITE. NO WORK IS TO BE PERFORMED (OTHER THAN ROOT PRUNING), MATERIALS STORED OR VEHICLES DRIVEN OR PARKED WITHIN THE "TREE PROTECTION ZONE" AND "WETLAND PROTECTION ZONE". REMOVE PROTECTIVE TEMPORARY FENCE ONLY AFTER ALL CONSTRUCTION WORK HAS BEEN COMPLETED.

THE CONTRACTOR SHALL TAKE EXTRA CARE IN GRADING AND EXCAVATING NEAR TREES WHICH ARE NOT MARKED FOR REMOVAL SO AS NOT TO CAUSE INJURY TO THE ROOT SYSTEM OR TRUNKS. MAJOR ROOTS OF A TREE THAT ARE TO REMAIN IN PLACE EXTENDING INTO THE EXCAVATION AREAS AT AN ELEVATION THAT WOULD INTERFERE WITH ANY PORTION OF THE PLANNED CONSTRUCTION SHALL BE SEVERED AT A POINT IMMEDIATELY OUTSIDE OF THE EXCAVATION AREA IN A MANNER THAT WILL CAUSE THE LEAST AMOUNT OF SYSTEMIC DAMAGE TO THE REMAINING TREE STRUCTURE.

TREE ROOT PRUNING IS TO BE USED ON EXISTING TREES WHEN NECESSARY TO CUT MAJOR TREE ROOTS TO PREVENT THE RIPPING UP OF ROOTS WHEN TRENCHING OR EXCAVATION IS WITHIN THE ROOT ZONE OF ADJACENT TREES TO REMAIN. SUPPLEMENTAL WATERING IS SPECIFIED FOR TREES AND SHRUBS THAT WILL BE DISTURBED BY CONSTRUCTION BUT WILL REMAIN. SUPPLEMENTAL WATERING OF TREES SHOULD BEGIN IMMEDIATELY AFTER ROOT PRUNING OF THE TREES HAS OCCURRED.

LANDSCAPING NOTES

EXISTING VEGETATED AREAS (TREES, SHRUBS, VEGETATIVE BUFFERS, TURF AREAS, ETC.) WHERE DISTURBANCE IS NOT OCCURRING (INCLUDING AREAS OUTSIDE THE PROJECT LIMITS) SHALL NOT BE DISTURBED TO ENSURE THAT EXISTING VEGETATION IS PRESERVED TO MINIMIZE SOIL EROSION AND TO ELIMINATE SOIL COMPACTION. NO MATERIAL ARE TO BE STORED OR VEHICLES DRIVEN OR PARKED WITHIN THESE UNDISTURBED AREAS AT ANY TIME.

PRUNE TREE LIMBS THAT MIGHT BE DAMAGED BY EQUIPMENT OPERATIONS AT LEAST ONE WEEK PRIOR TO THE START OF CONSTRUCTION BY A CERTIFIED ARBORIST. ANY TREE LIMBS THAT ARE BROKEN BY CONSTRUCTION EQUIPMENT AFTER THE INITIAL PRUNING MUST BE PRUNED CORRECTLY WITHIN 72 HOURS.

SUPPLEMENTAL WATERING IS SPECIFIED FOR TREES AND SHRUBS THAT WILL BE DISTURBED BY CONSTRUCTION BUT WILL REMAIN. NOTE THAT WATERING SHOULD BEGIN IMMEDIATELY AFTER ROOT PRUNING, TOP PRUNING OR OTHER CONSTRUCTION DISTURBANCE.

ALL PLANT MATERIAL SHALL BE MARKED IN THE FIELD, CONTACT THE ROADSIDE DEVELOPMENT UNIT AT (847.705.4171) A MINIMUM OF 72 HOURS PRIOR TO TREE PLANTING WORK.

	CODE NO.	ITEM	UNIT	CITY OF BLUE ISLAND 0028	FPDCC 0028	TOTAL QUANTITY 0028
	20100110	TREE REMOVAL (6 TO 15 UNITS DIAMETER)	UNIT	250	1202	1,452
	20100210	TREE REMOVAL (OVER 15 UNITS DIAMETER)	UNIT	168	1170	1,338
	20100500	TREE REMOVAL, ACRES	ACRE	0	1.5	1.5
	20101000	TEMPORARY FENCE	FOOT	480	6000	6,480
*	20101200	TREE ROOT PRUNING	EACH	8	75	83
*	20101300	TREE PRUNING (1 TO 10 INCH DIAMETER)	EACH	2	17	19
*	20101350	TREE PRUNING (OVER 10 INCH DIAMETER)	EACH	6	59	65
	20200100	EARTH EXCAVATION	CU YD	416	1438	1,854
	20201200	REMOVAL AND DISPOSAL OF UNSUITABLE MATERIAL	CU YD	1842	7279	9,121
	20400800	FURNISHED EXCAVATION	CU YD	1981	2318	4,299
	20800150	TRENCH BACKFILL	CU YD	8	7	15
	20900110	POROUS GRANULAR BACKFILL	CU YD	27	27	54
	21001000	GEOTECHNICAL FABRIC FOR GROUND STABILIZATION	SQ YD	3444	7146	10,590
	21101625	TOPSOIL FURNISH AND PLACE, 6"	SQ YD	6018	9312	15,330
*	25000115	SEEDING, CLASS 1B	ACRE	0.21	0.39	0.60
*	25000400	NITROGEN FERTILIZER NUTRIENT	POUND	112	173	285
*	25000600	POTASSIUM FERTILIZER NUTRIENT	POUND	112	173	285
*	25100115	MULCH, METHOD 2	ACRE	1.25	2.00	3.25
*	25100630	EROSION CONTROL BLANKET	SQ YD	6018	9312	15,330
*	25200200	SUPPLEMENTAL WATERING	UNIT	60	93	153

CODE NO.	ITEM	UNIT	CITY OF BLUE ISLAND 0028	FPDCC 0028	TOTAL QUANTITY 0028
28000250	TEMPORARY EROSION CONTROL SEEDING	POUND	124	192	316
28000305	TEMPORARY DITCH CHECKS	FOOT	16	40	56
28000315	AGGREGATE DITCH CHECKS	TON	2	5	7
28000400	PERIMETER EROSION BARRIER	FOOT	3653	5527	9,180
28100103	STONE RIP RAP, CLASS A2	SQ YD	23	25	48
28100107	STONE RIP RAP, CLASS A4	SQ YD	509.5	509.5	1,019
28200200	FILTER FABRIC	SQ YD	532.5	645.5	1,178
30300001	AGGREGATE SUBGRADE IMPROVEMENT	CU YD	276	1092	1,368
35101600	AGGREGATE BASE COURSE, TYPE B 4"	SQ YD	0	21	21
35102000	AGGREGATE BASE COURSE, TYPE B 8"	SQ YD	2519	5365	7,884
40600275	BITUMINOUS MATERIALS (PRIME COAT)	POUND	5668	12072	17,740
40600290	BITUMINOUS MATERIALS (TACK COAT)	POUND	0	298	298
40603080	HOT-MIX ASPHALT BINDER COURSE, IL-19.0, N50	TON	0	84	84
40603335	HOT-MIX ASPHALT SURFACE COURSE, MIX "D", N50	TON	282	582	864
42001300	PROTECTIVE COAT	SQ YD	0	118	118
42400300	PORTLAND CEMENT CONCRETE SIDEWALK 6 INCH	SQ FT	0	191	191
42400800	DETECTABLE WARNINGS	SQ FT	0	20	20
44000100	PAVEMENT REMOVAL	SQ YD	0	523	523
44000500	COMBINATION CURB AND GUTTER REMOVAL	FOOT	0	20	20
50104650	SLOPE WALL REMOVAL	SQ YD	275	0	275

* SPECIALTY ITEMS

FILE NAME = P:\Blue Island_25367145_Cal-Sag Trail\Phase 2\Roadway\BlueIslandEast\General\SQ0_Cal-Sag_BlueIE.dgn

AECOM
303 East Wacker Drive, Suite 1400, Chicago, IL 60601
T 1-312-373-7700 F 1-312-373-6600

USER NAME = ken_moy	DESIGNED - KLM	REVISED -
	DRAWN - KLM	REVISED -
PLOT SCALE = 20.0000 ' / in.	CHECKED - BMC	REVISED -
PLOT DATE = 8/24/2016 1:31:12 PM	DATE - AUGUST 5, 2016	REVISED -

STATE OF ILLINOIS
DEPARTMENT OF TRANSPORTATION

CAL-SAG GREENWAY TRAIL (BLUE ISLAND EAST SEGMENT)
SUMMARY OF QUANTITIES

SHEET NO. 1 OF 3 SHEETS | STA. TO STA.

SECTION	COUNTY	TOTAL SHEETS	SHEET NO.
08-00178-02-BT	COOK	64	3
	CONTRACT NO. 61C12		

FED. ROAD DIST. NO. 1 | ILLINOIS | FED. AID PROJECT

CODE NO.	ITEM	UNIT	CITY OF BLUE ISLAND 0028	FPDCC 0028	TOTAL QUANTITY 0028
50200100	STRUCTURE EXCAVATION	CU YD	43	43	86
50300225	CONCRETE STRUCTURES	CU YD	48.2	48.2	96.4
50300255	CONCRETE SUPERSTRUCTURE	CU YD	6.4	6.4	12.8
50300300	PROTECTIVE COAT	SQ YD	237.5	237.5	475
50800105	REINFORCEMENT BARS	POUND	1190	1190	2,380
50800205	REINFORCEMENT BARS, EPOXY COATED	POUND	13075	13075	26,150
* 50901760	PIPE HANDRAIL	FOOT	69	0	69
51100100	SLOPE WALL 4 INCH	SQ YD	282	0	282
51603000	DRILLED SHAFT IN SOIL	CU YD	25.2	25.2	50.4
51604000	DRILLED SHAFT IN ROCK	CU YD	4.7	4.7	9.4
52000110	PREFORMED JOINT STRIP SEAL	FOOT	25	25	50
542A0217	PIPE CULVERTS, CLASS A, TYPE 1 12"	FOOT	61	18	79
542A0220	PIPE CULVERTS, CLASS A, TYPE 1 15"	FOOT	0	17	17
542A0226	PIPE CULVERTS, CLASS A, TYPE 1 21"	FOOT	0	20	20
54213657	PRECAST REINFORCED CONCRETE FLARED END SECTIONS 12"	EACH	6	2	8
54213660	PRECAST REINFORCED CONCRETE FLARED END SECTIONS 15"	EACH	0	2	2
54213666	PRECAST REINFORCED CONCRETE FLARED END SECTIONS 21"	EACH	0	2	2
58700300	CONCRETE SEALER	SQ FT	585	585	1,170
59100100	GEOCOMPOSITE WALL DRAIN	SQ YD	18	18	36
60603800	COMBINATION CONCRETE CURB AND GUTTER, TYPE B-6.12	FOOT	0	394	394

CODE NO.	ITEM	UNIT	CITY OF BLUE ISLAND 0028	FPDCC 0028	TOTAL QUANTITY 0028
* 66400305	CHAIN LINK FENCE, 6'	FOOT	0	1649	1,649
* 66400505	CHAIN LINK FENCE, 8'	FOOT	0	920	920
67000500	ENGINEER'S FIELD OFFICE, TYPE B	CAL MO	9	9	18
67100100	MOBILIZATION	LSUM	0.5	0.5	1
* 66900200	NON-SPECIAL WASTE DISPOSAL	CU YD	75	225	300
* 66900450	SPECIAL WASTE PLANS AND REPORTS	LSUM	0.25	0.75	1
* 66900530	SOIL DISPOSAL ANALYSIS	EACH	1	1	2
70102625	TRAFFIC CONTROL AND PROTECTION, STANDARD 701606	LSUM	0	1	1
70102635	TRAFFIC CONTROL AND PROTECTION, STANDARD 701701	LSUM	0	1	1
70103815	TRAFFIC CONTROL SURVEILLANCE	CAL DA	0	15	15
72000100	SIGN PANEL - TYPE 1	SQ FT	0	20	20
72400500	RELOCATE SIGN PANEL ASSEMBLY - TYPE A	EACH	0	1	1
72900100	METAL POST - TYPE A	FOOT	0	20	20
72900200	METAL POST - TYPE B	FOOT	0	64	64
* 78000200	THERMOPLASTIC PAVEMENT MARKING - LINE 4"	FOOT	0	629	629
* 78000400	THERMOPLASTIC PAVEMENT MARKING - LINE 6"	FOOT	0	83	83
* 78000500	THERMOPLASTIC PAVEMENT MARKING - LINE 8"	FOOT	0	170	170
* 78000600	THERMOPLASTIC PAVEMENT MARKING - LINE 12"	FOOT	0	135	135
* 78001110	PAINT PAVEMENT MARKING - LINE 4"	FOOT	2506	4411	6,917
* 78001150	PAINT PAVEMENT MARKING - LINE 12"	FOOT	0	10	10

* SPECIALTY ITEMS

FILE NAME = P:\Blue Island_25367145_Cal-Sag Trail\Phase 2\Roadway\Blue Island East\General\S00_Cal-Sag_BlueIE.dgn

AECOM
303 East Wacker Drive, Suite 1400, Chicago, IL 60601
T 1-312-373-7700 F 1-312-373-6800

USER NAME = ken_moy	DESIGNED - KLM	REVISED -
	DRAWN - KLM	REVISED -
PLOT SCALE = 20.0000 ' / in.	CHECKED - BMC	REVISED -
PLOT DATE = 8/24/2016 1:31:21 PM	DATE - AUGUST 5, 2016	REVISED -

STATE OF ILLINOIS
DEPARTMENT OF TRANSPORTATION

CAL-SAG GREENWAY TRAIL (BLUE ISLAND EAST SEGMENT)
SUMMARY OF QUANTITIES

SHEET NO. 2 OF 3 SHEETS | STA. TO STA.

SECTION	COUNTY	TOTAL SHEETS	SHEET NO.
08-00178-02-BT	COOK	64	4
	CONTRACT NO. 61C12		

FED. ROAD DIST. NO. 1 | ILLINOIS | FED. AID PROJECT

	CODE NO.	ITEM	UNIT	CITY OF BLUE ISLAND 0028	FPDCC 0028	TOTAL QUANTITY 0028
*	80400100	ELECTRIC SERVICE INSTALLATION	EACH	0.5	0.5	1
*	80400200	ELECTRIC UTILITY SERVICE CONNECTION	LSUM	0.5	0.5	1
*	81028720	UNDERGROUND CONDUIT, COILABLE NONMETALLIC CONDUIT, 1" DIA.	FOOT	60	60	120
*	81028200	UNDERGROUND CONDUIT, GALVANIZED STEEL, 2" DIA.	FOOT	250	250	500
*	81100320	CONDUIT ATTACHED TO STRUCTURE, 1" DIA., PVC COATED GALVANIZED STEEL	FOOT	260	260	520
*	81300220	JUNCTION BOX, STAINLESS STEEL, ATTACHED TO STRUCTURE, 6" X 6" X 4"	EACH	3	3	6
*	81300320	JUNCTION BOX, STAINLESS STEEL, ATTACHED TO STRUCTURE, 8" X 8" X 6"	EACH	1	1	2
*	81702110	ELECTRIC CABLE IN CONDUIT, 600V (XLP-TYPE USE) 1/C NO. 10	FOOT	363	363	726
*	81702120	ELECTRIC CABLE IN CONDUIT, 600V (XLP-TYPE USE) 1/C NO. 8	FOOT	1452	1452	2,904
*	81702400	ELECTRIC CABLE IN CONDUIT, 600V (XLP-TYPE USE) 3-1/C NO. 2	FOOT	250	250	500
*	82200605	WATERWAY OBSTRUCTION WARNING LUMINAIRE, LED	EACH	3	3	6
*	82500330	LIGHTING CONTROLLER, PEDESTAL MOUNTED, 240VOLT, 60AMP	EACH	0.5	0.5	1
*	89502376	REBUILD EXISTING HANDHOLE	EACH	0	1	1
*	A2002916	TREE, CELTIS OCCIDENTALIS (COMMON HACKBERRY), 2" CALIPER, BALLED AND BURLAPPED	EACH	10	25	35
*	A2006514	TREE, QUERCUS BICOLOR (SWAMP WHITE OAK), 1-3/4" CALIPER, BALLED AND BURLAPPED	EACH	11	24	35
*	B2001616	TREE, CRATAEGUS CRUSGALLI INERMIS (THORN LESS COCKSPUR HAWTHORN), 2" CALIPER, TREE FORM, BALLED AND BURLAPPED	EACH	9	27	36
*	K0026610	TRANSPLANTED SALVAGED TREES	EACH	4	0	4
	X0321322	DROP GATE	EACH	0	1	1
	X0322508	PEDESTRIAN TRUSS SUPERSTRUCTURE	SQ FT	1860	1860	3,720
*	X0325522	REINSTALLING EXISTING STEEL GATE ASSEMBLY	EACH	0	1	1

	CODE NO.	ITEM	UNIT	CITY OF BLUE ISLAND 0028	FPDCC 0028	TOTAL QUANTITY 0028
*	X2502014	SEEDING, CLASS 4A (MODIFIED)	ACRE	1.00	1.50	2.50
	XX005642	GATEWAY MONUMENT SIGN COMPLETE	EACH	1	1	2
	XX007399	MONUMENT TYPE A FOUNDATION	EACH	1	2	3
	XX006957	CONCRETE STAIRS AND SIDEWALK REMOVAL	L Sum	0	1	1
	XX008600	DECORATIVE SIGN AND POST (DIRECT POST)	EACH	1	2	3
	Z0013798	CONSTRUCTION LAYOUT	LSUM	0.5	0.5	1
	Z0022800	FENCE REMOVAL	FOOT	0	1907	1,907
	Z0004562	COMBINATION CONCRETE CURB AND GUTTER REMOVAL AND REPLACEMENT	FOOT	0	23	23
	Z0042300	PORTLAND CEMENT CONCRETE SIDEWALK CURB	FOOT	0	35	35
	Z0046304	PIPE UNDERDRAINS FOR STRUCTURES 4"	FOOT	44	44	88
*	Z0055800	RUSTIC RAIL FENCE	FOOT	160	80	240
Δ	Z0076600	TRAINEES	HOUR	250	250	500
Δ	Z0076604	TRAINEES TRAINING PROGRAM GRADUATE	HOUR	250	250	500

* SPECIALTY ITEMS
Δ 0042

FILE NAME = P:\Blue Island.25367145.Cal-SagTrail\Phase 2\Roadway\BlueIslandEast\General\500.Cal-Sag.BlueIE.dgn

AECOM
303 East Wacker Drive, Suite 1400, Chicago, IL 60601
T 1-312-373-7700 F 1-312-373-6800

USER NAME = ken_moy	DESIGNED - KLM	REVISED -	
	DRAWN - KLM	REVISED -	
PLOT SCALE = 20.0000 ' / in.	CHECKED - BMC	REVISED -	
PLOT DATE = 8/24/2016 1:31:30 PM	DATE - AUGUST 5, 2016	REVISED -	

STATE OF ILLINOIS
DEPARTMENT OF TRANSPORTATION

CAL-SAG GREENWAY TRAIL (BLUE ISLAND EAST SEGMENT)
SUMMARY OF QUANTITIES

SHEET NO. 3 OF 3 SHEETS STA. TO STA.

SECTION	COUNTY	TOTAL SHEETS	SHEET NO.
08-00178-02-BT	COOK	64	5
	CONTRACT NO. 61C12		

FED. ROAD DIST. NO. 1 | ILLINOIS | FED. AID PROJECT

SIGN INSTALLATION SCHEDULE

STATION	RT/LT	SIGN	DESIGNATION	SIGN PANEL DIMENSIONS (IN)		TYPE A POST (EACH)	TYPE B POST (EACH)	LENGTH /POST (FT)	TOTAL LENGTH (FT)
480+20.00	LT	COMBINATION BIKE AND PED CROSSING	W11-15	36	36	-	2	15	30
		DIAGONAL ARROW	W16-7P	24	12				
480+24.00	RT	STOP	R1-1	18	18	1	-	10	10
480+75.00	RT	STOP	R1-1	30	30	-	2	16	32
		COMBINATION BIKE AND PED CROSSING	W11-15	30	30				
480+80.00	LT	STOP	R1-1	18	18	1	-	10	10

EARTHWORK SCHEDULE

	STATION	TO	STATION	EARTH EXCAVATION CU YD	EARTH EXCAVATION ADJUSTED FOR SHRINKAGE (25%) CU YD	EMBANKMENT CU YD	EARTHWORK BALANCE WASTE (+) OR SHORTAGE (-) FURNISHED EXCAVATION CU YD	UNSUITABLE EXCAVATION (REMOVAL & DISPOSAL OF UNSUITABLE MATERIAL) CU YD	UNSUITABLE MATERIAL ADJUSTED FOR SHRINKAGE (25%) CU YD	TOPSOIL FURNISH AND PLACE, 6" CU YD	EARTHWORK BALANCE WASTE (+) OR SHORTAGE (-) (UNSUITABLE MATERIAL) CU YD
1	422+45.00		445+95.45	416	312	2,293	-1,981	1,842	1,382	1,003	379
2	449+05.45		480+26.50	1,372	1,029	3,118	-2,089	6,630	4,972	1,363	3,609
3	480+70.55		495+97.73	66	50	278	-229	649	487	189	298
			TOTAL:	**1,854**	**1,391**	**5,689**	**-4,299**	**9,121**	**6,841**	**2,555**	**4,286**

CHAIN LINK FENCE SCHEDULE

	STATION	OFFSET (FT)	RT/LT	HEIGHT (FT)	FABRIC	NOTES
FENCE 1 LOCATION	448+94.39	38.49	RT	6	TYPE I, CLASS D	CONNECT TO EXISTING FENCE
	449+75.00	24.6	RT	6	TYPE I, CLASS D	KINK IN FENCE
	450+00.00	23.21	RT	6	TYPE I, CLASS D	KINK IN FENCE
	451+19.96	22.68	RT	6	TYPE I, CLASS D	KINK IN FENCE
	451+60.60	8.00	RT	6	TYPE I, CLASS D	KINK IN FENCE
	453+01.23	20.43	RT	6	TYPE I, CLASS D	KINK IN FENCE
	454+11.25	24.00	RT	6	TYPE I, CLASS D	KINK IN FENCE
	456+25.06	24.00	RT	6	TYPE I, CLASS D	CONNECT TO EXISTING FENCE

CHAIN LINK FENCE SCHEDULE

	STATION	OFFSET (FT)	RT/LT	HEIGHT (FT)	FABRIC	NOTES
FENCE 2 LOCATION	471+76.86	75.42	RT	6	TYPE IV, CLASS (PVC)	CONNECT TO EXISTING FENCE
	471+81.42	7.52	RT	6	TYPE IV, CLASS (PVC)	KINK IN FENCE
	472+59.38	8.00	RT	6	TYPE IV, CLASS (PVC)	KINK IN FENCE
	475+03.63	8.89	RT	6	TYPE IV, CLASS (PVC)	KINK IN FENCE
	475+76.77	8.00	RT	6	TYPE IV, CLASS (PVC)	KINK IN FENCE
	478+93.96	8.00	RT	6	TYPE IV, CLASS (PVC)	KINK IN FENCE
	479+69.86	8.00	RT	6	TYPE IV, CLASS (PVC)	KINK IN FENCE
	480+13.03	17.41	RT	6	TYPE IV, CLASS (PVC)	CONNECT TO ROLLING FENCE GATE ASSEMBLY
	480+13.03	17.41	RT	EXIST.	EXIST.	REINSTALL ROLLING FENCE GATE ASSEMBLY
	480+25.11	17.06	RT	EXIST.	EXIST.	REINSTALL ROLLING FENCE GATE ASSEMBLY

CHAIN LINK FENCE - REMOVE AND REPLACE

	STATION	OFFSET (FT)	RT/LT	HEIGHT (FT)	FABRIC	NOTES
FENCE 3 LOCATION	480+80.00	EXIST.	RT	8	TYPE IV, CLASS (PVC)	CONNECT TO ROLLING FENCE GATE ASSEMBLY
	490+00.00	EXIST.	RT	8	TYPE IV, CLASS (PVC)	CONNECT TO EXISTING FENCE

TREE PLANTING SCHEDULE

CITY OF BLUE ISLAND

SPECIES	STATION	OFFSET (FT) LT	OFFSET (FT) RT	EACH
T-CELTIS OCCID 2	422+50.00		15	1
T-QUERCUS BICOL 1-3/4	422+60.00	10		1
T-CELTIS OCCID 2	422+80.00		15	1
	422+90.00	10		1
T-CELTIS OCCID 2	423+10.00		15	1
T-QUERCUS BICOL 1-3/4	423+20.00	15		1
T-CRAT CRU-I TF 2	423+50.00	15		1
T-CRAT CRU-I TF 2	425+00.00	15		1
T-CRAT CRU-I TF 2	425+40.00	15		1
T-CRAT CRU-I TF 2	425+80.00	15		1
T-QUERCUS BICOL 1-3/4	426+20.00	15		1
T-QUERCUS BICOL 1-3/4	426+60.00	15		1
T-QUERCUS BICOL 1-3/4	427+00.00	15		1
T-QUERCUS BICOL 1-3/4	427+40.00	15		1
T-CELTIS OCCID 2	428+40.00	15		1
T-CELTIS OCCID 2	428+80.00	15		1
T-CELTIS OCCID 2	429+20.00	15		1
T-CELTIS OCCID 2	429+60.00	15		1
T-QUERCUS BICOL 1-3/4	431+30.00	10		1
T-QUERCUS BICOL 1-3/4	431+70.00	10		1
T-CELTIS OCCID 2	439+10.00	15		1
T-CRAT CRU-I TF 2	439+50.00	15		1
T-CRAT CRU-I TF 2	439+80.00	15		1
T-CELTIS OCCID 2	442+10.00	10		1
T-CELTIS OCCID 2	442+40.00	10		1
T-QUERCUS BICOL 1-3/4	444+40.00	10		1
T-QUERCUS BICOL 1-3/4	444+80.00	13		1
T-CRAT CRU-I TF 2	445+20.00	13		1
T-CRAT CRU-I TF 2	445+60.00	13		1
T-CRAT CRU-I TF 2	445+60.00		13	1
TOTAL: T-CELTIS OCCID 2				10
TOTAL: T-QUERCUS BICOL 1-3/4				11
TOTAL: T-CRAT CRU-I TF 2				9

TREE PLANTING SCHEDULE

FOREST PRESERVE DISTRICT OF COOK COUNTY

SPECIES	STATION	OFFSET (FT) LT	OFFSET (FT) RT	EACH
T-CRAT CRU-I TF 2	449+40.00	13		1
T-CRAT CRU-I TF 2	449+40.00		13	1
T-CELTIS OCCID 2	450+20.00	15		1
T-CELTIS OCCID 2	450+50.00	15		1
T-CELTIS OCCID 2	450+80.00	15		1
T-QUERCUS BICOL 1-3/4	451+10.00	15		1
T-QUERCUS BICOL 1-3/4	451+40.00	15		1
T-QUERCUS BICOL 1-3/4	451+65.00	15		1
T-QUERCUS BICOL 1-3/4	452+40.00	15		1
T-QUERCUS BICOL 1-3/4	452+70.00	15		1
T-CELTIS OCCID 2	453+00.00	15		1
T-CELTIS OCCID 2	453+00.00		15	1
T-CELTIS OCCID 2	453+25.00	15		1
T-CRAT CRU-I TF 2	453+50.00	15		1
T-CRAT CRU-I TF 2	453+80.00	10		1
T-CRAT CRU-I TF 2	454+40.00	10		1
T-CRAT CRU-I TF 2	454+70.00	10		1
T-QUERCUS BICOL 1-3/4	455+00.00	10		1
T-QUERCUS BICOL 1-3/4	455+50.00	10		1
T-QUERCUS BICOL 1-3/4	455+80.00	10		1
T-CELTIS OCCID 2	456+10.00	10		1
T-CELTIS OCCID 2	456+60.00	10		1
T-CELTIS OCCID 2	457+30.00	10		1
T-CELTIS OCCID 2	457+60.00	10		1
T-CELTIS OCCID 2	457+90.00	10		1
T-CRAT CRU-I TF 2	458+30.00	10		1
T-CRAT CRU-I TF 2	461+30.00	10		1
T-CRAT CRU-I TF 2	461+70.00	10		1
T-CRAT CRU-I TF 2	463+00.00	10		1
T-CRAT CRU-I TF 2	463+50.00	10		1
T-CELTIS OCCID 2	464+50.00	10		1
T-CELTIS OCCID 2	465+00.00	10		1
T-QUERCUS BICOL 1-3/4	465+50.00	10		1
T-QUERCUS BICOL 1-3/4	465+90.00	10		1

TREE PLANTING SCHEDULE

FOREST PRESERVE DISTRICT OF COOK COUNTY

SPECIES	STATION	OFFSET (FT) LT	OFFSET (FT) RT	EACH
T-CRAT CRU-I TF 2	470+00.00	10		1
T-CRAT CRU-I TF 2	470+50.00		25	1
T-QUERCUS BICOL 1-3/4	470+70.00	10		1
T-QUERCUS BICOL 1-3/4	470+95.00	10		1
T-CELTIS OCCID 2	471+20.00	10		1
T-CELTIS OCCID 2	471+48.00	11		1
T-CELTIS OCCID 2	471+64.00		25	1
T-CELTIS OCCID 2	471+80.00	11		1
T-CRAT CRU-I TF 2	471+84.50		42	1
T-CRAT CRU-I TF 2	471+87.00		22	1
T-QUERCUS BICOL 1-3/4	472+00.00		64	1
T-CELTIS OCCID 2	472+12.50	11		1
T-CRAT CRU-I TF 2	472+11.42		71	1
T-CRAT CRU-I TF 2	472+14.50		10	1
T-CRAT CRU-I TF 2	472+38.00		12	1
T-CRAT CRU-I TF 2	472+64.00		13	1
T-QUERCUS BICOL 1-3/4	472+77.40		74	1
T-CRAT CRU-I TF 2	472+87.00		12	1
T-QUERCUS BICOL 1-3/4	472+97.00		70	1
T-CRAT CRU-I TF 2	473+09.00		10	1
T-CRAT CRU-I TF 2	473+16.60		66	1
T-QUERCUS BICOL 1-3/4	473+36.00		62	1
T-CELTIS OCCID 2	473+25.00	10		1
T-CELTIS OCCID 2	473+80.00	10		1
T-CRAT CRU-I TF 2	475+20.00	10		1
T-CRAT CRU-I TF 2	475+63.50		20	1
T-QUERCUS BICOL 1-3/4	477+30.00	10		1
T-QUERCUS BICOL 1-3/4	477+60.00	10		1
T-CRAT CRU-I TF 2	477+90.00	10		1
T-CRAT CRU-I TF 2	478+20.00	10		1
T-QUERCUS BICOL 1-3/4	479+00.00	10		1
T-QUERCUS BICOL 1-3/4	479+30.00	10		1
T-CELTIS OCCID 2	479+55.00	10		1
T-CELTIS OCCID 2	479+80.00	10		1
TOTAL: T-CELTIS OCCID 2				25
TOTAL: T-QUERCUS BICOL 1-3/4				24
TOTAL: T-CRAT CRU-I TF 2				27

SCHEDULE FOR GATEWAY MONUMENT SIGN COMPLETE AND DECORATIVE SIGN AND POST (DIRECT POST)

Blue Island Location	Round directional signs	Round Logo Signs	Rect. Trail Signs	Rect Info Signs	Decorative sign & post	Gateway Mon. Sign Complete	Logo 1 sided	Logo 2 sided	Restroom Sign (arrow)	Bus sign (arrow)	Train Sign (arrow)	Restaurant Sign (arrow)	Bike Shop (arrow)	Mile Marker	Sign Sup Brack	Directional Sign Callout with single arrows
425+25	2	2			1											(1) Riverdale (up), (1) Blue Island (up)
445+00						1	1									
Extras		2			1		1									
Subtotal	2	4	0	0	2	1	2	0				4		0	0	

Cook FPD Location	Round directional signs	Round Logo Signs	Rect. Trail Signs	Rect Info Signs	Decorative sign post	Gateway Mon. Sign Complete	Logo 1 sided	Logo 2 sided	Restroom Sign (arrow)	Bus sign (arrow)	Train Sign (arrow)	Restaurant Sign (arrow)	Bike Shop (arrow)	Mile Marker	Sign Sup Brack	Directional Sign Callout with single arrows
449+65						1	1									
449+60		2			1									2		MM=19
480+00	2	2			1				1 lt & 1 rt							(1) Riverdale (up), (1) Blue Island (up)
Extras		2			1											
Subtotal	2	6	0	0	3	1	1	0	2					2	0	

FILE NAME = P:\Blue Island_25367145_Cal-Sag-Trail\Phase 2\Roadway\BlueIslandEast\General\Schedules_Cal-Sag_BlueIE.dgn

AECOM
303 East Wacker Drive, Suite 1400, Chicago, IL 60601
T 1-312-373-7700 F 1-312-373-6800

USER NAME = ken_moy	DESIGNED - KLM	REVISED -	
	DRAWN - KLM	REVISED -	
PLOT SCALE = 20.0000 ' / in.	CHECKED - BMC	REVISED -	
PLOT DATE = 8/4/2016 9:40:45 AM	DATE - AUGUST 5, 2016	REVISED -	

STATE OF ILLINOIS
DEPARTMENT OF TRANSPORTATION

CAL-SAG GREENWAY TRAIL (BLUE ISLAND EAST SEGMENT)
SCHEDULES

SHEET NO. OF SHEETS STA. TO STA.

SECTION	COUNTY	TOTAL SHEETS	SHEET NO.
08-00178-02-BT	COOK	64	6
	CONTRACT NO. 61C12		

FED. ROAD DIST. NO. 1 | ILLINOIS | FED. AID PROJECT

TREE REMOVAL SCHEDULE

	STATION	OFFSET (FT) LT	OFFSET (FT) RT	6-15 UNITS	> 15 UNITS
CITY OF BLUE ISLAND	424+74.		7	12	
	424+85.	12		12	
	424+85.5	12		8	
	425+32.	14		10	
	426+20.	26		12	
	426+82.	30		13	
	426+83.	20		10	
	426+97.	14.5		9	
	427+79.	8.5		8	
	428+42.		11.6	8	
	438+31.		18	10	
	443+81.		17	15	
	445+69.		2.4	8	
	445+79.		28		16
	445+81.		33		16
	445+83.		4.5	10	
	445+86.		38.5	15	
	445+87.	2.4			21
	445+89.		34.7	13	
	445+90.	0.2			24
	445+91.		17		21
	445+94.	29		8	
	445+95.		9.6	12	
	446+25.		0.8		24
	446+37.	11.4		15	
	446+38.	7.6			18
	SUBTOTAL:			208	140
	20% CONTIGENCY:			42	28
	TOTAL CITY OF BLUE ISLAND:			250	168

TREE REMOVAL SCHEDULE

	STATION	OFFSET (FT) LT	OFFSET (FT) RT	6-15 UNITS	> 15 UNITS
FOREST PRESERVE DISTRICT OF COOK COUNTY	448+59.		23	10	
	448+69.		20	10	
	448+73.		8		21
	448+81.	7			28
	448+97.	12			16
	449+16.		10		16
	449+22.		24		18
	449+27.	36		12	
	449+34.	35			
	449+38.		12		18
	449+48.		7.6		24
	449+59.	7.3			16
	449+66.		14.6	13	
	449+77.	4.8		15	
	449+89.		15	10	
	450+01.		10	13	
	450+01.		11.6	12	
	450+03.		17.6	13	
	450+03.	3.9		11	
	450+09.		19	10	
	450+14.		6.5	12	
	450+27.		10.5	14	
	450+27.	7.7			21
	450+33.	6		12	
	450+56.	0.8		13	
	450+74.	7.5			18
	450+85.		17.6	10	
	450+95.		19	14	
	451+15.5	15.6			16
	451+16.	17.3		14	
	451+32.	14.6			18
	451+44.		9.3		40
	451+49.		9.2	13	
	451+88.	11			21
	451+91.	12.7		12	
	452+08.		11.5	11	
	452+15.	10.5			28
	452+16.	12		8	
	452+31.		5.6	10	
	452+35.	2		9	
	452+35.		2	10	
	452+59.	10.4		12	
	452+62.		13	8	
	452+87.		17	10	
	452+89.		9	12	
	452+90.		2	8	
	452+90.		13.5	12	
	453+00.	7		8	
	453+15.		18	8	
	453+25.		21	8	
	453+32.		15.4	12	
	453+35.		2.7	8	
	453+38.		2	9	
	453+39.	23		9	
	453+40.	5		9	
	453+42.		20	8	
	453+43.	12		9	
	453+56.		7.5		28
	453+67.		14		21
	453+72.		11		18
	453+73.	7.4		15	
	453+74.		14		16
	453+74.		11	8	
	453+89.		3	9	

TREE REMOVAL SCHEDULE

	STATION	OFFSET (FT) LT	OFFSET (FT) RT	6-15 UNITS	> 15 UNITS
FOREST PRESERVE DISTRICT OF COOK COUNTY	453+91.	5.6		9	
	453+93.		16	8	
	453+97.		2	8	
	454+00.		17	8	
	454+10.	6.5		9	
	454+17.		5.6	10	
	454+20.		24	14	
	454+44.	1		10	
	454+60.		0	8	
	454+70.		20	12	
	454+75.	12.5		10	
	454+89.	1		8	
	455+04.		7	10	
	455+03.		20	9	
	455+18.	0.6		8	
	455+30.	6.4		8	
	455+31.		22	8	
	455+44.5		19	8	
	455+81.		17	10	
	455+95.		18	10	
	455+97.	12		10	
	456+03.		25	12	
	456+05.		5.6	12	
	456+22.		3	11	
	456+33.		21		56
	456+40.	2			18
	456+71.		15		50
	456+74.		24		24
	457+00.		2	13	
	457+39.		6.5		16
	457+47.	7			20
	457+47.	6			18
	457+70.		18		21
	457+95.	10		10	
	458+19.		15	9	
	458+32.		8		16
	458+45.		1		18
	458+97.		5.5	10	
	459+27.	1		14	
	459+45.		14		32
	459+80.	1		10	
	460+00.		12	15	
	460+06.		13	14	
	460+24.		1	10	
	460+44.		15	13	
	460+54.		15	10	
	460+84.	6		12	
	460+85.		2	8	
	460+94.		17	8	
	460+96.		16	9	
	461+07.	9			16
	461+09.		0		18
	STA. 461+09 TO STA. 480+20 TREE REMOVAL, ACRE				

TREE REMOVAL SCHEDULE

	STATION	OFFSET (FT) LT	OFFSET (FT) RT	6-15 UNITS	> 15 UNITS
FOREST PRESERVE DISTRICT OF COOK COUNTY	481+74.		8	15	
	481+83.		9.4		18
	481+86.		9.7		18
	481+92.		5	8	
	482+04.		9		16
	482+14.		11.4		16
	482+26.		7	8	
	482+30.		9.6		24
	482+50.		7.7		21
	482+59.		11	8	
	482+61.		8.4	8	
	482+64.		6		21
	483+33.		5.4	10	
	483+61.		9		32
	483+98.		8		21
	484+32.		9	10	
	485+08.		9		21
	485+24.		9		18
	486+88.		9		24
	487+20.		9	12	
	488+05.		7	12	
	489+26.		7	15	
	489+39.		8.6	13	
	489+52.		7.4	15	
	SUBTOTAL:			1002	975
	20% CONTIGENCY:			200	195
	TOTAL FPDCC:			1202	1170

TEMPORARY FENCE FOR TREE PROTECTION SCHEDULE

	STATION	OFFSET (FT) LT	OFFSET (FT) RT	FOOT
CITY OF BLUE ISLAND	424+90.	26		60
	428+10.	20		60
	436+77.	14		60
	438+26.	14		60
	439+18.		28	60
	443+82.		23	60
	445+86.	35		60
	446+13.		29	60
	TOTAL:			480

TEMPORARY FENCE FOR TREE PROTECTION SCHEDULE

	STATION	OFFSET (FT) LT	OFFSET (FT) RT	FOOT
FOREST PRESERVE DISTRICT OF COOK COUNTY	449+02.		40	60
	449+52.		25	60
	449+70.	25		60
	449+72.		25	60
	449+89.		25	60
	450+00.	13		60
	450+47.		16	60
	451+55.		22	60
	451+63.		20	60
	451+84.		30	60
	451+89.	18		60
	452+19.	21		60
	452+23.		33	60
	452+41.		29	60
	452+54.	27		60
	453+44.		29	60
	454+21.		27	60
	454+21.	21		60
	455+23.		29	60
	455+25.		27	60
	455+31.	17		60
	456+36.	18		60
	456+59.		26	60
	457+07.	16		60
	457+17.		25	60
	457+95.		23	60
	458+05.		19	60
	458+69.	14		60
	459+15.		14	60
	459+85.	12		60
	460+10.	15		60
	460+38.		19	60
	460+83.	11		60
	464+02.	15		60
	466+18.		24	60
	469+20.		11	60
	470+24.	16		60
	471+36.	26		60
	471+52.	30		60
	471+61.	31		60
	472+28.	15		60
	472+93.	13		60
	473+52.	16		60
	474+12.	22		60
	474+33.	20		60
	474+42.	17		60
	474+63.	17		60
	474+68.	17		60
	474+79.	18		60
	476+17.	20		60
	476+36.	16		60
	476+50.	13		60
	476+57.	14		60
	476+75.	15		60
	476+81.	15		60
	476+81.	15		60
	476+93.	16		60
	477+12.	16.5		60
	478+51.	15		60
	478+71.	17		60

TEMPORARY FENCE FOR TREE PROTECTION SCHEDULE

	STATION	OFFSET (FT) LT	OFFSET (FT) RT	FOOT
FOREST PRESERVE DISTRICT OF COOK COUNTY	483+11.		14	60
	483+17.		12	60
	483+24.		11	60
	483+27.		11	60
	483+39.		11	60
	483+46.		11	60
	483+56.		11	60
	483+63.		10	60
	483+65.		10	60
	483+82.		13	60
	484+03.		10	60
	484+11.		10	60
	484+13.		10	60
	484+41.		9	60
	484+43.		9	60
	484+48.		10	60
	484+54.		10	60
	484+66.		11	60
	484+78.		10	60
	484+86.		10	60
	485+39.		10	60
	485+54.		10	60
	485+66.		9	60
	485+68.		11	60
	485+94.		10	60
	486+04.		12	60
	486+06.		13	60
	486+23.		10	60
	486+35.		11	60
	486+44.		13	60
	486+53.		13	60
	486+66.		12	60
	487+02.		11	60
	487+20.		9	60
	487+22.		9	60
	487+28.		11	60
	487+34.		10	60
	487+39.		11	60
	487+44.		11	60
	488+77.		9	60
	TOTAL			6000

FILE NAME = P:\Blue Island_25367145_Cal-SagTrail\Phase 2\Roadway\BlueIslandEast\General\Schedules_Cal-Sag_BlueIE.dgn

AECOM
303 East Wacker Drive, Suite 1400, Chicago, IL 60601
T 1-312-373-7700 F 1-312-373-6800

USER NAME = ken_may	DESIGNED - KLM	REVISED -	
	DRAWN - KLM	REVISED -	
PLOT SCALE = 20.0000 ' / in.	CHECKED - BMC	REVISED -	
PLOT DATE = 8/4/2016 9:40:53 AM	DATE - AUGUST 5, 2016	REVISED -	

STATE OF ILLINOIS
DEPARTMENT OF TRANSPORTATION

CAL-SAG GREENWAY TRAIL (BLUE ISLAND EAST SEGMENT)
SCHEDULES

SHEET NO. OF SHEETS STA. TO STA.

SECTION	COUNTY	TOTAL SHEETS	SHEET NO.
08-00178-02-BT	COOK	64	7

CONTRACT NO. 61C12

FED. ROAD DIST. NO. 1 | ILLINOIS | FED. AID PROJECT

* LIMIT OF PAYMENT FOR ASPHALT, BITUMINOUS MATERIAL, AND AGGREGATE BASES

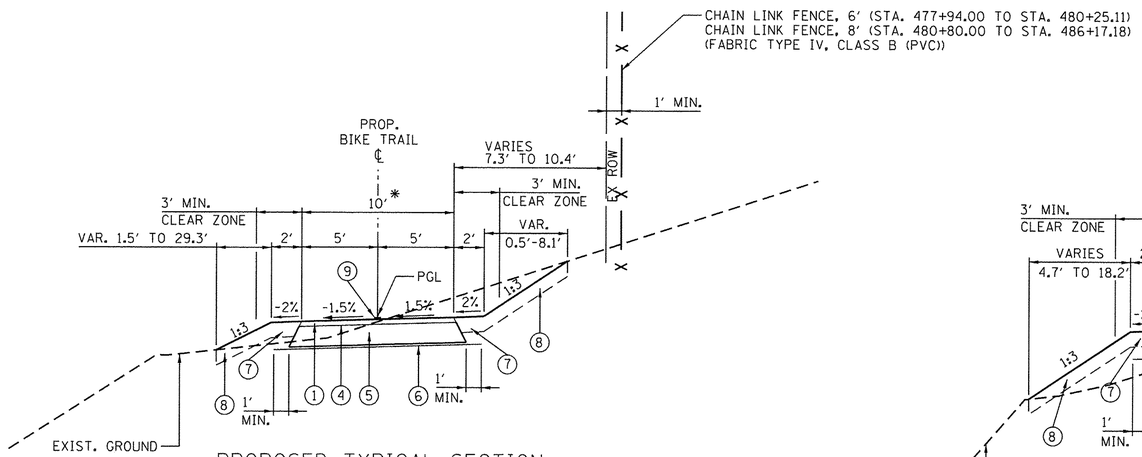

PROPOSED TYPICAL SECTION

STA. 422+45.00 TO STA. 431+00.00
(LOOKING EAST)
STA. 477+94.00 TO STA. 486+17.18
(LOOKING SOUTH)
OMMISSION: ASHLAND AVE. BRIDGE SLOPE WALL MODIFICATION
STA. 423+87.90 TO STA. 424+56.90

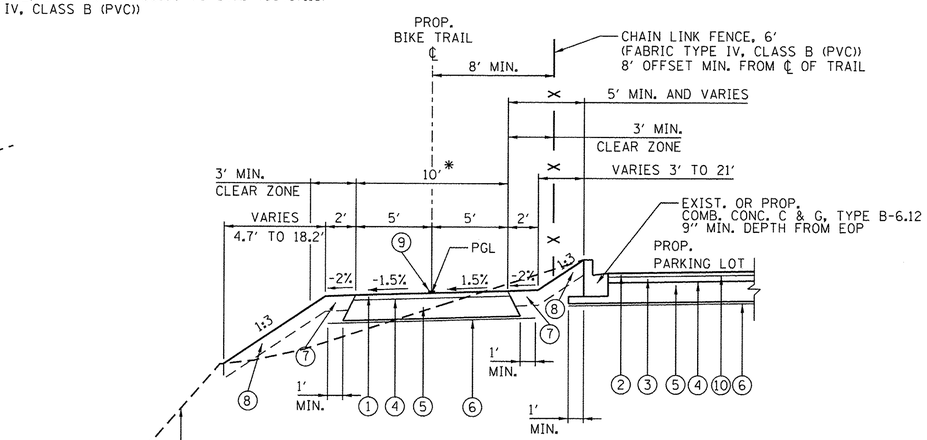

PROPOSED TYPICAL SECTION

STA. 471+96.17 TO STA. 477+94.00
(LOOKING EAST)

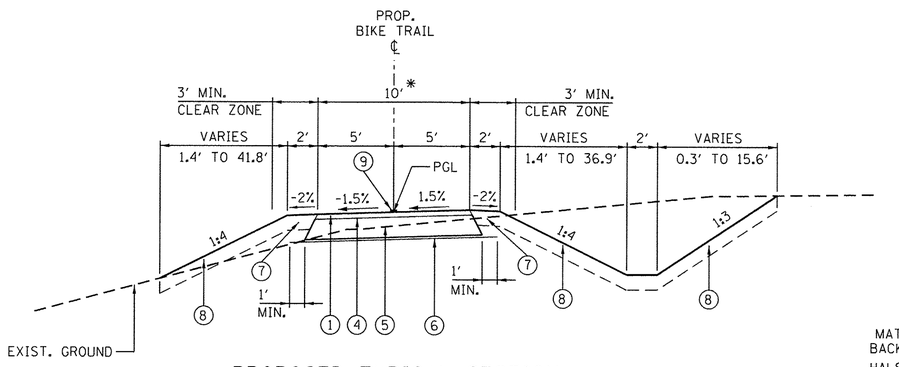

PROPOSED TYPICAL SECTION

STA. 431+00.00 TO STA. 471+96.17
(LOOKING EAST)
OMISSION: LITTLE CALUMET RIVER PEDESTRIAN BRIDGE
STA. 445+86.95 TO STA. 449+26.95

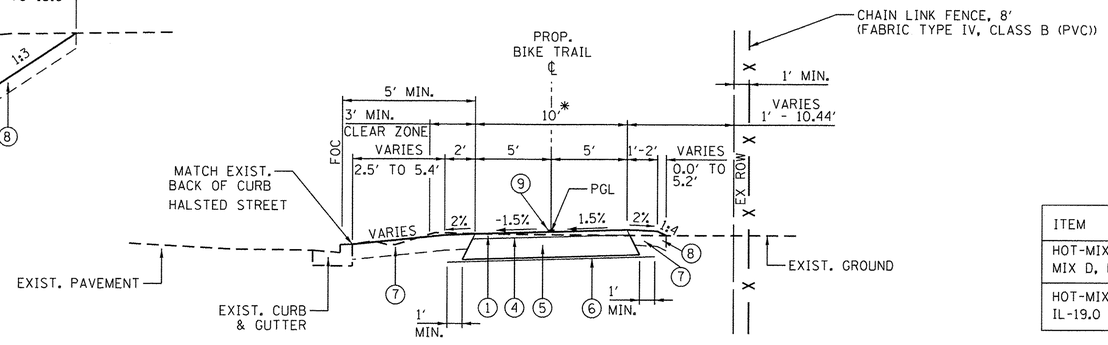

PROPOSED TYPICAL SECTION

STA. 486+17.18 TO STA. 492+09.96
(LOOKING SOUTH)

LEGEND:

1. HOT-MIX ASPHALT SURFACE COURSE, MIX "D", N50, 2"
2. HOT-MIX ASPHALT SURFACE COURSE, MIX "D", N50, 1.5"
3. HOT-MIX ASPHALT BINDER COURSE, MIX "D", 19.0, N50, 2.25"
4. BITUMINOUS MATERIALS (PRIME COAT)
5. AGGREGATE BASE COURSE, TYPE B, 8"
6. GEOTECHNICAL FABRIC FOR GROUND STABILIZATION
7. TOPSOIL FURNISH AND PLACE, 6", AND SEEDING, CLASS 1B
8. TOPSOIL FURNISH AND PLACE, 6", AND SEEDING, CLASS 4A (MODIFIED)
9. PAINT PAVEMENT MARKING, 4" YELLOW
10. BITUMINOUS MATERIALS (TACK COAT)

NOTE 1:

WHERE UNSUITABLE MATERIAL UNDERLIES THE BIKE TRAIL, SHOULDERS AND/OR EMBANKMENT, AS DETERMINED BY THE ENGINEER, THE SUBGRADE TREATMENT WILL CONSIST OF EXCAVATION OF SUCH UNSUITABLE MATERIAL TO A DEPTH 12" BELOW AGGREGATE BASE COURSE AND PLACEMENT OF 12" OF AGGREGATE SUBGRADE IMPROVEMENT AND A GEOTECHNICAL FABRIC FOR GROUND STABILIZATION.

NOTE 2:

ADDITIONAL FILL MATERIAL TO BE PLACED ABOVE FABRIC IN CUT SECTIONS SHALL NOT BE MEASURED FOR PAYMENT. MATERIAL SHALL BE SUITABLE EMBANKMENT MATERIAL.

NOTE 3:

AT ALL INTERSECTIONS OF BIKE PATH AND ROADWAYS, DEPRESS THE CURB (IF APPLICABLE) AND MAINTAIN EXISTING PAVEMENT ELEVATIONS.

BITUMINOUS MIXTURE REQUIREMENTS

ITEM	VOIDS	USAGE
HOT-MIX ASPHALT SURFACE COURSE, MIX D, N50 (IL 9.5mm)	4% @ 50 GYR	BIKE PATH SURFACE & PARKING LOT
HOT-MIX ASPHALT BINDER COURSE, IL-19.0 N50	4% @ 50 GYR	PARKING LOT BINDER

THE UNIT WEIGHT USED TO CALCULATE ALL HMA SURFACE MIXTURES IS 112 LBS/SQYD/IN.

THE "AC TYPE" SHALL BE "PG 64-22" UNLESS MODIFIED BY DISTRICT ONE SPECIAL PROVISIONS

FOR USE OF RECYCLED MATERIALS SEE SPECIAL PROVISIONS.

PROP. CURVE 2
PI STA. = 423+18.24
Δ = 25° 28' 40" (LT)
D = 57° 17' 45"
R = 100.00'
T = 22.61'
L = 44.47'
E = 2.52'
P.C. STA. = 422+95.63
P.T. STA. = 423+40.10

PROP. CURVE 3
PI STA. = 423+65.44
Δ = 28° 26' 47" (RT)
D = 57° 17' 45"
R = 100.00'
T = 25.35'
L = 49.65'
E = 3.16'
P.C. STA. = 423+40.10
P.T. STA. = 423+89.75

PROP. CURVE 4
PI STA. = 424+82.90
Δ = 8° 37' 44" (LT)
D = 22° 55' 06"
R = 250.00'
T = 18.86'
L = 37.65'
E = 0.71'
P.C. STA. = 424+64.04
P.T. STA. = 425+01.69

PROP. CURVE 5
PI STA. = 428+88.54
Δ = 6° 31' 08" (RT)
D = 19° 05' 55"
R = 300.00'
T = 17.09'
L = 34.13'
E = 0.49'
P.C. STA. = 428+71.45
P.T. STA. = 429+05.58

PROP. CURVE 6
PI STA. = 431+66.86
Δ = 6° 30' 55" (LT)
D = 5° 43' 46"
R = 1,000.00'
T = 56.92'
L = 113.71'
E = 1.62'
P.C. STA. = 431+09.94
P.T. STA. = 432+23.65

PROP. CURVE 7
PI STA. = 433+25.06
Δ = 11° 36' 28" (RT)
D = 11° 27' 33"
R = 500.00'
T = 77.44'
L = 153.66'
E = 5.96'
P.C. STA. = 432+47.62
P.T. STA. = 434+01.27

PROP. CURVE 8
PI STA. = 435+54.15
Δ = 41° 52' 36" (LT)
D = 38° 11' 50"
R = 150.00'
T = 57.39'
L = 109.63'
E = 10.61'
P.C. STA. = 434+96.76
P.T. STA. = 436+06.39

PROP. CURVE 9
PI STA. = 436+85.49
Δ = 21° 35' 33" (RT)
D = 38° 11' 50"
R = 150.00'
T = 28.60'
L = 56.53'
E = 2.70'
P.C. STA. = 436+56.88
P.T. STA. = 437+13.41

PROP. CURVE 10
PI STA. = 438+21.82
Δ = 8° 03' 36" (LT)
D = 28° 38' 52"
R = 200.00'
T = 14.09'
L = 28.13'
E = 0.50'
P.C. STA. = 438+07.73
P.T. STA. = 438+35.87

PROP. CURVE 11
PI STA. = 439+29.21
Δ = 7° 33' 04" (RT)
D = 28° 38' 52"
R = 200.00'
T = 13.20'
L = 26.36'
E = 0.44'
P.C. STA. = 439+16.01
P.T. STA. = 439+42.37

PROP. CURVE 12
PI STA. = 442+54.72
Δ = 44° 36' 42" (RT)
D = 19° 05' 55"
R = 300.00'
T = 123.07'
L = 233.59'
E = 24.26'
P.C. STA. = 441+31.64
P.T. STA. = 443+65.23

PROP. CURVE 13
PI STA. = 450+00.14
Δ = 78° 24' 01" (LT)
D = 57° 17' 45"
R = 100.00'
T = 81.56'
L = 136.83'
E = 29.04'
P.C. STA. = 449+18.58
P.T. STA. = 450+55.41

PROP. CURVE 14
PI STA. = 451+31.94
Δ = 22° 10' 37" (RT)
D = 38° 11' 50"
R = 150.00'
T = 29.40'
L = 58.06'
E = 2.85'
P.C. STA. = 451+02.54
P.T. STA. = 451+60.60

PROP. CURVE 15
PI STA. = 452+71.48
Δ = 21° 16' 54" (LT)
D = 38° 11' 50"
R = 150.00'
T = 28.18'
L = 55.72'
E = 2.62'
P.C. STA. = 452+43.29
P.T. STA. = 452+99.01

PROP. CURVE 16
PI STA. = 453+67.81
Δ = 15° 14' 00" (RT)
D = 19° 05' 55"
R = 300.00'
T = 40.12'
L = 79.76'
E = 2.67'
P.C. STA. = 453+27.69
P.T. STA. = 454+07.45

PROP. CURVE 17
PI STA. = 458+71.68
Δ = 32° 26' 44" (RT)
D = 19° 05' 55"
R = 300.00'
T = 87.29'
L = 169.88'
E = 12.44'
P.C. STA. = 457+84.39
P.T. STA. = 459+54.27

PROP. CURVE 18
PI STA. = 462+44.93
Δ = 13° 01' 54" (RT)
D = 28° 38' 52"
R = 200.00'
T = 22.84'
L = 45.49'
E = 1.30'
P.C. STA. = 462+22.08
P.T. STA. = 462+67.57

PROP. CURVE 19
PI STA. = 463+71.42
Δ = 24° 21' 23" (LT)
D = 28° 38' 52"
R = 200.00'
T = 43.16'
L = 85.02'
E = 4.60'
P.C. STA. = 463+28.26
P.T. STA. = 464+13.28

PROP. CURVE 20
PI STA. = 468+30.52
Δ = 33° 56' 44" (RT)
D = 57° 17' 45"
R = 100.00'
T = 30.52'
L = 59.25'
E = 4.55'
P.C. STA. = 468+00.00
P.T. STA. = 468+59.25

PROP. CURVE 21
PI STA. = 468+81.72
Δ = 25° 19' 53" (LT)
D = 57° 17' 45"
R = 100.00'
T = 22.47'
L = 44.21'
E = 2.49'
P.C. STA. = 468+59.25
P.T. STA. = 469+03.46

PROP. CURVE 22
PI STA. = 471+81.59
Δ = 36° 46' 23" (LT)
D = 57° 17' 45"
R = 100.00'
T = 33.24'
L = 64.18'
E = 5.38'
P.C. STA. = 471+48.36
P.T. STA. = 472+12.54

PROP. CURVE 23
PI STA. = 472+45.78
Δ = 36° 46' 23" (RT)
D = 57° 17' 45"
R = 100.00'
T = 33.24'
L = 64.18'
E = 5.38'
P.C. STA. = 472+12.54
P.T. STA. = 472+76.72

PROP. CURVE 24
PI STA. = 475+12.65
Δ = 24° 37' 22" (LT)
D = 57° 17' 45"
R = 100.00'
T = 21.82'
L = 42.97'
E = 2.35'
P.C. STA. = 474+90.82
P.T. STA. = 475+33.80

PROP. CURVE 25
PI STA. = 475+55.62
Δ = 24° 37' 22" (RT)
D = 57° 17' 45"
R = 100.00'
T = 21.82'
L = 42.97'
E = 2.35'
P.C. STA. = 475+33.80
P.T. STA. = 475+76.77

PROP. CURVE 26
PI STA. = 479+93.68
Δ = 89° 50' 27" (RT)
D = 57° 17' 45"
R = 100.00'
T = 99.72'
L = 156.80'
E = 41.23'
P.C. STA. = 478+93.96
P.T. STA. = 480+50.76

PROP. CURVE 27
PI STA. = 485+83.02
Δ = 5° 03' 34" (LT)
D = 19° 05' 55"
R = 300.00'
T = 13.25'
L = 26.49'
E = 0.29'
P.C. STA. = 485+69.77
P.T. STA. = 485+96.26

PROP. CURVE 28
PI STA. = 486+12.52
Δ = 6° 12' 14" (RT)
D = 19° 05' 55"
R = 300.00'
T = 16.26'
L = 32.48'
E = 0.44'
P.C. STA. = 485+96.26
P.T. STA. = 486+28.75

PROP. CURVE 29
PI STA. = 489+67.01
Δ = 0° 52' 46" (RT)
D = 2° 51' 53"
R = 2,000.00'
T = 15.35'
L = 30.70'
E = 0.06'
P.C. STA. = 489+51.66
P.T. STA. = 489+82.36

AECOM
303 East Wacker Drive, Suite 1400, Chicago, IL 60601
T 1-312-373-7700 F 1-312-373-6800

USER NAME = ken_moy	DESIGNED - KLM	REVISED -
	DRAWN - KLM	REVISED -
PLOT SCALE = 200.0000 ' / in.	CHECKED - BMC	REVISED -
PLOT DATE = 8/4/2016 9:41:19 AM	DATE - AUGUST 5, 2016	REVISED -

FILE NAME = P:\Blue Island_25367145_Cal-SagTrail\Phase 2\Roadway\BlueIslandEast\General\alignment & ties.dgn

STATE OF ILLINOIS
DEPARTMENT OF TRANSPORTATION

CAL-SAG GREENWAY TRAIL (BLUE ISLAND EAST SEGMENT)
ALIGNMENT, TIES & BENCHMARKS

SHEET NO. OF SHEETS | STA. TO STA.

SECTION	COUNTY	TOTAL SHEETS	SHEET NO.
08-00178-02-BT	COOK	64	9
	CONTRACT NO. 61C12		

FED. ROAD DIST. NO. 1 | ILLINOIS | FED. AID PROJECT

PROP. CURVE 2
PI STA. = 423+18.24
Δ = 25° 28′ 40″ (LT)
D = 57° 17′ 45″
R = 100.00′
T = 22.61′
L = 44.47′
E = 2.52′
P.C. STA. = 422+95.63
P.T. STA. = 423+40.10

PROP. CURVE 3
PI STA. = 423+65.44
Δ = 28° 26′ 47″ (RT)
D = 57° 17′ 45″
R = 100.00′
T = 25.35′
L = 49.65′
E = 3.16′
P.C. STA. = 423+40.10
P.T. STA. = 423+89.75

PROP. CURVE 4
PI STA. = 424+82.90
Δ = 8° 37′ 44″ (LT)
D = 22° 55′ 06″
R = 250.00′
T = 18.86′
L = 37.65′
E = 0.71′
P.C. STA. = 424+64.04
P.T. STA. = 425+01.69

PROP. CURVE 5
PI STA. = 428+88.54
Δ = 6° 31′ 08″ (RT)
D = 19° 05′ 55″
R = 300.00′
T = 17.09′
L = 34.13′
E = 0.49′
P.C. STA. = 428+71.45
P.T. STA. = 429+05.58

PROP. CURVE 6
PI STA. = 431+66.86
Δ = 6° 30′ 55″ (LT)
D = 5° 43′ 46″
R = 1,000.00′
T = 56.92′
L = 113.71′
E = 1.62′
P.C. STA. = 431+09.94
P.T. STA. = 432+23.65

PROP. CURVE 7
PI STA. = 433+25.06
Δ = 17° 36′ 28″ (RT)
D = 11° 27′ 33″
R = 500.00′
T = 77.44′
L = 153.66′
E = 5.96′
P.C. STA. = 432+47.62
P.T. STA. = 434+01.27

PROP. CURVE 8
PI STA. = 435+54.15
Δ = 41° 52′ 36″ (LT)
D = 38° 11′ 50″
R = 150.00′
T = 57.39′
L = 109.63′
E = 10.61′
P.C. STA. = 434+96.76
P.T. STA. = 436+06.39

LEGEND

- DITCH FLOW
- DITCH SUMMIT
- DITCH CHECK
- EXISTING MANHOLE
- EXISTING CATCH BASIN
- EXISTING INLET
- EXISTING HANDHOLE
- EXISTING FENCE
- REINFORCED CONCRETE FLARED END SECTION (FES)
- TREE REMOVAL (SEE SCHEDULE)
- TEMPORARY FENCE FOR TREE PROTECTION (SEE SCHEDULE)
- PERIMETER EROSION BARRIER
- PROPOSED TREE (SEE SCHEDULE)

N

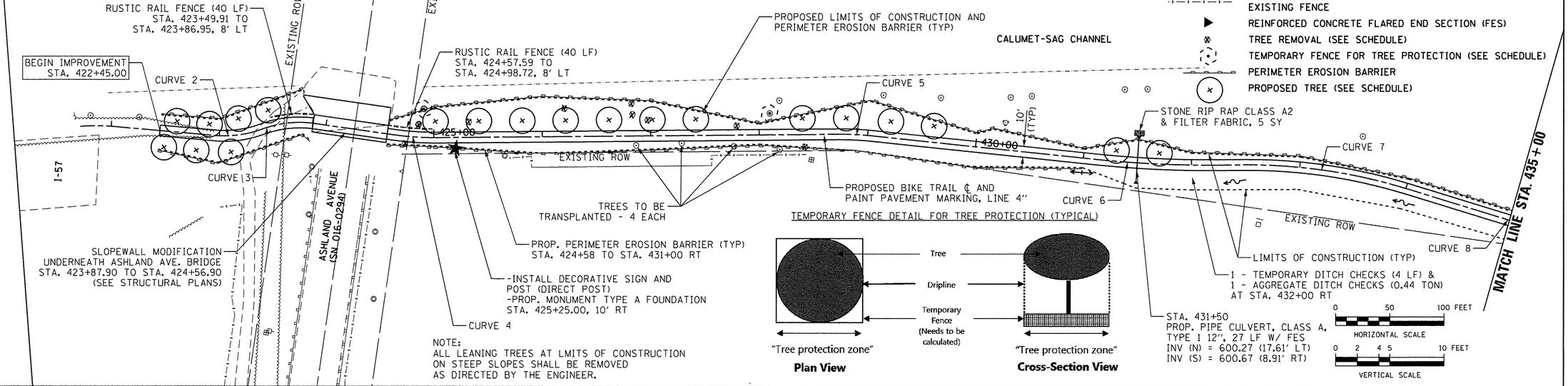

NOTE:
ALL LEANING TREES AT LMITS OF CONSTRUCTION
ON STEEP SLOPES SHALL BE REMOVED
AS DIRECTED BY THE ENGINEER.

TEMPORARY FENCE DETAIL FOR TREE PROTECTION (TYPICAL)

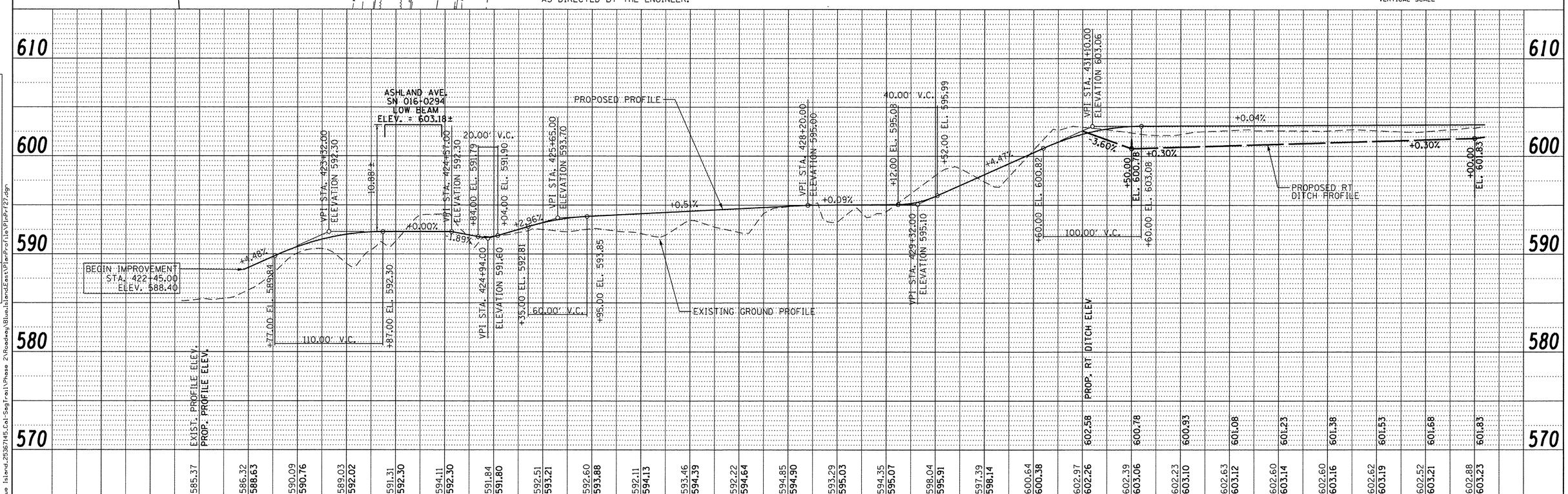

PLAN	BY	DATE
SURVEYED		
PLOTTED		
ALIGNMENT CHECKED		
TOPOGRAPHY CHECKED		
CADD FILE NAME		
NOTE BOOK NO.		

PROFILE	BY	DATE
SURVEYED		
PLOTTED		
GRADES CHECKED		
B.M. NOTED		
STRUCTURE NOTATNS CHKD		
NOTE BOOK NO.		

FILE NAME P:\Blue Island_25367145_Cal-SagTrail\Phase 2\Roadway\BlueIslandEast\PlanProfile\PlnPrf27.dgn

AECOM
303 East Wacker Drive, Suite 1400, Chicago, IL 60601
T 1-312-373-7700 F 1-312-373-6800

USER NAME = ken_moy	DESIGNED - KLM	REVISED -	
	DRAWN - KLM	REVISED -	
PLOT SCALE = 50.0000 ′ / in.	CHECKED - BMC	REVISED -	
PLOT DATE = 8/4/2016	DATE - AUGUST 5, 2016	REVISED -	

STATE OF ILLINOIS
DEPARTMENT OF TRANSPORTATION

CAL-SAG GREENWAY TRAIL (BLUE ISLAND EAST SEGMENT)
PLAN AND PROFILE

SCALE: | SHEET NO. 1 OF 6 SHEETS | STA. 421+00 TO STA. 435+00

SECTION	COUNTY	TOTAL SHEETS	SHEET NO.
08-00178-02-BT	COOK	64	10

FED. ROAD DIST. NO. | ILLINOIS | FED. AID PROJECT

CONTRACT NO. 61C12

PROP. CURVE 8
PI STA. = 435+54.15
Δ = 41° 52′ 36″ (LT)
D = 38° 11′ 50″
R = 150.00′
T = 57.39′
L = 109.63′
E = 10.61′
P.C. STA. = 434+96.76
P.T. STA. = 436+06.39

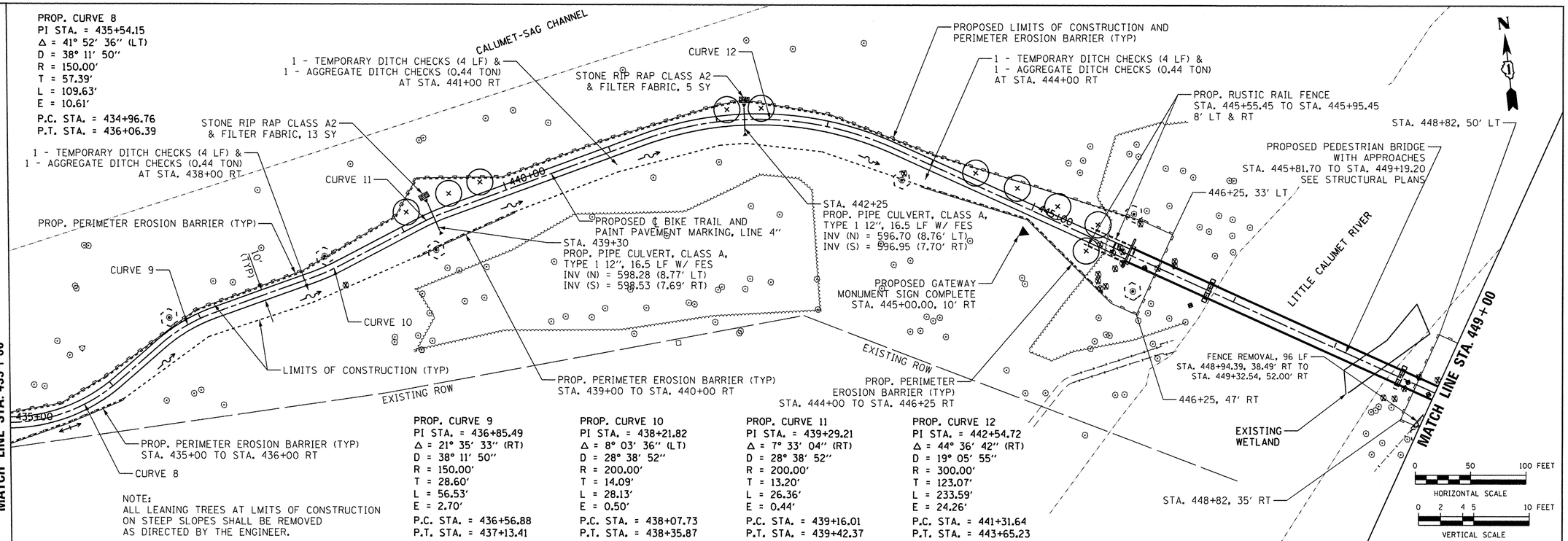

NOTE:
ALL LEANING TREES AT LMITS OF CONSTRUCTION ON STEEP SLOPES SHALL BE REMOVED AS DIRECTED BY THE ENGINEER.

PROP. CURVE 9	PROP. CURVE 10	PROP. CURVE 11	PROP. CURVE 12
PI STA. = 436+85.49	PI STA. = 438+21.82	PI STA. = 439+29.21	PI STA. = 442+54.72
Δ = 21° 35′ 33″ (RT)	Δ = 8° 03′ 36″ (LT)	Δ = 7° 33′ 04″ (RT)	Δ = 44° 36′ 42″ (RT)
D = 38° 11′ 50″	D = 28° 38′ 52″	D = 28° 38′ 52″	D = 19° 05′ 55″
R = 150.00′	R = 200.00′	R = 200.00′	R = 300.00′
T = 28.60′	T = 14.09′	T = 13.20′	T = 123.07′
L = 56.53′	L = 28.13′	L = 26.36′	L = 233.59′
E = 2.70′	E = 0.50′	E = 0.44′	E = 24.26′
P.C. STA. = 436+56.88	P.C. STA. = 438+07.73	P.C. STA. = 439+16.01	P.C. STA. = 441+31.64
P.T. STA. = 437+13.41	P.T. STA. = 438+35.87	P.T. STA. = 439+42.37	P.T. STA. = 443+65.23

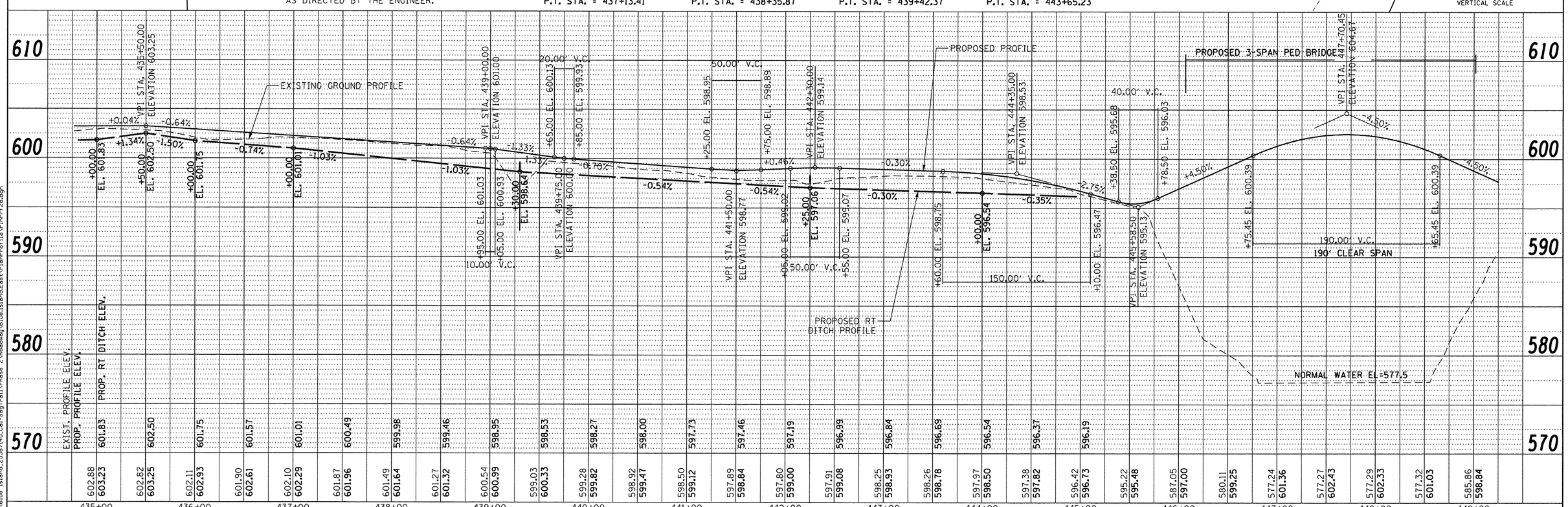

AECOM
303 East Wacker Drive, Suite 1400, Chicago, IL 60601
T 1-312-373-7700 F 1-312-373-6800

USER NAME = ken_may	DESIGNED - KLM	REVISED -	
	DRAWN - KLM	REVISED -	
PLOT SCALE = 50.0000 ′ / in.	CHECKED - BMC	REVISED -	
PLOT DATE = 8/4/2016	DATE - AUGUST 5, 2016	REVISED -	

STATE OF ILLINOIS
DEPARTMENT OF TRANSPORTATION

CAL-SAG GREENWAY TRAIL (BLUE ISLAND EAST SEGMENT)
PLAN AND PROFILE

SCALE: | SHEET NO. 2 OF 6 SHEETS | STA. 435+00 TO STA. 449+00

SECTION	COUNTY	TOTAL SHEETS	SHEET NO.
08-00178-02-BT	COOK	64	11

FED. ROAD DIST. NO. | ILLINOIS | FED. AID PROJECT

CONTRACT NO. 61C12

FILE NAME P:\Blue Island_25367145_Cal-Sag Trail\Phase 2\Roadway\Blue Island East\Plan Profile\PlnPrf28.dgn

PROP. CURVE 13
PI STA. = 450+00.14
Δ = 78° 24′ 01″ (LT)
D = 57° 17′ 45″
R = 100.00′
T = 81.56′
L = 136.83′
E = 29.04′
P.C. STA. = 449+18.58
P.T. STA. = 450+55.41

PROP. CURVE 14
PI STA. = 451+31.94
Δ = 22° 10′ 37″ (RT)
D = 38° 11′ 50″
R = 150.00′
T = 29.40′
L = 58.06′
E = 2.85′
P.C. STA. = 451+02.54
P.T. STA. = 451+60.60

NOTE:
ALL LEANING TREES AT LMITS OF CONSTRUCTION ON STEEP SLOPES SHALL BE REMOVED AS DIRECTED BY THE ENGINEER.

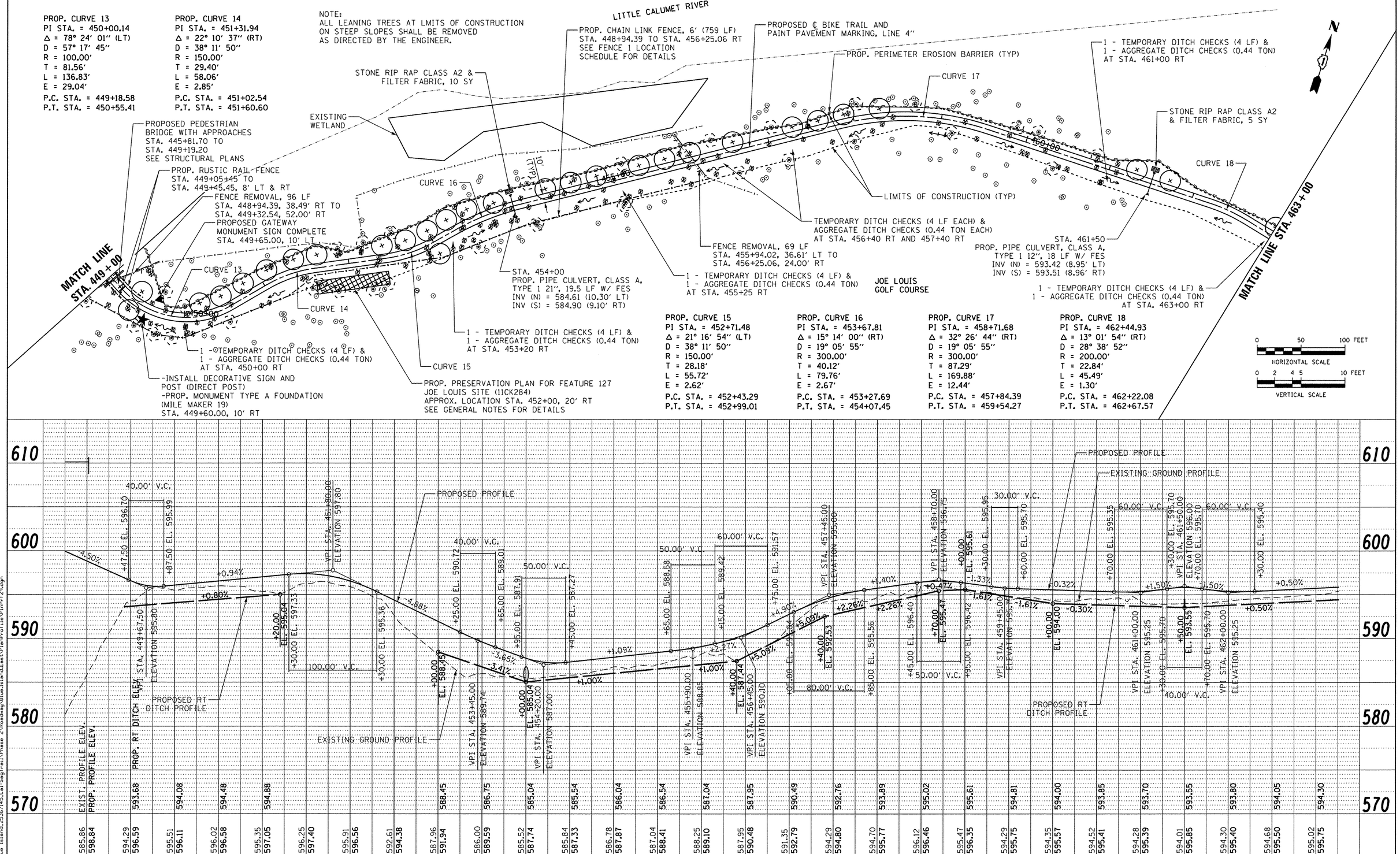

PROP. CURVE 15
PI STA. = 452+71.48
Δ = 21° 16′ 54″ (LT)
D = 38° 11′ 50″
R = 150.00′
T = 28.18′
L = 55.72′
E = 2.62′
P.C. STA. = 452+43.29
P.T. STA. = 452+99.01

PROP. CURVE 16
PI STA. = 453+67.81
Δ = 15° 14′ 00″ (RT)
D = 19° 05′ 55″
R = 300.00′
T = 40.12′
L = 79.76′
E = 2.67′
P.C. STA. = 453+27.69
P.T. STA. = 454+07.45

PROP. CURVE 17
PI STA. = 458+71.68
Δ = 32° 26′ 44″ (RT)
D = 19° 05′ 55″
R = 300.00′
T = 87.29′
L = 169.88′
E = 12.44′
P.C. STA. = 457+84.39
P.T. STA. = 459+54.27

PROP. CURVE 18
PI STA. = 462+44.93
Δ = 13° 01′ 54″ (RT)
D = 28° 38′ 52″
R = 200.00′
T = 22.84′
L = 45.49′
E = 1.30′
P.C. STA. = 462+22.08
P.T. STA. = 462+67.57

EXIST. PROFILE ELEV.	PROP. PROFILE ELEV.	PROP. RT DITCH ELEV.
585.86	598.84	593.68
594.29	596.59	593.68
595.51	596.11	594.08
596.02	596.58	594.48
595.35	597.05	594.88
596.25	597.40	
595.91	596.56	
592.61	594.38	
587.96	591.94	588.45
586.00	589.59	586.75
585.52	587.74	585.04
585.84	587.33	585.54
586.78	587.87	586.04
587.04	588.41	586.54
588.25	589.10	587.04
587.95	590.48	587.95
591.35	592.79	590.49
594.29	594.80	592.76
594.70	595.77	593.89
596.12	596.46	595.02
595.47	596.35	595.61
594.29	595.75	594.81
594.35	595.57	594.00
594.52	595.41	593.85
594.28	595.39	593.70
594.01	595.85	593.55
594.30	595.40	593.80
594.68	595.50	594.05
595.02	595.75	594.30

AECOM
303 East Wacker Drive, Suite 1400, Chicago, IL 60601
T 1-312-373-7700 F 1-312-373-6800

USER NAME = ken_may	DESIGNED - KLM	REVISED -
	DRAWN - KLM	REVISED -
PLOT SCALE = 50.0000 ′ / in.	CHECKED - BMC	REVISED -
PLOT DATE = 8/4/2016	DATE - AUGUST 5, 2016	REVISED -

STATE OF ILLINOIS
DEPARTMENT OF TRANSPORTATION

CAL-SAG GREENWAY TRAIL (BLUE ISLAND EAST SEGMENT)
PLAN AND PROFILE

SCALE: | SHEET NO. 3 OF 6 SHEETS | STA. 449+00 TO STA. 463+00

SECTION	COUNTY	TOTAL SHEETS	SHEET NO.
08-00178-02-BT	COOK	64	12
FED. ROAD DIST. NO. / ILLINOIS / FED. AID PROJECT	CONTRACT NO. 61C12		

FILE NAME P:\Blue Island.25367145.Cal-SagTrail\Phase 2\Roadway\BlueIslandEast\PlanProfile\PlnPrf29.dgn

PLAN: SURVEYED / PLOTTED / ALIGNMENT CHECKED / RT. OF WAY CHECKED / CADD FILE NAME / NOTE BOOK NO. / BY / DATE

PROFILE: SURVEYED / PLOTTED / GRADES CHECKED / STRUCTURE NOTATNS CHKD / NOTE BOOK NO. / BY / DATE

NOTES:
1. NO CONTRACTOR ACCESS OR WORK ADJACENT TO THE GOLF COURSE PARKING LOT WILL BE ALLOWED ON SATURDAYS AND SUNDAYS FROM MAY THROUGH SEPTEMBER.

2. ALL LEANING TREES AT LMITS OF CONSTRUCTION ON STEEP SLOPES SHALL BE REMOVED AS DIRECTED BY THE ENGINEER.

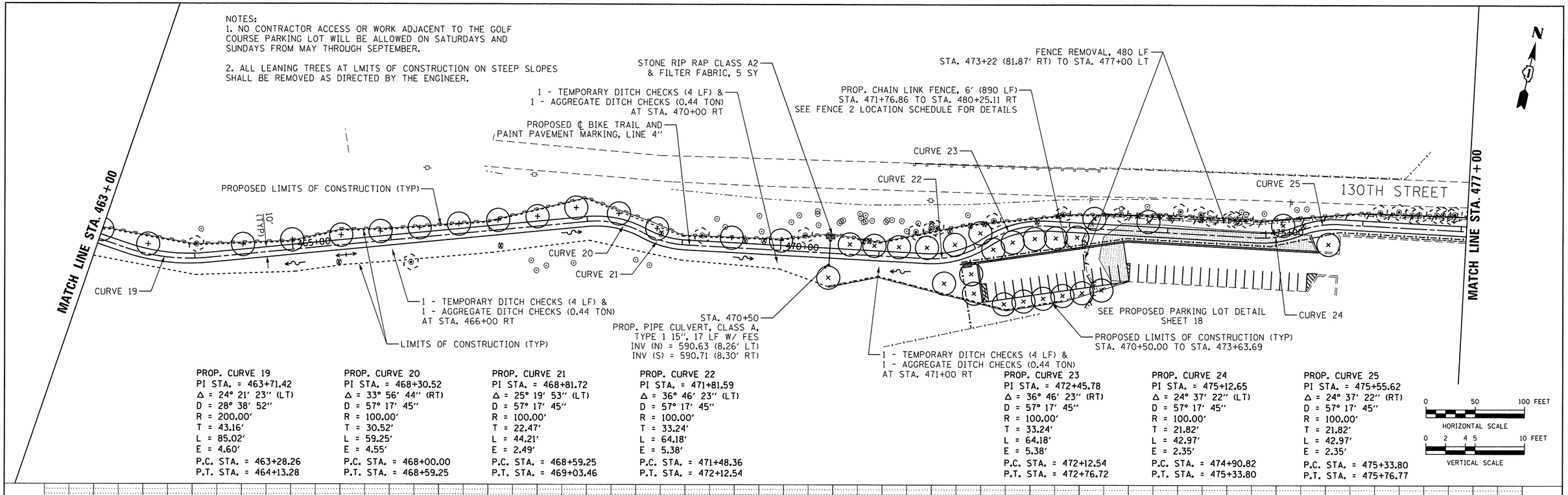

PROP. CURVE 19
PI STA. = 463+71.42
Δ = 24° 21' 23" (LT)
D = 28° 38' 52"
R = 200.00'
T = 43.16'
L = 85.02'
E = 4.60'
P.C. STA. = 463+28.26
P.T. STA. = 464+13.28

PROP. CURVE 20
PI STA. = 468+30.52
Δ = 33° 56' 44" (RT)
D = 57° 17' 45"
R = 100.00'
T = 30.52'
L = 59.25'
E = 4.55'
P.C. STA. = 468+00.00
P.T. STA. = 468+59.25

PROP. CURVE 21
PI STA. = 468+81.72
Δ = 25° 19' 53" (LT)
D = 57° 17' 45"
R = 100.00'
T = 22.47'
L = 44.21'
E = 2.49'
P.C. STA. = 468+59.25
P.T. STA. = 469+03.46

PROP. CURVE 22
PI STA. = 471+81.59
Δ = 36° 46' 23" (LT)
D = 57° 17' 45"
R = 100.00'
T = 33.24'
L = 64.18'
E = 5.38'
P.C. STA. = 471+48.36
P.T. STA. = 472+12.54

PROP. CURVE 23
PI STA. = 472+45.78
Δ = 36° 46' 23" (RT)
D = 57° 17' 45"
R = 100.00'
T = 33.24'
L = 64.18'
E = 5.38'
P.C. STA. = 472+12.54
P.T. STA. = 472+76.72

PROP. CURVE 24
PI STA. = 475+12.65
Δ = 24° 37' 22" (LT)
D = 57° 17' 45"
R = 100.00'
T = 21.82'
L = 42.97'
E = 2.35'
P.C. STA. = 474+90.82
P.T. STA. = 475+33.80

PROP. CURVE 25
PI STA. = 475+55.62
Δ = 24° 37' 22" (RT)
D = 57° 17' 45"
R = 100.00'
T = 21.82'
L = 42.97'
E = 2.35'
P.C. STA. = 475+33.80
P.T. STA. = 475+76.77

0 50 100 FEET
HORIZONTAL SCALE
0 2 4 5 10 FEET
VERTICAL SCALE

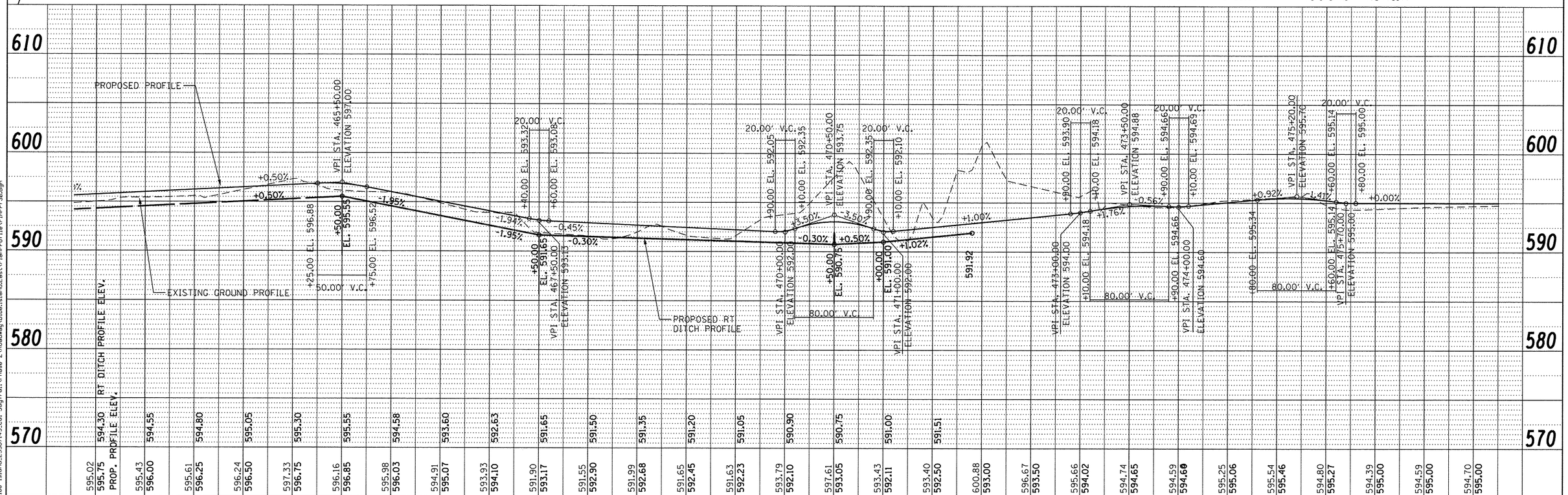

595.02	595.75	595.43	596.00
595.61	596.25	596.24	596.50
597.33	596.75	596.16	596.85
595.98	596.03	594.91	595.07
593.93	594.10	591.90	593.17
591.55	592.90	591.99	592.68
591.65	592.45	591.63	592.23
593.79	592.10	597.61	593.05
593.43	592.11	593.40	592.50
600.88	593.00	596.67	593.50
595.66	594.02	594.74	594.65
594.59	594.60	595.25	595.06
595.54	595.46	594.80	595.27
594.39	595.00	594.59	595.00
594.70	595.00		

594.30	594.55	594.80	595.05
595.30	595.55	594.58	593.60
592.63	591.65	591.50	591.35
591.20	591.05	590.90	590.75
591.00	591.51		

PLAN
SURVEYED
PLOTTED
ALIGNMENT CHECKED
RIGHT OF WAY CHECKED
CADD FILE NAME
NOTE BOOK
NO.
BY
DATE

PROFILE
SURVEYED
PLOTTED
GRADES CHECKED
B.M. NOTED
STRUCTURE NOTAT'NS CH'KD
NOTE BOOK
NO.
BY
DATE

FILE NAME P:\Blue Island_25367145_Cal-Sag Trail\Phase 2\Roadway\Blue Island East\PlanProfile\PlnPrf30.dgn

AECOM
303 East Wacker Drive, Suite 1400, Chicago, IL 60601
T 1-312-373-7700 F 1-312-373-6800

USER NAME = ken_moy	DESIGNED - KLM	REVISED -
	DRAWN - KLM	REVISED -
PLOT SCALE = 50.0000 ' / in.	CHECKED - BMC	REVISED -
PLOT DATE = 8/4/2016	DATE - AUGUST 5, 2016	REVISED -

STATE OF ILLINOIS
DEPARTMENT OF TRANSPORTATION

CAL-SAG GREENWAY TRAIL (BLUE ISLAND EAST SEGMENT)
PLAN AND PROFILE

SCALE: | SHEET NO. 4 OF 6 SHEETS | STA. 463+00 TO STA. 477+00

SECTION	COUNTY	TOTAL SHEETS	SHEET NO.
08-00178-02-BT	COOK	64	13

FED. ROAD DIST. NO. | ILLINOIS | FED. AID PROJECT

CONTRACT NO. 61C12

NOTES:
1. NO CONTRACTOR ACCESS OR WORK ADJACENT TO THE GOLF COURSE PARKING LOT WILL BE ALLOWED ON SATURDAYS AND SUNDAYS FROM MAY THROUGH SEPTEMBER.
2. ALL LEANING TREES AT LMITS OF CONSTRUCTION ON STEEP SLOPES SHALL BE REMOVED AS DIRECTED BY THE ENGINEER.

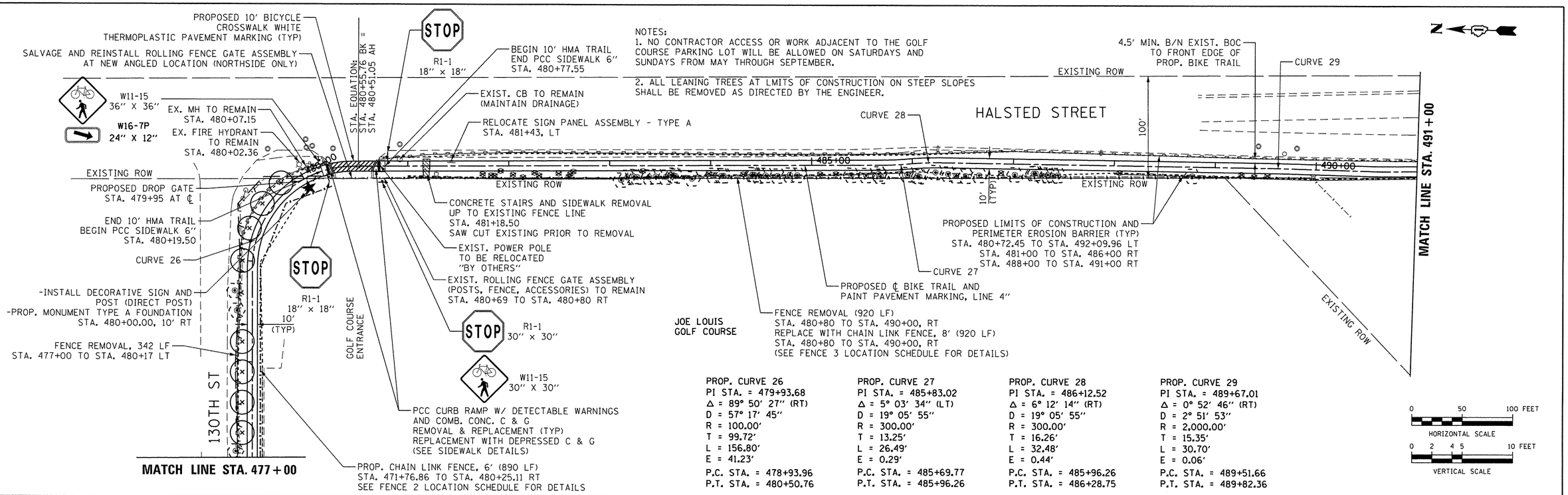

PROP. CURVE 26	PROP. CURVE 27	PROP. CURVE 28	PROP. CURVE 29
PI STA. = 479+93.68	PI STA. = 485+83.02	PI STA. = 486+12.52	PI STA. = 489+67.01
Δ = 89° 50' 27" (RT)	Δ = 5° 03' 34" (LT)	Δ = 6° 12' 14" (RT)	Δ = 0° 52' 46" (RT)
D = 57° 17' 45"	D = 19° 05' 55"	D = 19° 05' 55"	D = 2° 51' 53"
R = 100.00'	R = 300.00'	R = 300.00'	R = 2,000.00'
T = 99.72'	T = 13.25'	T = 16.26'	T = 15.35'
L = 156.80'	L = 26.49'	L = 32.48'	L = 30.70'
E = 41.23'	E = 0.29'	E = 0.44'	E = 0.06'
P.C. STA. = 478+93.96	P.C. STA. = 485+69.77	P.C. STA. = 485+96.26	P.C. STA. = 489+51.66
P.T. STA. = 480+50.76	P.T. STA. = 485+96.26	P.T. STA. = 486+28.75	P.T. STA. = 489+82.36

0 50 100 FEET
HORIZONTAL SCALE
0 2 4 5 10 FEET
VERTICAL SCALE

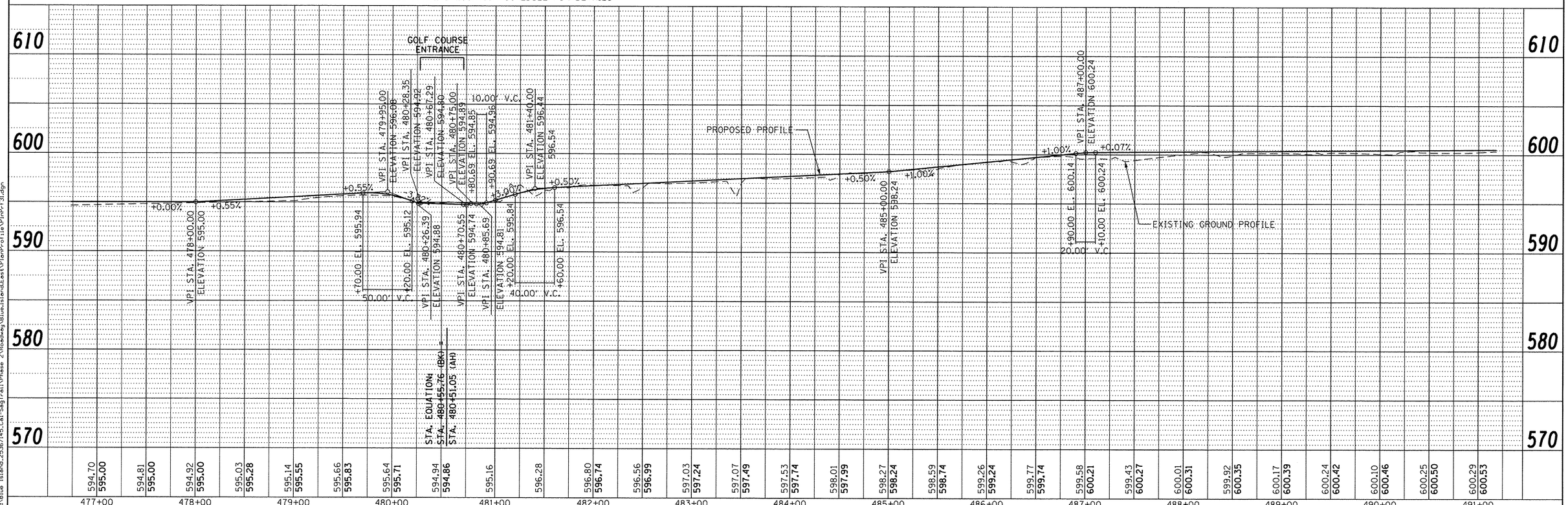

PLAN	BY	DATE
SURVEYED		
PLOTTED		
ALIGNMENT CHECKED		
RECORD DRAWING AS-BUILT		
CADD FILE NAME		
NOTE BOOK NO.		

PROFILE	BY	DATE
SURVEYED		
PLOTTED		
GRADES CHECKED		
B.M. NOTED		
STRUCTURE NOTATNS CHKD		
NOTE BOOK NO.		

FILE NAME P:\Blue Island_25367145_Cal-SagTrail\Phase 2\Roadway\BlueIslandEast\PlanProfile\PlnPrf31.dgn

AECOM
303 East Wacker Drive, Suite 1400, Chicago, IL 60601
T 1-312-373-7700 F 1-312-373-6800

USER NAME = ken_moy	DESIGNED - KLM	REVISED -
	DRAWN - KLM	REVISED -
PLOT SCALE = 50.0000 ' / in.	CHECKED - BMC	REVISED -
PLOT DATE = 8/4/2016	DATE - AUGUST 5, 2016	REVISED -

STATE OF ILLINOIS
DEPARTMENT OF TRANSPORTATION

CAL-SAG GREENWAY TRAIL (BLUE ISLAND EAST SEGMENT)
PLAN AND PROFILE

SCALE: | SHEET NO. 5 OF 6 SHEETS | STA. | TO STA.

SECTION	COUNTY	TOTAL SHEETS	SHEET NO.
08-00178-02-BT	COOK	64	14

FED. ROAD DIST. NO. | ILLINOIS | FED. AID PROJECT

CONTRACT NO. 61C12

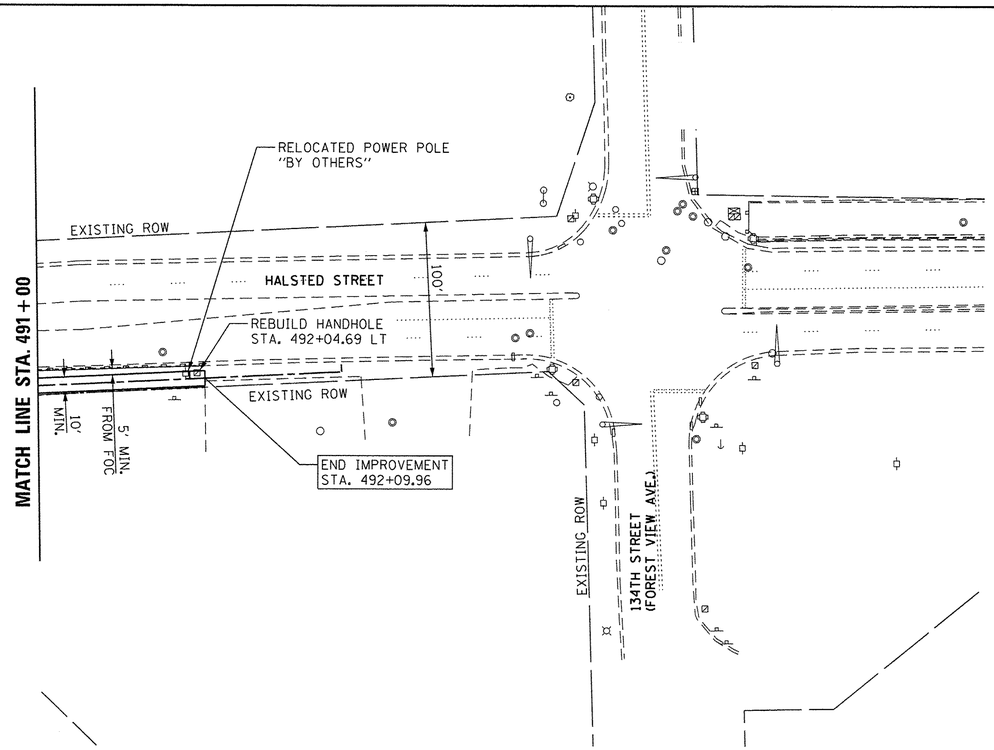

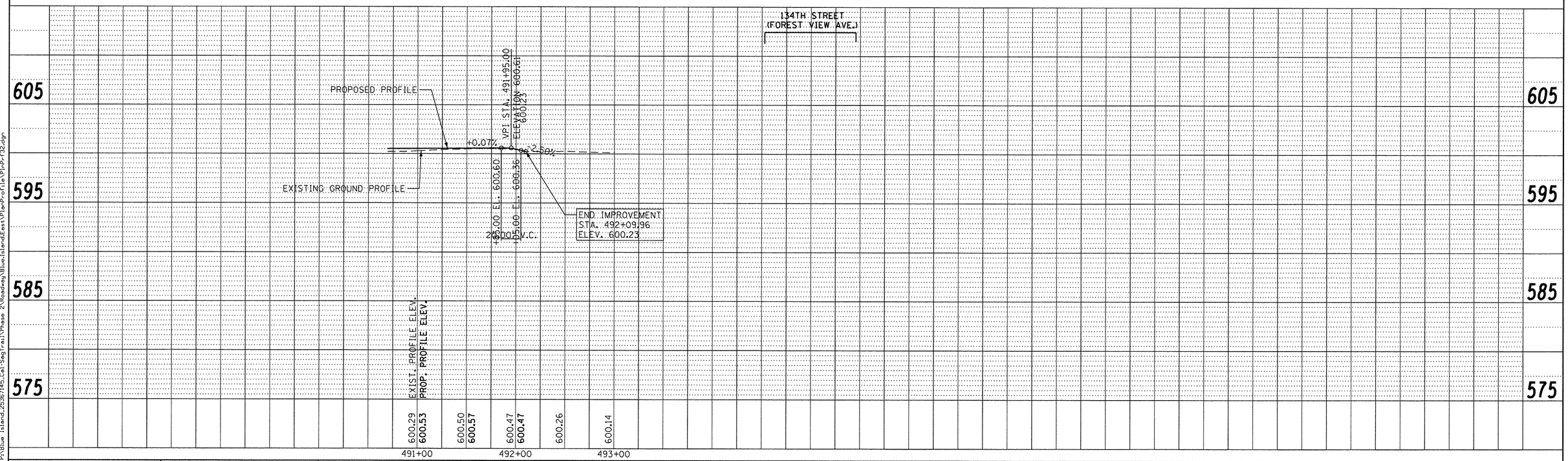

N

0 50 100 FEET
HORIZONTAL SCALE

0 2 4 5 10 FEET
VERTICAL SCALE

PLAN	BY	DATE
SURVEYED		
PLOTTED		
ALIGNMENT CHECKED		
RT. OF WAY CHECKED		
CADD FILE NAME		
NOTE BOOK NO.		

PROFILE	BY	DATE
SURVEYED		
PLOTTED		
GRADES CHECKED		
B.M. NOTED		
STRUCTURE NOTATNS CHKD		
NOTE BOOK NO.		

FILE NAME P:\Blue Island_25367145_Cal-Sag Trail\Phase 2\Roadway\Blue_IslandEast\PlanProfile\PrPr132.dgn

AECOM
303 East Wacker Drive, Suite 1400, Chicago, IL 60601
T 1-312-373-7700 F 1-312-373-6800

USER NAME = ken_may	DESIGNED - KLM	REVISED -	
	DRAWN - KLM	REVISED -	
PLOT SCALE = 50.0000 ' / in.	CHECKED - BMC	REVISED -	
PLOT DATE = 8/4/2016	DATE - AUGUST 5, 2016	REVISED -	

STATE OF ILLINOIS
DEPARTMENT OF TRANSPORTATION

CAL-SAG GREENWAY TRAIL (BLUE ISLAND EAST SEGMENT)
PLAN AND PROFILE

SCALE: | SHEET NO. 6 OF 6 SHEETS | STA. 491+00 TO STA. 492+09.96

SECTION	COUNTY	TOTAL SHEETS	SHEET NO.
08-00178-02-BT	COOK	64	15

FED. ROAD DIST. NO. | ILLINOIS | FED. AID PROJECT

CONTRACT NO. 61C12

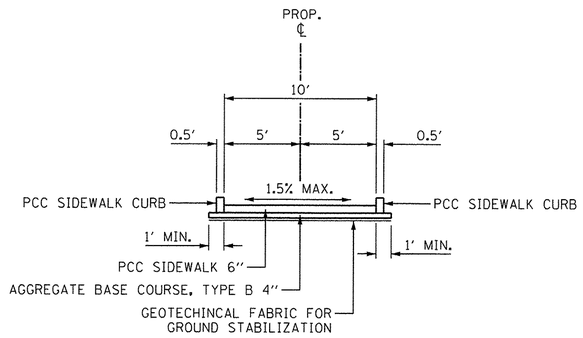

PROPOSED TYPICAL SECTION
PCC SIDEWALK 6"

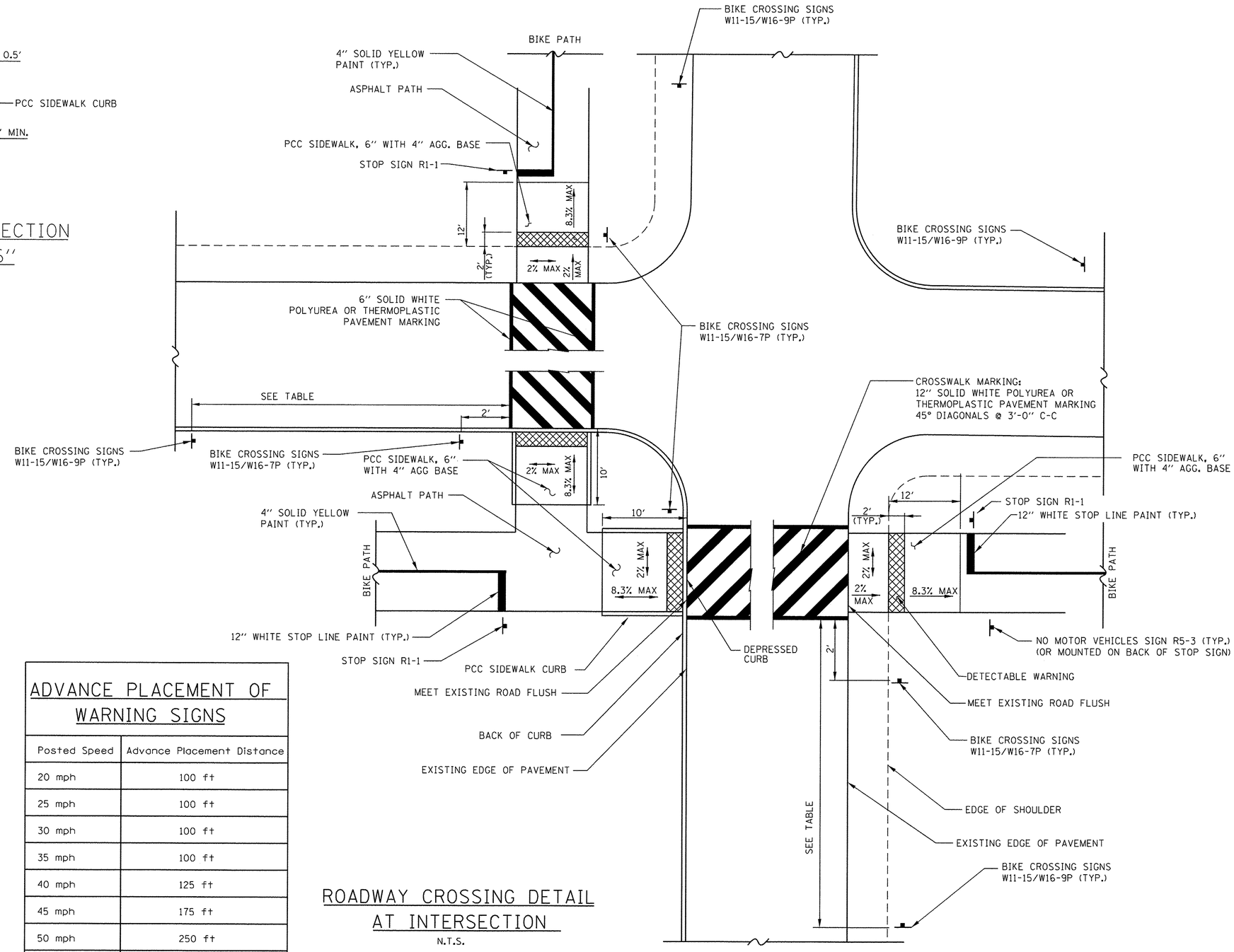

ADVANCE PLACEMENT OF WARNING SIGNS

Posted Speed	Advance Placement Distance
20 mph	100 ft
25 mph	100 ft
30 mph	100 ft
35 mph	100 ft
40 mph	125 ft
45 mph	175 ft
50 mph	250 ft
55 mph	325 ft

ROADWAY CROSSING DETAIL AT INTERSECTION

N.T.S.

FILE NAME = P:\Blue Island_25367145_Cal-SagTrail\Phase 2\Roadway\BlueIslandEast\Details\Details 01_Sidewalk Details.dgn

AECOM
303 East Wacker Drive, Suite 1400, Chicago, IL 60601
T 1-312-373-7700 F 1-312-373-6800

USER NAME = ken_moy	DESIGNED - KLM	REVISED -	
	DRAWN - KLM	REVISED -	
PLOT SCALE = 10.0000 ' / in.	CHECKED - BMC	REVISED -	
PLOT DATE = 8/4/2016 9:42:13 AM	DATE - AUGUST 5, 2016	REVISED -	

STATE OF ILLINOIS
DEPARTMENT OF TRANSPORTATION

CAL-SAG GREENWAY TRAIL (BLUE ISLAND EAST SEGMENT)
INTERSECTION APPROACH DETAILS

SHEET NO. OF SHEETS STA. TO STA.

SECTION	COUNTY	TOTAL SHEETS	SHEET NO.
08-00178-02-BT	COOK	64	16

CONTRACT NO. 61C12

FED. ROAD DIST. NO. 1 | ILLINOIS | FED. AID PROJECT

EOP = EDGE OF PAVEMENT
BODC = BACK OF DEPRESSED CURB
BOSW = BACK OF SIDEWALK

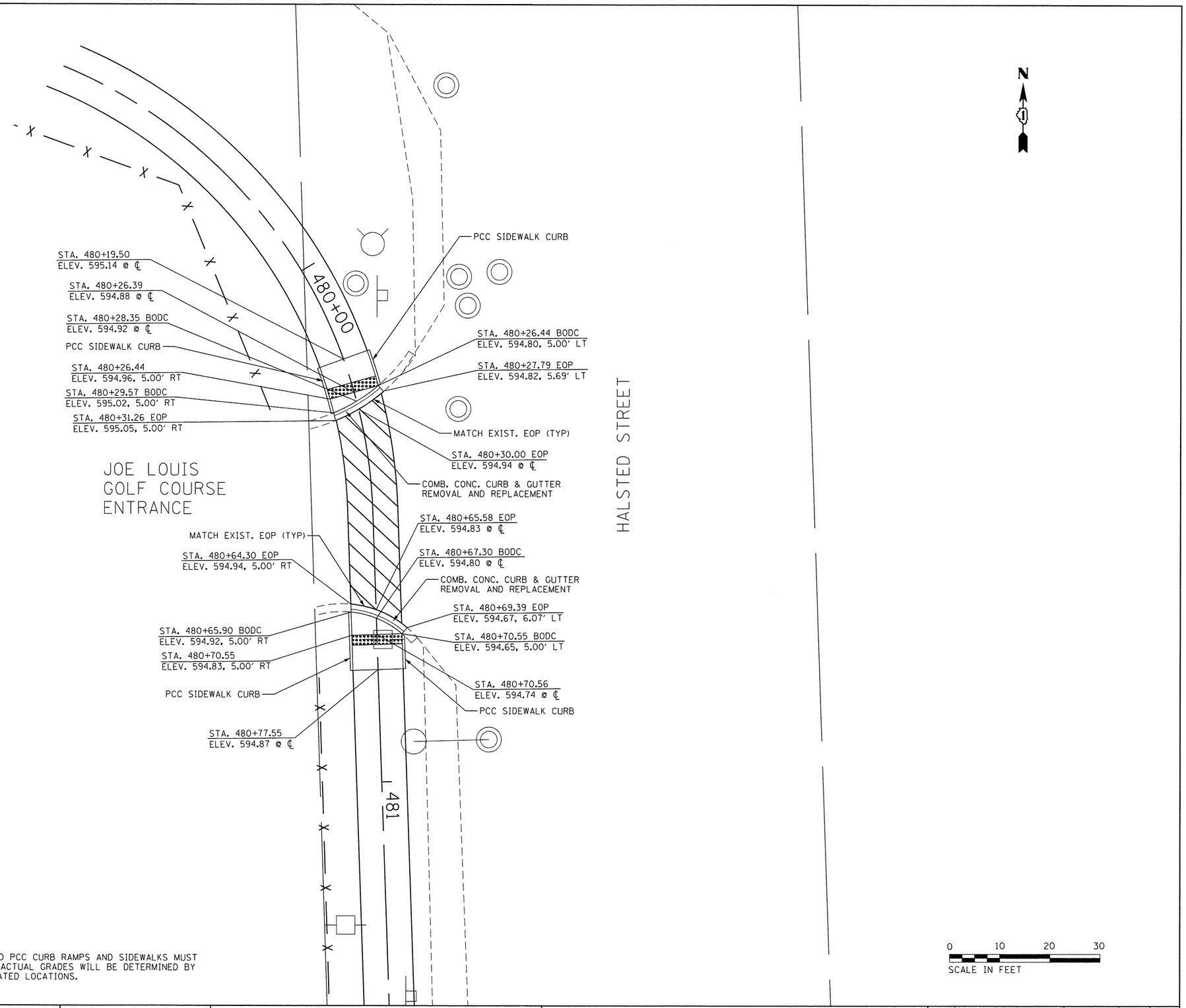

NOTE:

GRADES AND SLOPES FOR PROPOSED PCC CURB RAMPS AND SIDEWALKS MUST COMPLY WITH ADA REQUIREMENTS. ACTUAL GRADES WILL BE DETERMINED BY FIELD CONDITIONS AT THE DESIGNATED LOCATIONS.

FILE NAME = P:\Blue Island.2536745.Cal-SagTrail\Phase 2\Roadway\BlueIslandEast\Details\Details 02.Sidewalk Details.dgn

AECOM
303 East Wacker Drive, Suite 1400, Chicago, IL 60601
T 1-312-373-7700 F 1-312-373-6800

USER NAME = ken_moy	DESIGNED - KLM	REVISED -	
	DRAWN - KLM	REVISED -	
PLOT SCALE = 10.0000 ' / in.	CHECKED - BMC	REVISED -	
PLOT DATE = 8/4/2016 9:42:15 AM	DATE - AUGUST 5, 2016	REVISED -	

STATE OF ILLINOIS
DEPARTMENT OF TRANSPORTATION

CAL-SAG GREENWAY TRAIL (BLUE ISLAND EAST SEGMENT)
DETAILS

SHEET NO. OF SHEETS STA. TO STA.

SECTION	COUNTY	TOTAL SHEETS	SHEET NO.
08-00178-02-BT	COOK	64	17
	CONTRACT NO. 61C12		

FED. ROAD DIST. NO. 1 | ILLINOIS | FED. AID PROJECT

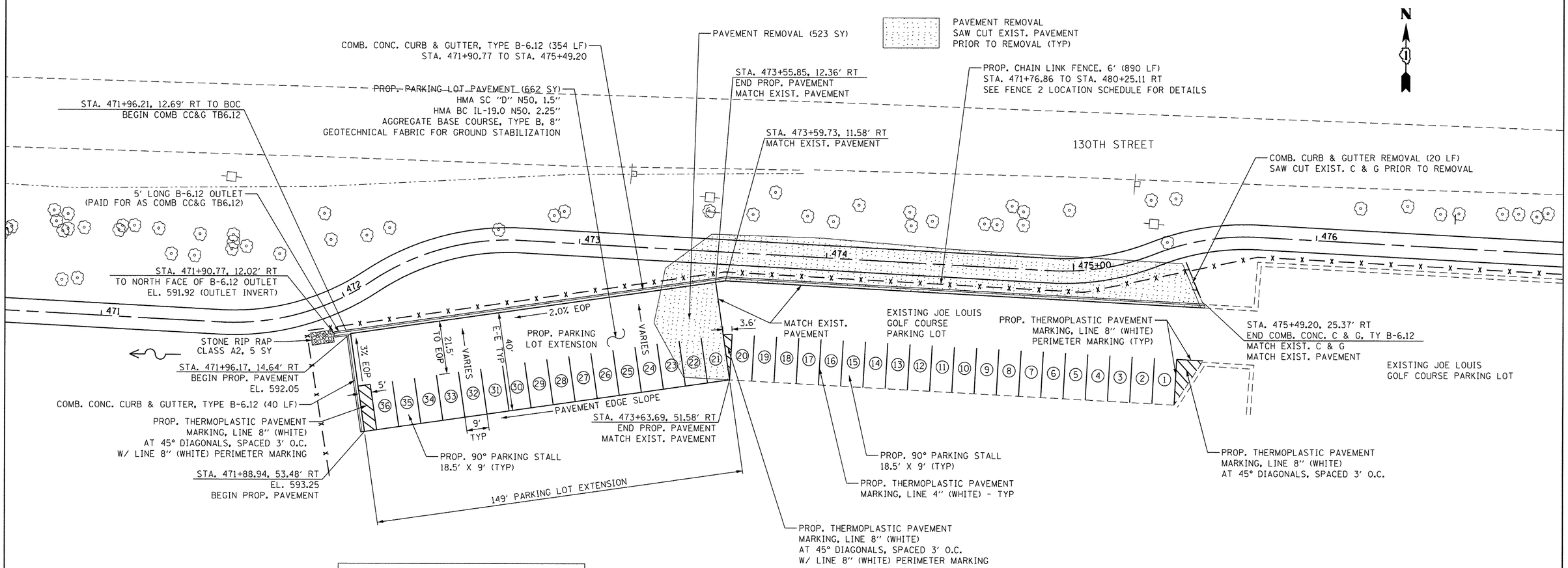

NOTE:

GRADING FROM EDGES OF PROPOSED PARKING LOT PAVEMENT SHALL NOT EXCEED A 3:1 SLOPE

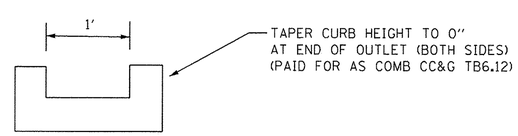

B-6.12 OUTLET DETAIL

0 20 40 60
SCALE IN FEET

FILE NAME = P:\Blue Island_25367145_Cal-SagTrail\Phase 2\Roadway\Blue.IslandEast\Details\Details 04_ParkingLot Details.dgn

AECOM 303 East Wacker Drive, Suite 1400, Chicago, IL 60601 T 1-312-373-7700 F 1-312-373-6800	USER NAME = ken_moy	DESIGNED - KLM	REVISED -	STATE OF ILLINOIS DEPARTMENT OF TRANSPORTATION	CAL-SAG GREENWAY TRAIL (BLUE ISLAND EAST SEGMENT) PROPOSED PARKING LOT DETAIL	SECTION	COUNTY	TOTAL SHEETS	SHEET NO.
		DRAWN - KLM	REVISED -			08-00178-02-BT	COOK	64	18
	PLOT SCALE = 20.0000 ' / in.	CHECKED - BMC	REVISED -				CONTRACT NO. 61C12		
	PLOT DATE = 8/4/2016 9:42:16 AM	DATE - AUGUST 5, 2016	REVISED -		SHEET NO. OF SHEETS STA. TO STA.	FED. ROAD DIST. NO. 1	ILLINOIS	FED. AID PROJECT	

INSTALL CAST ALUMINUM MEDALLIONS ON 2 SIDES OF PIER
INSTALL AGENCY NAME PLATES ON 2 SIDES OF PIER
FORM LINER WILL BE RECESSED WITH 2" REVEAL AT PANEL PERIMETER

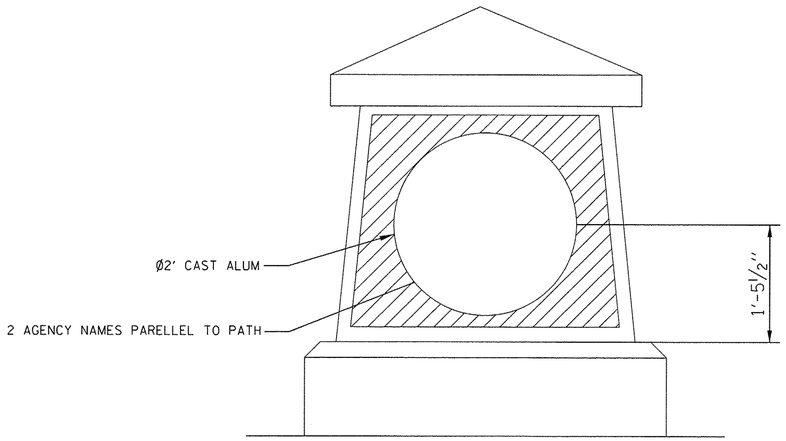

GATEWAY MONUMENT MEDALLION SIGN

FORM LINER SELECTION IS "LIMESTONE"

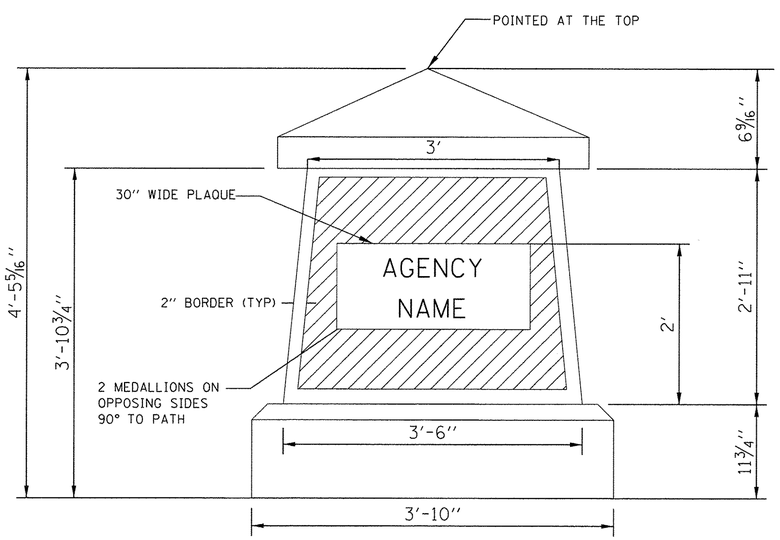

GATEWAY MONUMENT AGENCY NAME SIGN

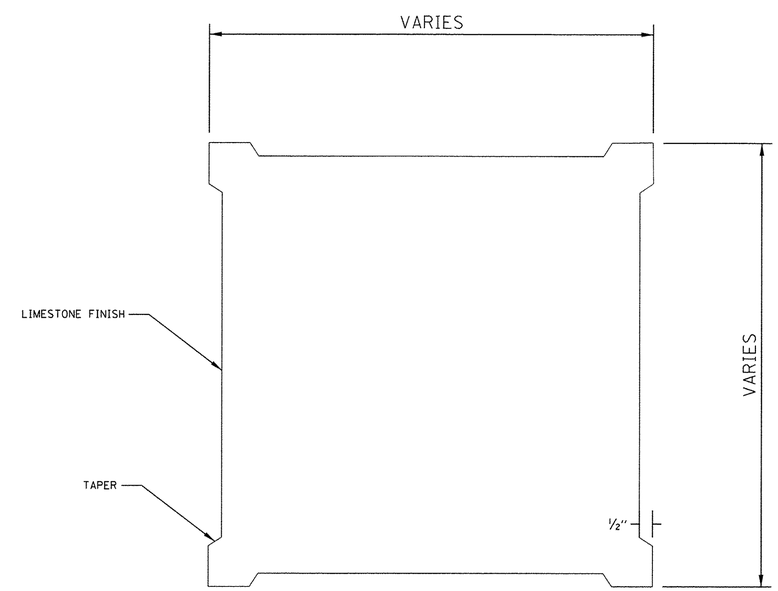

SECTION A
TYP. OF UPPER & LOWER AREAS

FILE NAME = P:\Blue Island_25367145_Cal-SagTrail\Phase 2\Roadway\BlueIslandEast\Details\Details 05 Gateway Monument.dgn

AECOM
303 East Wacker Drive, Suite 1400, Chicago, IL 60601
T 1-312-373-7700 F 1-312-373-6800

USER NAME = ken_moy	DESIGNED - KLM	REVISED -	
	DRAWN - KLM	REVISED -	
PLOT SCALE = 10.0000 ' / in.	CHECKED - BMC	REVISED -	
PLOT DATE = 8/4/2016 9:42:18 AM	DATE - AUGUST 5, 2016	REVISED -	

STATE OF ILLINOIS
DEPARTMENT OF TRANSPORTATION

CAL-SAG GREENWAY TRAIL (BLUE ISLAND EAST SEGMENT)
GATEWAY MONUMENT SIGN DETAILS

SHEET NO. OF SHEETS | STA. TO STA.

SECTION	COUNTY	TOTAL SHEETS	SHEET NO.
08-00178-02-BT	COOK	64	19
	CONTRACT NO. 61C12		

FED. ROAD DIST. NO. 1 | ILLINOIS | FED. AID PROJECT

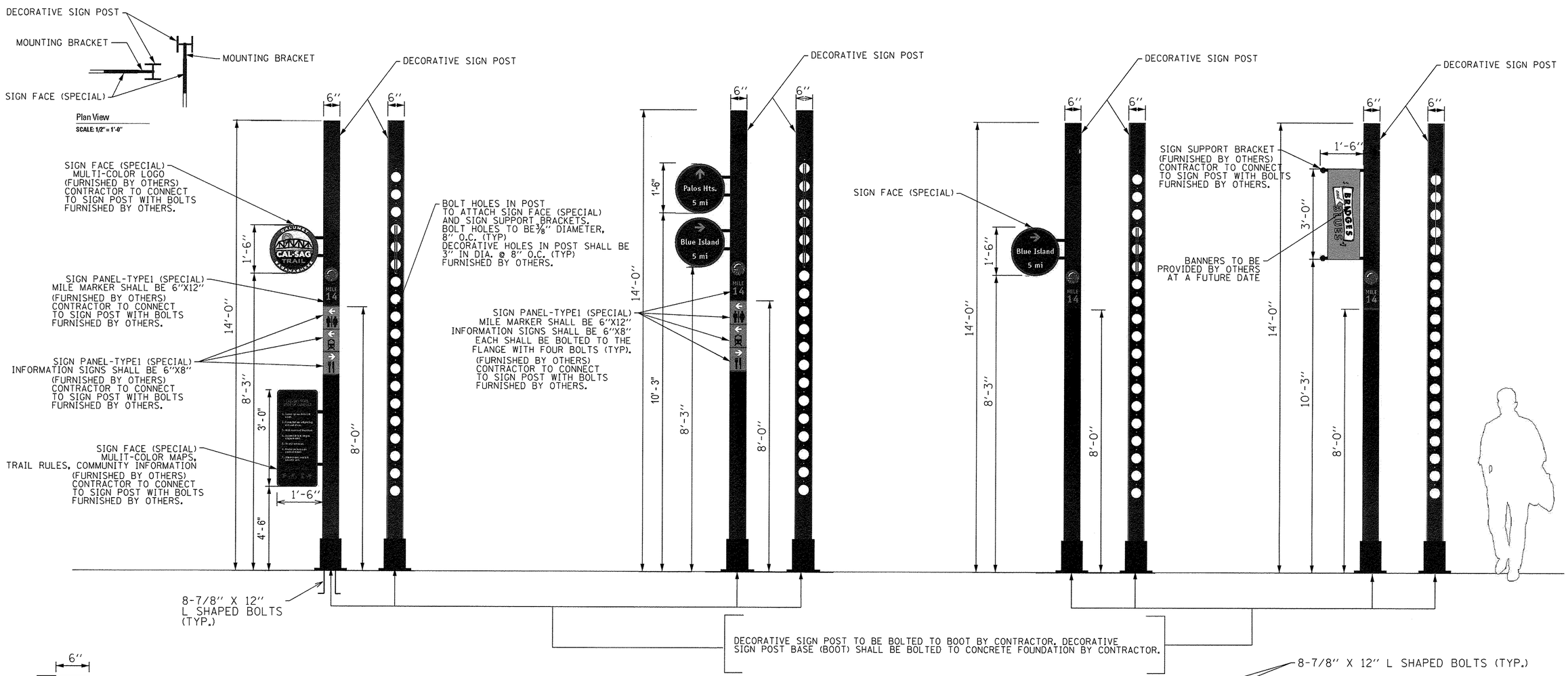

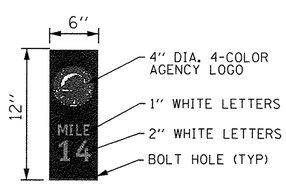

MILE MARKER
SIGN PANEL- TYPE 1
NOT TO SCALE

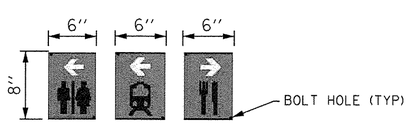

4-COLOR INFORMATION
SIGN PANEL- TYPE 1
NOT TO SCALE

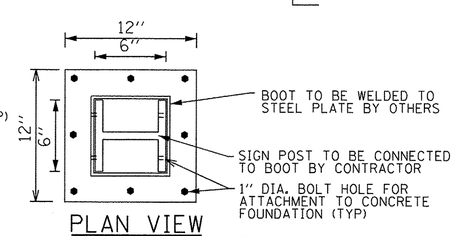

PLAN VIEW
BASE PLATE DETAIL
NOT TO SCALE

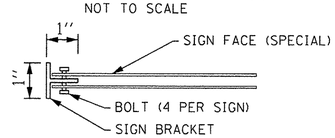

PLAN VIEW
MOUNTING BRACKET DETAIL
NOT TO SCALE

NOTE:

DECORATIVE SIGN POSTS AND ALL ASSOCIATED AND APPLICABLE SIGN PANEL-LOGOS, SIGN PANELS, SIGN SUPPORT BRACKETS, MOUNTING BRACKETS, AND BASE PLATES ARE FURNISHED BY OTHERS FOR THIS CONTRACT.

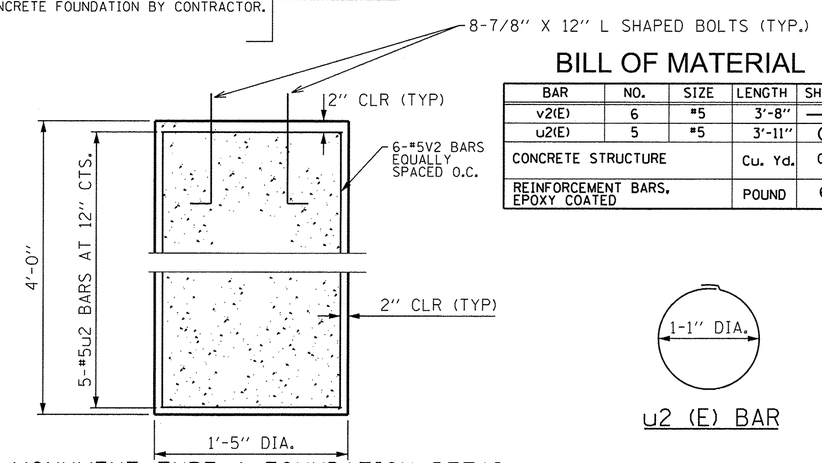

MONUMENT TYPE A FOUNDATION DETAIL
FOR DECORATIVE SIGN AND POST (DIRECT POST)
NOT TO SCALE

BILL OF MATERIAL

BAR	NO.	SIZE	LENGTH	SHAPE
v2(E)	6	#5	3'-8"	—
u2(E)	5	#5	3'-11"	○
CONCRETE STRUCTURE			Cu. Yd.	0.2
REINFORCEMENT BARS, EPOXY COATED			POUND	60

u2 (E) BAR

FILE NAME = P:\Blue Island.25367145.Cal-SagTrail\Phase 2\Roadway\BlueIslandEast\Details\Details 06.SignPosts.dgn

AECOM
303 East Wacker Drive, Suite 1400, Chicago, IL 60601
T 1-312-373-7700 F 1-312-373-6800

USER NAME = ken_moy	DESIGNED - KLM	REVISED -	
	DRAWN - KLM	REVISED -	
PLOT SCALE = 2.0000 ' / in.	CHECKED - BMC	REVISED -	
PLOT DATE = 8/4/2016 9:44:14 AM	DATE - AUGUST 5, 2016	REVISED -	

STATE OF ILLINOIS
DEPARTMENT OF TRANSPORTATION

CAL-SAG GREENWAY TRAIL (BLUE ISLAND EAST SEGMENT)
DECORATIVE SIGN AND POST ASSEMBLY DETAILS

SHEET NO. OF SHEETS STA. TO STA.

SECTION	COUNTY	TOTAL SHEETS	SHEET NO.
08-00178-02-BT	COOK	64	20
	CONTRACT NO. 61C12		

FED. ROAD DIST. NO. 1 ILLINOIS FED. AID PROJECT

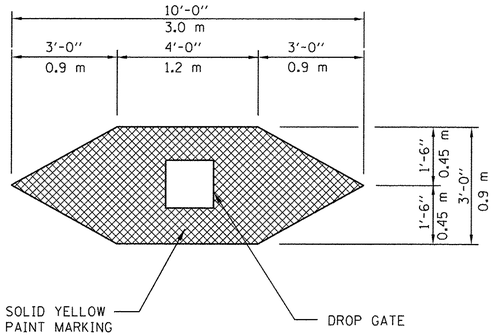

DROP GATE MARKING DETAIL

N.T.S.

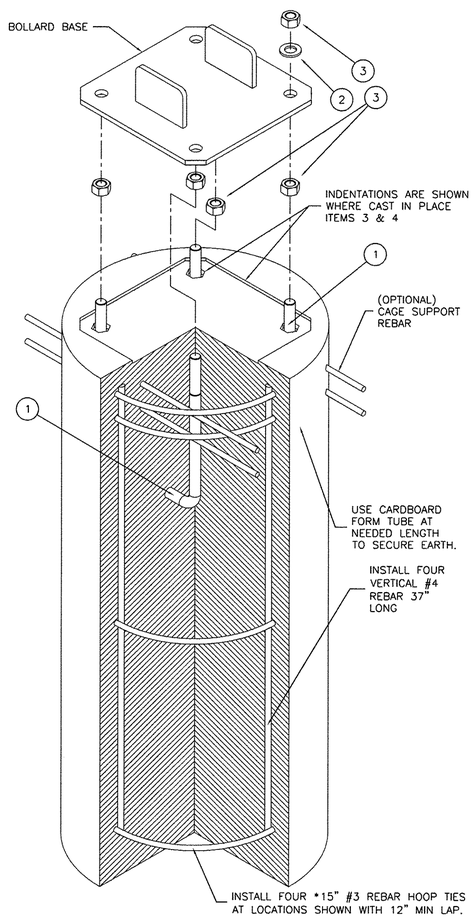

CONCRETE PIER ANCHOR SYSTEM (CPAS)

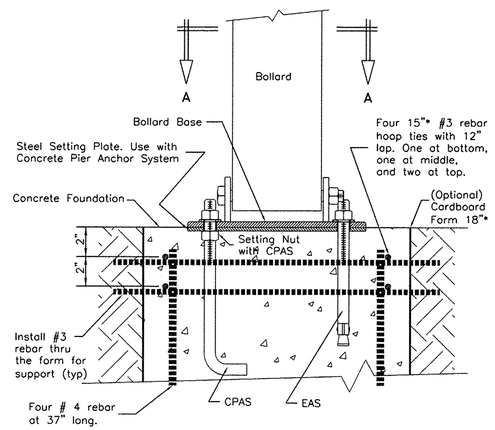

FRONT ELEVATION SECTION

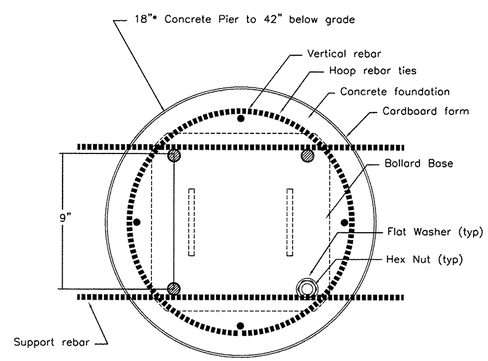

PLAN SECTION "A-A"

DROP GATE, INSTALLATION DETAIL

N.T.S.

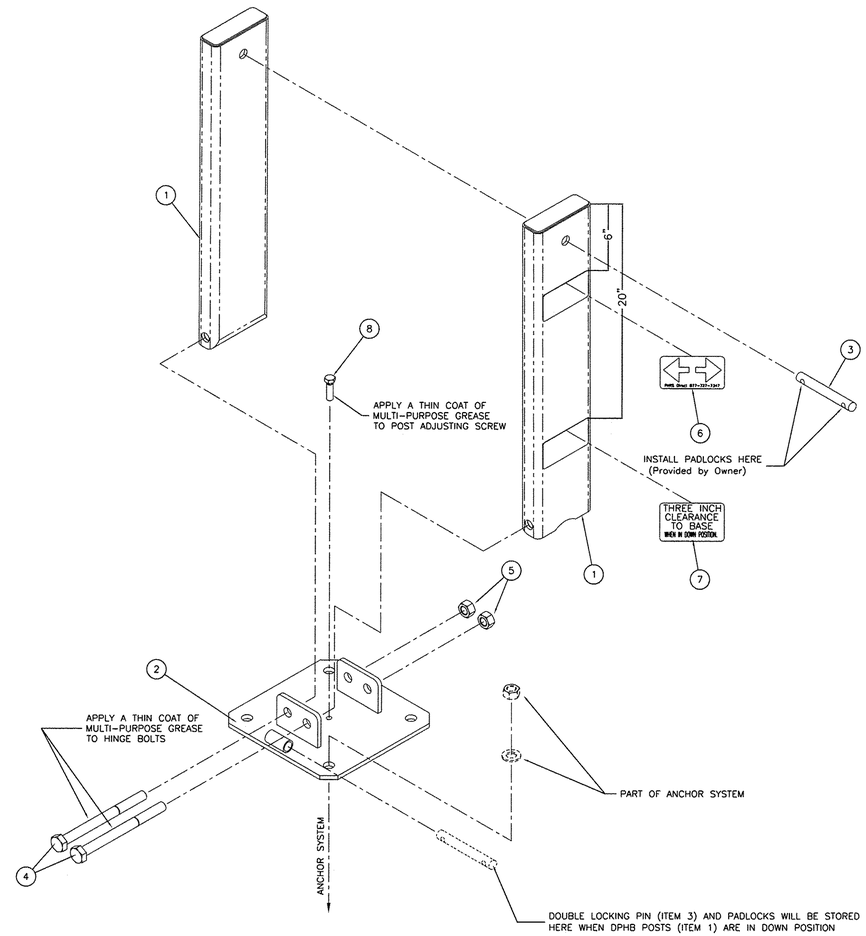

DROP GATE DETAIL

FILE NAME = P:\Blue Island_25367145_Cal-Sag Trail\Phase 2\Roadway\BlueIslandEast\Details\Details 07_DropGate.dgn

AECOM
303 East Wacker Drive, Suite 1400, Chicago, IL 60601
T 1-312-373-7700 F 1-312-373-6800

USER NAME = ken_moy	DESIGNED - KLM	REVISED -	
	DRAWN - KLM	REVISED -	
PLOT SCALE = 10.0000 ' / in.	CHECKED - BMC	REVISED -	
PLOT DATE = 8/4/2016 9:42:32 AM	DATE - AUGUST 5, 2016	REVISED -	

STATE OF ILLINOIS
DEPARTMENT OF TRANSPORTATION

CAL-SAG GREENWAY TRAIL (BLUE ISLAND EAST SEGMENT)
MISCELLANEOUS DETAILS

SHEET NO. 2 OF 4 SHEETS | STA. | TO STA.

SECTION	COUNTY	TOTAL SHEETS	SHEET NO.
08-00178-02-BT	COOK	64	21
	CONTRACT NO. 61C12		

FED. ROAD DIST. NO. 1 | ILLINOIS | FED. AID PROJECT

GENERAL NOTES:

1. THE NATIONAL ARBORIST ASSOCIATION'S PRUNING STANDARDS FOR SHADE TREES CLASS II - STANDARD PRUNING SPECIFICATIONS SHALL BE FOLLOWED.

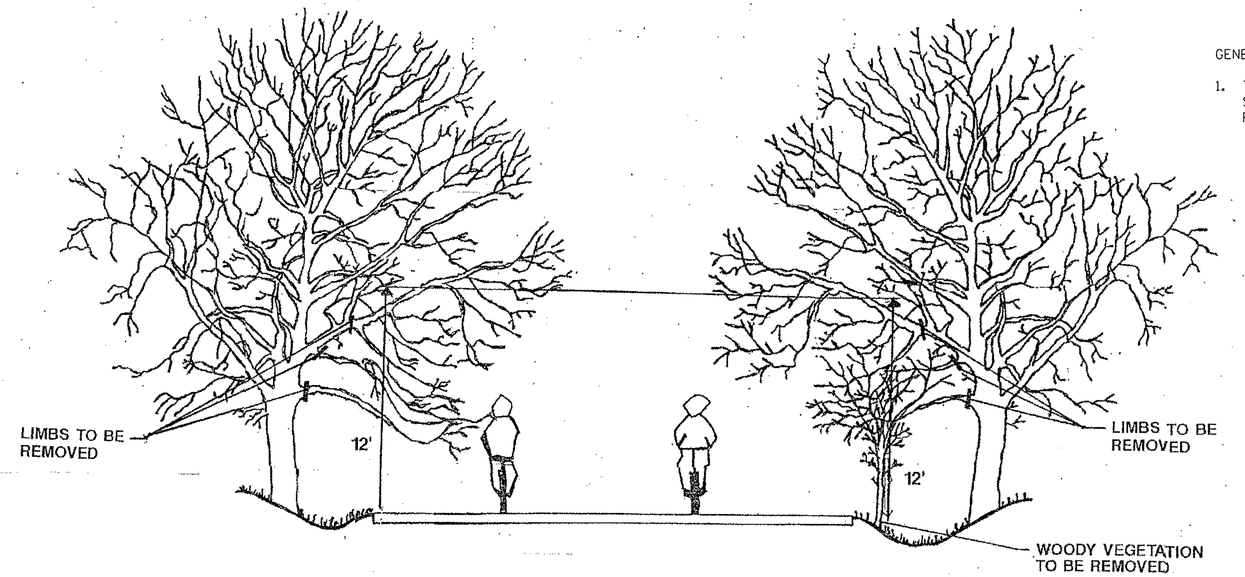

PRUNING FOR SAFETY AND EQUIPMENT

N.T.S.

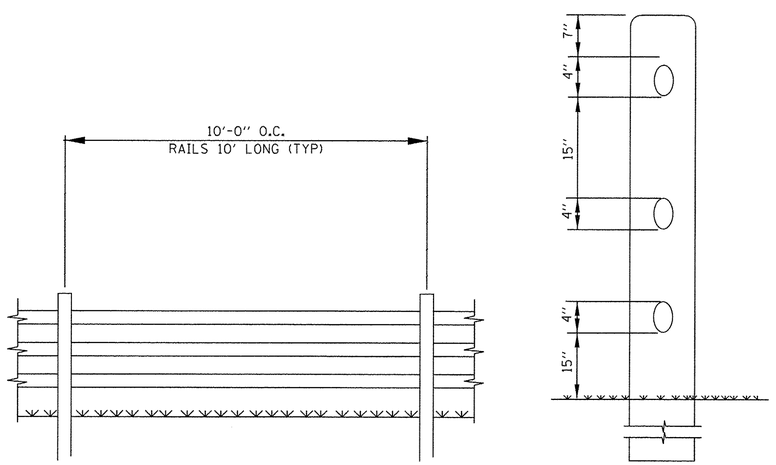

RUSTIC RAIL FENCE DETAIL

N.T.S.

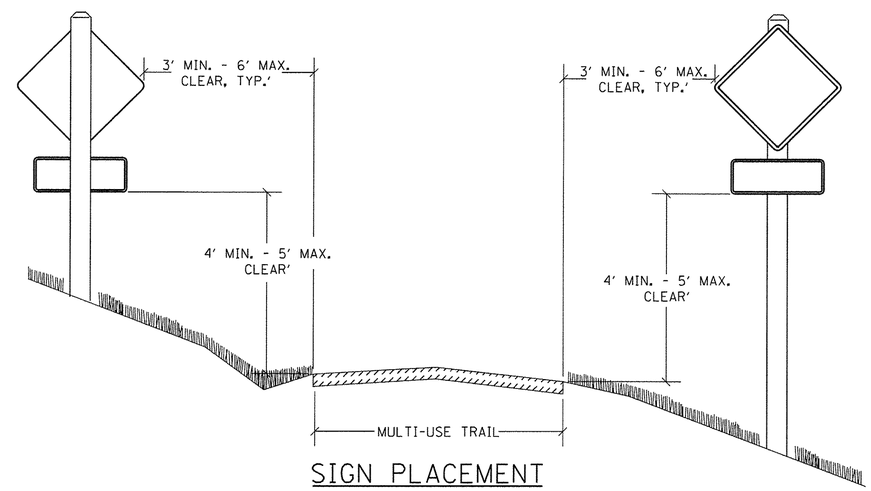

SIGN PLACEMENT

N.T.S.

FILE NAME = P:\Blue Island.25387145.Cal-SagTrail\Phase 2\Roadway\BlueIslandEast\Details\Details 08.Miscellaneous.dgn

AECOM
303 East Wacker Drive, Suite 1400, Chicago, IL 60601
T 1-312-373-7700 F 1-312-373-6800

USER NAME = ken_moy	DESIGNED - KLM	REVISED -	
	DRAWN - KLM	REVISED -	
PLOT SCALE = 10.0000 ' / in.	CHECKED - BMC	REVISED -	
PLOT DATE = 8/4/2016 9:42:34 AM	DATE - AUGUST 5, 2016	REVISED -	

STATE OF ILLINOIS
DEPARTMENT OF TRANSPORTATION

CAL-SAG GREENWAY TRAIL (BLUE ISLAND EAST SEGMENT)
MISCELLANEOUS DETAILS

SHEET NO. OF SHEETS | STA. TO STA.

SECTION	COUNTY	TOTAL SHEETS	SHEET NO.
08-00178-02-BT	COOK	64	22
	CONTRACT NO. 61C12		

FED. ROAD DIST. NO. 1 | ILLINOIS | FED. AID PROJECT

SCOPE OF WORK

1. FURNISH AND INSTALL NEW WATERWAY OBSTRUCTION WARNING LUMINAIRES THAT MEET UNITED STATES COAST GUARD (USCG) REQUIREMENTS INCLUDING ALL ASSOCIATED HARDWARE, ACCESSORIES AND EQUIPMENT.
2. FURNISH AND INSTALL NEW NAVIGATION OBSTRUCTION LIGHTING CONTROLLER AND ELECTRICAL SERVICE TO POWER THE LIGHTING SYSTEM.
3. COORDINATE ALL WORK WITH THE STRUCTURAL PLANS AND OTHER TRADES.
4. COORDINATE THE NEW ELECTRIC SERVICE WITH THE ELECTRIC UTILITY COMPANY AS SOON AS POSSIBLE IN ORDER TO AVOID DELAYS.

FIXTURE SCHEDULE

TYPE	MANUFACTURER	DESCRIPTION	VOLTS	WATTS	REMARKS	MOUNTING
A	B&B ROADWAY OR APPROVED EQUAL	GREEN CENTER CHANNEL TYPE CC LED STYLE	120	20	NAVIGATION LIGHT	STRUCTURE
B	B&B ROADWAY OR APPROVED EQUAL	RED CHANNEL MARGIN LIGHT TYPE CM, LED STYLE	120	20	NAVIGATION LIGHT	STRUCTURE

GENERAL NOTES

1. ELECTRICAL CONTRACTOR SHALL FAMILIARIZE HIMSELF WITH THE EXISTING CONDITIONS PRIOR TO BIDDING AND COVER IN HIS BID ALL WORK TO BE PERFORMED.
2. ALL WORK SHALL BE PERFORMED IN STRICT ACCORDANCE WITH THE LATEST CODES, RULES AND ORDINANCES OF NEC AND FIRE PROTECTION CODES. COST OF PERMITS FOR CITY SHALL BE INCLUDED IN COST.
3. ELECTRICAL DEVICES AND EQUIPMENT ARE SHOWN SYMBOLICALLY ON THE PLANS. THE USE OF SYMBOLS AND NOTATIONS (OR THE OMISSION THEREOF) DOES NOT RELIEVE THE CONTRACTOR FROM FURNISHING A SAFE, COMPLETE AND FULLY FUNCTIONAL SYSTEM. FIELD LOCATE DEVICES AND EQUIPMENT TO FACILITATE ACCESSIBILITY WITH RESPECT TO OPERATIONS AND MAINTENANCE CONDITIONS.
4. COORDINATE ELECTRICAL WORK WITH GENERAL CONTRACTOR, OTHER TRADES AND EXISTING CONDITIONS TO AVOID CONFLICTS AND DELAYS.
5. ALL MOUNTING HARDWARE SHALL BE 300 SERIES STAINLESS STEEL. ALL EXTERIOR BOXES SHALL BE NEMA 4X RATED STAINLESS STEEL.
6. PRIOR TO ENERGIZING THE ELECTRICAL SYSTEM, TEST THE ENTIRE INSTALLATION FOR GROUNDS, SHORTS OR IMPROPER CONNECTIONS UTILIZING MEGGER TESTER.
7. ALL CONDUIT ROUTING SHOWN IS DIAGRAMMATIC AND IS SHOWN ONLY FOR GENERAL GUIDANCE FOR THE CONTRACTOR IN SUBMITTING BIDS.
8. MINIMUM CONDUIT SIZE IS 1".
9. CONDUIT AND CABLE FOR ELECTRIC SERVICE TO THE NAVIGATION LIGHTING CONTROL CABINET IS PAID FOR UNDER INDIVIDUAL PAY ITEMS. THE QUANTITIES SHOWN FOR THE SERVICE CABLE AND CONDUIT IN THE QUANTITY AND PAY ITEMS TABLE ON THIS SHEET ARE ESTIMATED. COORDINATE THE NEW ELECTRIC SERVICE WITH THE ELECTRIC UTILITY AS SOON AS THE CONTRACT IS AWARDED IN ORDER TO AVOID DELAYS IN PROVIDING A NEW ELECTRIC FEED TO THE NEW BRIDGE.
10. ALL NEW CONDUITS, FITTINGS AND HARDWARE INSTALLED IN EXPOSED OUTDOOR AREAS TO BE PVC COATED RIGID GALVANIZED STEEL. ALL PULLBOXES AND JUNCTION BOXES IN OUTDOOR AREAS TO BE STAINLESS STEEL. NEMA TYPE 4X. GASKETED AND CORROSION RESISTANT.
11. CONTRACTOR TO PROVIDE SHOP DRAWING SUBMITTALS FOR REVIEW AND APPROVAL. INCLUDING BUT NOT LIMITED TO INSTALLATION DETAILS, CONDUIT LAYOUT AND METHOD OF ATTACHMENT, NAVIGATION LIGHTING DATA SHEETS, JUNCTION BOX MATERIAL AND STANDARD COMPLIANCE INFORMATION, AND LIGHTING CONTROLLER COMPONENTS, BILL OF MATERIALS, AND LAYOUT.
12. INSTALL A COMPLETE INTEGRATED GROUNDING AND BONDING SYSTEM FOR ALL NEW EQUIPMENT AND DEVICES PER NEC 250.

ELECTRICAL PAY ITEM TABLE

NAVIGATION LIGHTING ELECTRICAL QUANTITIES FOR LITTLE CALUMET PED BRIDGE

Item #	Description	Units	QTY
80400100	ELECTRIC SERVICE INSTALLATION	EACH	1
80400200	ELECTRIC UTILITY SERVICE CONNECTION	L SUM	1
81028720	UNDERGROUND CONDUIT, COILABLE NONMETALLIC CONDUIT, 1" DIA.	FOOT	120
81028200	UNDERGROUND CONDUIT, GALVANIZED STEEL, 2" DIA.	FOOT	500
81100320	CONDUIT ATTACHED TO STRUCTURE, 1" DIA., PVC COATED GALVANIZED STEEL	FOOT	520
81300220	JUNCTION BOX, STAINLESS STEEL, ATTACHED TO STRUCTURE, 6" X 6" X 4"	EACH	6
81300320	JUNCTION BOX, STAINLESS STEEL, ATTACHED TO STRUCTURE, 8" X 8" X 6"	EACH	2
81702110	ELECTRIC CABLE IN CONDUIT, 600V (XLP-TYPE USE) 1/C NO. 10	FOOT	726
81702120	ELECTRIC CABLE IN CONDUIT, 600V (XLP-TYPE USE) 1/C NO. 8	FOOT	2904
81702400	ELECTRIC CABLE IN CONDUIT, 600V (XLP-TYPE USE) 3-1/C NO. 2	FOOT	500
82200605	WATERWAY OBSTRUCTION WARNING LUMINAIRE, LED	EACH	6
82500330	LIGHTING CONTROLLER, PEDESTAL MOUNTED, 240VOLT, 60AMP	EACH	1

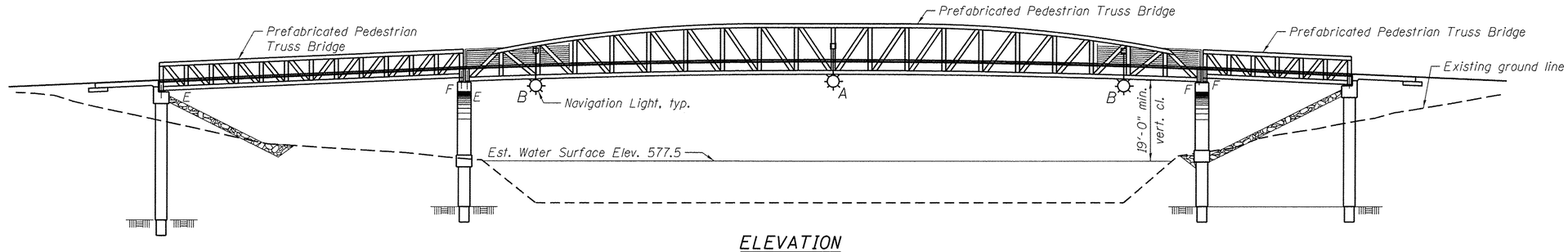

ELEVATION

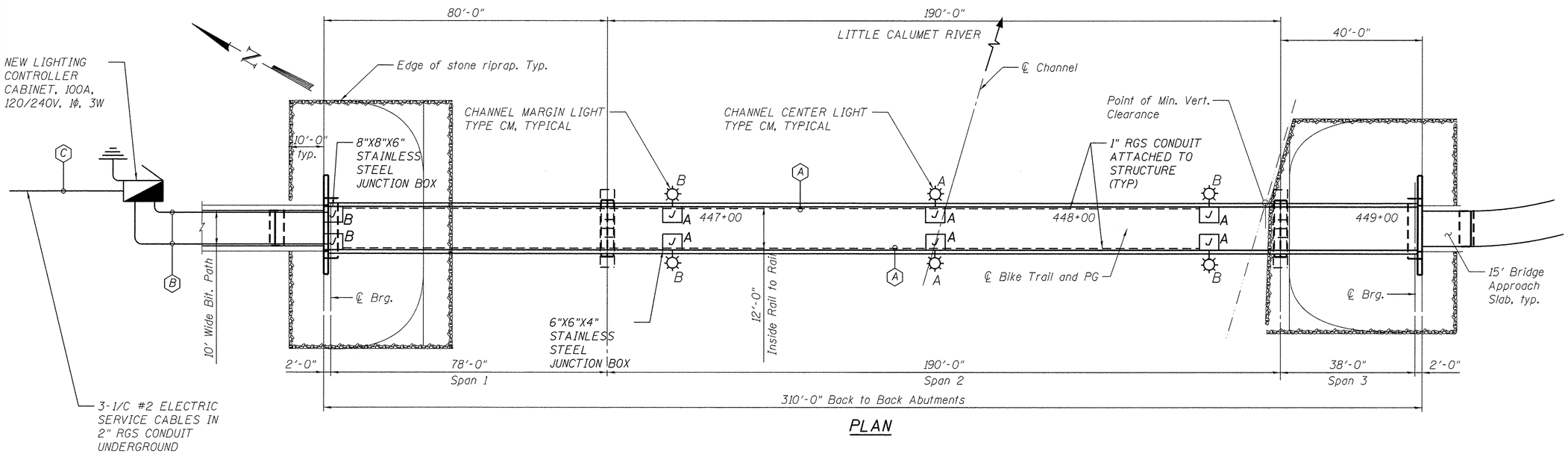

PLAN

NOTES

1. SEE BRIDGE PLANS FOR ADDITIONAL INFORMATION AND NAVIGATION LIGHT FIXTURES MOUNTING DETAILS.
2. INCLUDED IN WATERWAY OBSTRUCTION WARNING LUMINAIRE, LED PAY ITEM IS ALL LABOR, TOOLS, EQUIPMENT AND MATERIALS FROM JUNCION BOXES UP TO AND INCLUDING THE LIGHTS. JUNCTION BOXES, CONDUIT AND WIRE FROM CONTROLLER TO BOXES SHALL BE PAID FOR SEPARATELY.
3. ALL EXPOSED CONDUITS SHALL BE PVC COATED RIGID GALVINIZED STEEL. ALL BOLTS, NUTS, WASHERS, BRACKETS, HARDWARE AND FITTINGS SHALL BE SERIES 300 STAINLESS STEEL.
4. NAVIGATION LIGHTING CIRCUITS SHALL BE 120 VAC. WIRING SHALL BE AS SHOWN ON THE PLANS.
5. PROVIDE WIRING FOR TWO ELECTRICAL CIRCUITS (MINIMUM). EACH SIDE OF THE BRIDGE MUST BE ON A SEPARATE CIRCUIT AS SHOWN ON THE WIRING DIAGRAM.
6. NAVIGATION LIGHT FIXTURES SHALL BE LED STYLE AND MUST COMPLY WITH U.S. COAST GUARD (USCG) REGULATIONS. LOCATION OF FIXTURES SHALL BE COORDINATED WITH THE STRUCTURAL PLANS.
7. ALL WORK MUST CONFORM TO THE NATIONAL ELECTRIC CODE (NEC).
8. SOME ELEMENTS OR DETAILS MAY NOT SHOWN FOR CLARITY. COORDINATE COORDINATE ALL ELECTRICAL WORK WITH OTHER TRADES.

LEGEND

- J A — 6"X6"X4" JUNCTION BOX, NEMA 4X, STAINLESS STEEL ATTACHED TO STEEL STRUCTURE
- J B — 8"X8"X6" JUNCTION BOX, NEMA 4X, STAINLESS STEEL ATTACHED TO STEEL STRUCTURE
- A,B — NAVIGATION LIGHT FIXTURE LED, 120V
- LIGHTING CONTROL CABINET 100A, 120/240V, 1Φ, 3W

CABLE LEGEND

- ——— RIGID GALVANIZED STEEL CONDUIT INSTALLED UNDERGROUND
- - - - - RIGID GALVANIZED STEEL CONDUIT INSTALLED ATTACHED TO STRUCTURE
- (A) 1" PVC COATED RGS CONDUIT, ATTACHED 2-1/C #8 AWG, 1-1/C #10 AWG GND
- (B) 1" COILABLE NONMETALLIC CONDUIT, UNDERGROUND 2-1/C #8 AWG, 1-1/C #10 AWG GND
- (C) 2" RGS CONDUIT, UNDERGROUND 3-1/C #2 AWG, SERVICE CONDUCTORS FROM UTILITY TRANSFORMER

AECOM
303 East Wacker Drive, Suite 1400, Chicago, IL 60601
T 1-312-373-7700 F 1-312-373-6800

USER NAME =	DESIGNED - DAD	REVISED	
	CHECKED - MAE	REVISED	
PLOT SCALE =	DRAWN - MAE	REVISED	
PLOT DATE = 8/4/2016	CHECKED - DAD	REVISED	

STATE OF ILLINOIS
DEPARTMENT OF TRANSPORTATION

PROPOSED NAVIGATION LIGHTING PLAN

SHEET NO. E-2 OF E-4 SHEETS

SECTION	COUNTY	TOTAL SHEETS	SHEET NO.
08-00178-02-BT	COOK	64	24
CONTRACT NO. 61C12			
ILLINOIS FED. AID PROJECT			

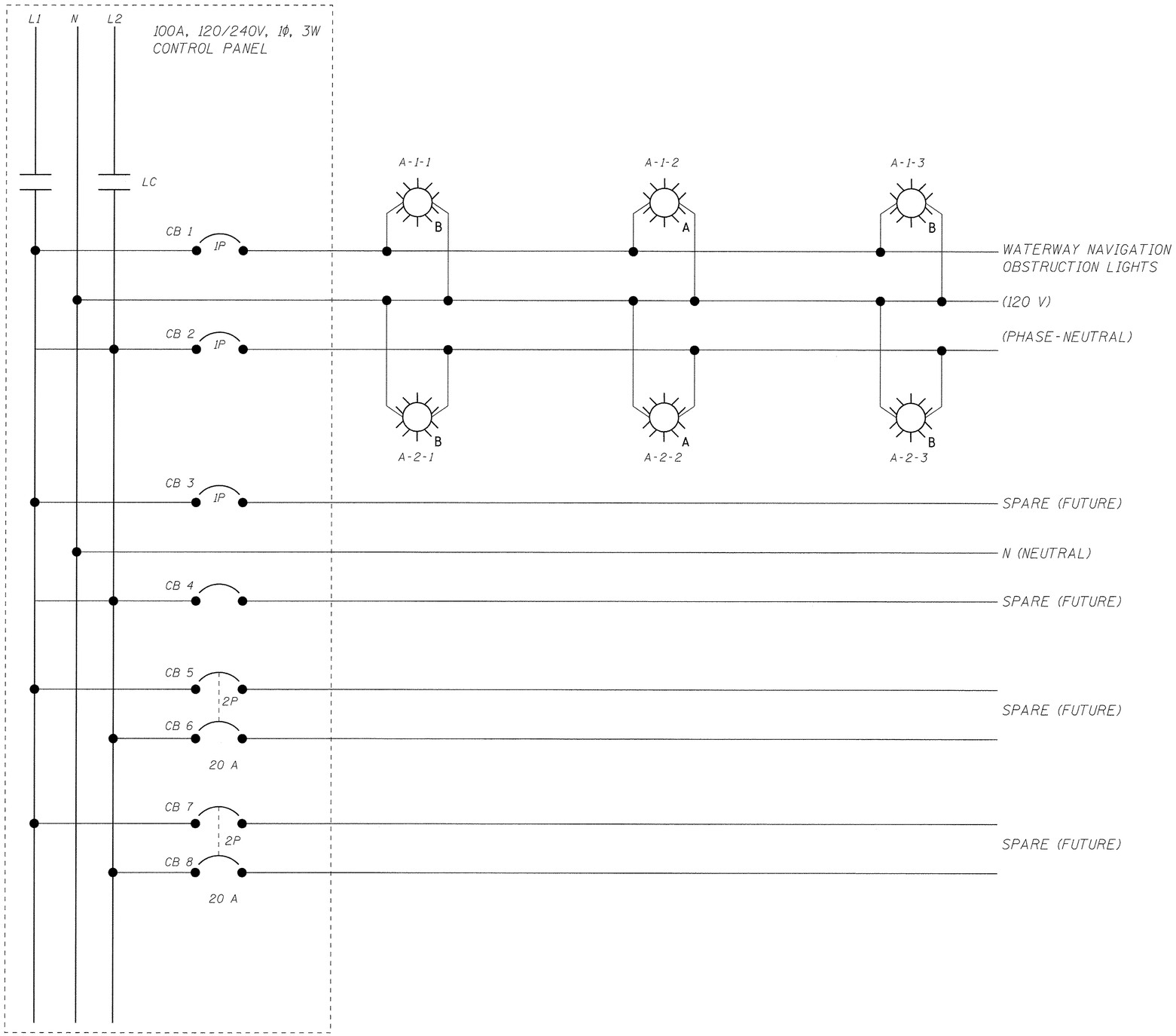

NOTES

1. THE COMPLETED NAVIGATION OBSTRUCTION LIGHTING CONTROLLER SHALL BE AN INDUSTRIAL CONTROL PANEL UNDER UL 508A ACCORDING TO ARTICLE 1068.01, EXCEPT THAT THE CONTROL CIRCUIT SHALL HAVE DUAL CONTROL COMPONENTS WHERE ROADWAY LIGHTING CAN BE OPERATED OUT OF THE SAME CONTROLLER AS NAVIGATION LIGHTING. THE CONTROL CIRCUIT SHALL BE AS DETAILED IN THE PLANS AND APPROVED BY THE ENGINEER.

3. EACH PHOTOCELL FURNISHED FOR NAVIGATION LIGHTING CONTROL SHALL BE CALIBRATED ACCORDING TO ARTICLE 1068.01(e)(2)h.

AECOM
303 East Wacker Drive, Suite 1400, Chicago, IL 60601
T 1-312-373-7700 F 1-312-373-6800

USER NAME =	DESIGNED - DAD	REVISED
	CHECKED - MAE	REVISED
PLOT SCALE =	DRAWN - MAE	REVISED
PLOT DATE = 8/4/2016	CHECKED - DAD	REVISED

STATE OF ILLINOIS
DEPARTMENT OF TRANSPORTATION

LIGHTING CONTROLLER WIRING DIAGRAM

SHEET NO. E-3 OF E-4 SHEETS

SECTION	COUNTY	TOTAL SHEETS	SHEET NO.
08-00178-02-BT	COOK	64	25
	CONTRACT NO. 61C12		
	ILLINOIS FED. AID PROJECT		

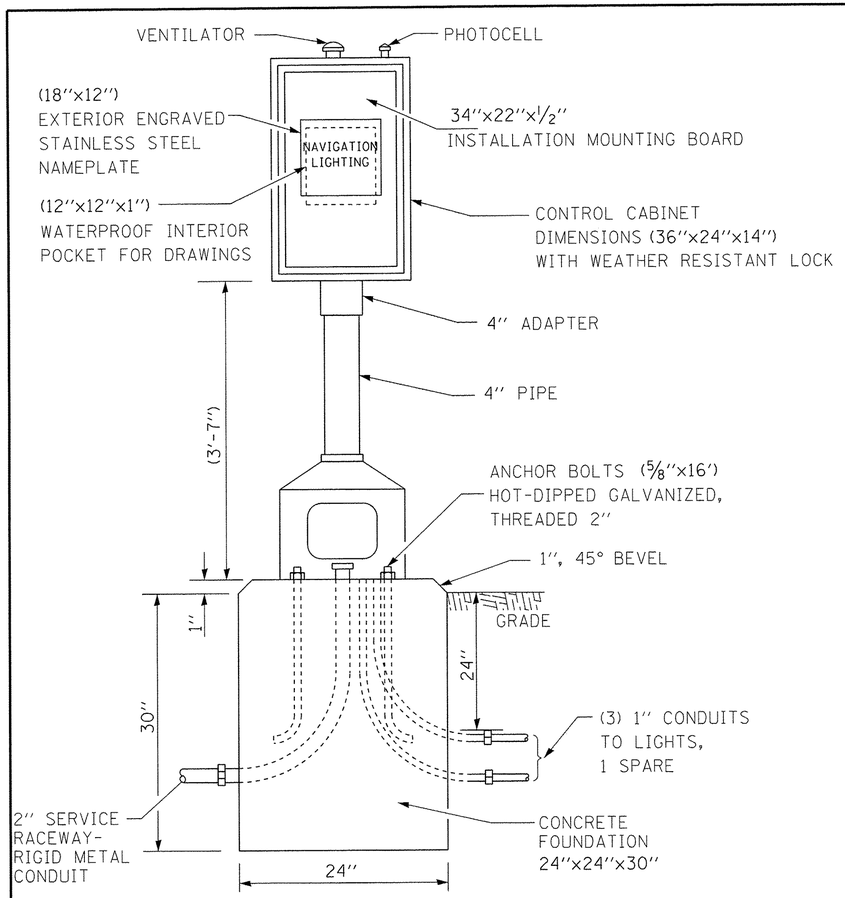

CONTROL INSTALLATION

FRONT VIEW

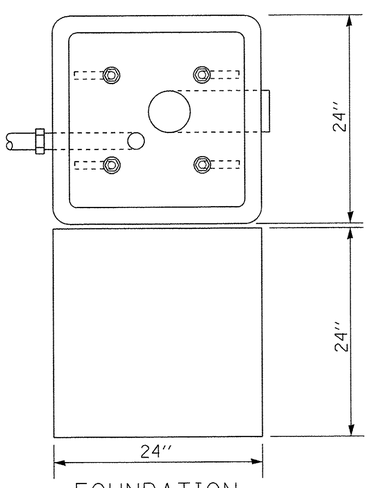

FOUNDATION

TOP VIEW

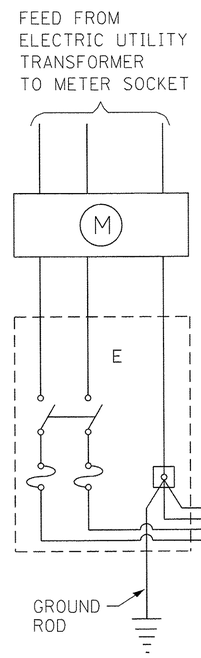

SERVICE DISCONNECT

ALUMINUM OR STAINLESS STEEL CABINET
NEMA 3R OR 4X RATED ENCLOSURE
36" H X 24" W X 14" D, AND MOUNTING PANEL
34" H X 22" W X1/2" D.
DOOR WITH STANDARD LOCK AND KEY.

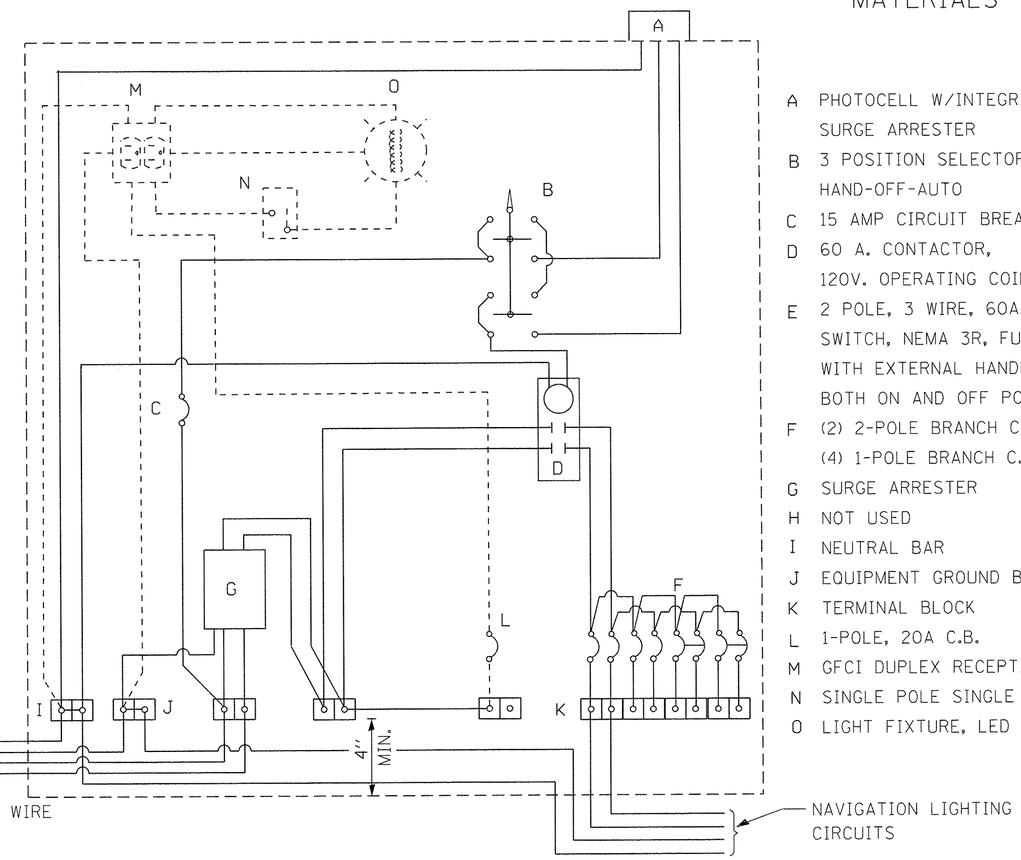

NAVIGATION LIGHTING CONTROL CABINET
WITH PHOTOCELL RELAY
1-PHASE, 120/240V, 3-WIRE SERVICE

MATERIALS

- A PHOTOCELL W/INTEGRAL SURGE ARRESTER
- B 3 POSITION SELECTOR SWITCH HAND-OFF-AUTO
- C 15 AMP CIRCUIT BREAKER.
- D 60 A. CONTACTOR, 120V. OPERATING COIL
- E 2 POLE, 3 WIRE, 60A. DISCONNECT SWITCH, NEMA 3R, FUSED 60A WITH EXTERNAL HANDLE LOCKABLE IN BOTH ON AND OFF POSITIONS.
- F (2) 2-POLE BRANCH C.B. (4) 1-POLE BRANCH C.B.
- G SURGE ARRESTER
- H NOT USED
- I NEUTRAL BAR
- J EQUIPMENT GROUND BAR
- K TERMINAL BLOCK
- L 1-POLE, 20A C.B.
- M GFCI DUPLEX RECEPTACLE
- N SINGLE POLE SINGLE THROW SWITCH
- O LIGHT FIXTURE, LED TYPE

GENERAL NOTES

ALL EQUIPMENT SHALL BE U.L. LISTED.
FOR PHOTOCELLS NOT HAVING INTERNAL SURGE PROTECTOR, PROVIDE 120V SURGE PROTECTOR IN CONTROL CIRCUIT AHEAD OF PHOTOCELL.
FOR 480V SYSTEMS, A 480/120 V CONTROL TRANSFORMER WILL BE REQUIRED. RECEPTACLE AND LIGHTING CIRCUIT IN THE CONTROLLER (SHOWN DASHED) MUST BE SPECIFIED.
METER SOCKET AND SAFETY DISCONNECT SWITCH ARE INCLUDED IN THE COST OF THE LIGHTING CONTROLLER AND WILL NOT BE PAID FOR SEPARATELY
DRAWING NOT TO SCALE.

AECOM
303 East Wacker Drive, Suite 1400, Chicago, IL 60601
T 1-312-373-7700 F 1-312-373-6800

USER NAME =	DESIGNED - DAD	REVISED
	CHECKED - MAE	REVISED
PLOT SCALE =	DRAWN - MAE	REVISED
PLOT DATE = 8/4/2016	CHECKED - DAD	REVISED

STATE OF ILLINOIS
DEPARTMENT OF TRANSPORTATION

NAVIGATION LIGHTING CONTROLLER DETAIL

SHEET NO. E-4 OF E-4 SHEETS

SECTION	COUNTY	TOTAL SHEETS	SHEET NO.
08-00178-02-BT	COOK	64	26
	CONTRACT NO. 61C12		
	ILLINOIS FED. AID PROJECT		

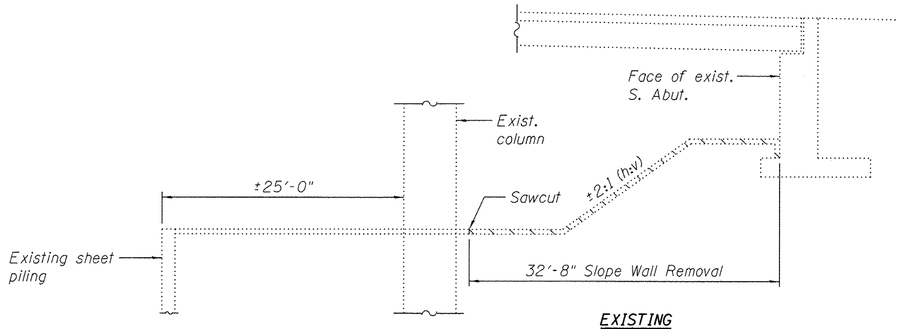

EXISTING

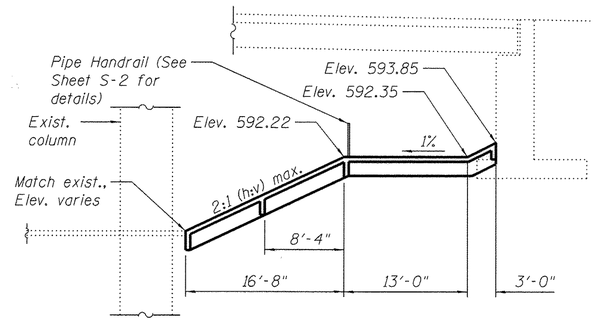

PROPOSED

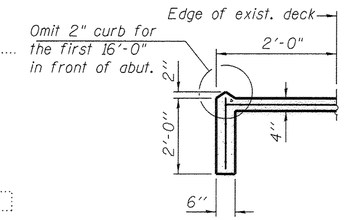

SECTION A-A

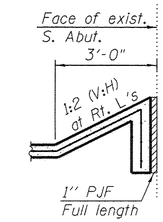

SECTION B-B

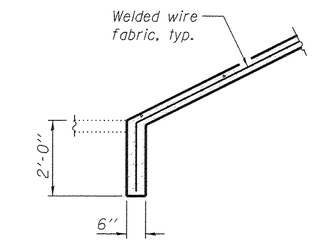

SECTION C-C

SECTION THRU SLOPEWALL

(Looking East)

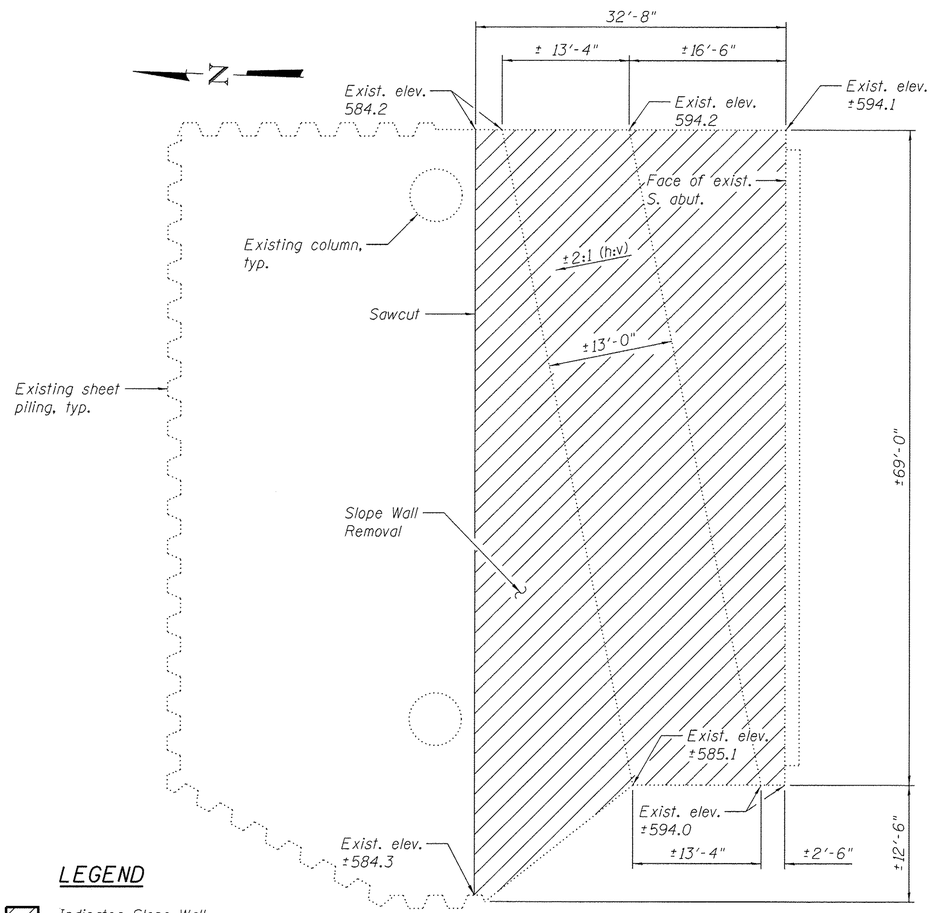

EXISTING

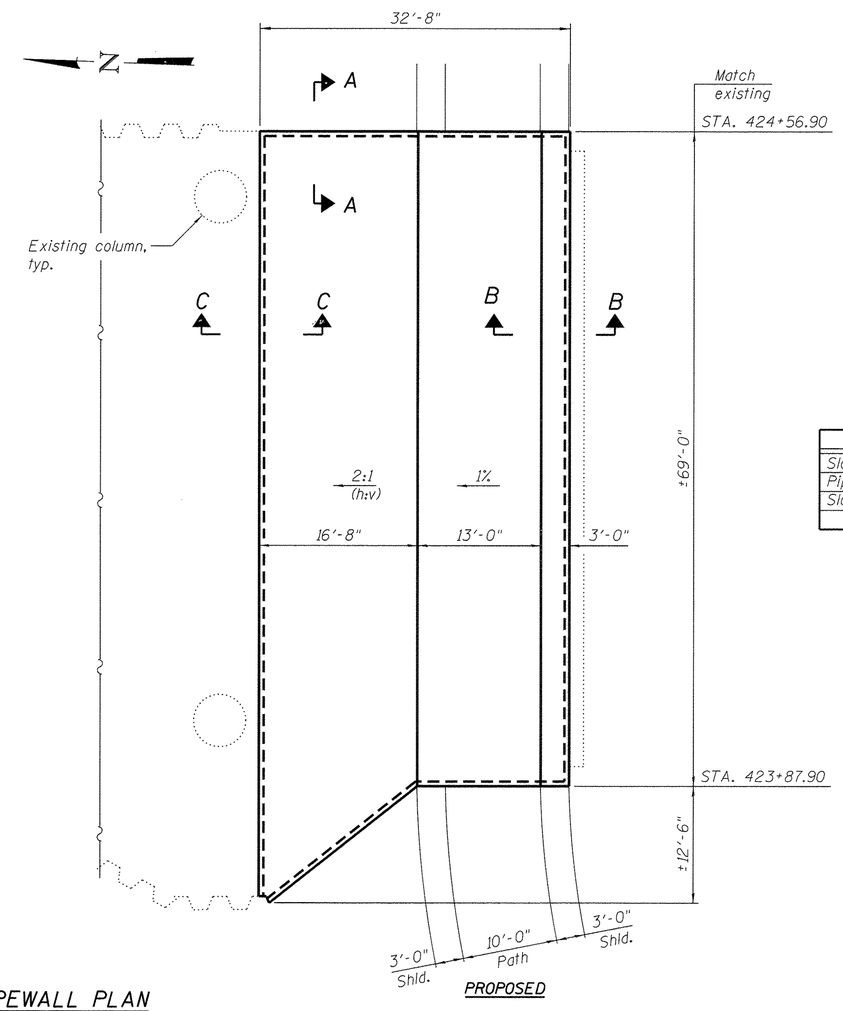

PROPOSED

SLOPEWALL PLAN

LEGEND

Indicates Slope Wall Removal

NOTES

1. Slopewall shall be reinforced with welded wire fabric, 6" x 6" - W4.0 x W4.0, weighing 58 lbs. per 100 sq. ft.
2. See Roadway Plans for earthwork quantities.

TOTAL BILL OF MATERIAL

ITEM	UNIT	TOTAL
Slope Wall Removal	Sq. Yd.	275
Pipe Handrail	Foot	69
Slope Wall 4 Inch	Sq. Yd.	282

STATE OF ILLINOIS
ARSALAN M. KHAN
081-006258
CHICAGO
LICENSED STRUCTURAL ENGINEER

8/4/16
ARSALAN M. KHAN, S.E.
LICENSE NO.: 081-006258
EXPIRES: NOVEMBER 30, 2016
(APPLIES TO SHEETS S-1 and S-2 ONLY)

AECOM
303 East Wacker Drive, Suite 1400, Chicago, IL 60601
T 1-312-373-7700 F 1-312-373-6800

USER NAME =	DESIGNED - AMK	REVISED
	CHECKED - NPP	REVISED
PLOT SCALE =	DRAWN - AMK	REVISED
PLOT DATE = 8/3/2016	CHECKED - NPP	REVISED

STATE OF ILLINOIS
DEPARTMENT OF TRANSPORTATION

SLOPEWALL MODIFICATIONS
STRUCTURE NO. 016-0294

SHEET NO. S-1 OF S-2 SHEETS

SECTION	COUNTY	TOTAL SHEETS	SHEET NO.
08-00178-02-BT	COOK	64	27
	CONTRACT NO. 61C12		
	ILLINOIS FED. AID PROJECT		

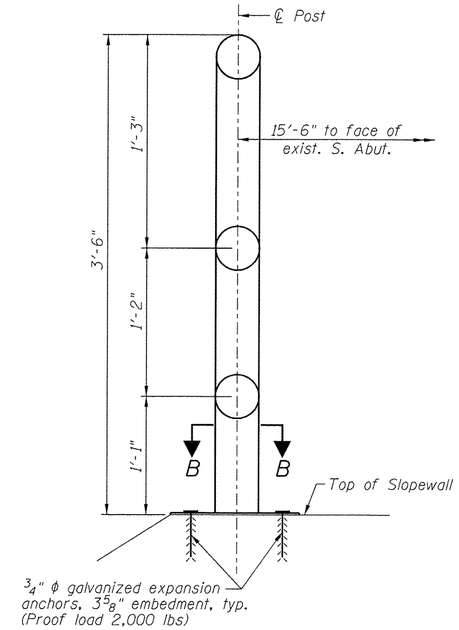

DETAIL - SLOPEWALL MOUNTED RAIL POST

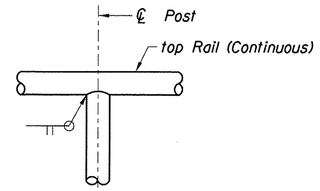

DETAIL 1

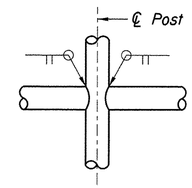

DETAIL 2

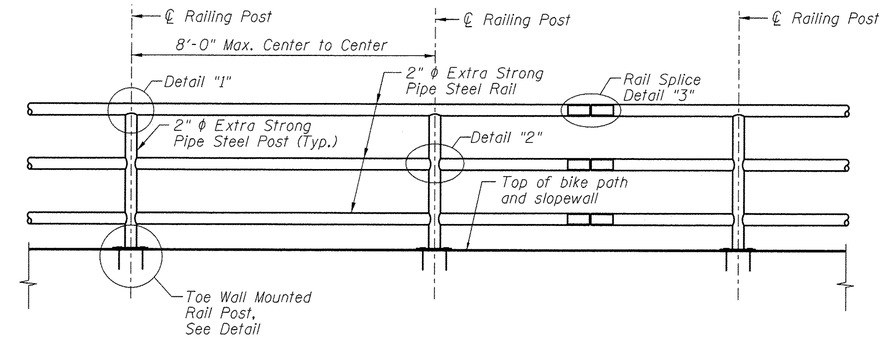

TYPICAL PIPE HANDRAIL ELEVATION

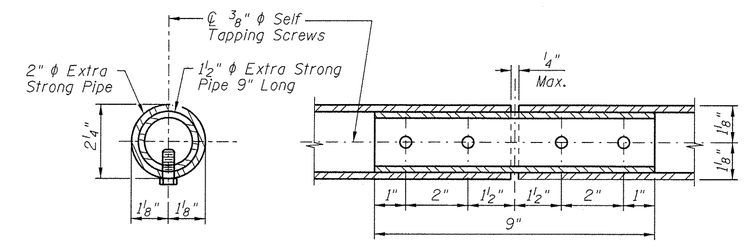

DETAIL 3 - RAIL SPLICE

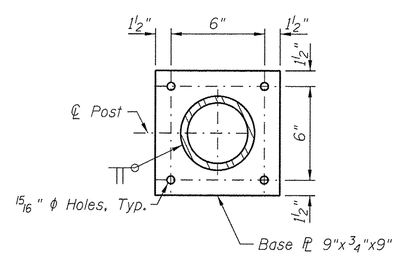

SECTION B-B

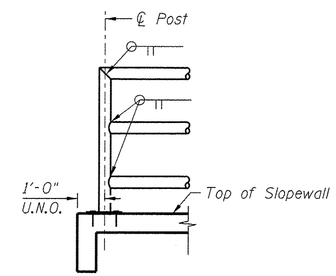

ELEVATION SHOWING END POST

NOTES:

1. Railing shall be according to Section 509 of the Standard Specifications, except as noted, and will be paid for at the contract unit price per foot for Pipe Handrail.
2. Hollow structural steel tubing shall conform to the requirements of ASTM designation A 500, Grade B, Structural Steel Tubing.
3. All other steel shapes and plates shall conform to the requirements of AASHTO M-270M, Grade 345.
4. All posts, railing, splices, anchor devices, and bent plates shall be galvanized after shop fabrication according to AASHTO M-111 and ASTM A-385. All bolts, nuts and washers shall be galvanized according to AASHTO M-232.
5. Vent holes for galvanizing shall be placed in the posts and rails at locations that will not allow the accumulation of moisture in the members.

Benchmark: Nail at centerline-centerline of Halsted Street and Marina entrance. Elevation: 597.31

Existing Structure: None

See Electrical Plans for other details of navigational lights. Cost of navigation lights, conduit, junction boxes and associated items is included with electrical pay items.

INDEX OF SHEETS

S-1 General Plan and Elevation
S-2 General Notes and Bill of Material
S-3 Bridge Approach Slab Details
S-4 North Abutment Details
S-5 Piers 1 & 2
S-6 South Abutment Details
S-7 Soil Boring Logs 1
S-8 Soil Boring Logs 2

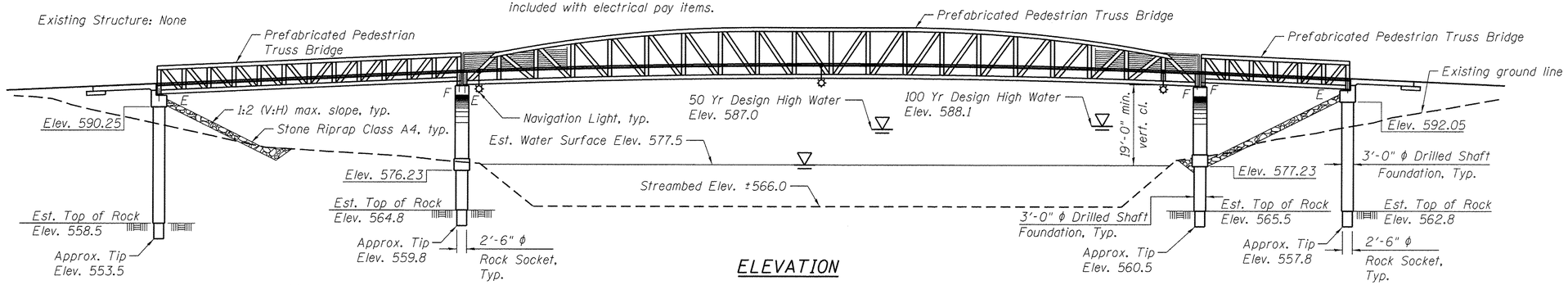

ELEVATION

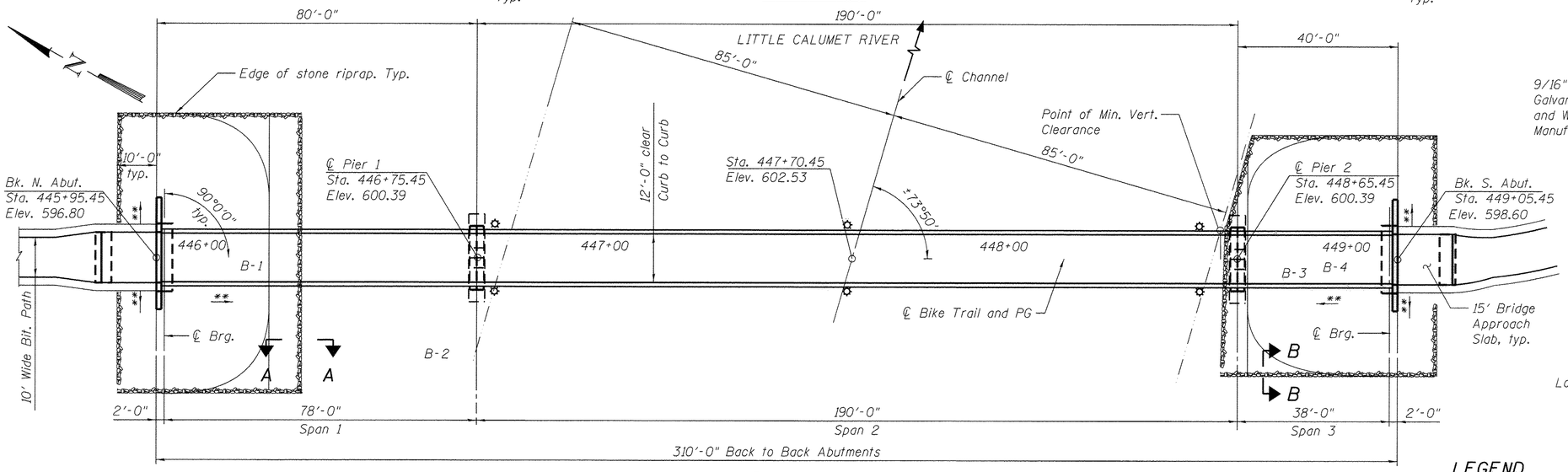

PLAN

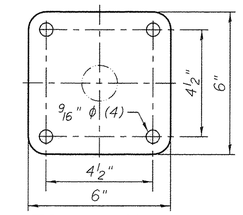

MOUNTING DETAIL FOR NAVIGATION LIGHT

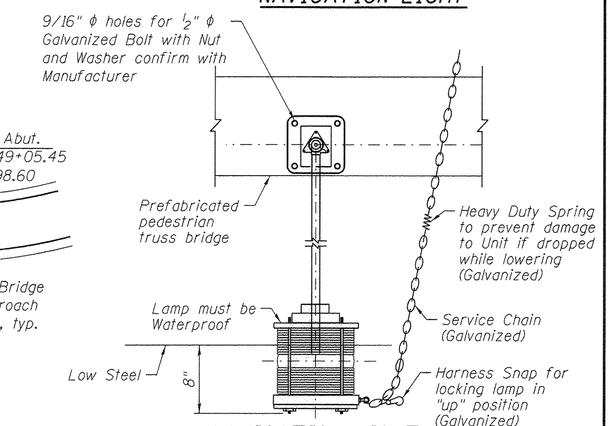

NAVIGATION LIGHT MOUNTING ELEVATION

LEGEND

Soil Boring
** 1:2 (V:H) max. slope

DESIGN SPECIFICATIONS

2012 AASHTO LRFD Bridge Design Specifications, 7th Edition

2009 AASHTO LRFD Guide Specifications for the Design of Pedestrian Bridges

LOADING H10 & PEDESTRIAN

Vehicle: H-10 Truck (20,000 lb. Vehicle)
Pedestrian: 90 psf
(No allowance for future wearing surface)

DESIGN STRESSES

FIELD UNITS

f'c = 3,500 psi
fy = 60,000 psi (Reinforcement)
fy = 50,000 psi (M270 Grade 50W) - Truss

SEISMIC DATA

Seismic Performance Zone (SPZ) = 1
Design Spectral Acceleration at 1.0 sec. (S_{D1}) = 0.038g
Design Spectral Acceleration at 0.2 sec. (S_{DS}) = 0.095g
Soil Site Class = C

DESIGN SCOUR ELEVATION TABLE

Design Scour Elevations (ft.)			
N. Abut.	Pier 1	Pier 2	S. Abut.
581.0	565.8	565.5	582.0

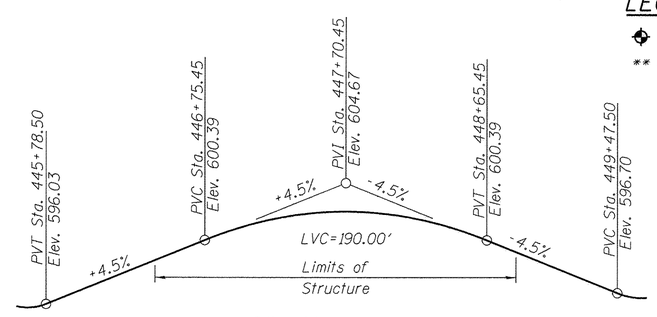

PROFILE GRADE

WATERWAY INFORMATION

Drainage Area = 291 sq. mi. Low Grade Elev. 596.3 @ Sta. 448+68

Flood	Freq. Yr.	Q C.F.S.	Opening Sq. Ft. Exist.	Opening Sq. Ft. Prop.	Nat. H.W.E.	Head - Ft. Exist.	Head - Ft. Prop.	Headwater El. Exist.	Headwater El. Prop.
Design	50	9,000	2,405	2,405	587.0	0.0	0.0	587.0	587.0
Base	100	10,559	2,750	2,750	588.1	0.0	0.0	588.1	588.1
Overtopping	*	*	*	*	*	*	*	*	*
Max. Calc.	500	*	*	*	*	0.0	0.0	*	*

* No Information Available

NOTES

1. For Sections A-A and B-B see sheet S-2.
2. Layout of the slope protection system may be varied to suit ground conditions in the field as directed by the Engineer.

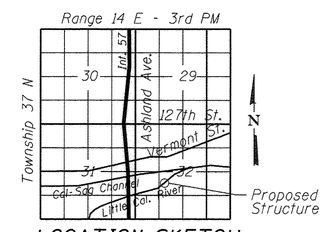

LOCATION SKETCH

STATE OF ILLINOIS
DONALD E. YETTER
081-004709
NAPERVILLE, IL
LICENSED STRUCTURAL ENGINEER

Donald E. Yetter 8/4/16

DONALD E. YETTER DATE
LICENSED STRUCTURAL ENGINEER
STATE OF ILLINOIS 081-004709
EXPIRES 11/30/2016

GENERAL PLAN AND ELEVATION
CAL-SAG GREENWAY OVER LITTLE CALUMET RIVER
PUBLIC WATER
SECTION 08-00178-02-BT
COOK COUNTY
STATION 447+70.45

AECOM
303 East Wacker Drive, Suite 1400, Chicago, IL 60601
T 1-312-373-7700 F 1-312-373-6800

USER NAME =	DESIGNED - MBQ	REVISED
	CHECKED - NPP	REVISED
PLOT SCALE =	DRAWN - MBQ	REVISED
PLOT DATE = 16	CHECKED - NPP	REVISED

STATE OF ILLINOIS
DEPARTMENT OF TRANSPORTATION

LITTLE CALUMET RIVER PEDESTRIAN BRIDGE
GENERAL PLAN AND ELEVATION
SHEET NO. S-1 OF S-8 SHEETS

SECTION	COUNTY	TOTAL SHEETS	SHEET NO.
08-00178-02-BT	COOK	64	29

CONTRACT NO. 61C12
ILLINOIS FED. AID PROJECT

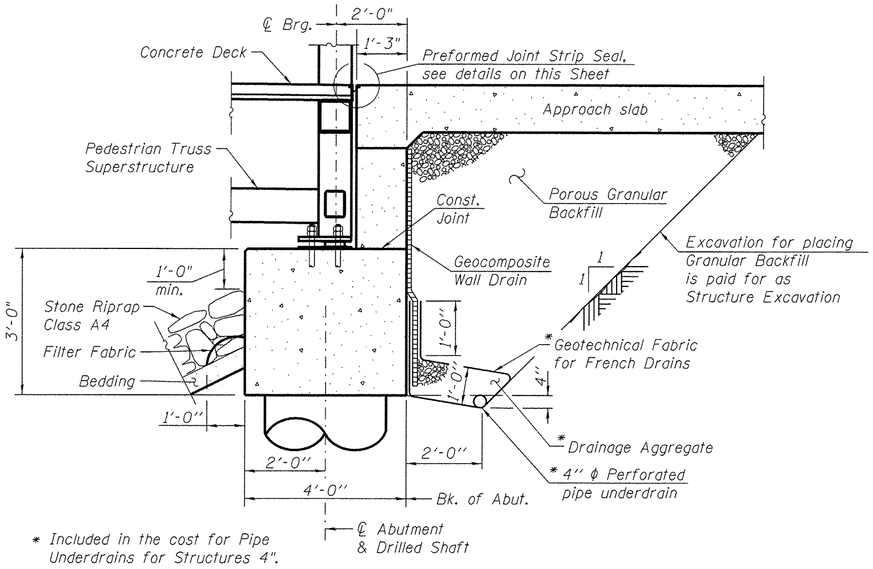

* Included in the cost for Pipe Underdrains for Structures 4".

SECTION THRU ABUTMENT

(Horiz. dim. @ Rt. L's)

Note:
All Drainage System components shall extend to 2'-0" from the end of each wingwall except an outlet pipe shall extend until intersecting with the side slopes. The pipes shall drain into concrete headwalls. (See Article 601.05 of the Standard Specifications and Highway Standard 601101). Concrete headwall shall be included in the cost of Pipe Underdrains for Structures 4".

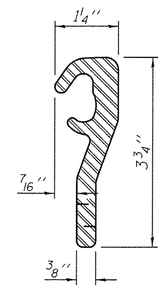

LOCKING EDGE RAIL

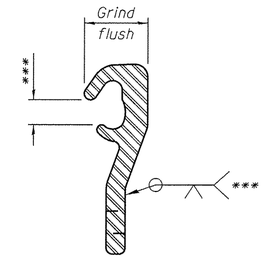

*** Omit weld at seal opening.

LOCKING EDGE RAIL SPLICE

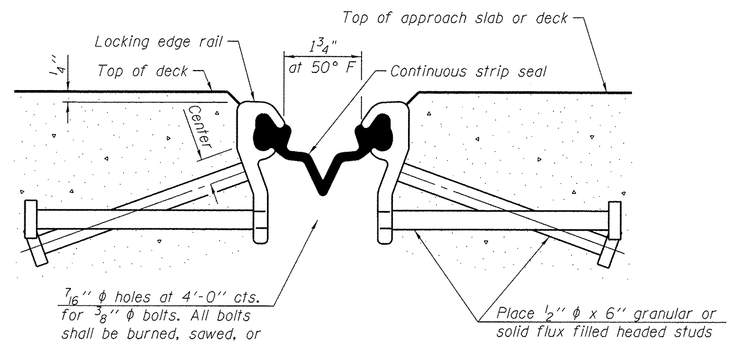

SECTION THRU STRIP SEAL JOINT

Place at each deck joint.

Strip Seal Notes:
The strip seal shall be made continuous and shall have a minimum thickness of ¼". The configuration of the strip seal shall match the configuration of the Locking Edge Rails.
The height and thickness of the Locking Edge Rails shown are minimum dimensions. The actual configuration of the Locking Edge Rails and matching strip seal may vary from manufacturer to manufacturer. Flanged edge rails will not be allowed.
The inside of the Locking Edge Rail groove shall be free of weld residue.
Locking Edge Rails may be spliced at slope discontinuities.
The manufacturer's recommended installation methods shall be followed.

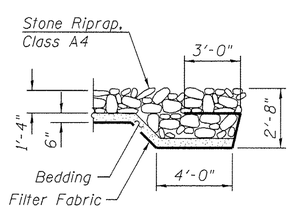

SECTION B-B

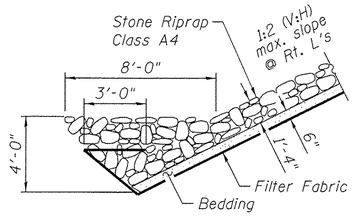

SECTION A-A

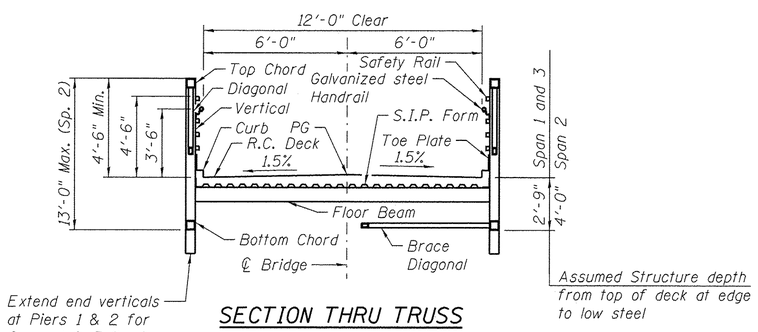

SECTION THRU TRUSS

Note: Structure depths shown are subject to refinement per Truss Manufacturer.

TRUSS REACTION TABLE (UNFACTORED)

Loading Type	P (Kips)		H (Kips)	
	Span 1 & Span 3	Span 2	Span 1 & Span 3	Span 2
Dead Load	24.1	98.8	-	-
Uniform Live Load	22.0	51.3	-	-
Vehicle Load	10.0	10.0	-	-
Wind Load	±3.0	±25.4	9.6	44.9

Loads are provided by a fabricator and are for reference only
P = Vertical Load at Each Bearing
H = Horizontal Load at Each Footing

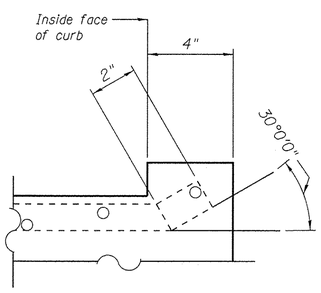

EXPANSION JOINT AT CURB

(Showing plate)
(N.T.S.)

GENERAL NOTES

1. Reinforcement bars designated (E) shall be epoxy coated.
2. The embankment configuration shown shall be the minimum that must be placed and compacted prior to construction of the abutments.
3. Concrete Sealer shall be applied to the designated areas of the abutments.
4. The Prefabricated Pedestrian Truss shall not be painted.
5. All structural steel shall be AASHTO M 270 Grade 50W (except expansion joints which shall be AASHTO M 270 Grade 50).
6. No field welding is permitted except as specified in the contract documents.
7. Protective Coat shall be applied to both the approach slabs and the pedestrian truss superstructure reinforced concrete deck.
8. All structural steel and exposed surfaces of bearings within 10 feet each way from the deck joints shall be painted as specified in Section 506 of the Standard Specifications.

PREFABRICATED TRUSS

1. The substructure is designed per AASHTO LRFD and based on the assumed truss loads given in the Truss Reaction table.
2. It is the intent of these plans to construct truss superstructures that mimic, to the extent possible, the adjacent camelback truss bridges on the Calumet Sag Channel and Little Calumet River. Truss top chord profile is to resemble that shown in the Elevation view on the General Plan and Elevation Sheet. Curved and/or chorded segments may be used to achieve the desired effect.
3. Truss Manufacturer shall camber the truss as necessary to provide allowance for dead load deflection.
4. Bridge bearing seat elevations and ℄ bearing locations are subject to revision based on the approved pedestrian truss superstructure shop drawings. Contractor shall verify all dimensions and elevations with final approved shop drawings.
5. Truss manufacturer shall provide the reinforced concrete deck design. Concrete deck to utilize stay-in-place galvanized forms. Reinforcement shall be epoxy coated. Contractor shall place the concrete deck after truss is set. Safety rail shall be M270 Grade 50W and handrail shall be galvanized steel. Cost included with "Pedestrian Truss Superstructure". Protective coat shall be paid for under pay item "Protective Coat".
6. The contractor shall submit shop drawings for attachment of navigation light, conduit, junction boxes and other associated electrical items to prefabricated truss bridge for approval.

TOTAL BILL OF MATERIAL

	ITEM	UNIT	SUPER	SUB	TOTAL
	Porous Granular Backfill	Cu. Yd.	-	54.0	54.0
	Stone Riprap, Class A4	Sq. Yd.	-	1,019	1,019
	Filter Fabric	Sq. Yd.	-	1,019	1,019
	Structure Excavation	Cu. Yd.	-	86.0	86.0
	Concrete Structures	Cu. Yd.	3.2	93.2	96.4
	Concrete Superstructure	Cu. Yd.	12.8	-	12.8
	Protective Coat	Sq. Yd.	475	-	475
	Reinforcement Bars	Pound	-	2,380	2,380
	Reinforcement Bars, Epoxy Coated	Pound	2,150	24,000	26,150
	Drilled Shaft in Soil	Cu. Yd.	-	50.4	50.4
	Drilled Shaft in Rock	Cu. Yd.	-	9.4	9.4
	Preformed Joint Strip Seal	Foot	50.0	-	50.0
	Concrete Sealer	Sq. Ft.	-	1,170	1,170
	Geocomposite Wall Drain	Sq. Yd.	-	36	36
**	Pedestrian Truss Superstructure	Sq. Ft.	3,720	-	3,720
**	Pipe Underdrains for Structures 4"	Foot	-	88	88

** Special Provision

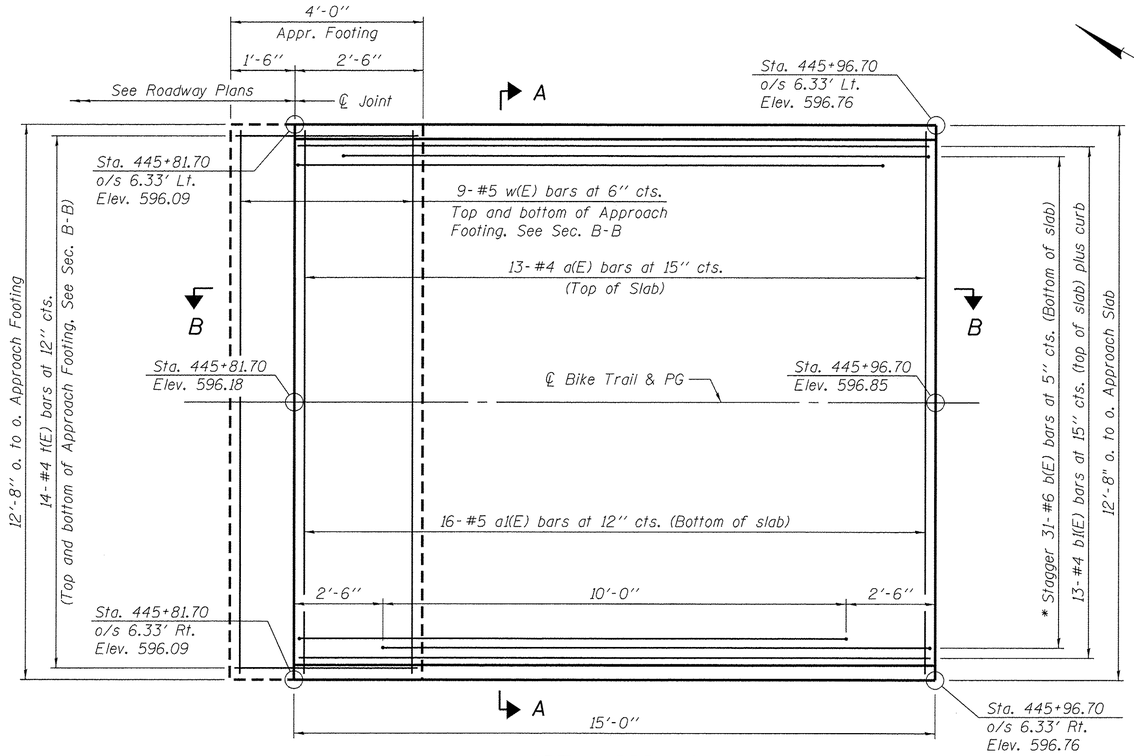

NORTH APPROACH

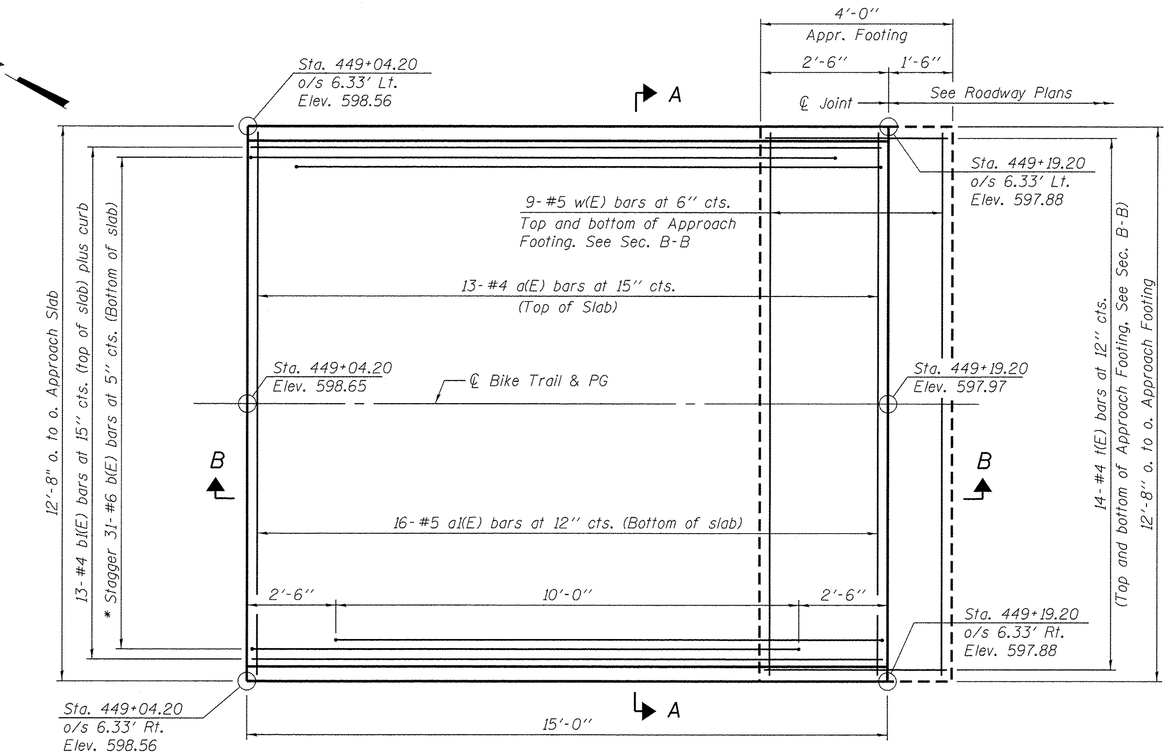

SOUTH APPROACH

PLAN

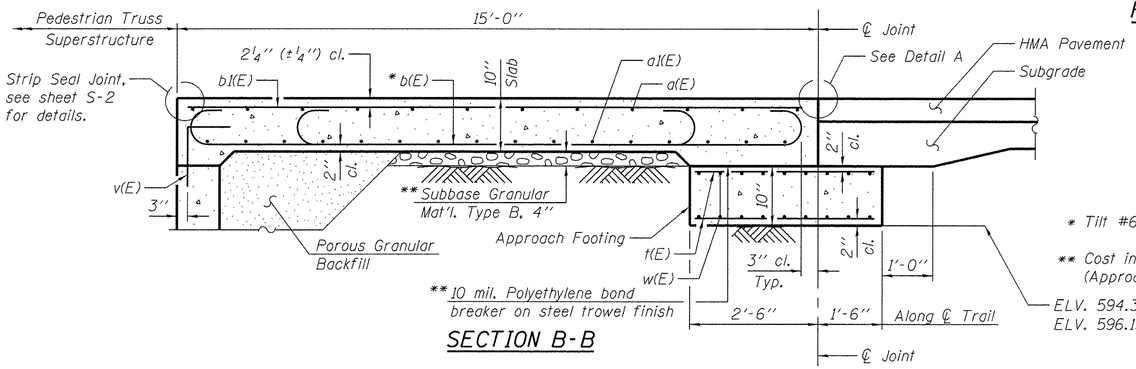

SECTION B-B

* Tilt #6 b(E) bars to maintain clearance.

** Cost included with Concrete Superstructure (Approach Slab).

ELV. 594.34 NORTH APPROACH
ELV. 596.13 SOUTH APPROACH

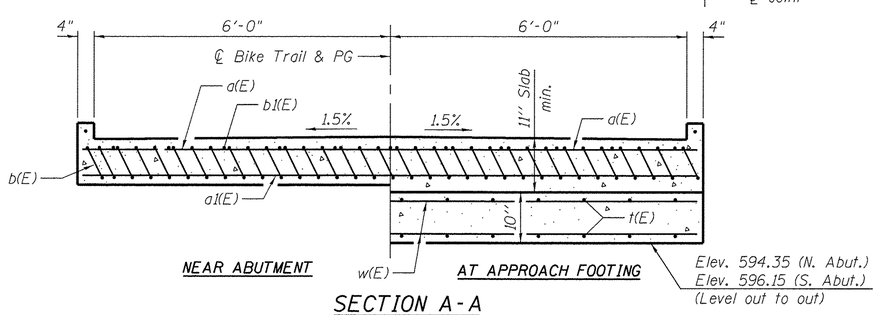

NEAR ABUTMENT

AT APPROACH FOOTING

SECTION A-A

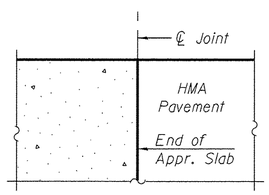

DETAIL A

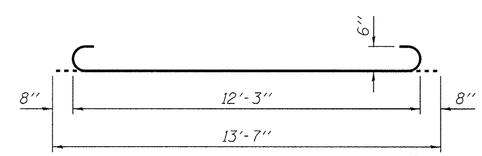

BAR b(E)

TWO APPROACHES BILL OF MATERIAL

Bar	No.	Size	Length	Shape
a(E)	26	#4	12'-4"	
a1(E)	32	#5	12'-4"	
b(E)	62	#6	13'-7"	
b1(E)	26	#4	14'-6"	
t(E)	56	#4	3'-8"	
w(E)	36	#5	12'-4"	
Concrete Structures			Cu. Yd.	3.2
Concrete Superstructure			Cu. Yd.	12.8
Reinforcement Bars, Epoxy Coated			Pound	2,760

NOTES:

1. Approach slab concrete shall be paid for as Concrete Superstructure.
2. Approach footing concrete shall be paid for as Concrete Structures.
3. Reinforcement shall be paid for as Reinforcement Bars, Epoxy Coated.
4. For v(E) bar details, see sheet S-4.
5. The approach footing maximum applied service bearing pressure (Qmax) = 2.0 ksf.
6. Cost of excavation for approach footing included with Concrete Structures.
7. For Porous Granular Backfill and drainage treatment details, see sheet S-2.

AECOM
303 East Wacker Drive, Suite 1400, Chicago, IL 60601
T 1-312-373-7700 F 1-312-373-6800

USER NAME =	DESIGNED - PSK	REVISED
	CHECKED - NPP	REVISED
PLOT SCALE =	DRAWN - PSK	REVISED
PLOT DATE = 8/4/2016	CHECKED - NPP	REVISED

STATE OF ILLINOIS
DEPARTMENT OF TRANSPORTATION

BRIDGE APPROACH SLAB DETAILS

SHEET NO. S-3 OF S-8 SHEETS

SECTION	COUNTY	TOTAL SHEETS	SHEET NO.
08-00178-02-BT	COOK	64	31
	CONTRACT NO. 61C12		
	ILLINOIS FED. AID PROJECT		

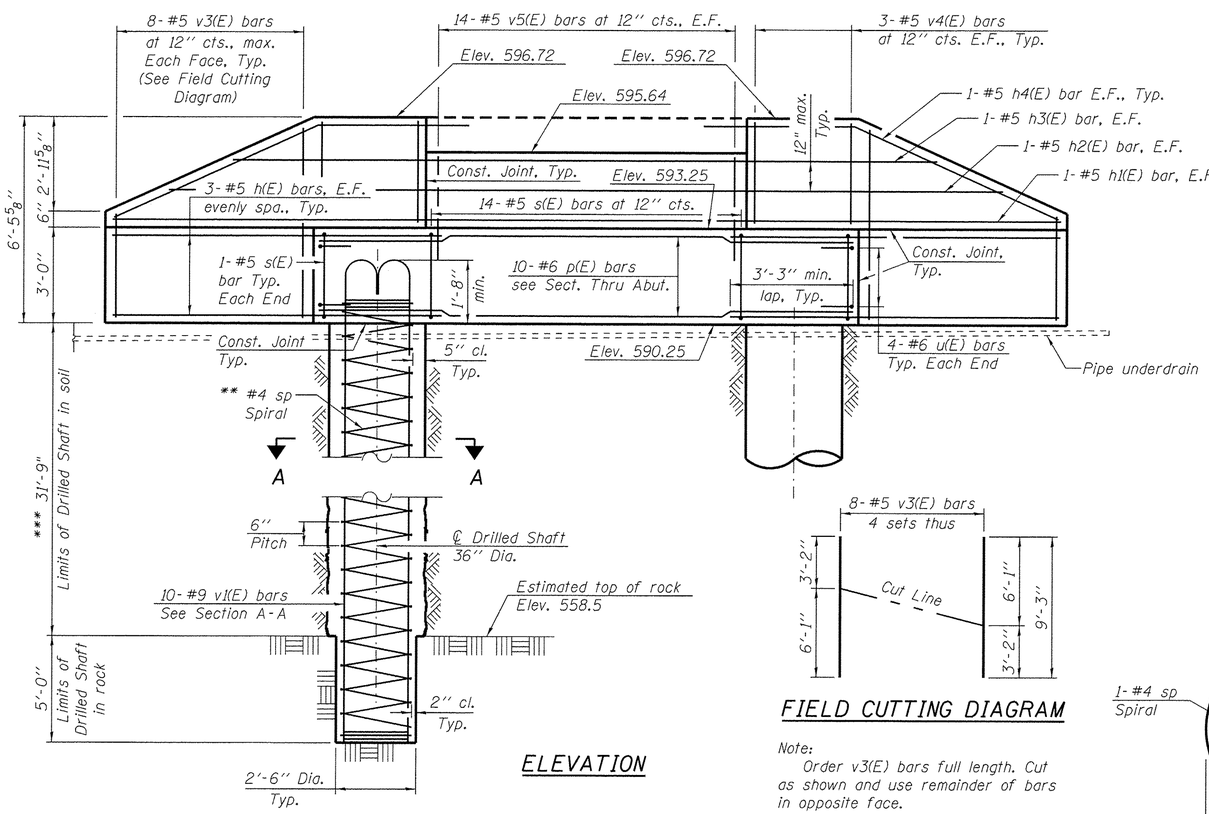

ELEVATION

FIELD CUTTING DIAGRAM

Note:
Order v3(E) bars full length. Cut as shown and use remainder of bars in opposite face.

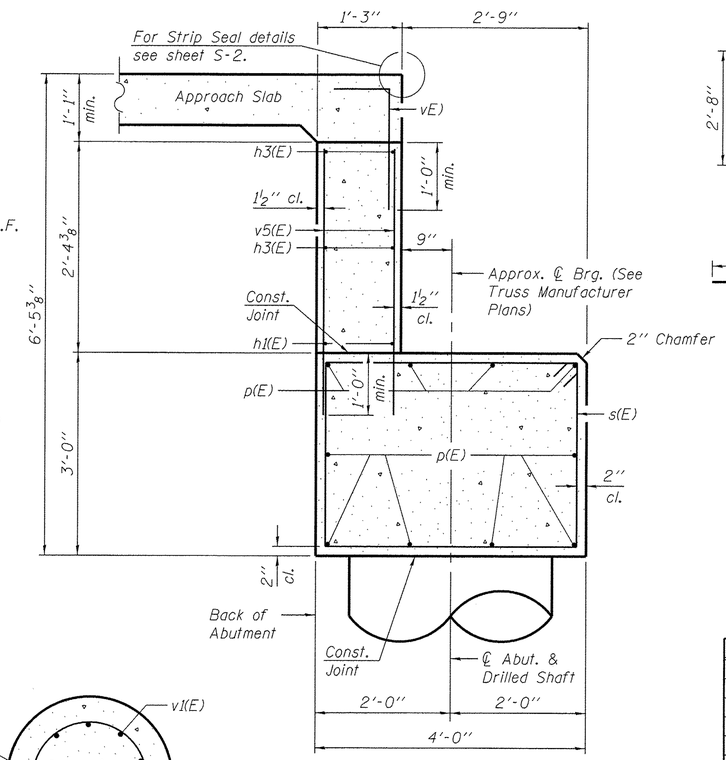

SECTION THRU ABUTMENT

Note:
See sheet S-2 for drainage and backfill details.

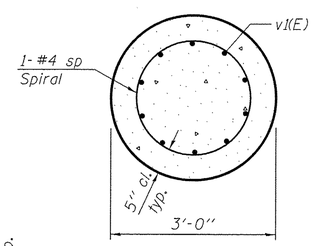

SECTION A-A

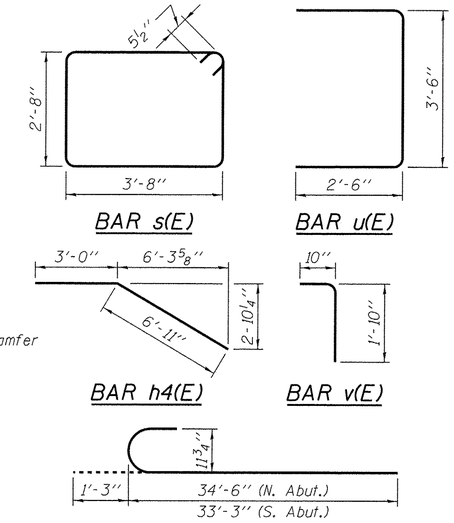

NORTH ABUTMENT BILL OF MATERIAL

	Bar	No.	Size	Length	Shape
	h(E)	12	#5	9'-9"	
	h1(E)	2	#5	29'-8"	
	h2(E)	2	#5	26'-6"	
	h3(E)	2	#5	22'-1"	
	h4(E)	4	#5	9'-11"	
	p(E)	10	#6	16'-8"	
	s(E)	16	#5	13'-7"	
*	sp	2	#4	36'-11"	
	u(E)	8	#6	8'-6"	
	v(E)	14	#5	2'-8"	
	v1(E)	20	#9	39'-8"	
	v3(E)	16	#5	9'-3"	
	v4(E)	12	#5	4'-2"	
	v5(E)	28	#5	3'-2"	
	Porous Granular Backfill			Cu. Yd.	27
	Structure Excavation			Cu. Yd.	43
	Concrete Structures			Cu. Yd.	12.7
	Reinforcement Bars			Pound	710
	Reinforcement Bars, Epoxy Coated			Pound	3,950
	Drilled Shaft in Soil			Cu. Yd.	16.7
	Drilled Shaft in Rock			Cu. Yd.	1.9
	Concrete Sealer			Sq. Ft.	94
	Geocomposite Wall Drain			Sq. Yd.	18
	Pipe Underdrains for Structures 4"			Foot	44

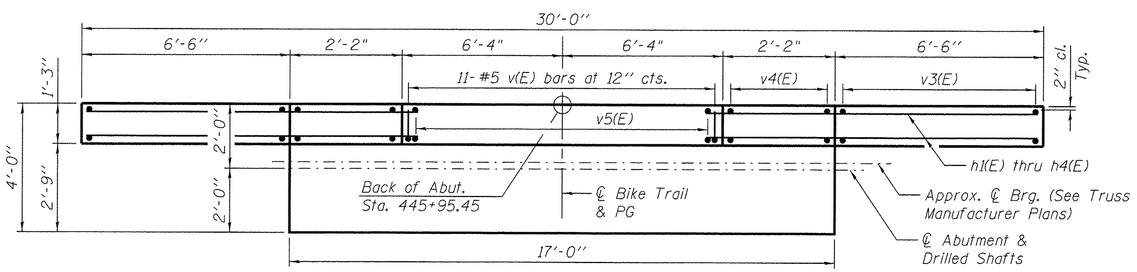

PLAN - BACKWALL

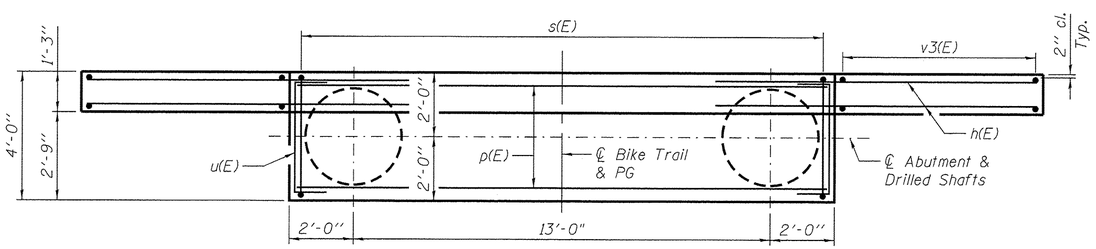

PLAN - ABUTMENT CAP

BEARING SEAT ELEVATIONS

N. Abut.	593.25
S. Abut.	595.05

Note:
Seat elevations may change based on truss manufacturer's design drawings. Contractor shall verify elevations and dimensions prior to ordering materials.

LEGEND:

* Length is Height of spiral.

** Provide 1½ extra turns top and bottom of each drilled shaft. Extend spiral 2" min. into abutment cap. Provide min. 4-#4 spacers or equivalent.

*** The quantities and detailing are based on the estimated elevations shown on the plans. The actual elevations may differ at each shaft and corresponding adjustments shall be made to the drilled shaft and reinforcement quantities and payment limits.

NOTES:

1. For approach slab details see sheet S-3.
2. Anchor Bolt design and locations shall be per Truss Manufacturer. The Contractor shall place top cap reinforcement to miss anchor bolt locations. Cost of Anchor Bolts is included in cost of Pedestrian Truss Superstructure.
3. E.F. denotes each face.
4. Concrete Sealer shall be applied to the backwall, bearing seat and the exposed portion of the abutment cap.

AECOM
303 East Wacker Drive, Suite 1400, Chicago, IL 60601
T 1-312-373-7700 F 1-312-373-6800

USER NAME =	DESIGNED - PSK	REVISED
	CHECKED - NPP	REVISED
PLOT SCALE =	DRAWN - PSK	REVISED
PLOT DATE = 8/4/2016	CHECKED - NPP	REVISED

STATE OF ILLINOIS
DEPARTMENT OF TRANSPORTATION

NORTH ABUTMENT DETAILS

SHEET NO. S-4 OF S-8 SHEETS

SECTION	COUNTY	TOTAL SHEETS	SHEET NO.
08-00178-02-BT	COOK	64	32
	CONTRACT NO. 61C12		
	ILLINOIS FED. AID PROJECT		

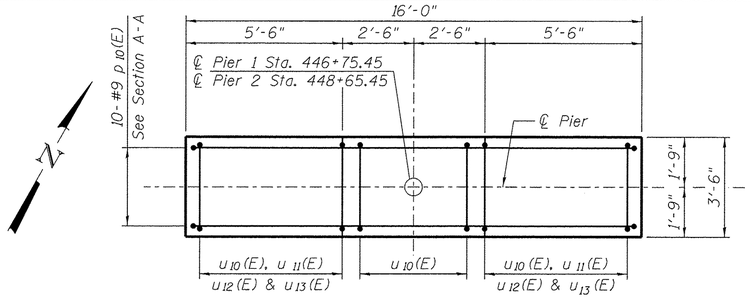

PLAN

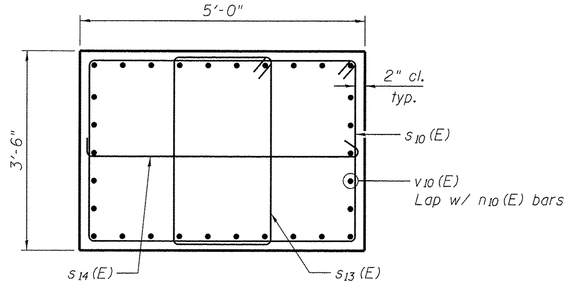

SECTION B-B

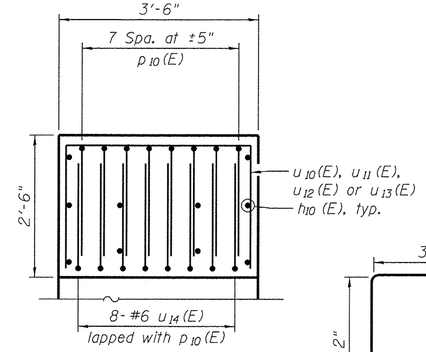

SECTION A-A

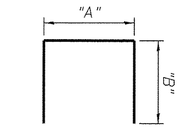

Bar	"A"	"B"
p10 (E)	15'-8"	2'-1"
s11 (E)	3'-2"	7'-5"
s12 (E)	3'-2"	4'-7"
u10 (E)	3'-0½"	2'-4"
u11 (E)	3'-0½"	3'-3"
u12 (E)	3'-0½"	3'-11"
u13 (E)	3'-0½"	5'-9"

BARS p10 (E), s11 (E), s12 (E), u10 (E), u11 (E), u12 (E), & u13 (E)

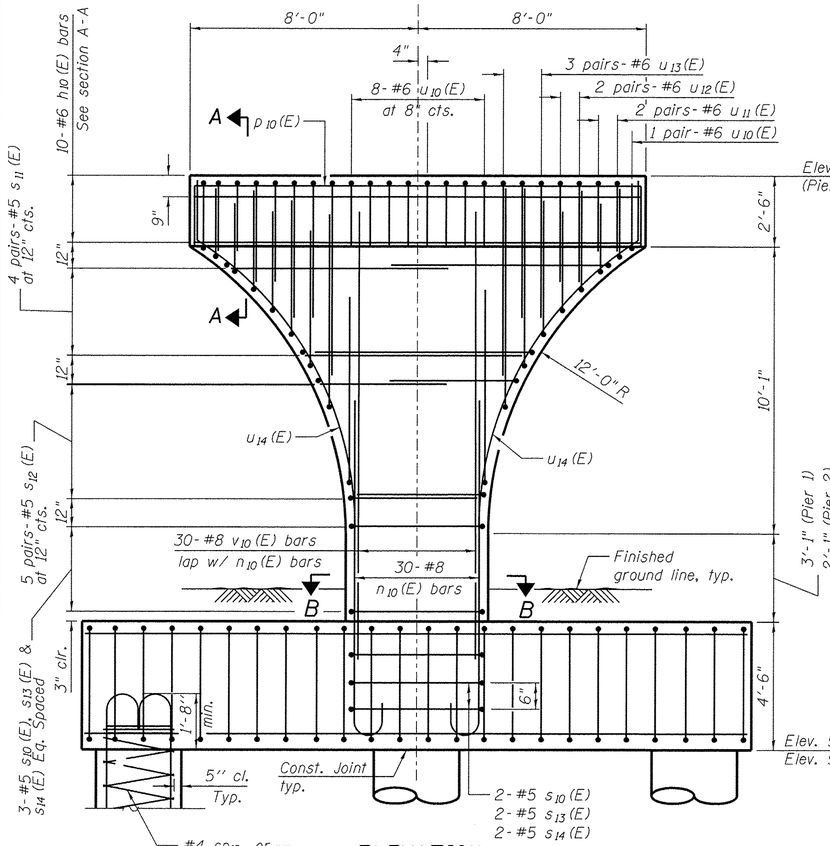

ELEVATION
(Looking North)

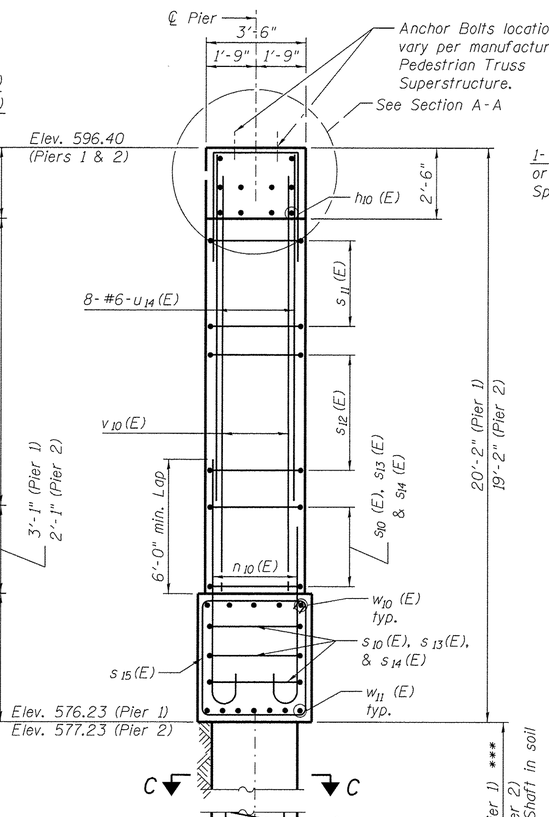

END VIEW

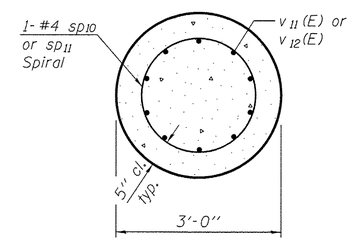

SECTION C-C

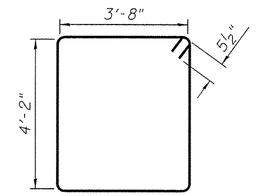

BAR s15(E)

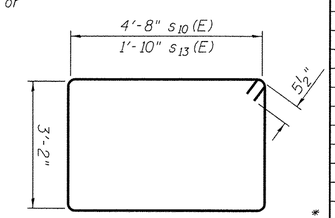

BAR s10(E) & s13(E)

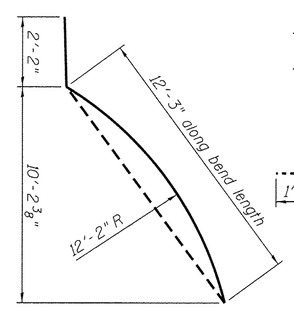

BAR u14(E)

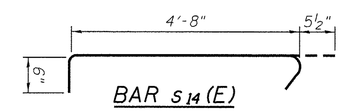

BAR s14(E)

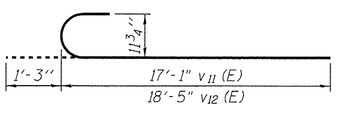

BAR v11(E) or v12(E)

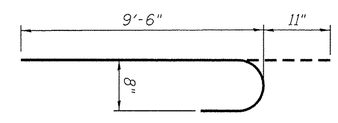

BAR n10(E)

PIERS 1 & 2
BILL OF MATERIAL

	Bar	Size	Length	Shape	No. Pier 1	No. Pier 2
	h10(E)	#6	15'-8"		10	10
	n10(E)	#8	10'-5"		30	30
	p10(E)	#9	19'-10"		8	8
	s10(E)	#5	16'-7"		7	7
	s11(E)	#5	18'-0"		8	8
	s12(E)	#5	12'-4"		10	10
	s13(E)	#5	10'-11"		7	7
	s14(E)	#5	5'-8"		7	7
	s15(E)	#5	16'-7"		24	24
*	sp10	#4	16'-7"		3	
*	sp11	#4	16'-11"			3
	u10(E)	#6	7'-9"		12	12
	u11(E)	#6	9'-7"		8	8
	u12(E)	#6	10'-11"		8	8
	u13(E)	#6	14'-7"		12	12
	u14(E)	#6	14'-5"		16	16
	v10(E)	#8	15'-8"		30	30
	v11(E)	#9	18'-4"		30	
	v12(E)	#9	19'-8"			30
	w10(E)	#9	23'-2"		5	5
	w11(E)	#10	23'-2"		7	7
	Concrete Structures			Cu. Yd.	34.2	33.6
	Reinforcement Bars			Pound	500	510
	Reinforcement Bars, Epoxy Coated			Pound	7,760	7,900
	Drilled Shaft in Soil			Cu. Yd.	9.0	9.3
	Drilled Shaft in Rock			Cu. Yd.	2.8	2.8
	Concrete Sealer			Sq. Ft.	505	477

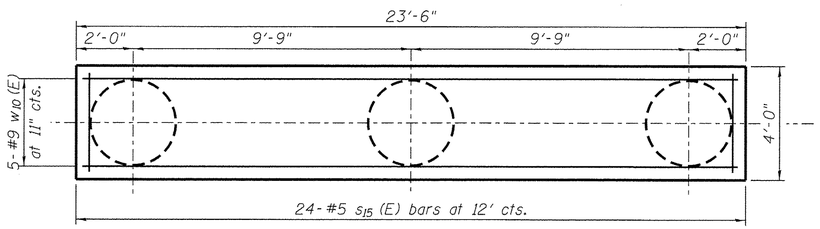

FOOTING PLAN

LEGEND:

* Length is Height of spiral.

** Provide 1½ extra turns top and bottom of each drilled shaft. Extend spiral 2" min. into Pier footing. Provide min. 4-#4 spacers or equivalent.

*** The quantities and detailing are based on the estimated elevations shown on the plans. The actual elevations may differ at each shaft and corresponding adjustments shall be made to the drilled shaft and reinforcement quantities and payment limits.

NOTES:

1. Anchor Bolt design and locations shall be per Truss Manufacturer. The Contractor shall place top cap reinforcement to miss anchor bolt locations. Cost of Anchor Bolts is included in cost of Pedestrian Truss Superstructure.
2. Concrete Sealer shall be applied to all surfaces of bridge Piers.
3. Seat elevations may change based on truss manufacturer's design drawings. Contractor shall verify elevations and dimensions prior to ordering materials.

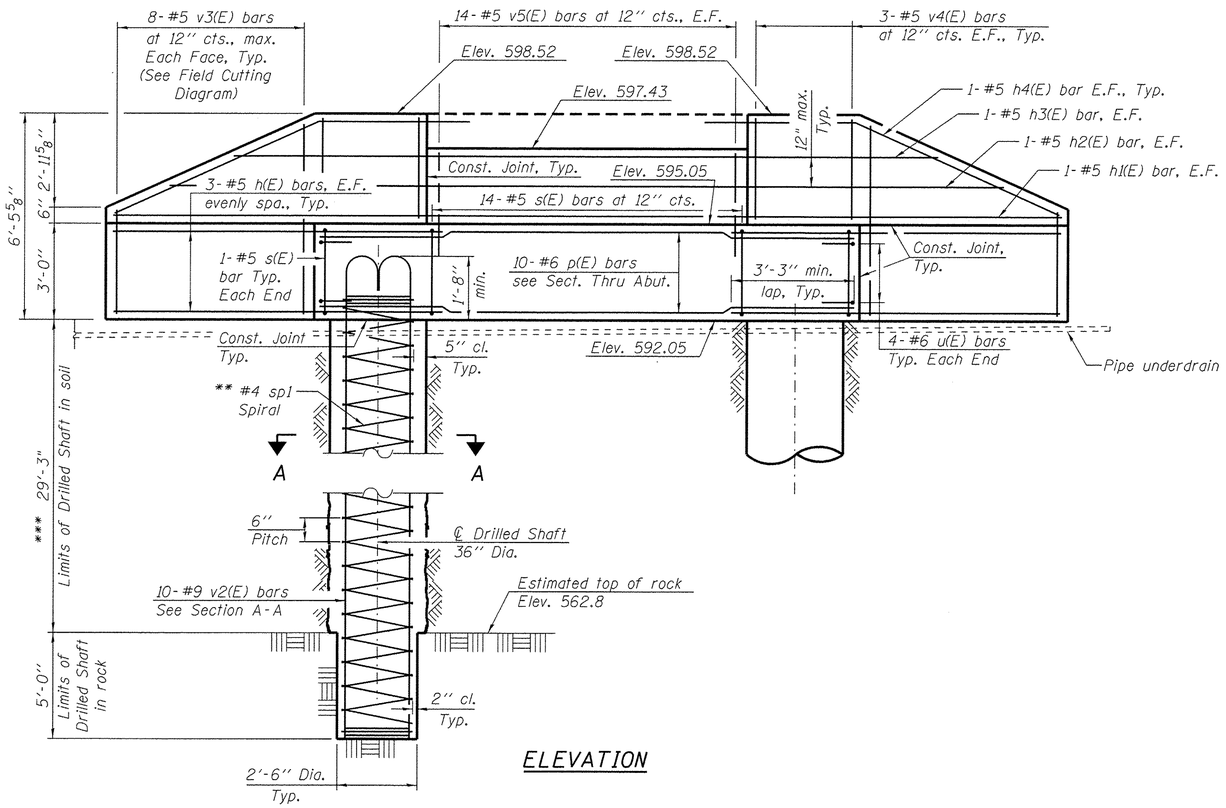

ELEVATION

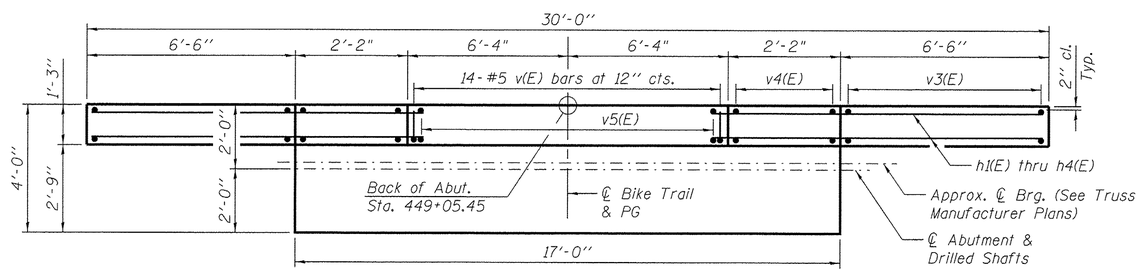

PLAN - BACKWALL

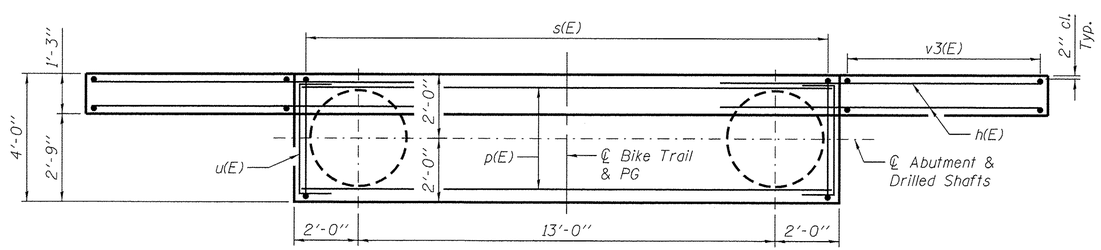

PLAN - ABUTMENT CAP

SOUTH ABUTMENT BILL OF MATERIAL

	Bar	No.	Size	Length	Shape
	h(E)	12	#5	9'-9"	
	h1(E)	2	#5	29'-8"	
	h2(E)	2	#5	26'-6"	
	h3(E)	2	#5	22'-1"	
	h4(E)	4	#5	9'-11"	
	p(E)	10	#6	16'-8"	
	s(E)	16	#5	13'-7"	
			#5		
*	sp1	2	#4	31'-9"	
	u(E)	8	#6	8'-6"	
	v(E)	14	#5	2'-8"	
	v2(E)	20	#9	37'-2"	
	v3(E)	16	#5	9'-3"	
	v4(E)	12	#5	4'-2"	
	v5(E)	28	#5	3'-2"	

Porous Granular Backfill	Cu. Yd.	27
Structure Excavation	Cu. Yd.	43
Concrete Structures	Cu. Yd.	12.7
Reinforcement Bars	Pound	660
Reinforcement Bars, Epoxy Coated	Pound	3,780
Drilled Shaft in Soil	Cu. Yd.	15.4
Drilled Shaft in Rock	Cu. Yd.	1.9
Concrete Sealer	Sq. Ft.	94
Geocomposite Wall Drain	Sq. Yd.	18
Pipe Underdrains for Structures 4"	Foot	44

NOTES:

1. For approach slab details see sheet S-3.
2. Anchor Bolt design and locations shall be per Truss Manufacturer. The Contractor shall place top cap reinforcement to miss anchor bolt locations. Cost of Anchor Bolts is included in cost of Pedestrian Truss Superstructure.
3. E.F. denotes each face.
4. Concrete Sealer shall be applied to the backwall, bearing seat and the exposed portion of the abutment cap.
5. See Sheet S-4 for bar bend details, field cutting diagram, Section Thru Abutment, Section A-A and Bearing Seat Elevations table.

LEGEND:

* Length is Height of spiral.

** Provide 1½ extra turns top and bottom of each drilled shaft. Extend spiral 2'' min. into abutment cap. Provide min. 4-#4 spacers or equivalent.

*** The quantities and detailing are based on the estimated elevations shown on the plans. The actual elevations may differ at each shaft and corresponding adjustments shall be made to the drilled shaft and reinforcement quantities and payment limits.

AECOM
303 East Wacker Drive, Suite 1400, Chicago, IL 60601
T 1-312-373-7700 F 1-312-373-6800

USER NAME =	DESIGNED - PSK	REVISED
	CHECKED - NPP	REVISED
PLOT SCALE =	DRAWN - PSK	REVISED
PLOT DATE = 8/4/2016	CHECKED - NPP	REVISED

STATE OF ILLINOIS
DEPARTMENT OF TRANSPORTATION

SOUTH ABUTMENT DETAILS

SHEET NO. S-6 OF S-8 SHEETS

SECTION	COUNTY	TOTAL SHEETS	SHEET NO.
08-00178-02-BT	COOK	64	34
	CONTRACT NO. 61C12		
	ILLINOIS FED. AID PROJECT		

BORING LOG NO. B-1

AGI Job No. 11-179 | Sheet 1 of 1

CLIENT: URS | PROJECT: Bridge over Calumet-Sag Channel

STATION AND OFFSET(ft): 446+20.9, 55 Rt. | LOCATION: Sag Greenway Bike Trail

COUNTY: Cook

CITY & STATE: Riverdale, Illinois

SURFACE ELEVATION Datum: USGS 582.5

Depth (ft)	Elevation	Description
0.3	582.3	Topsoil, silty sandy clay with roots, black
		Clay Loam, brown, stiff
3.5	579.0	Silty Clay, trace sand & gravel, brown-gray, very stiff to stiff
7.5	575.0	Clay Loam, trace fine gravel, gray, stiff
10.0	572.5	Loam, trace gravel, gray, hard
15.0	567.5	Silt, with fractured limestone, extremely dense
20.0	562.5	Fractured Limestone, tr. silt, gray, very dry, spoon refusal at 24 feet
24.0	558.5	End Of Boring
		Refusal on Bedrock

SAMPLES				TESTS				
SPT-N BLOWS / FT.	NUMBER	TYPE	% RECOVERY	MOISTURE, %	HNu Units ppm	Qu tsf Failure Type	DRY DENSITY PCF	Est. Coefficient of Permeability k, (cm/sec)
7	1	SS	67					
8	2	SS	67	23		2.8		
11	3	SS	94	22		1.9		
15	4	SS	89	18		1.6		
28	5	SS	83	11		5.5		
22	6	SS	100	12		6.4		
80	7	SS	44	7				
100	8	SS	5	2				

WATER LEVEL OBSERVATIONS: WL ▽ Dry; WL ▼; WL ▽

Applied GeoScience, Inc.
2385 Hammond Drive, Suite 6
Schaumburg, Illinois 60173
Tel: (847) 303-0300
Fax: (847) 303-0900

STARTED	1-23-12	FINISHED	1-23-12
DRILL CO.	K&S	DRILL RIG	ATV
DRILLER	Ruben	ASS'T DRILLER	Carlos
ENG/GEOL.	Katie	APPROVED	AM

AGI 11-197 URS RIVERDALE BIKE.GPJ 2/4/12

BORING LOG NO. B-2

AGI Job No. 11-179 | Sheet 1 of 1

CLIENT: URS | PROJECT: Bridge over Calumet-Sag Channel

STATION AND OFFSET(ft): 446+72.4, 18.7 Rt. | LOCATION: Sag Greenway Bike Trail

COUNTY: Cook

CITY & STATE: Riverdale, Illinois

SURFACE ELEVATION Datum: USGS 578.8

Depth (ft)	Elevation	Description
1.0	577.8	Organic Clay, brown, trace roots, very moist
		Silty Clay, trace sand & gravel, gray, medium stiff
8.0	570.8	Silty Clay, some sand & gravel, gray, very stiff
10.0	568.8	Clay Loam, trace gravel, gray, very stiff
13.0	565.8	Silt, with fractured limestone, extremely dense, spoon refusal on bedrock
14.0	564.8	End Of Boring
		Refusal on Bedrock

SAMPLES				TESTS				
SPT-N BLOWS / FT.	NUMBER	TYPE	% RECOVERY	MOISTURE, %	HNu Units ppm	Qu tsf Failure Type	DRY DENSITY PCF	Est. Coefficient of Permeability k, (cm/sec)
10	1	SS	67	35				
4	2	SS	100	22				
6	3	SS	94	21		0.65		
12	4	SS	72	15		2.1		
27	5	SS	28	21		2.6		
83	6	SS	8	12				

WATER LEVEL OBSERVATIONS: WL ▽ Dry; WL ▼; WL ▽

Applied GeoScience, Inc.
2385 Hammond Drive, Suite 6
Schaumburg, Illinois 60173
Tel: (847) 303-0300
Fax: (847) 303-0900

STARTED	1-23-12	FINISHED	1-23-12
DRILL CO.	K&S	DRILL RIG	ATV
DRILLER	Ruben	ASS'T DRILLER	Carlos
ENG/GEOL.	Katie	APPROVED	AM

AGI 11-197 URS RIVERDALE BIKE.GPJ 2/4/12

BORING LOG NO. B-3

AGI Job No. 11-179 | Sheet 1 of 1

CLIENT: URS | PROJECT: Bridge over Calumet-Sag Channel

STATION AND OFFSET(ft): 448+87.4, 11 Rt. | LOCATION: Sag Greenway Bike Trail

COUNTY: Cook

CITY & STATE: Riverdale, Illinois

SURFACE ELEVATION Datum: USGS 581.0

Description	Elevation	SPT-N BLOWS / FT.	NUMBER	TYPE	% RECOVERY	MOISTURE, %	HNu Units ppm	Qu tsf Failure Type	DRY DENSITY PCF	Est. Coefficient of Permeability k, (cm/sec)
Topsoil, silty sandy clay, black (1.3)	579.8									
Clay with Organic, brown-gray, soft, moist (3.0)	578.0	4	1	SS	78	29		0.6		
Silty Clay, trace sand & gravel, gray, very stiff to stiff (8.5)	572.5	8	2	SS	67	18		2.2		
		7	3	SS	89	23		1.4		
Clay Loam, some gravel, gray, stiff to very stiff (12.5)	568.5	17	4	SS	61	15		1.8		
		23	5	SS	72	13		3.9		
Silt Loam & Gravel, with fractured limestone, gray, very hard (15.0)	566.0	57	6	SS	100	11		6.4		
Fractured Limestone, Auger refusal on bedrock (15.5)	565.5			PA						

End Of Boring

Refusal on Bedrock

WATER LEVEL OBSERVATIONS		
WL	▽	Dry
WL	▼	
WL	▽	

Applied GeoScience, Inc.
2385 Hammond Drive, Suite 6
Schaumburg, Illinois 60173
Tel: (847) 303-0300
Fax: (847) 303-0900

STARTED	1-24-12	FINISHED	1-24-12
DRILL CO.	K&S	DRILL RIG	ATV
DRILLER	Ruben	ASS'T DRILLER	Carlos
ENG/GEOL.	Katie	APPROVED	AM

AGI 11-197 URS RIVERDALE BIKE.GPJ 2/4/12

BORING LOG NO. B-4

AGI Job No. 11-179 | Sheet 1 of 1

CLIENT: URS | PROJECT: Bridge over Calumet-Sag Channel

STATION AND OFFSET(ft): 449+01.7, 3.6 Rt. | LOCATION: Sag Greenway Bike Trail

COUNTY: Cook

CITY & STATE: Riverdale, Illinois

SURFACE ELEVATION Datum: USGS 584.8

Description	Elevation	SPT-N BLOWS / FT.	NUMBER	TYPE	% RECOVERY	MOISTURE, %	HNu Units ppm	Qu tsf Failure Type	DRY DENSITY PCF	Est. Coefficient of Permeability k, (cm/sec)
Topsoil, silty sandy clay, black (1.3)	583.6									
Sand Loam, some fine gravel, brown-gray, moist, medium dense (3.5)	581.3	7	1	SS	78	20				
Silty Clay, with shale, gray, soft to medium stiff (10.0)	574.8	4	2	SS	56	19		0.45		
		2	3	SS	67	21		0.47		
		5	4	SS	83	23		0.52		
Silty Clay, with shale & fine gravel, gray, stiff (13.5)	571.3	12	5	SS	83	14		1.8		
Clay Loam, with gravel, gray, very stiff to hard (19.5)	565.3	23	6	SS	64	13		2.9		
		97	7	SS	89	11		6.7		
Fractured Limestone, Auger refusal on bedrock (22.0)	562.8			PA						

End Of Boring

Refusal on Bedrock

WATER LEVEL OBSERVATIONS		
WL	▽	Dry
WL	▼	
WL	▽	

Applied GeoScience, Inc.
2385 Hammond Drive, Suite 6
Schaumburg, Illinois 60173
Tel: (847) 303-0300
Fax: (847) 303-0900

STARTED	1-24-12	FINISHED	1-24-12
DRILL CO.	K&S	DRILL RIG	ATV
DRILLER	Ruben	ASS'T DRILLER	Carlos
ENG/GEOL.	Katie	APPROVED	AM

AGI 11-197 URS RIVERDALE BIKE.GPJ 2/4/12

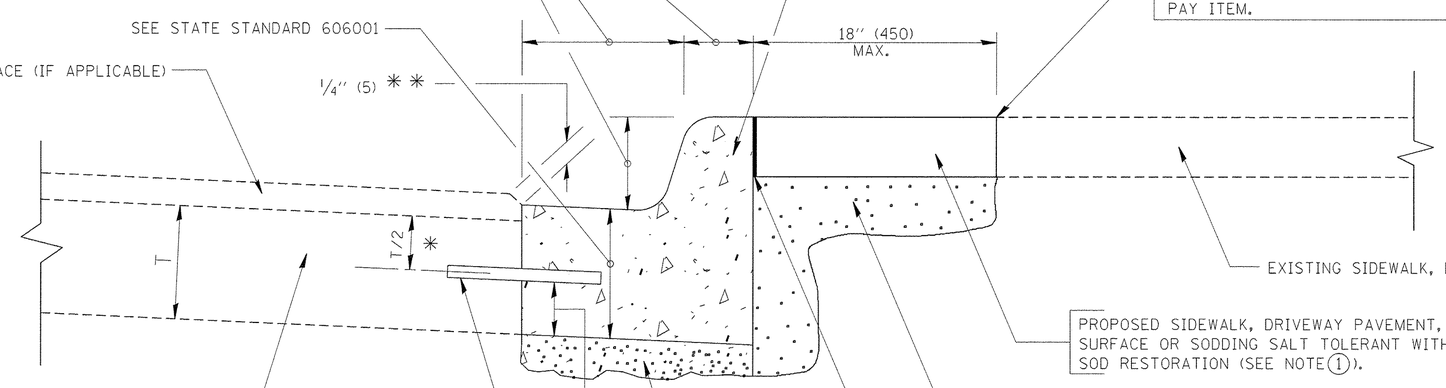

* 3" (75) MINIMUM FROM TOP AND BOTTOM OF THE CONCRETE PAVEMENT OR BASE COURSE.

* * IF THE FINAL SURFACE OF THE PAVEMENT IS CONCRETE, THE GUTTER IS TO BE FLUSH WITH THE PAVEMENT.

NOTE: (1) SIDEWALK, DRIVEWAY PAVEMENT OR MEDIAN SURFACE SHALL BE SIMILAR TO THE MATERIAL BEING REMOVED AND WILL BE PAID FOR SEPARATELY.

SODDING, SALT TOLERANT AND TOP SOIL, FURNISH AND PLACE 4" WILL BE PAID FOR SEPARATELY,

(2) FERTILIZER FOR THE PLACEMENT OF THE SOD IS NOT REQUIRED

(3) CURB OR CURB AND GUTTER REPLACEMENT SHALL MATCH THE SHAPE OF THE EXISTING CURB OR CURB AND GUTTER UNLESS OTHERWISE SPECIFIED.

(4) FOR CURB OR CURB AND GUTTER REMOVAL AND REPLACEMENT ADJACENT TO FLEXIBLE PAVEMENT DELETE EPOXY COATED TIE BARS.

(5) LONGITUDINAL BARS, IF ENCOUNTERED IN THE EXISTING CURB OR CURB AND GUTTER, ARE NOT TO BE REPLACED. CUTTING AND REMOVING LONGITUDINAL BARS SHALL BE INCLUDED IN THE COST OF CURB OR CURB AND GUTTER REMOVAL AND REPLACEMENT.

(6) THE COST OF HMA SURFACE REMOVAL IN THE EXISTING GUTTER FLAG SHALL BE INCLUDED IN THE COST OF THE CURB AND GUTTER REMOVAL AND REPLACEMENT.

(7) THE REMOVAL AND REPLACEMENT OF THE EXISTING CURB OR CURB AND GUTTER SHALL BE DONE IN ACCORDANCE WITH THE APPLICABLE PORTIONS OF SECTION 440 AND 606 OF THE STANDARD SPECIFICATIONS.

(8) THE LOCATIONS OF REMOVAL AND REPLACEMENT OF EXISTING CURB OR CURB AND GUTTER SHALL BE DETERMINED BY THE RESIDENT ENGINEER AT THE TIME OF CONSTRUCTION.

BASIS OF PAYMENT:

THIS WORK WILL BE PAID FOR AT THE CONTRACT UNIT PRICE PER FOOT (METER) FOR "CURB REMOVAL AND REPLACEMENT" OR "COMBINATION CONCRETE CURB AND GUTTER REMOVAL AND REPLACEMENT".

CURB OR CURB AND GUTTER REMOVAL AND REPLACEMENT

ALL DIMENSIONS ARE IN INCHES (MILLIMETERS) UNLESS OTHERWISE SHOWN.

FILE NAME = c:\pw_work\pwidot\drivakosgn\d0108315\bd24.dgn	USER NAME = drivakosgn	DESIGNED - A. HOUSEH	REVISED - R. SHAH 10-03-96	STATE OF ILLINOIS DEPARTMENT OF TRANSPORTATION	CURB OR CURB AND GUTTER REMOVAL AND REPLACEMENT	F.A. RTE.	SECTION	COUNTY	TOTAL SHEETS / SHEET NO.
	PLOT SCALE = 50.000 ' / IN.	DRAWN -	REVISED - A. ABBAS 03-21-97				08-00178-02-BT	COOK	64 / 37
	PLOT SCALE = 50.000 ' / IN.	CHECKED -	REVISED - M. GOMEZ 01-22-01				BD600-06 (BD-24)	CONTRACT NO. 61C12	
	PLOT DATE = 12/15/2009	DATE - 03-11-94	REVISED - R. BORO 12-15-09		SCALE: NONE / SHEET NO. 1 OF 1 SHEETS / STA. / TO STA.	FED. ROAD DIST. NO. 1	ILLINOIS	FED. AID PROJECT	

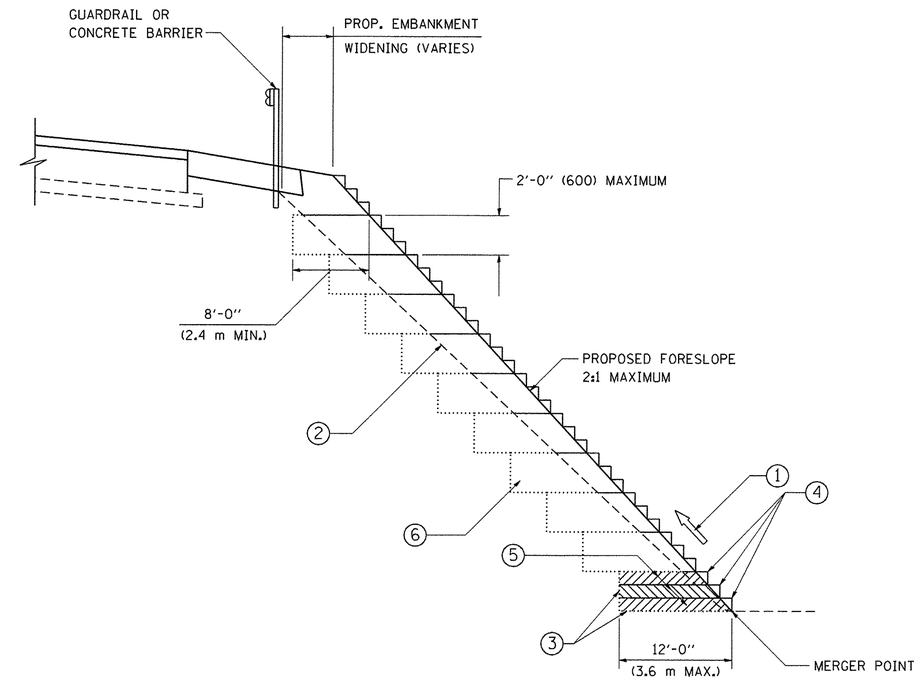

TYPICAL BENCHING DETAIL FOR EMBANKMENT

NOTES:

1. CONSTRUCT SUCCEEDING BENCH CUTS AND EMBANKMENT PLACEMENT AND COMPACTION FROM BOTTOM TO TOP IN STAIRSTEP FASHION.
2. EXISTING FORESLOPE PREPARED IN ACCORDANCE WITH ARTICLE 205.03 OF THE STANDARD SPECIFICATIONS.
3. BENCH CUT EXISTING SLOPE TYPICAL FOR EACH STEP.
4. TRIM TO FINAL SLOPE.
5. EQUAL 8-INCH (200) LIFTS OF EMBANKMENT COMPACTED IN ACCORDANCE WITH ARTICLE 205.05 OF THE STANDARD SPECIFICATIONS.
6. EXCAVATION OF BENCH CUTS WITHIN EXISTING EMBANKMENT WILL BE PAID FOR AT THE CONTRACT UNIT PRICE PER CUBIC METER OR CUBIC YARD FOR "EARTH EXCAVATION". THIS PRICE WILL INCLUDE ALL LABOR AND MATERIAL. NO ADDITIONAL COMPENSATION WILL BE ALLOWED.
7. SLOPES SHALL BE BENCHED ACCORDING TO THIS DETAIL WHEN THE SLOPE IS STEEPER THAN 4:1 AND THE HEIGHT IS GREATER THAN 5' (1.5 m).

ALL DIMENSIONS ARE IN INCHES (MILLIMETERS) UNLESS OTHERWISE SHOWN.

FILE NAME = W:\diststd\22x34\bd51.dgn	USER NAME = gaglionobt	DESIGNED -	REVISED -
		DRAWN - CADD	REVISED -
	PLOT SCALE = 50.0000 ' / IN.	CHECKED - S.E.B.	REVISED -
	PLOT DATE = 1/4/2008	DATE - 06-16-04	REVISED -

STATE OF ILLINOIS
DEPARTMENT OF TRANSPORTATION

BENCHING DETAIL
FOR EMBANKMENT WIDENING

SCALE: NONE | SHEET NO. 1 OF 1 SHEETS | STA. | TO STA.

F.A.U. RTE.	SECTION	COUNTY	TOTAL SHEETS	SHEET NO.
	08-00178-02-BT	COOK	64	38
	BD-51	CONTRACT NO. 61C12		
FED. ROAD DIST. NO. 1	ILLINOIS	FED. AID PROJECT		

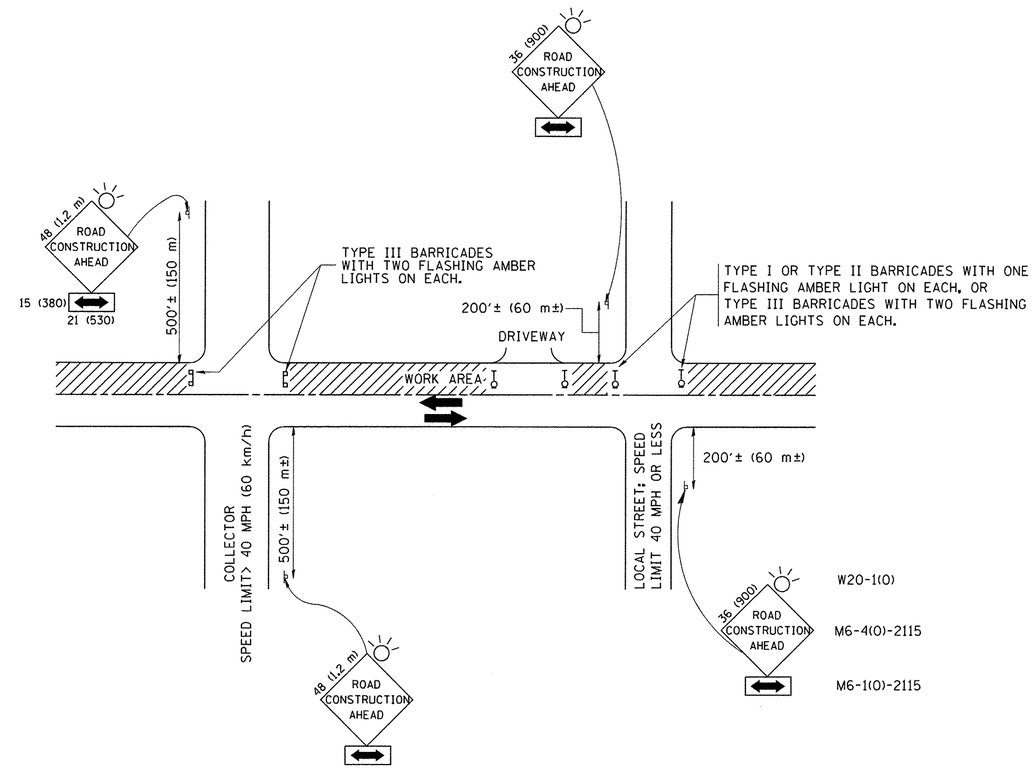

TRAFFIC CONTROL AND PROTECTION FOR SIDE ROADS, INTERSECTIONS, AND DRIVEWAYS

NOTES:

A. FOR NO LANE RESTRICTION ON THE SIDE ROAD OR DRIVEWAYS

1. SIDE ROAD WITH A SPEED LIMIT OF 40 MPH (60 km/h) OR LESS AS SHOWN ON THE DRAWING AND AS DIRECTED BY THE ENGINEER:

   a) ONE **ROAD CONSTRUCTION AHEAD** SIGN 36 x 36 (900x900) WITH A FLASHER AND FLAG MOUNTED ON IT APPROXIMATELY 200' (60 m) IN ADVANCE OF THE MAIN ROUTE.

   b) THE CLOSED PORTION OF THE MAIN ROUTE SHALL BE PROTECTED BY BLOCKING WITH TYPE I, TYPE II OR TYPE III BARRICADES, 1/3 OF THE CROSS SECTION OF THE CLOSED PORTION.

2. SIDE ROAD WITH A SPEED LIMIT GREATER THAN 40 MPH (60 km/h) AS SHOWN ON THE DRAWING AND AS DIRECTED BY THE ENGINEER:

   a) ONE **ROAD CONSTRUCTION AHEAD** SIGN 48 x 48 (1.2 m x 1.2 m) WITH A FLASHER MOUNTED ON IT APPROXIMATELY 500' (150 m) IN ADVANCE OF THE MAIN ROUTE.

   b) THE CLOSED PORTION OF THE MAIN ROUTE SHALL BE PROTECTED BY BLOCKING WITH TYPE III BARRICADES, 1/2 OF THE CROSS SECTION OF THE CLOSED PORTION.

3. WHEN THE SIDE ROAD LIES BETWEEN THE BEGINNING OF THE MAINLINE SIGNING AND THE WORK ZONE, A SINGLE HEADED ARROW (M6-1) SHALL BE USED IN LIEU OF THE DOUBLE HEADED ARROW (M6-4).

B. FOR A LANE CLOSURE ON A SIDE ROAD OR DRIVEWAY:

USE APPLICABLE PORTIONS OF THE TYPICAL APPLICATION OF TRAFFIC CONTROL DEVICES (STD. 701501, STD. 701606 OR THE APPROPRIATE STANDARD). THE SPACING OF SIGNS AND BARRICADES SHALL BE ADJUSTED FOR FIELD CONDITIONS AS DIRECTED BY THE ENGINEER. THE DIRECTIONAL ARROW SHALL BE COVERED OR REMOVED WHEN NO LONGER CONSISTENT WITH THE SIDE ROAD LANE CLOSURE.

C. ADVANCE WARNING SIGNS ARE TO BE OMITTED ON DRIVEWAY UNLESS OTHERWISE NOTED.

D. THE TRAFFIC CONTROL AND PROTECTION FOR SIDE ROADS, INTERSECTIONS, AND DRIVEWAYS SHALL BE INCIDENTAL TO THE COST OF SPECIFIED TRAFFIC CONTROL STANDARDS OR ITEMS.

All dimensions are in millimeters (inches) unless otherwise shown.

FILE NAME = W:\diststd\22x34\tc10.dgn	USER NAME = geglianobt	DESIGNED - LHA	REVISED - J. OBERLE 10-18-95	STATE OF ILLINOIS DEPARTMENT OF TRANSPORTATION	TRAFFIC CONTROL AND PROTECTION FOR SIDE ROADS, INTERSECTIONS, AND DRIVEWAYS			F.A. RTE.	SECTION	COUNTY	TOTAL SHEETS	SHEET NO.
		DRAWN -	REVISED - A. HOUSEH 03-06-96						08-00178-02-BT	COOK	64	39
	PLOT SCALE = 50.000 ' / IN.	CHECKED -	REVISED - A. HOUSEH 10-15-96						TC-10	CONTRACT NO. 61C12		
	PLOT DATE = 1/4/2008	DATE - 06-89	REVISED -T. RAMMACHER 01-06-00		SCALE: NONE	SHEET NO. 1 OF 1 SHEETS	STA. TO STA.	FED. ROAD DIST. NO. 1	ILLINOIS	FED. AID PROJECT		

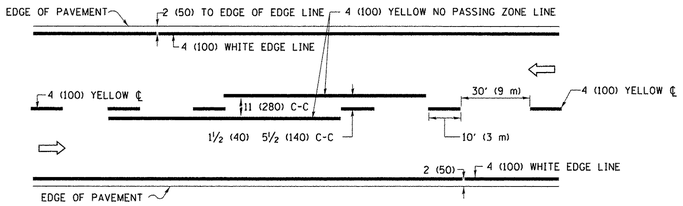

2-LANE ROADWAY

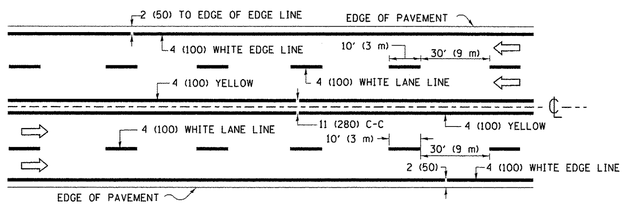

MULTI-LANE UNDIVIDED

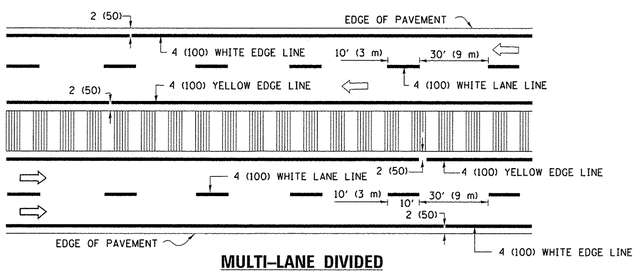

MULTI-LANE DIVIDED

WITH MEDIAN

TYPICAL LANE AND EDGE LINE MARKING

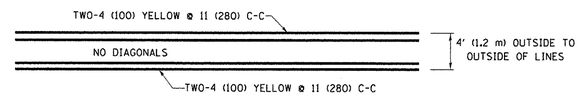

4' (1.2 m) WIDE MEDIANS ONLY

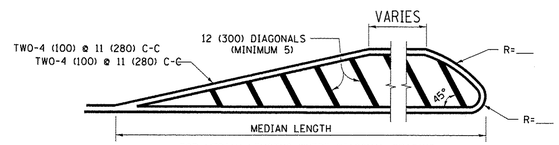

FOR MEDIAN LENGTHS WHERE DIAGONAL SPACING CANNOT BE ATTAINED, USE 5 (FIVE) EQUALLY SPACED DIAGONAL LINES.

DIAGONAL LINE SPACING: 50' (15 m) C-C (LESS THAN 30MPH (50 km/h))
75' (25 m) C-C 30MPH (50 km/h) TO 45MPH (70 km/h))
150' (45 m) C-C (MORE THAN 45MPH (70 km/h))

MEDIANS OVER 4' (1.2 m) WIDE

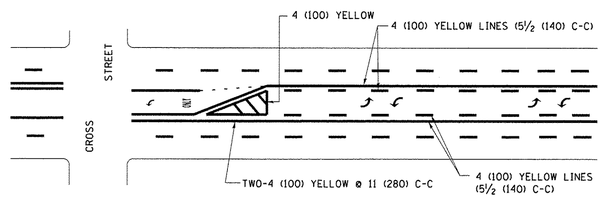

A MINIMUM OF TWO PAIRS OF TURN ARROWS SHALL BE USED, WHITE IN COLOR. ADDITIONAL PAIRS SHALL BE PLACED AT 200' (60 m) TO 300' (90 m) INTERVALS.

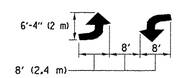

MEDIAN WITH TWO-WAY LEFT TURN LANE

TYPICAL PAINTED MEDIAN MARKING

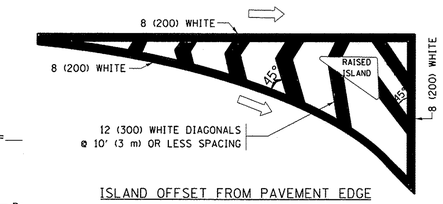

ISLAND OFFSET FROM PAVEMENT EDGE

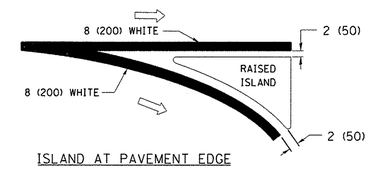

ISLAND AT PAVEMENT EDGE

TYPICAL ISLAND MARKING

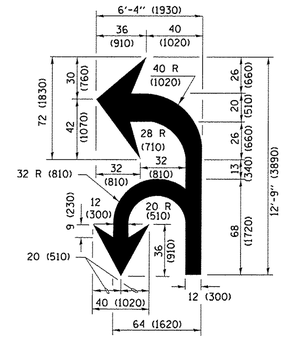

COMBINATION LEFT AND U-TURN

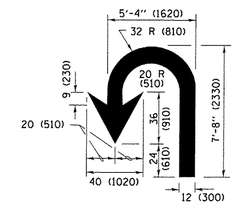

U-TURN

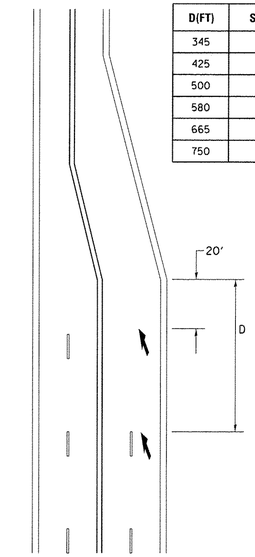

D(FT)	SPEED LIMIT
345	30
425	35
500	40
580	45
665	50
750	55

LANE REDUCTION TRANSITION

✳ LANE REDUCTION ARROWS REQUIRED AT SPEEDS OF 45 MPH OR GREATER OR WHEN SPECIFIED IN PLANS.

TYPE OF MARKING	WIDTH OF LINE	PATTERN	COLOR	SPACING /REMARKS
CENTERLINE ON 2 LANE PAVEMENT	4 (100)	SKIP-DASH	YELLOW	10' (3 m) LINE WITH 30' (9 m) SPACE
CENTERLINE ON MULTI-LANE UNDIVIDED PAVEMENT	2 @ 4 (100)	SOLID	YELLOW	11 (280) C-C
NO PASSING ZONE LINES: FOR ONE DIRECTION FOR BOTH DIRECTIONS	 4 (100) 2 @ 4 (100)	 SOLID SOLID	 YELLOW YELLOW	 5½ (140) C-C FROM SKIP-DASH CENTERLINE 11 (280) C-C OMIT SKIP-DASH CENTERLINE BETWEEN
LANE LINES	4 (100) 5 (125) ON FREEWAYS	SKIP-DASH SKIP-DASH	WHITE WHITE	10' (3 m) LINE WITH 30' (9 m) SPACE
DOTTED LINES (EXTENSIONS OF CENTER, LANE OR TURN LANE MARKINGS)	SAME AS LINE BEING EXTENDED	SKIP-DASH	SAME AS LINE BEING EXTENDED	2' (600) LINE WITH 6' (1.8 m) SPACE
EDGE LINES	4 (100)	SOLID	YELLOW-LEFT WHITE-RIGHT	OUTLINE MEDIANS IN YELLOW
TURN LANE MARKINGS	6 (150) LINE; FULL SIZE LETTERS & SYMBOLS (8' (2.4m))	SOLID	WHITE	SEE TYPICAL TURN LANE MARKING DETAIL
TWO WAY LEFT TURN MARKING	2 @ 4 (100) EACH DIRECTION 8' (2.4m) LEFT ARROW	SKIP-DASH AND SOLID IN PAIRS	YELLOW WHITE	10' (3 m) LINE WITH 30' (9 m) SPACE FOR SKIP-DASH; 5½ (140) C-C BETWEEN SOLID LINE AND SKIP-DASH LINE SEE TYPICAL TWO-WAY LEFT TURN MARKING DETAIL
CROSSWALK LINES (PEDESTRIAN) A. DIAGONALS (BIKE & EQUESTRIAN) B. LONGITUDINAL BARS (SCHOOL)	2 @ 6 (150) 12 (300) @ 45° 12 (300) @ 90°	SOLID SOLID SOLID	WHITE WHITE WHITE	NOT LESS THAN 6' (1.8 m) APART 2' (600) APART 2' (600) APART SEE TYPICAL CROSSWALK MARKING DETAILS.
STOP LINES	24 (600)	SOLID	WHITE	PLACE 4' (1.2 m) IN ADVANCE OF AND PARALLEL TO CROSSWALK, IF PRESENT. OTHERWISE, PLACE AT DESIRED STOPPING POINT, PARALLEL TO CROSSROAD CENTERLINE, WHERE POSSIBLE
PAINTED MEDIANS	2 @ 4 (100) WITH 12 (300) DIAGONALS @ 45° NO DIAGONALS USED FOR 4' (1.2 m) WIDE MEDIANS	SOLID	YELLOW: TWO WAY TRAFFIC WHITE: ONE WAY TRAFFIC	11 (280) C-C FOR THE DOUBLE LINE SEE TYPICAL PAINTED MEDIAN MARKING.
GORE MARKING AND CHANNELIZING LINES	8 (200) WITH 12 (300) DIAGONALS @ 45°	SOLID	WHITE	DIAGONALS: 15' (4.5 m) C-C (LESS THAN 30MPH (50 km/h)) 20' (6 m) C-C 30MPH (50 km/h) TO 45MPH (70 km/h)) 30' (9 m) C-C (OVER 45MPH (70 km/h))
RAILROAD CROSSING	24 (600) TRANSVERSE LINES; "RR" IS 6' (1.8 m) LETTERS; 16 (400) LINE FOR "X"	SOLID	WHITE	SEE STATE STANDARD 780001 AREA OF: "R"=3.6 SQ. FT. (0.33 m^2) EACH "X"=54.0 SQ. FT. (5.0 m^2)
SHOULDER DIAGONALS (REQUIRED FOR SHOULDERS ≥ 8')	12 (300) @ 45°	SOLID	WHITE - RIGHT YELLOW - LEFT	50' (15 m) C-C (LESS THAN 30MPH (50 km/h)) 75' (25 m) C-C (30 MPH (50 km/h) TO 45MPH (70 km/h)) 150' (45 m) C-C (OVER 45MPH (70 km/h))
U TURN ARROW	SEE DETAIL	SOLID	WHITE	16.3 SF
2 ARROW COMBINATION LEFT AND U TURN	SEE DETAIL	SOLID	WHITE	30.4 SF

FOR FURTHER DETAILS ON PAVEMENT MARKING REFER TO STANDARD SPECIFICATIONS FOR ROAD AND BRIDGE CONSTRUCTION AND STATE STANDARD 780001.

All dimensions are in inches (millimeters) unless otherwise shown.

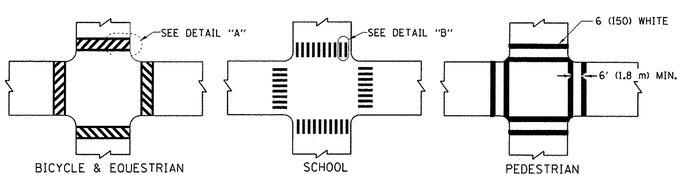

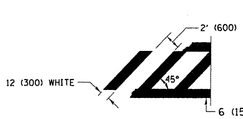

DETAIL "A"

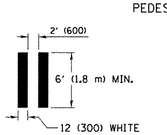

DETAIL "B"

TYPICAL CROSSWALK MARKING

✳ MARKINGS SHALL BE INSTALLED PARALLEL TO THE CENTERLINE OF THE ROAD WHICH IT CROSSES

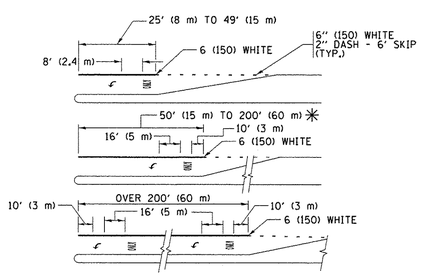

FULL SIZE LETTERS 8' (2.4 m) AND ARROWS SHALL BE USED.
↰ AREA = 15.6 SQ. FT. (1.5 m^2) ONLY AREA = 20.8 SQ. FT. (1.9 m^2)

✳ TURN LANES IN EXCESS OF 400' (120 m) IN LENGTH MAY HAVE AN ADDITIONAL SET OF ARROW - "ONLY" INSTALLED MIDWAY BETWEEN THE OTHER TWO SETS OF ARROW - "ONLY".

TYPICAL LEFT (OR RIGHT) TURN LANE

TYPICAL TURN LANE MARKING

FILE NAME = pw:\\IL084EBIDINTEG.illinois.gov:PWIDOT\Documents\IDOT Offices\District 1\Projects\District\CADData\CADsheets\tc13.dgn	USER NAME = footemj	DESIGNED - EVERS	REVISED - C. JUCIUS 09-09-09
		DRAWN -	REVISED - C. JUCIUS 07-01-13
	PLOT SCALE = 50.000 ' / in.	CHECKED -	REVISED - C. JUCIUS 12-21-15
Default	PLOT DATE = 4/13/2016	DATE - 03-19-90	REVISED - C. JUCIUS 04-12-16

STATE OF ILLINOIS
DEPARTMENT OF TRANSPORTATION

DISTRICT ONE
TYPICAL PAVEMENT MARKINGS

SCALE: NONE | SHEET 1 OF 1 SHEETS | STA. TO STA.

F.A. RTE.	SECTION	COUNTY	TOTAL SHEETS	SHEET NO.
	08-00178-02-BT	COOK	64	40
	TC-13	CONTRACT NO. 61C12		
	ILLINOIS FED. AID PROJECT			

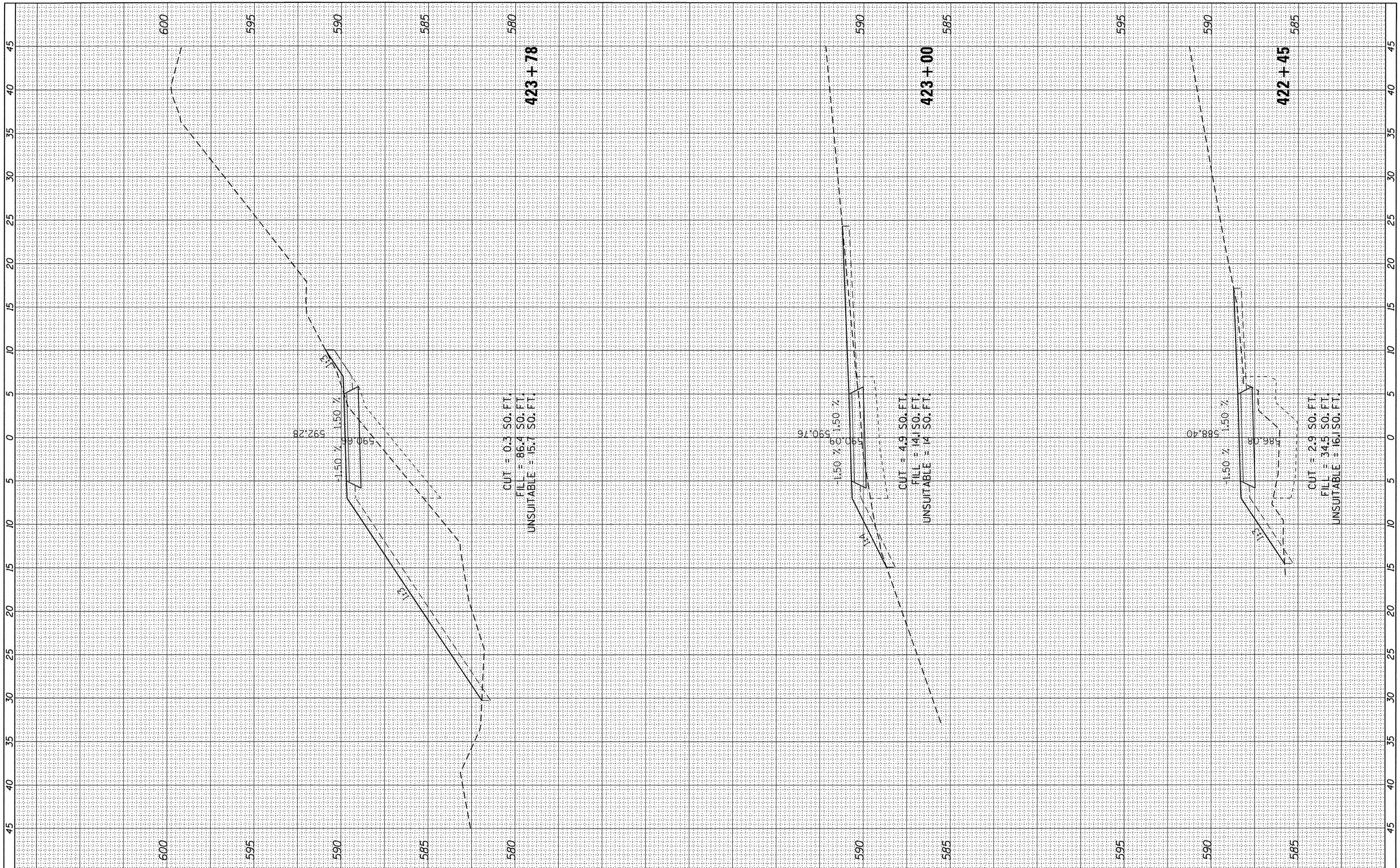

FINAL SURVEY		BY	DATE
NOTE BOOK NO.	SURVEYED		
	PLOTTED		
	TEMPLATE		
	AREAS		
	AREAS CHECKED		

ORIGINAL SURVEY		BY	DATE
NOTE BOOK NO.	SURVEYED		
	PLOTTED		
	TEMPLATE		
	AREAS		
	AREAS CHECKED		

AECOM
303 East Wacker Drive, Suite 1400, Chicago, IL 60601
T 1-312-373-7700 F 1-312-373-6800

USER NAME = ken_moy	DESIGNED - KLM	REVISED -
	DRAWN - KJB	REVISED -
PLOT SCALE = 5.0000 ' / in.	CHECKED - BMC	REVISED -
PLOT DATE = 8/4/2016	DATE - AUGUST 5, 2016	REVISED -

STATE OF ILLINOIS
DEPARTMENT OF TRANSPORTATION

CAL-SAG GREENWAY TRAIL (BLUE ISLAND EAST SEGMENT)
CROSS SECTIONS / BLUE ISLAND EAST

SCALE: | SHEET OF SHEETS | STA. 422+45 TO STA. 423+78

F.A. RTE.	SECTION	COUNTY	TOTAL SHEETS	SHEET NO.
	08-00178-00-BT	COOK	64	41
		CONTRACT NO. 61C12		
		ILLINOIS	FED. AID PROJECT	

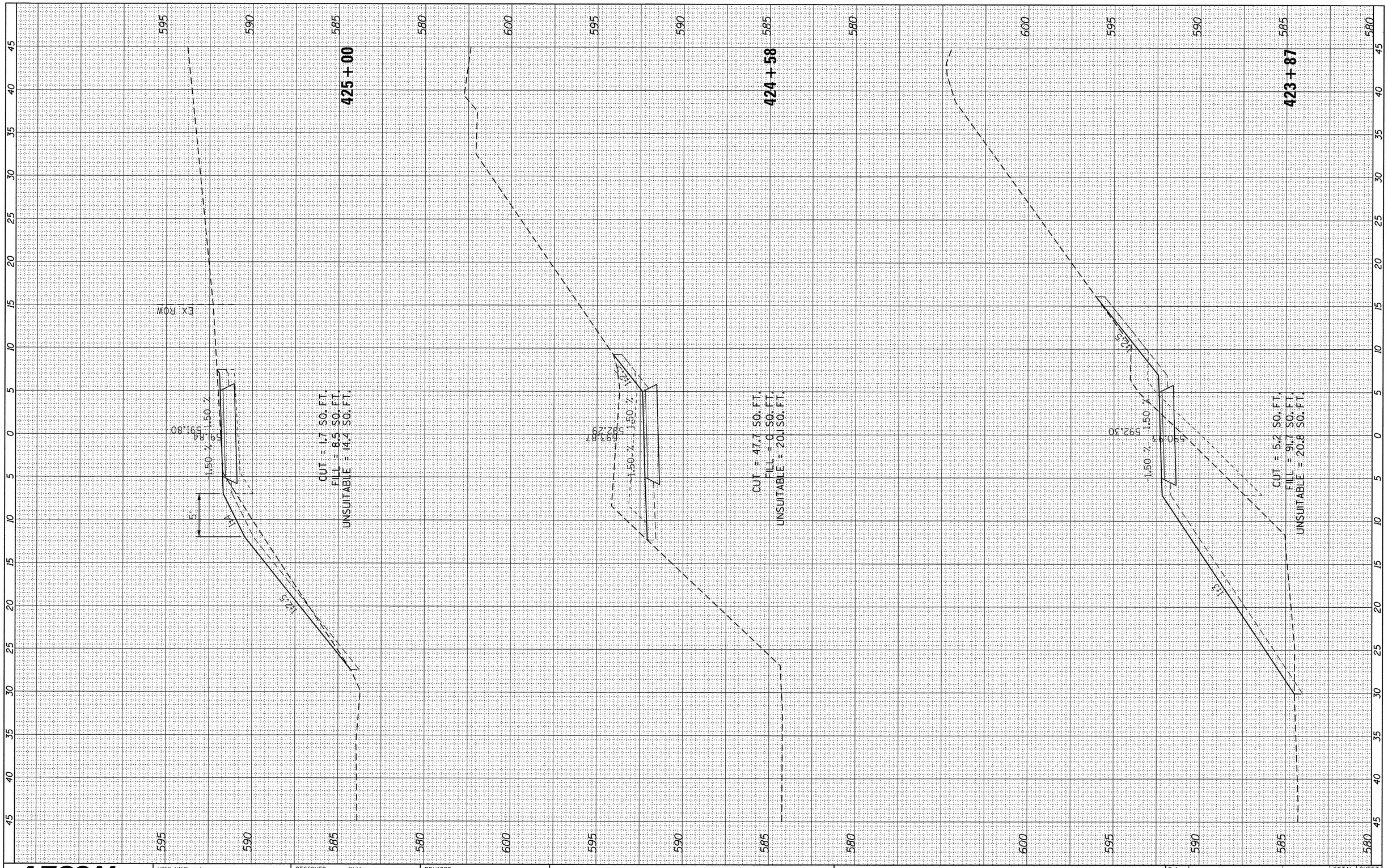

FINAL SURVEY		BY	DATE
NOTE BOOK	SURVEYED		
	PLOTTED		
	TEMPLATE		
	AREAS		
NO.	AREAS CHECKED		

ORIGINAL SURVEY		BY	DATE
NOTE BOOK	SURVEYED		
	PLOTTED		
	TEMPLATE		
	AREAS		
NO.	AREAS CHECKED		

AECOM
303 East Wacker Drive, Suite 1400, Chicago, IL 60601
T 1-312-373-7700 F 1-312-373-6800

USER NAME = ken_moy	DESIGNED - KLM	REVISED -
	DRAWN - KJB	REVISED -
PLOT SCALE = 5.0000 ' / in.	CHECKED - BMC	REVISED -
PLOT DATE = 8/4/2016	DATE - AUGUST 5, 2016	REVISED -

STATE OF ILLINOIS
DEPARTMENT OF TRANSPORTATION

CAL-SAG GREENWAY TRAIL (BLUE ISLAND EAST SEGMENT)
CROSS SECTIONS / BLUE ISLAND EAST

SCALE: | SHEET OF SHEETS | STA. 423+87 TO STA. 425+00

F.A. RTE.	SECTION	COUNTY	TOTAL SHEETS	SHEET NO.
	08-00178-00-BT	COOK	64	42
		CONTRACT NO. 61C12		
		ILLINOIS FED. AID PROJECT		

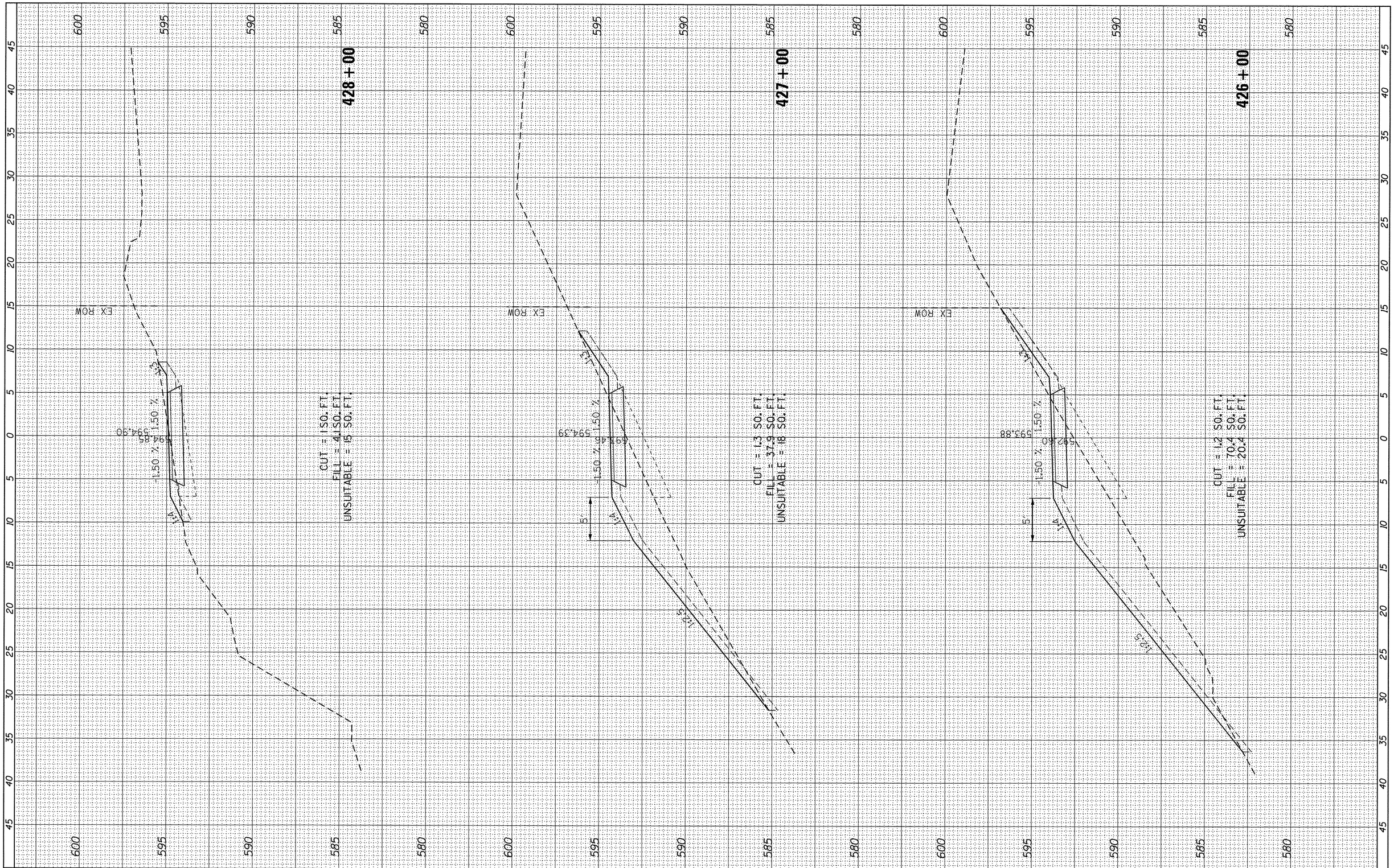

FINAL SURVEY		BY	DATE
NOTE BOOK	SURVEYED		
	PLOTTED		
	TEMPLATE		
	AREAS		
NO.	AREAS CHECKED		

ORIGINAL SURVEY		BY	DATE
NOTE BOOK	SURVEYED		
	PLOTTED		
	TEMPLATE		
	AREAS		
NO.	AREAS CHECKED		

AECOM
303 East Wacker Drive, Suite 1400, Chicago, IL 60601
T 1-312-373-7700 F 1-312-373-6800

USER NAME = ken_may	DESIGNED - KLM	REVISED -
	DRAWN - KJB	REVISED -
PLOT SCALE = 5.0000 ' / in.	CHECKED - BMC	REVISED -
PLOT DATE = 8/4/2016	DATE - AUGUST 5, 2016	REVISED -

STATE OF ILLINOIS
DEPARTMENT OF TRANSPORTATION

CAL-SAG GREENWAY TRAIL (BLUE ISLAND EAST SEGMENT)
CROSS SECTIONS / BLUE ISLAND EAST

SCALE: | SHEET OF SHEETS | STA. 426+00 TO STA. 428+00

F.A. RTE.	SECTION	COUNTY	TOTAL SHEETS	SHEET NO.
	08-00178-00-BT	COOK	64	43
		CONTRACT NO. 61C12		
		ILLINOIS FED. AID PROJECT		

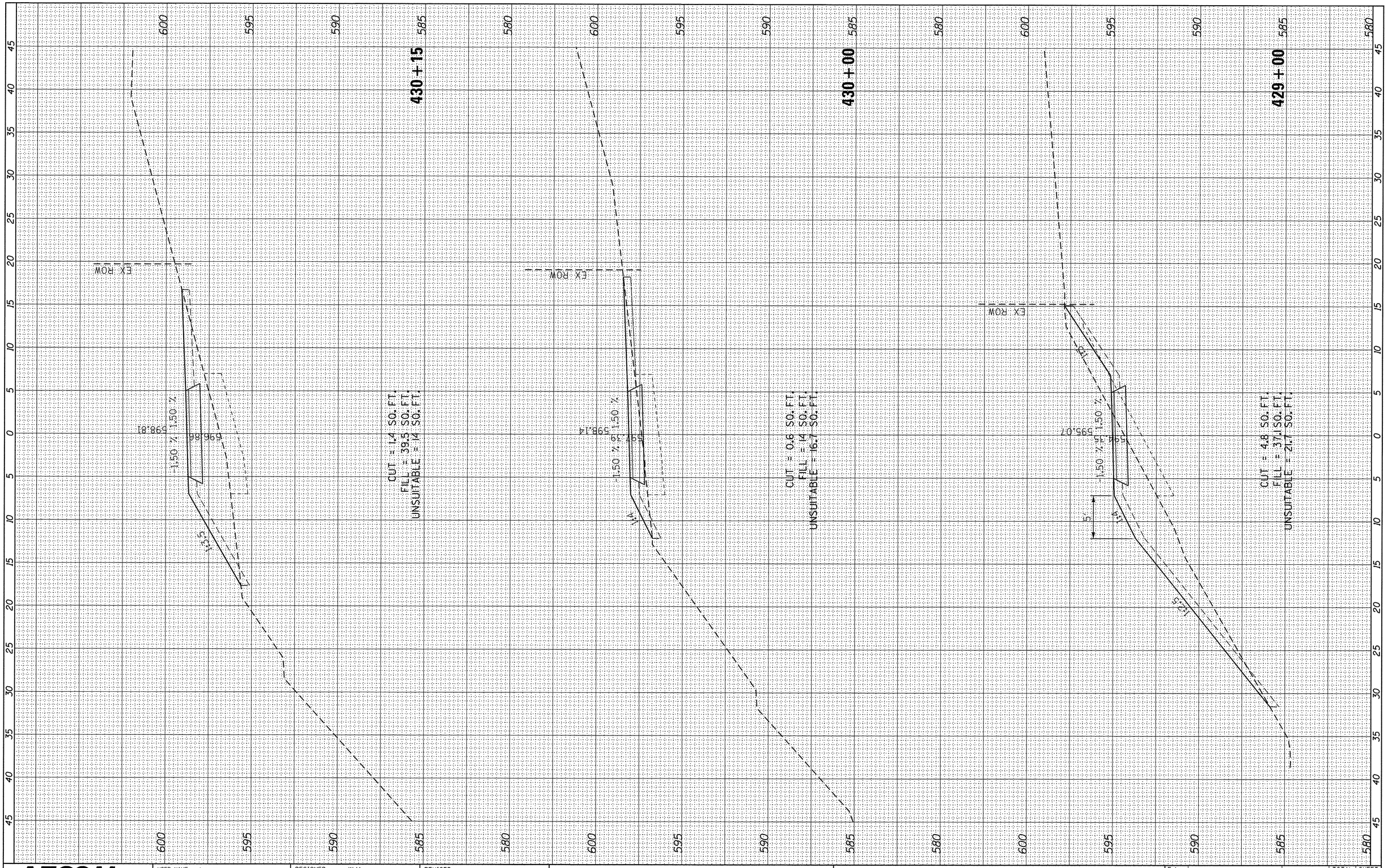

FINAL SURVEY	BY	DATE
SURVEYED		
PLOTTED		
TEMPLATE		
AREAS		
AREAS CHECKED		
NOTE BOOK NO.		

ORIGINAL SURVEY	BY	DATE
SURVEYED		
PLOTTED		
TEMPLATE		
AREAS		
AREAS CHECKED		
NOTE BOOK NO.		

AECOM
303 East Wacker Drive, Suite 1400, Chicago, IL 60601
T 1-312-373-7700 F 1-312-373-6800

USER NAME = ken.moy	DESIGNED - KLM	REVISED -
	DRAWN - KJB	REVISED -
PLOT SCALE = 5.0000 ' / in.	CHECKED - BMC	REVISED -
PLOT DATE = 8/4/2016	DATE - AUGUST 5, 2016	REVISED -

STATE OF ILLINOIS
DEPARTMENT OF TRANSPORTATION

CAL-SAG GREENWAY TRAIL (BLUE ISLAND EAST SEGMENT)
CROSS SECTIONS / BLUE ISLAND EAST

SCALE: | SHEET OF SHEETS | STA. 429+00 TO STA. 430+15

F.A. RTE.	SECTION	COUNTY	TOTAL SHEETS	SHEET NO.
	08-00178-00-BT	COOK	64	44
		CONTRACT NO. 61C12		
		ILLINOIS FED. AID PROJECT		

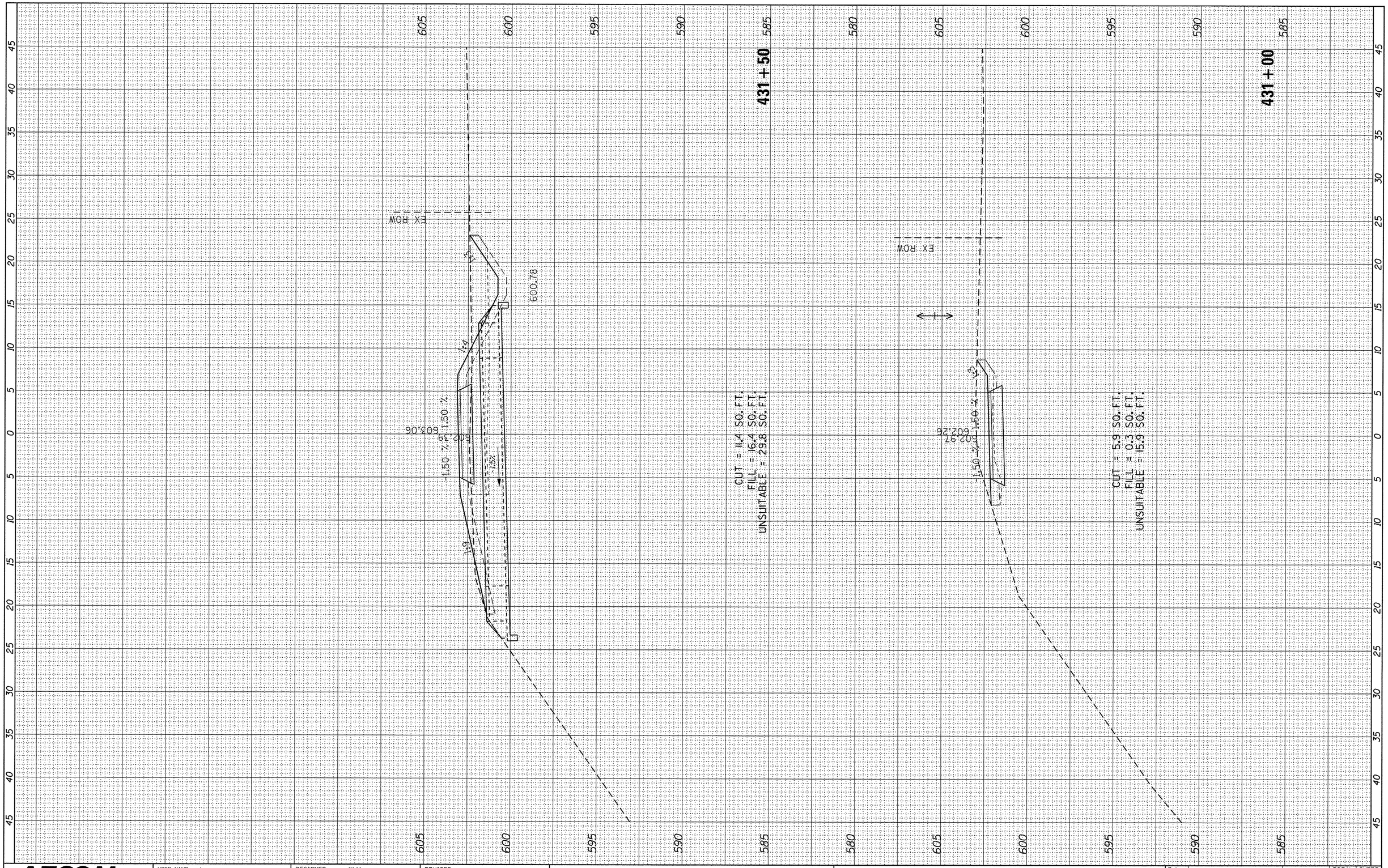

FINAL SURVEY	BY	DATE
SURVEYED		
PLOTTED		
TEMPLATE		
AREAS		
AREAS CHECKED		
NOTE BOOK NO.		

ORIGINAL SURVEY	BY	DATE
SURVEYED		
PLOTTED		
TEMPLATE		
AREAS		
AREAS CHECKED		
NOTE BOOK NO.		

AECOM
303 East Wacker Drive, Suite 1400, Chicago, IL 60601
T 1-312-373-7700 F 1-312-373-6800

USER NAME = ken.moy	DESIGNED - KLM	REVISED -
	DRAWN - KJB	REVISED -
PLOT SCALE = 5.0000 ' / in.	CHECKED - BMC	REVISED -
PLOT DATE = 8/4/2016	DATE - AUGUST 5, 2016	REVISED -

STATE OF ILLINOIS
DEPARTMENT OF TRANSPORTATION

CAL-SAG GREENWAY TRAIL (BLUE ISLAND EAST SEGMENT)
CROSS SECTIONS / BLUE ISLAND EAST

SCALE: | SHEET OF SHEETS | STA. 431+00 TO STA. 431+50

F.A. RTE.	SECTION	COUNTY	TOTAL SHEETS	SHEET NO.
	08-00178-00-BT	COOK	64	45
		CONTRACT NO. 61C12		
		ILLINOIS FED. AID PROJECT		

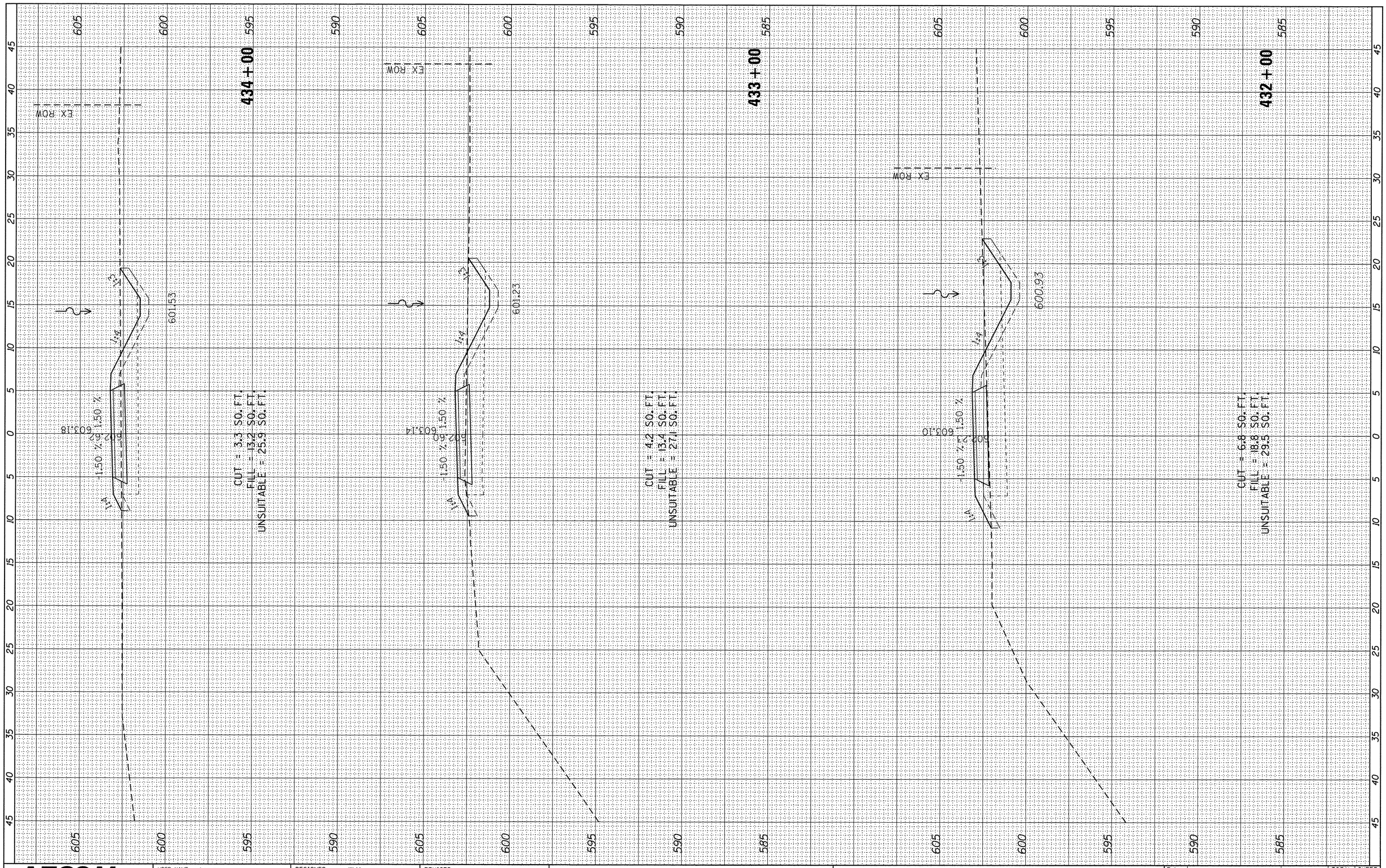

FINAL SURVEY	BY	DATE
SURVEYED		
PLOTTED		
TEMPLATE		
AREAS		
AREAS CHECKED		
NOTE BOOK NO.		

ORIGINAL SURVEY	BY	DATE
SURVEYED		
PLOTTED		
TEMPLATE		
AREAS		
AREAS CHECKED		
NOTE BOOK NO.		

AECOM
303 East Wacker Drive, Suite 1400, Chicago, IL 60601
T 1-312-373-7700 F 1-312-373-6800

USER NAME = ken.moy	DESIGNED - KLM	REVISED -
	DRAWN - KJB	REVISED -
PLOT SCALE = 5.0000 ' / in.	CHECKED - BMC	REVISED -
PLOT DATE = 8/4/2016	DATE - AUGUST 5, 2016	REVISED -

STATE OF ILLINOIS
DEPARTMENT OF TRANSPORTATION

CAL-SAG GREENWAY TRAIL (BLUE ISLAND EAST SEGMENT)
CROSS SECTIONS / BLUE ISLAND EAST

SCALE: | SHEET OF SHEETS | STA. 432+00 TO STA. 433+99

F.A. RTE.	SECTION	COUNTY	TOTAL SHEETS	SHEET NO.
	08-00178-00-BT	COOK	64	46
		CONTRACT NO. 61C12		
		ILLINOIS FED. AID PROJECT		

FINAL SURVEY	BY	DATE
NOTE BOOK NO.	SURVEYED	
	PLOTTED	
	TEMPLATE	
	AREAS	
	AREAS CHECKED	

ORIGINAL SURVEY	BY	DATE
NOTE BOOK NO.	SURVEYED	
	PLOTTED	
	TEMPLATE	
	AREAS	
	AREAS CHECKED	

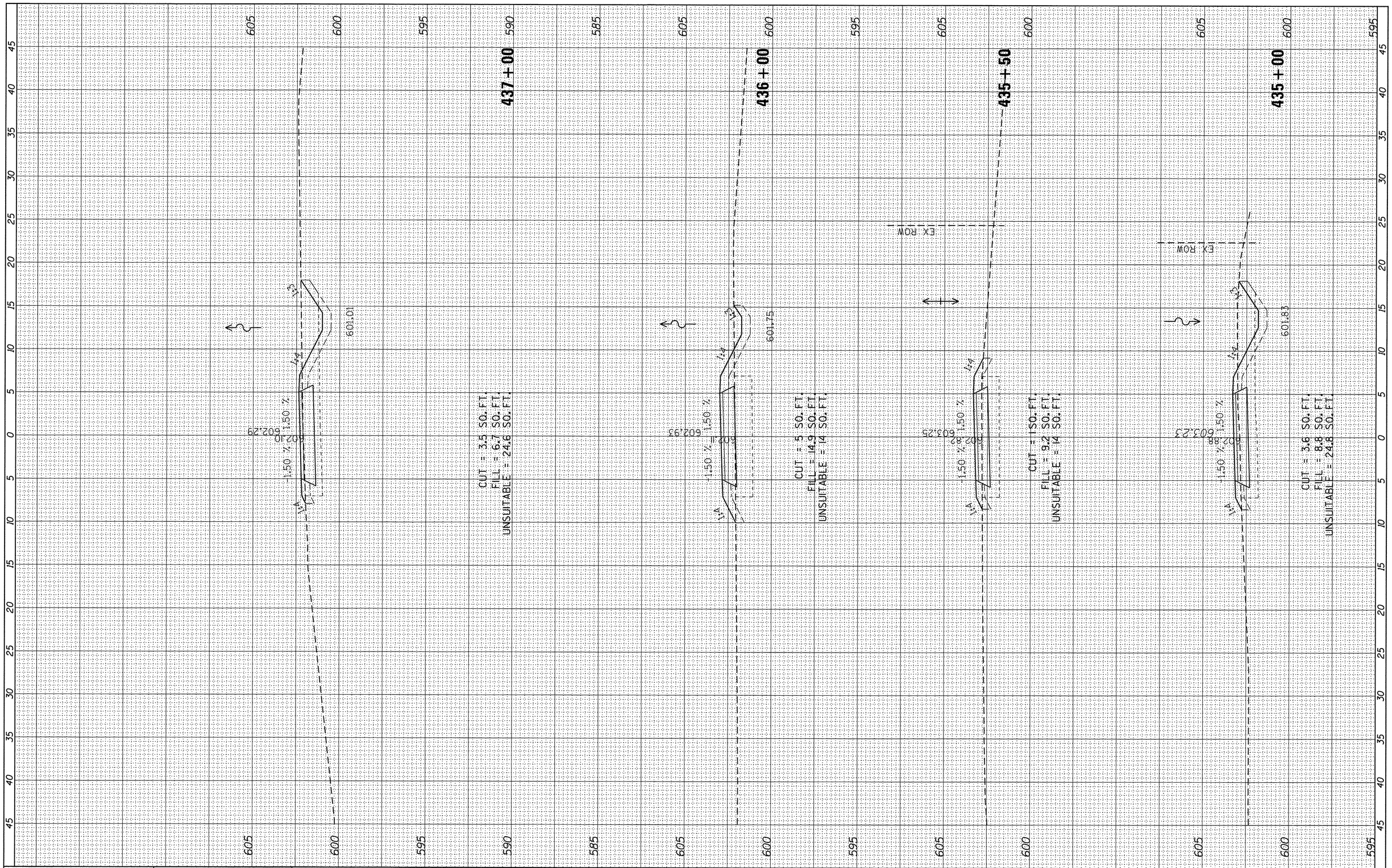

AECOM
303 East Wacker Drive, Suite 1400, Chicago, IL 60601
T 1-312-373-7700 F 1-312-373-6800

USER NAME = ken_moy	DESIGNED - KLM	REVISED -
	DRAWN - KJB	REVISED -
PLOT SCALE = 5.0000 ' / in.	CHECKED - BMC	REVISED -
PLOT DATE = 8/4/2016	DATE -	REVISED -

STATE OF ILLINOIS
DEPARTMENT OF TRANSPORTATION

CAL-SAG GREENWAY TRAIL (BLUE ISLAND EAST SEGMENT)
CROSS SECTIONS / BLUE ISLAND EAST

SCALE: | SHEET OF SHEETS | STA. 435+00 TO STA. 437+00

F.A. RTE.	SECTION	COUNTY	TOTAL SHEETS	SHEET NO.
	08-00178-00-BT	COOK	64	47
		CONTRACT NO. 61C12		
		ILLINOIS FED. AID PROJECT		

FINAL SURVEY		BY	DATE
NOTE BOOK	SURVEYED		
	PLOTTED		
	TEMPLATE		
NO.	AREAS		
	AREAS CHECKED		

ORIGINAL SURVEY		BY	DATE
NOTE BOOK	SURVEYED		
	PLOTTED		
	TEMPLATE		
NO.	AREAS		
	AREAS CHECKED		

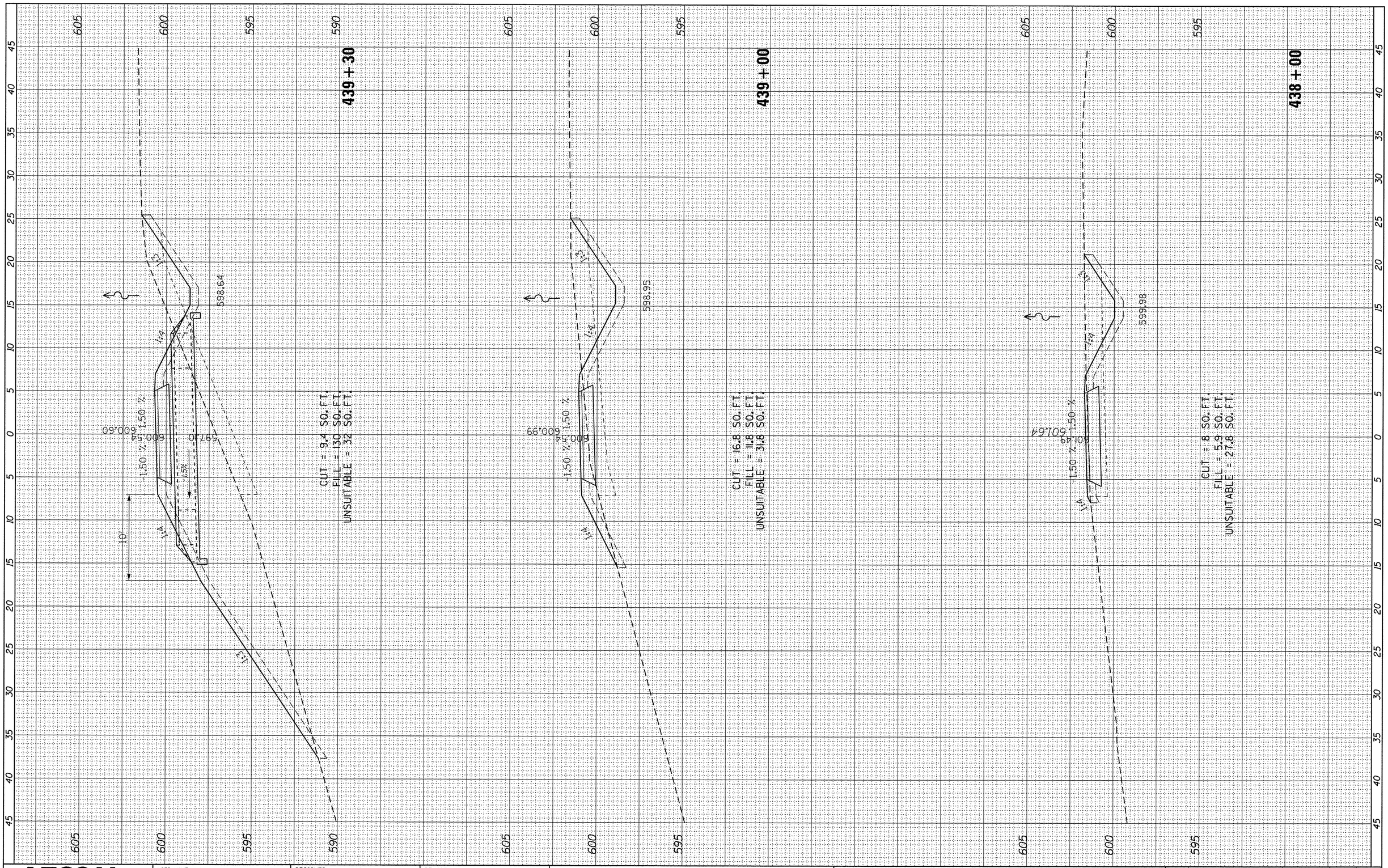

AECOM
303 East Wacker Drive, Suite 1400, Chicago, IL 60601
T 1-312-373-7700 F 1-312-373-6800

USER NAME = ken_moy	DESIGNED - KLM	REVISED -
	DRAWN - KJB	REVISED -
PLOT SCALE = 5.0000 ' / in.	CHECKED - BMC	REVISED -
PLOT DATE = 8/4/2016	DATE - AUGUST 5, 2016	REVISED -

STATE OF ILLINOIS
DEPARTMENT OF TRANSPORTATION

CAL-SAG GREENWAY TRAIL (BLUE ISLAND EAST SEGMENT)
CROSS SECTIONS / BLUE ISLAND EAST

SCALE: | SHEET OF SHEETS | STA. 438+00 TO STA. 439+30

F.A. RTE.	SECTION	COUNTY	TOTAL SHEETS	SHEET NO.
	08-00178-00-BT	COOK	64	48
		CONTRACT NO. 61C12		
		ILLINOIS FED. AID PROJECT		

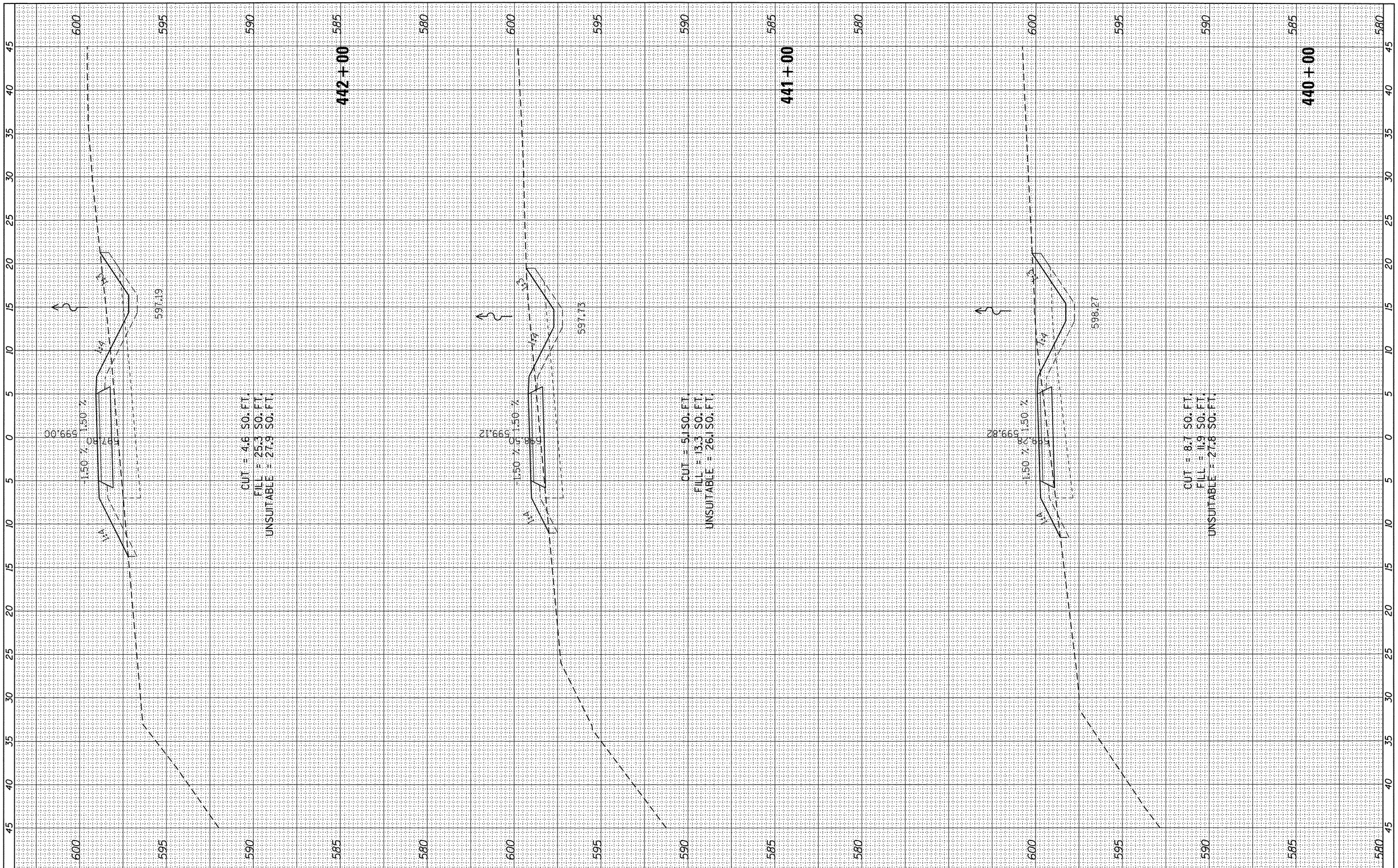

FINAL SURVEY		BY	DATE
NOTE BOOK NO.	SURVEYED		
	PLOTTED		
	TEMPLATE		
	AREAS		
	AREAS CHECKED		

ORIGINAL SURVEY		BY	DATE
NOTE BOOK NO.	SURVEYED		
	PLOTTED		
	TEMPLATE		
	AREAS		
	AREAS CHECKED		

AECOM
303 East Wacker Drive, Suite 1400, Chicago, IL 60601
T 1-312-373-7700 F 1-312-373-6800

USER NAME = ken_moy	DESIGNED - KLM	REVISED -
	DRAWN - KJB	REVISED -
PLOT SCALE = 5.0000 ' / in.	CHECKED - BMC	REVISED -
PLOT DATE = 8/4/2016	DATE - AUGUST 5, 2016	REVISED -

STATE OF ILLINOIS
DEPARTMENT OF TRANSPORTATION

CAL-SAG GREENWAY TRAIL (BLUE ISLAND EAST SEGMENT)
CROSS SECTIONS / BLUE ISLAND EAST

SCALE: | SHEET OF SHEETS | STA. 440+00 TO STA. 441+99

F.A. RTE.	SECTION	COUNTY	TOTAL SHEETS	SHEET NO.
	08-00178-00-BT	COOK	64	49
		CONTRACT NO. 61C12		
		ILLINOIS FED. AID PROJECT		

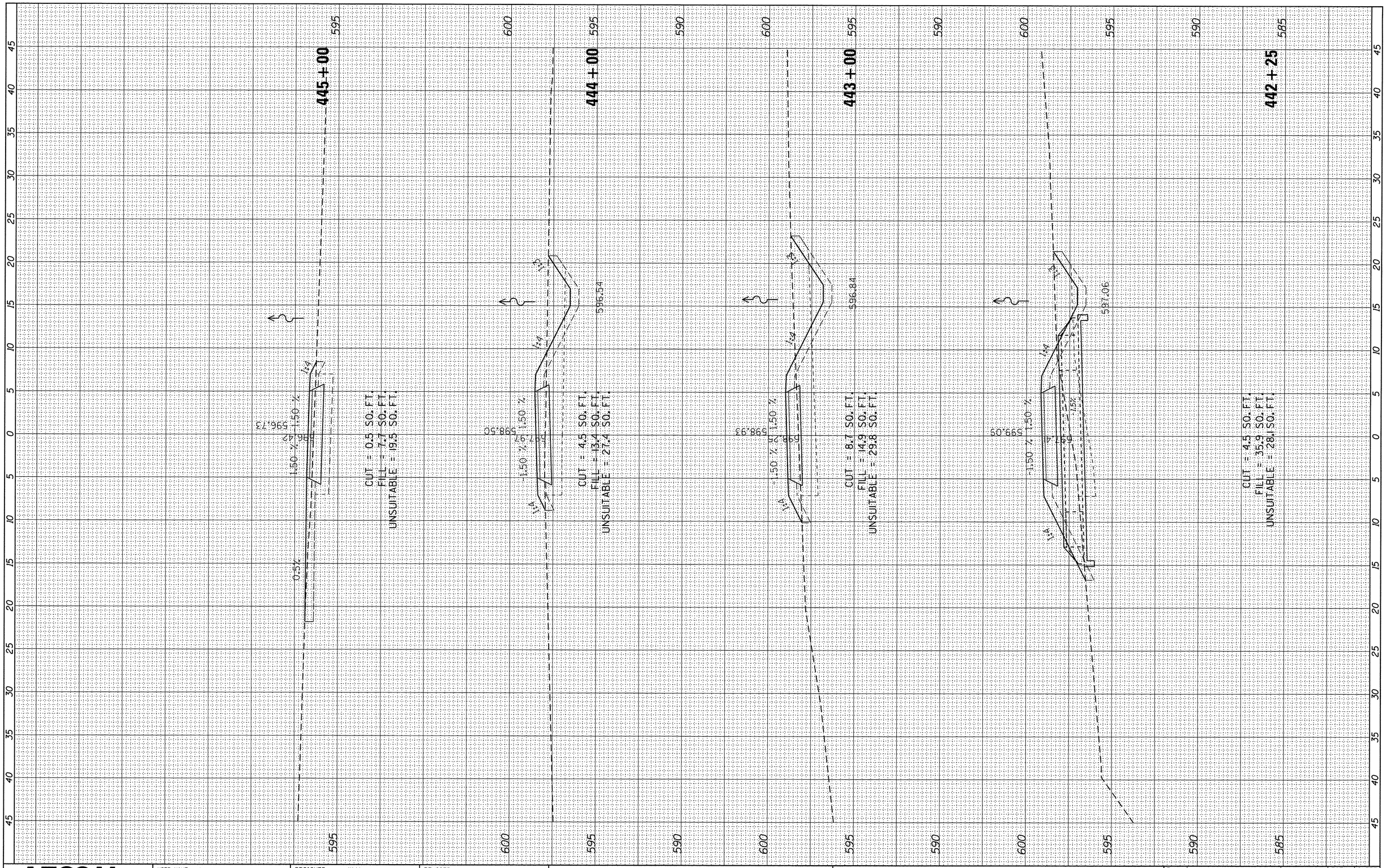

FINAL SURVEY	BY	DATE
SURVEYED		
PLOTTED		
TEMPLATE		
AREAS		
AREAS CHECKED		
NOTE BOOK NO.		

ORIGINAL SURVEY	BY	DATE
SURVEYED		
PLOTTED		
TEMPLATE		
AREAS		
AREAS CHECKED		
NOTE BOOK NO.		

AECOM
303 East Wacker Drive, Suite 1400, Chicago, IL 60601
T 1-312-373-7700 F 1-312-373-6800

USER NAME = ken_moy	DESIGNED - KLM	REVISED -
	DRAWN - KJB	REVISED -
PLOT SCALE = 5.0000 ' / in.	CHECKED - BMC	REVISED -
PLOT DATE = 8/4/2016	DATE - AUGUST 5, 2016	REVISED -

STATE OF ILLINOIS
DEPARTMENT OF TRANSPORTATION

CAL-SAG GREENWAY TRAIL (BLUE ISLAND EAST SEGMENT)
CROSS SECTIONS / BLUE ISLAND EAST

SCALE: | SHEET OF SHEETS | STA. 442+25 TO STA. 444+99

F.A. RTE.	SECTION	COUNTY	TOTAL SHEETS	SHEET NO.
	08-00178-00-BT	COOK	64	50
		CONTRACT NO. 61C12		
		ILLINOIS FED. AID PROJECT		

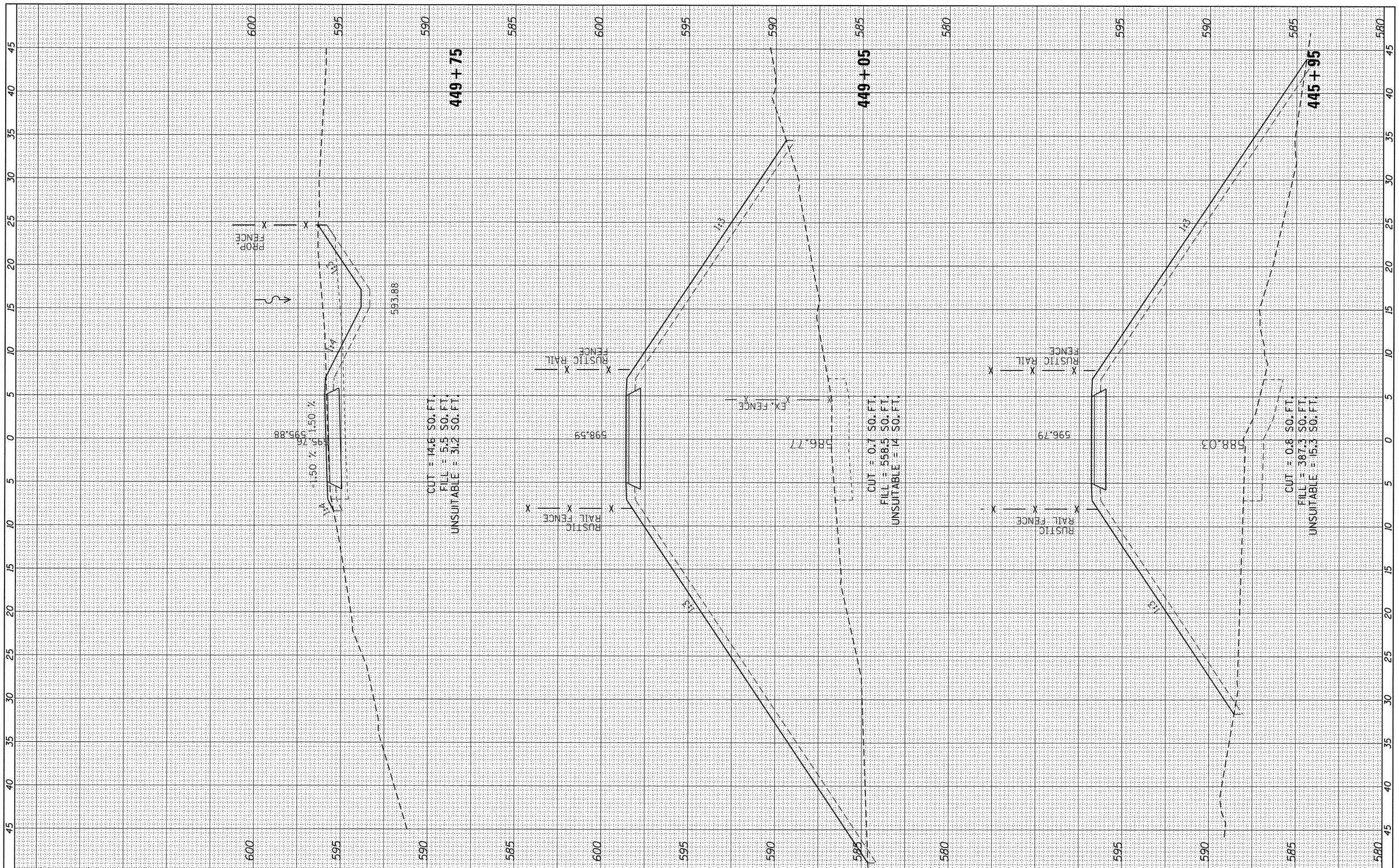

FINAL SURVEY	BY	DATE
SURVEYED		
PLOTTED		
TEMPLATE		
AREAS		
AREAS CHECKED		
NOTE BOOK NO.		

ORIGINAL SURVEY	BY	DATE
SURVEYED		
PLOTTED		
TEMPLATE		
AREAS		
AREAS CHECKED		
NOTE BOOK NO.		

AECOM
303 East Wacker Drive, Suite 1400, Chicago, IL 60601
T 1-312-373-7700 F 1-312-373-6800

USER NAME = ken_moy	DESIGNED - KLM	REVISED -
	DRAWN - KJB	REVISED -
PLOT SCALE = 5.0000 ' / in.	CHECKED - BMC	REVISED -
PLOT DATE = 8/4/2016	DATE - AUGUST 5, 2016	REVISED -

STATE OF ILLINOIS
DEPARTMENT OF TRANSPORTATION

CAL-SAG GREENWAY TRAIL (BLUE ISLAND EAST SEGMENT)
CROSS SECTIONS / BLUE ISLAND EAST

SCALE: | SHEET OF SHEETS | STA. 445+95 TO STA. 449+75

F.A. RTE.	SECTION	COUNTY	TOTAL SHEETS	SHEET NO.
	08-00178-00-BT	COOK	64	51
		CONTRACT NO. 61C12		
		ILLINOIS FED. AID PROJECT		

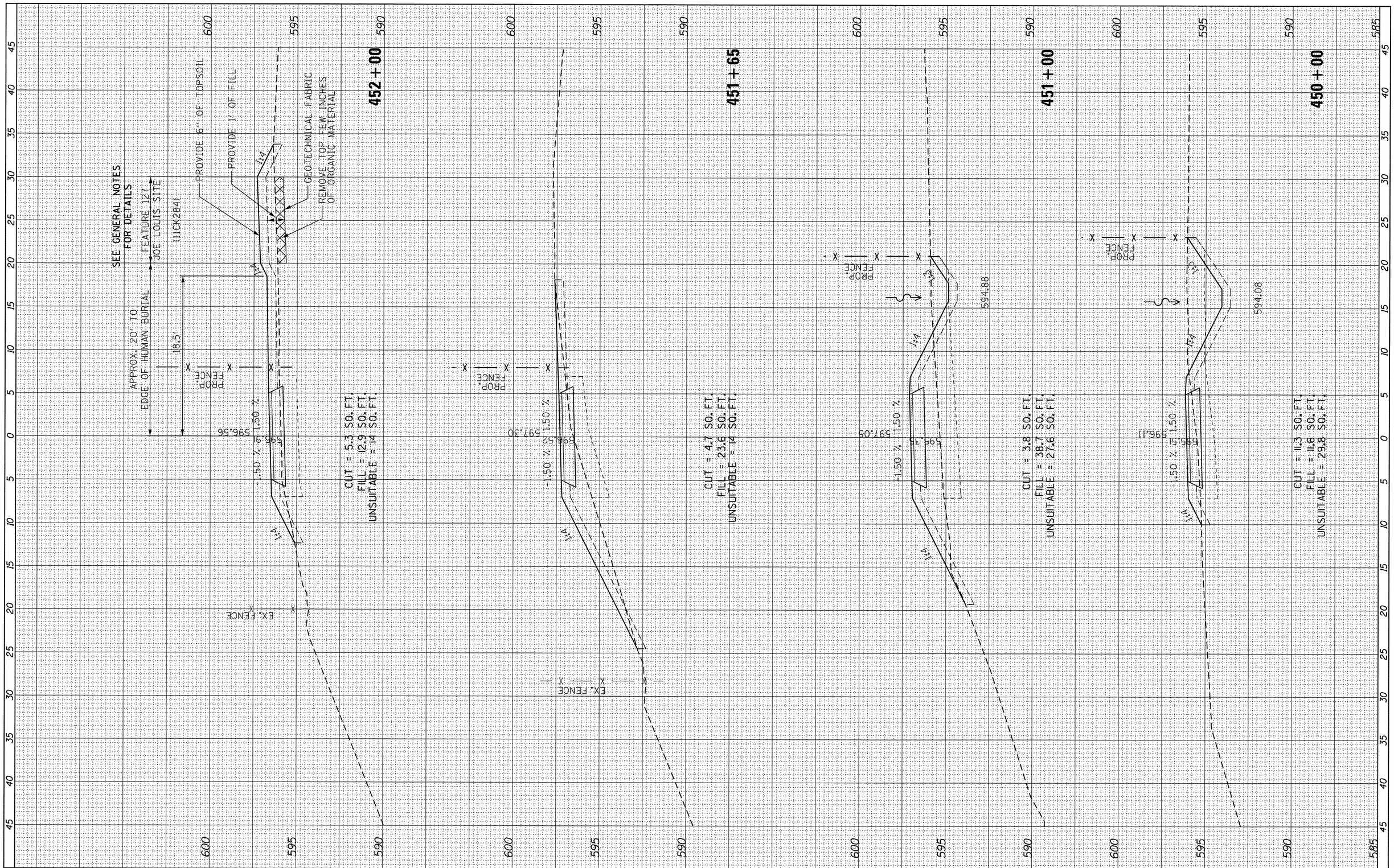

FINAL SURVEY	BY	DATE
SURVEYED		
PLOTTED		
TEMPLATE		
AREAS		
AREAS CHECKED		
NOTE BOOK NO.		

ORIGINAL SURVEY	BY	DATE
SURVEYED		
PLOTTED		
TEMPLATE		
AREAS		
AREAS CHECKED		
NOTE BOOK NO.		

AECOM
303 East Wacker Drive, Suite 1400, Chicago, IL 60601
T 1-312-373-7700 F 1-312-373-6800

USER NAME = ken_moy	DESIGNED - KLM	REVISED -
	DRAWN - KJB	REVISED -
PLOT SCALE = 5.0000 ' / in.	CHECKED - BMC	REVISED -
PLOT DATE = 8/4/2016	DATE - AUGUST 5, 2016	REVISED -

STATE OF ILLINOIS
DEPARTMENT OF TRANSPORTATION

CAL-SAG GREENWAY TRAIL (BLUE ISLAND EAST SEGMENT)
CROSS SECTIONS / BLUE ISLAND EAST

SCALE: | SHEET OF SHEETS | STA. 450+00 TO STA. 451+99

F.A. RTE.	SECTION	COUNTY	TOTAL SHEETS	SHEET NO.
	08-00178-00-BT	COOK	64	52
		CONTRACT NO. 61C12		
		ILLINOIS FED. AID PROJECT		

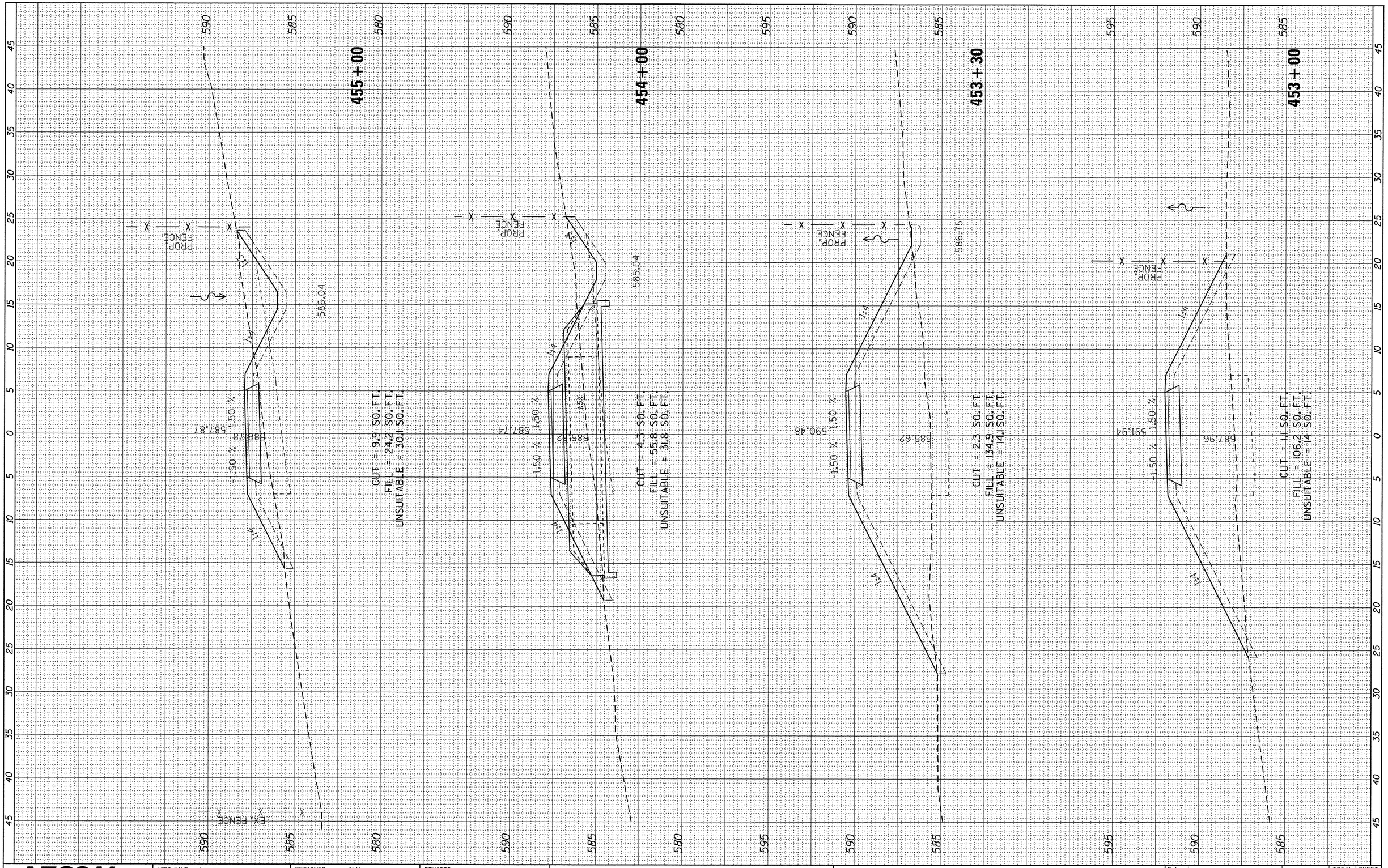

FINAL SURVEY		BY	DATE
	SURVEYED		
	PLOTTED		
NOTE BOOK	TEMPLATE		
	AREAS		
NO.	AREAS CHECKED		

ORIGINAL SURVEY		BY	DATE
	SURVEYED		
	PLOTTED		
NOTE BOOK	TEMPLATE		
	AREAS		
NO.	AREAS CHECKED		

AECOM
303 East Wacker Drive, Suite 1400, Chicago, IL 60601
T 1-312-373-7700 F 1-312-373-6800

USER NAME = ken.moy	DESIGNED - KLM	REVISED -
	DRAWN - KJB	REVISED -
PLOT SCALE = 5.0000 ' / in.	CHECKED - BMC	REVISED -
PLOT DATE = 8/4/2016	DATE - AUGUST 5, 2016	REVISED -

STATE OF ILLINOIS
DEPARTMENT OF TRANSPORTATION

CAL-SAG GREENWAY TRAIL (BLUE ISLAND EAST SEGMENT)
CROSS SECTIONS / BLUE ISLAND EAST

SCALE: | SHEET OF SHEETS | STA. 453+00 TO STA. 454+99

F.A. RTE.	SECTION	COUNTY	TOTAL SHEETS	SHEET NO.
	08-00178-00-BT	COOK	64	53
		CONTRACT NO. 61C12		
		ILLINOIS FED. AID PROJECT		

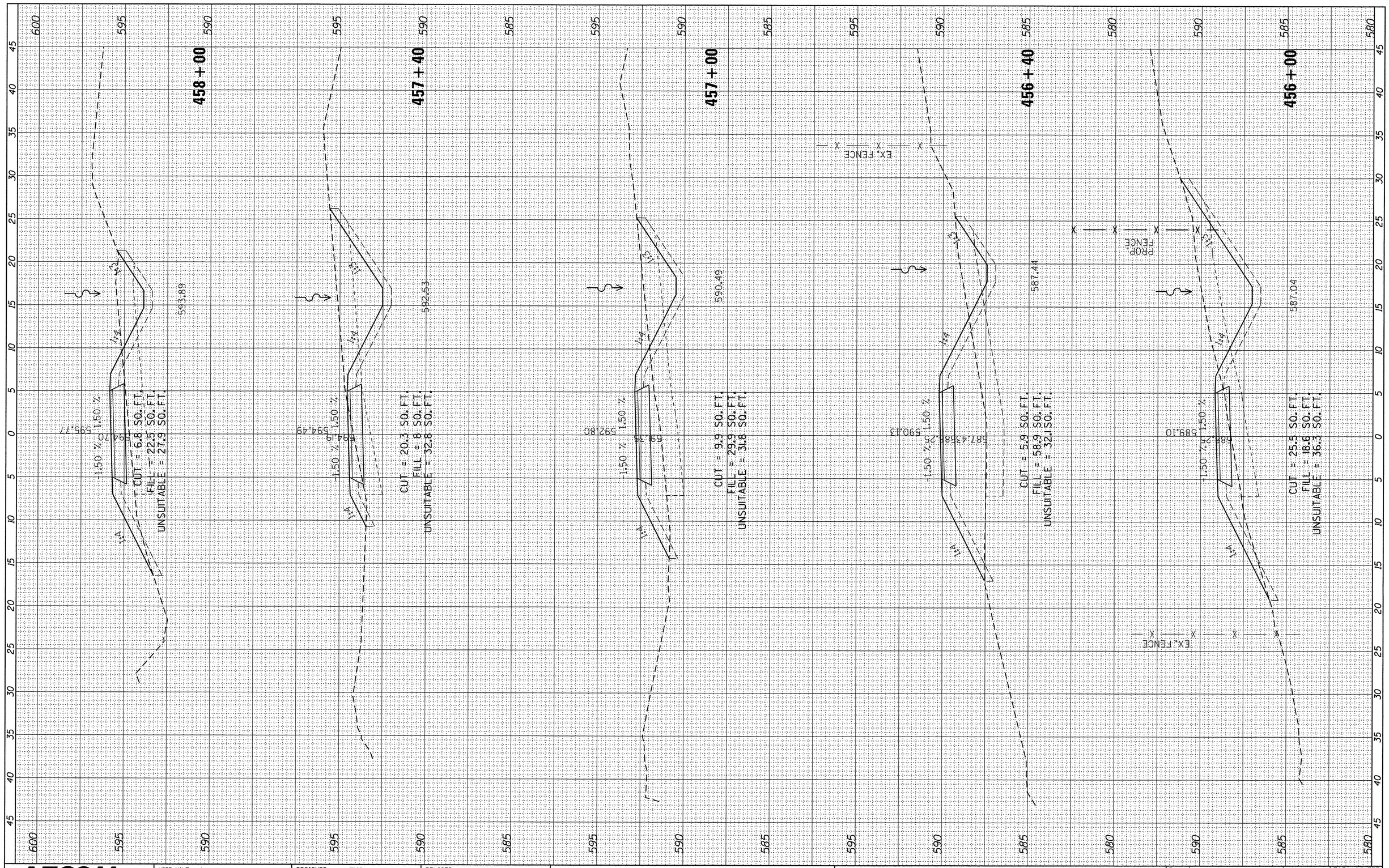

FINAL SURVEY		BY	DATE
NOTE BOOK	SURVEYED		
	PLOTTED		
	TEMPLATE		
	AREAS		
NO.	AREAS CHECKED		

ORIGINAL SURVEY		BY	DATE
NOTE BOOK	SURVEYED		
	PLOTTED		
	TEMPLATE		
	AREAS		
NO.	AREAS CHECKED		

AECOM
303 East Wacker Drive, Suite 1400, Chicago, IL 60601
T 1-312-373-7700 F 1-312-373-6800

USER NAME = ken_moy	DESIGNED - KLM	REVISED -
	DRAWN - KJB	REVISED -
PLOT SCALE = 5.0000 ' / in.	CHECKED - BMC	REVISED -
PLOT DATE = 8/4/2016	DATE - AUGUST 5, 2016	REVISED -

STATE OF ILLINOIS
DEPARTMENT OF TRANSPORTATION

CAL-SAG GREENWAY TRAIL (BLUE ISLAND EAST SEGMENT)
CROSS SECTIONS / BLUE ISLAND EAST

SCALE: | SHEET OF SHEETS | STA. 456+00 TO STA. 457+99

F.A. RTE.	SECTION	COUNTY	TOTAL SHEETS	SHEET NO.
	08-00178-00-BT	COOK	64	54
		CONTRACT NO. 61C12		
		ILLINOIS FED. AID PROJECT		

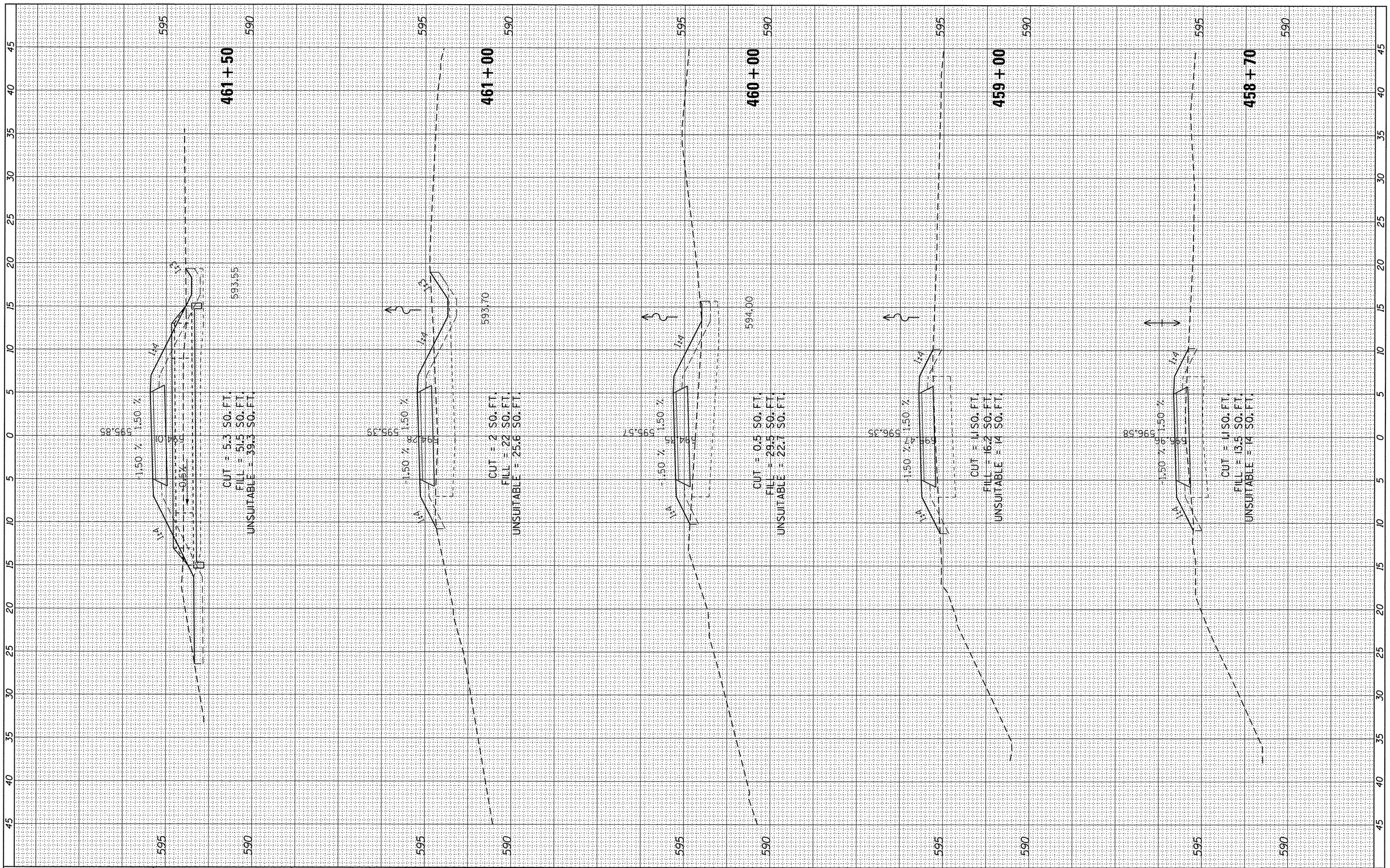

FINAL SURVEY	BY	DATE
SURVEYED		
PLOTTED		
TEMPLATE		
AREAS		
AREAS CHECKED		
NOTE BOOK NO.		

ORIGINAL SURVEY	BY	DATE
SURVEYED		
PLOTTED		
TEMPLATE		
AREAS		
AREAS CHECKED		
NOTE BOOK NO.		

AECOM
303 East Wacker Drive, Suite 1400, Chicago, IL 60601
T 1-312-373-7700 F 1-312-373-6800

USER NAME = ken_moy	DESIGNED - KLM	REVISED -
	DRAWN - KJB	REVISED -
PLOT SCALE = 5.0000 ' / in.	CHECKED - BMC	REVISED -
PLOT DATE = 8/4/2016	DATE - AUGUST 5, 2016	REVISED -

STATE OF ILLINOIS
DEPARTMENT OF TRANSPORTATION

CAL-SAG GREENWAY TRAIL (BLUE ISLAND EAST SEGMENT)
CROSS SECTIONS / BLUE ISLAND EAST

SCALE: | SHEET OF SHEETS | STA. 458+70 TO STA. 461+50

F.A. RTE.	SECTION	COUNTY	TOTAL SHEETS	SHEET NO.
	08-00178-00-BT	COOK	64	55
		CONTRACT NO. 61C12		
		ILLINOIS FED. AID PROJECT		

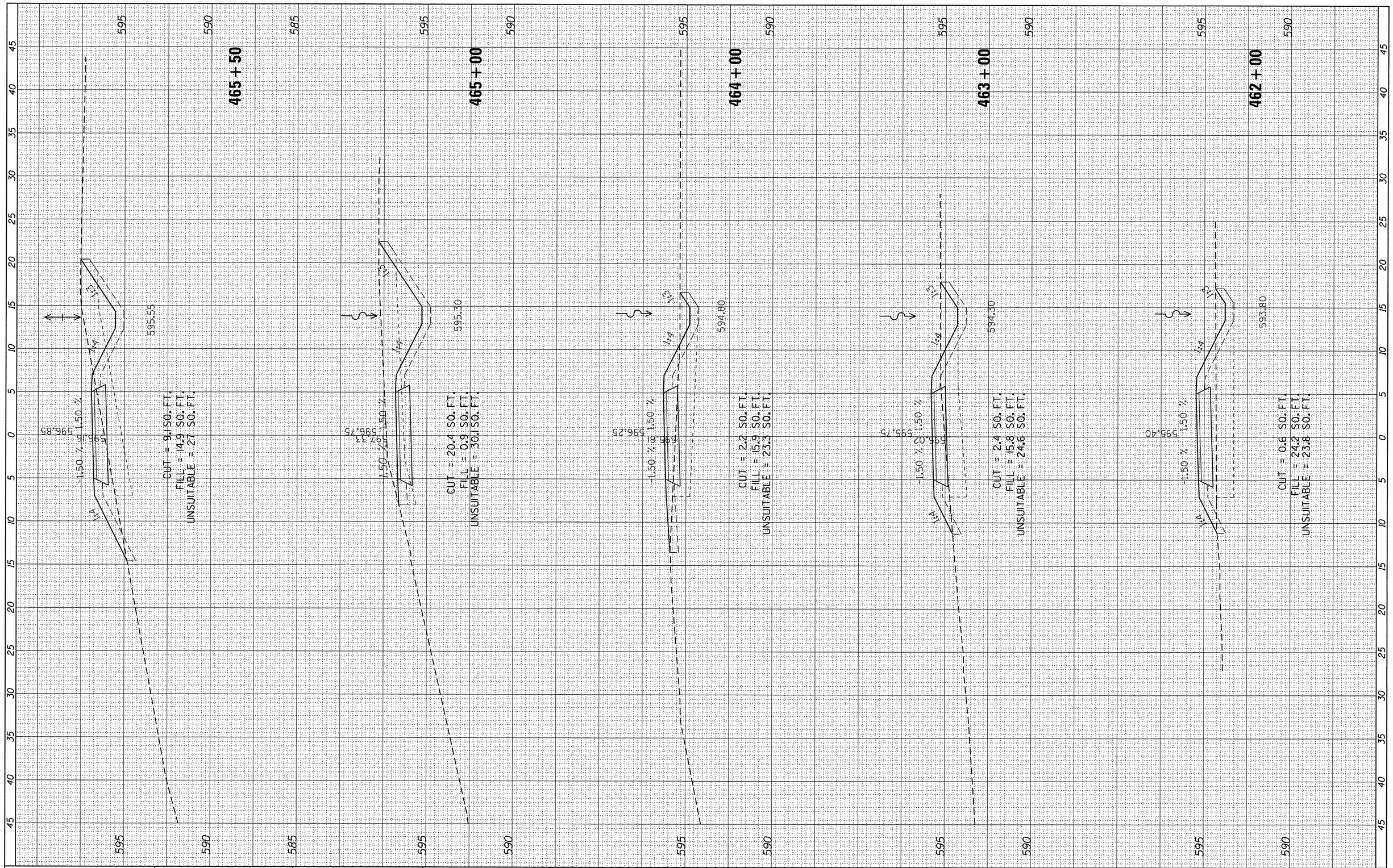

FINAL SURVEY		BY	DATE
NOTE BOOK NO.	SURVEYED		
	PLOTTED		
	TEMPLATE		
	AREAS		
	AREAS CHECKED		

ORIGINAL SURVEY		BY	DATE
NOTE BOOK NO.	SURVEYED		
	PLOTTED		
	TEMPLATE		
	AREAS		
	AREAS CHECKED		

AECOM
303 East Wacker Drive, Suite 1400, Chicago, IL 60601
T 1-312-373-7700 F 1-312-373-6800

USER NAME = ken.moy	DESIGNED - KLM	REVISED -
	DRAWN - KJB	REVISED -
PLOT SCALE = 5.0000 ' / in.	CHECKED - BMC	REVISED -
PLOT DATE = 8/4/2016	DATE - AUGUST 5, 2016	REVISED -

STATE OF ILLINOIS
DEPARTMENT OF TRANSPORTATION

CAL-SAG GREENWAY TRAIL (BLUE ISLAND EAST SEGMENT)
CROSS SECTIONS / BLUE ISLAND EAST

SCALE: | SHEET OF SHEETS | STA. 462+00 TO STA. 465+50

F.A. RTE.	SECTION	COUNTY	TOTAL SHEETS	SHEET NO.
	08-00178-00-BT	COOK	64	56
		CONTRACT NO. 61C12		
		ILLINOIS FED. AID PROJECT		

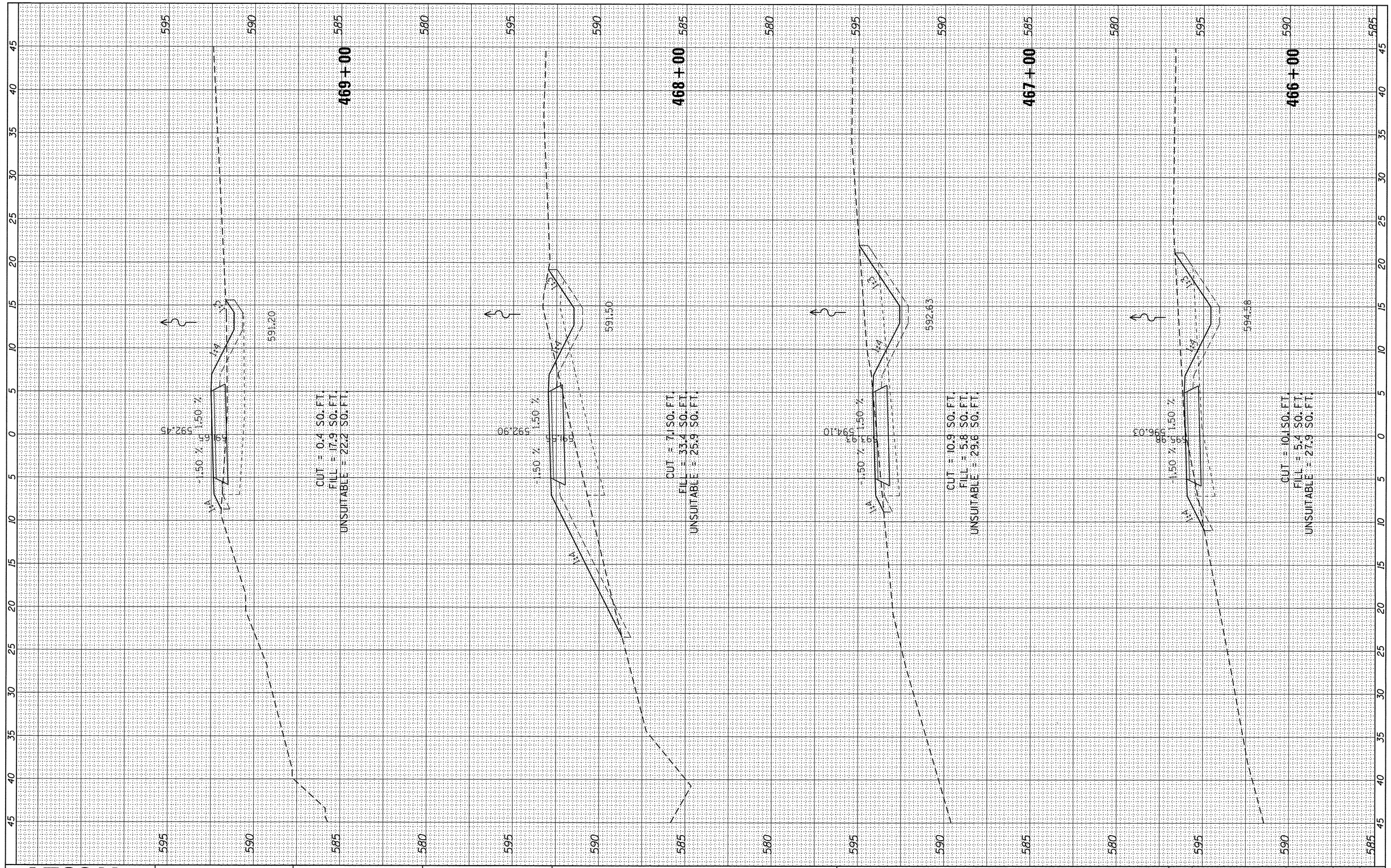

FINAL SURVEY	BY	DATE
SURVEYED		
PLOTTED		
TEMPLATE		
AREAS		
AREAS CHECKED		
NOTE BOOK NO.		

ORIGINAL SURVEY	BY	DATE
SURVEYED		
PLOTTED		
TEMPLATE		
AREAS		
AREAS CHECKED		
NOTE BOOK NO.		

AECOM
303 East Wacker Drive, Suite 1400, Chicago, IL 60601
T 1-312-373-7700 F 1-312-373-6800

USER NAME = ken_moy	DESIGNED - KLM	REVISED -
	DRAWN - KJB	REVISED -
PLOT SCALE = 5.0000 ' / in.	CHECKED - BMC	REVISED -
PLOT DATE = 8/4/2016	DATE - AUGUST 5, 2016	REVISED -

STATE OF ILLINOIS
DEPARTMENT OF TRANSPORTATION

CAL-SAG GREENWAY TRAIL (BLUE ISLAND EAST SEGMENT)
CROSS SECTIONS / BLUE ISLAND EAST

SCALE: | SHEET OF SHEETS | STA. 466+00 TO STA. 469+00

F.A. RTE.	SECTION	COUNTY	TOTAL SHEETS	SHEET NO.
	08-00178-00-BT	COOK	64	57
		CONTRACT NO. 61C12		
		ILLINOIS FED. AID PROJECT		

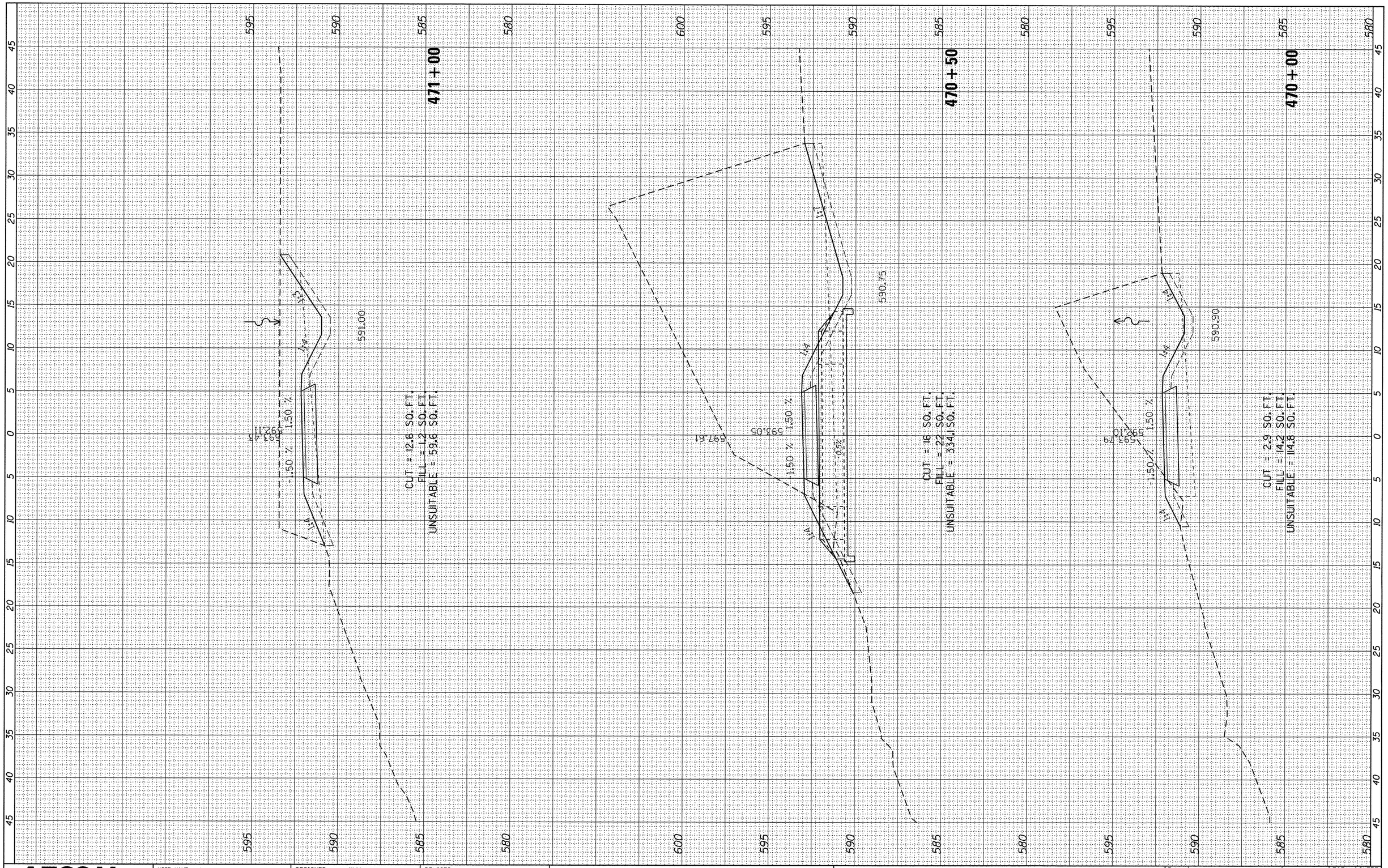

FINAL SURVEY	BY	DATE
SURVEYED		
PLOTTED		
TEMPLATE		
AREAS		
AREAS CHECKED		
NOTE BOOK NO.		

ORIGINAL SURVEY	BY	DATE
SURVEYED		
PLOTTED		
TEMPLATE		
AREAS		
AREAS CHECKED		
NOTE BOOK NO.		

AECOM
303 East Wacker Drive, Suite 1400, Chicago, IL 60601
T 1-312-373-7700 F 1-312-373-6800

USER NAME = ken.moy	DESIGNED - KLM	REVISED -
	DRAWN - KJB	REVISED -
PLOT SCALE = 5.0000 ' / in.	CHECKED - BMC	REVISED -
PLOT DATE = 8/4/2016	DATE - AUGUST 5, 2016	REVISED -

STATE OF ILLINOIS
DEPARTMENT OF TRANSPORTATION

CAL-SAG GREENWAY TRAIL (BLUE ISLAND EAST SEGMENT)
CROSS SECTIONS / BLUE ISLAND EAST

SCALE: | SHEET OF SHEETS | STA. 470+00 TO STA. 471+00

F.A. RTE.	SECTION	COUNTY	TOTAL SHEETS	SHEET NO.
	08-00178-00-BT	COOK	64	58
		CONTRACT NO. 61C12		
		ILLINOIS FED. AID PROJECT		

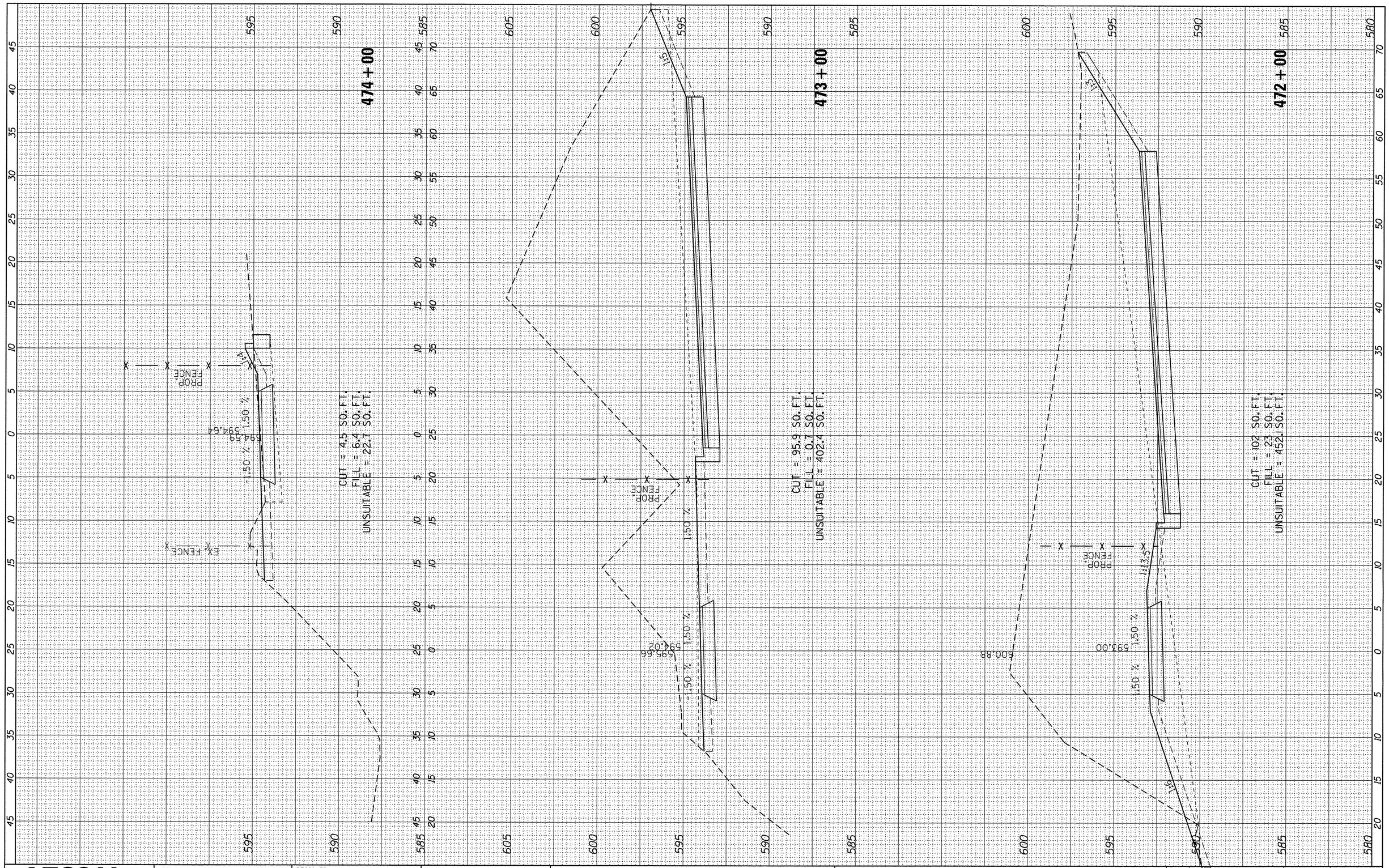

FINAL SURVEY	BY	DATE
NOTE BOOK NO.	SURVEYED	
	PLOTTED	
	TEMPLATE	
	AREAS	
	AREAS CHECKED	

ORIGINAL SURVEY	BY	DATE
NOTE BOOK NO.	SURVEYED	
	PLOTTED	
	TEMPLATE	
	AREAS	
	AREAS CHECKED	

AECOM
303 East Wacker Drive, Suite 1400, Chicago, IL 60601
T 1-312-373-7700 F 1-312-373-6800

USER NAME = ken_moy	DESIGNED - KLM	REVISED -
	DRAWN - KJB	REVISED -
PLOT SCALE = 5.0000 ' / in.	CHECKED - BMC	REVISED -
PLOT DATE = 8/4/2016	DATE - AUGUST 5, 2016	REVISED -

STATE OF ILLINOIS
DEPARTMENT OF TRANSPORTATION

CAL-SAG GREENWAY TRAIL (BLUE ISLAND EAST SEGMENT)
CROSS SECTIONS / BLUE ISLAND EAST

SCALE: | SHEET OF SHEETS | STA. 472+00 TO STA. 474+00

F.A. RTE.	SECTION	COUNTY	TOTAL SHEETS	SHEET NO.
	08-00178-00-BT	COOK	64	59
		CONTRACT NO. 61C12		
		ILLINOIS FED. AID PROJECT		

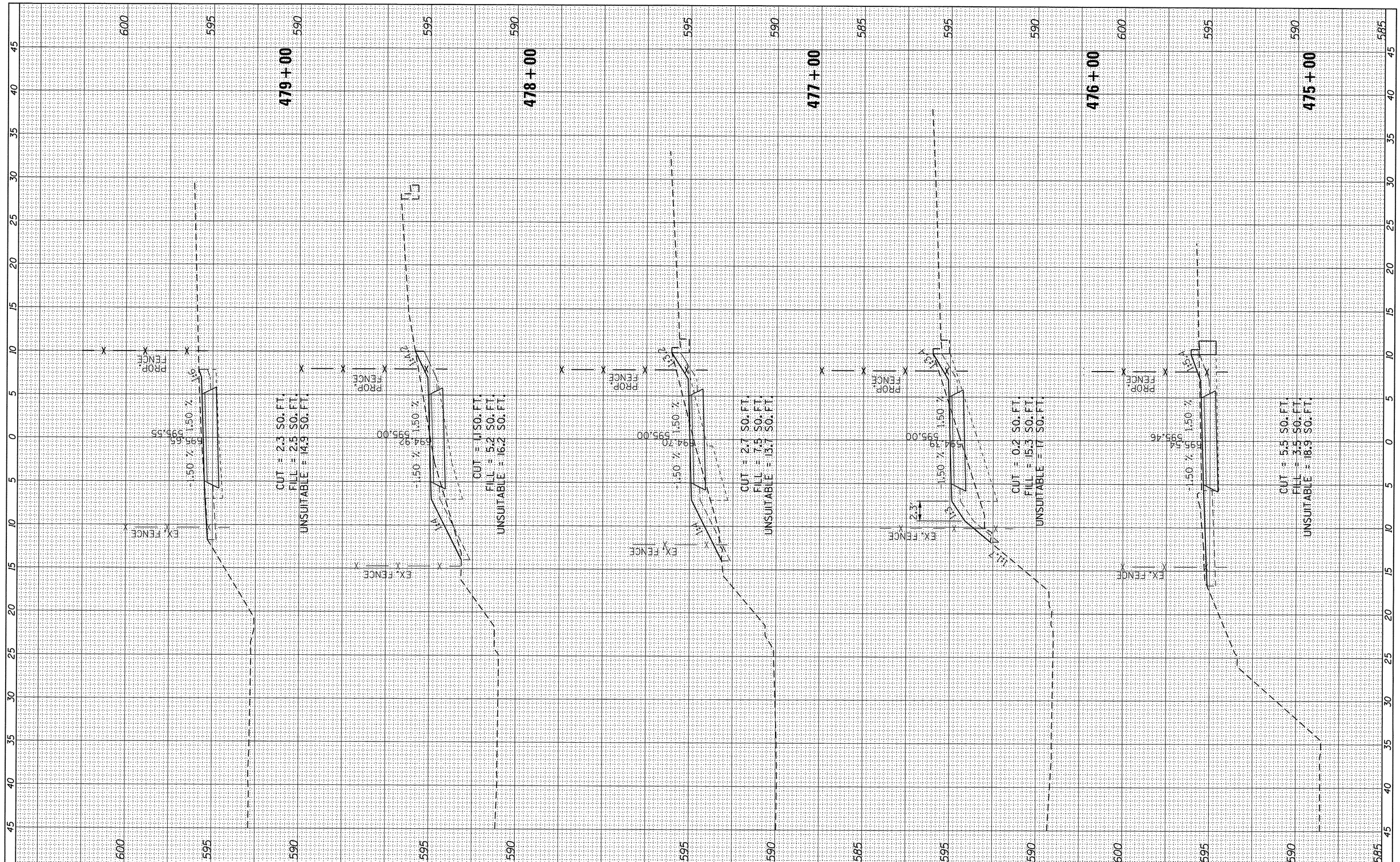

FINAL SURVEY	BY	DATE
SURVEYED		
PLOTTED		
TEMPLATE		
AREAS		
AREAS CHECKED		
NOTE BOOK NO.		

ORIGINAL SURVEY	BY	DATE
SURVEYED		
PLOTTED		
TEMPLATE		
AREAS		
AREAS CHECKED		
NOTE BOOK NO.		

AECOM
303 East Wacker Drive, Suite 1400, Chicago, IL 60601
T 1-312-373-7700 F 1-312-373-6800

USER NAME = ken_moy	DESIGNED - KLM	REVISED -
	DRAWN - KJB	REVISED -
PLOT SCALE = 5.0000 ' / in.	CHECKED - BMC	REVISED -
PLOT DATE = 8/4/2016	DATE - AUGUST 5, 2016	REVISED -

STATE OF ILLINOIS
DEPARTMENT OF TRANSPORTATION

CAL-SAG GREENWAY TRAIL (BLUE ISLAND EAST SEGMENT)
CROSS SECTIONS / BLUE ISLAND EAST

SCALE: | SHEET OF SHEETS | STA. 475+00 TO STA. 479+00

F.A. RTE.	SECTION	COUNTY	TOTAL SHEETS	SHEET NO.
	08-00178-00-BT	COOK	64	60
		CONTRACT NO. 61C12		
		ILLINOIS FED. AID PROJECT		

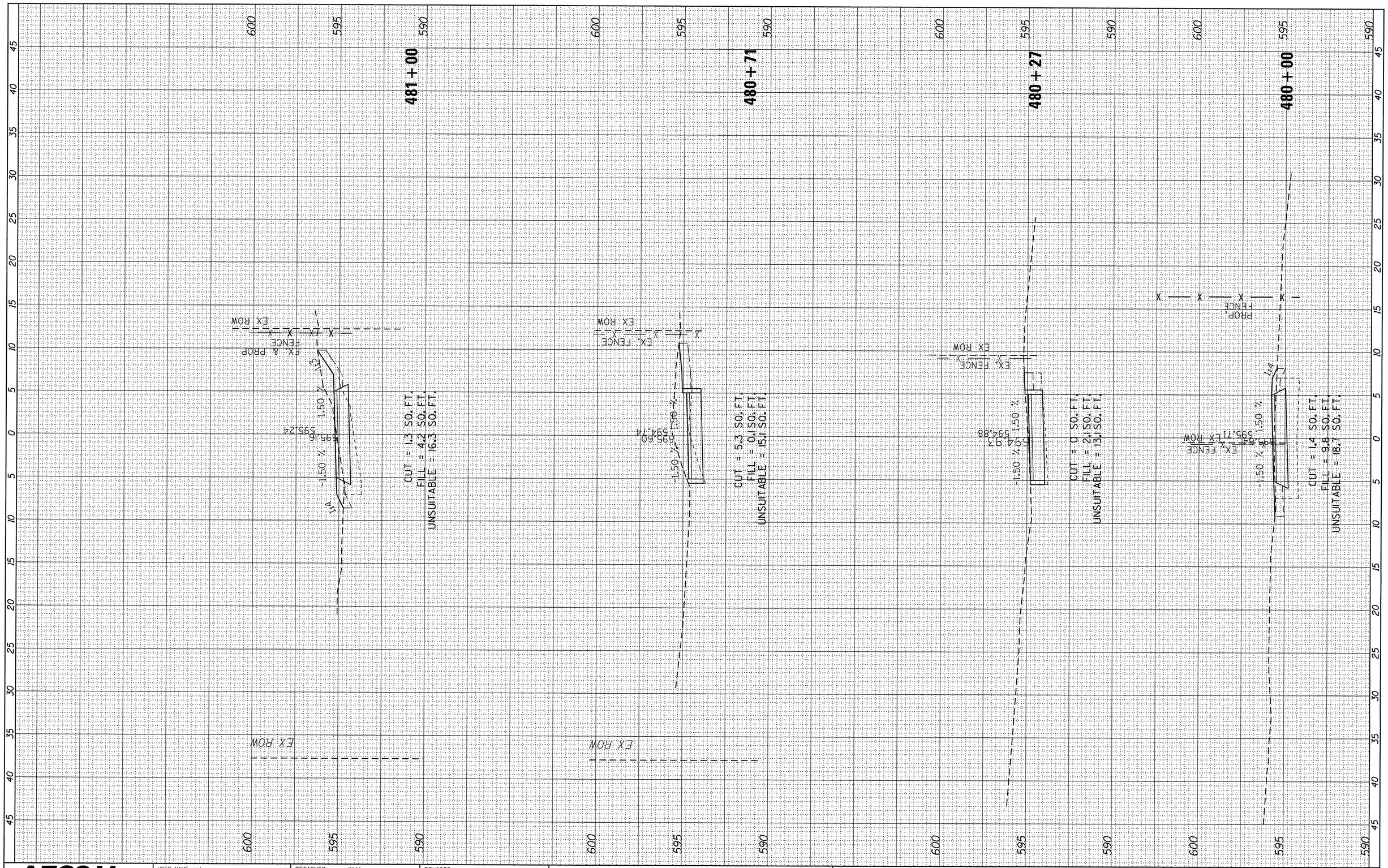

FINAL SURVEY	BY	DATE
SURVEYED		
PLOTTED		
TEMPLATE		
AREAS		
AREAS CHECKED		
NOTE BOOK NO.		

ORIGINAL SURVEY	BY	DATE
SURVEYED		
PLOTTED		
TEMPLATE		
AREAS		
AREAS CHECKED		
NOTE BOOK NO.		

AECOM
303 East Wacker Drive, Suite 1400, Chicago, IL 60601
T 1-312-373-7700 F 1-312-373-6800

USER NAME = ken_moy	DESIGNED - KLM	REVISED -
	DRAWN - KJB	REVISED -
PLOT SCALE = 5.0000 ' / in.	CHECKED - BMC	REVISED -
PLOT DATE = 8/4/2016	DATE - AUGUST 5, 2016	REVISED -

STATE OF ILLINOIS
DEPARTMENT OF TRANSPORTATION

CAL-SAG GREENWAY TRAIL (BLUE ISLAND EAST SEGMENT)
CROSS SECTIONS / BLUE ISLAND EAST

SCALE: | SHEET OF SHEETS | STA. 480+00 TO STA. 480+99

F.A. RTE.	SECTION	COUNTY	TOTAL SHEETS	SHEET NO.
	08-00178-00-BT	COOK	64	61
		CONTRACT NO. 61C12		
		ILLINOIS FED. AID PROJECT		

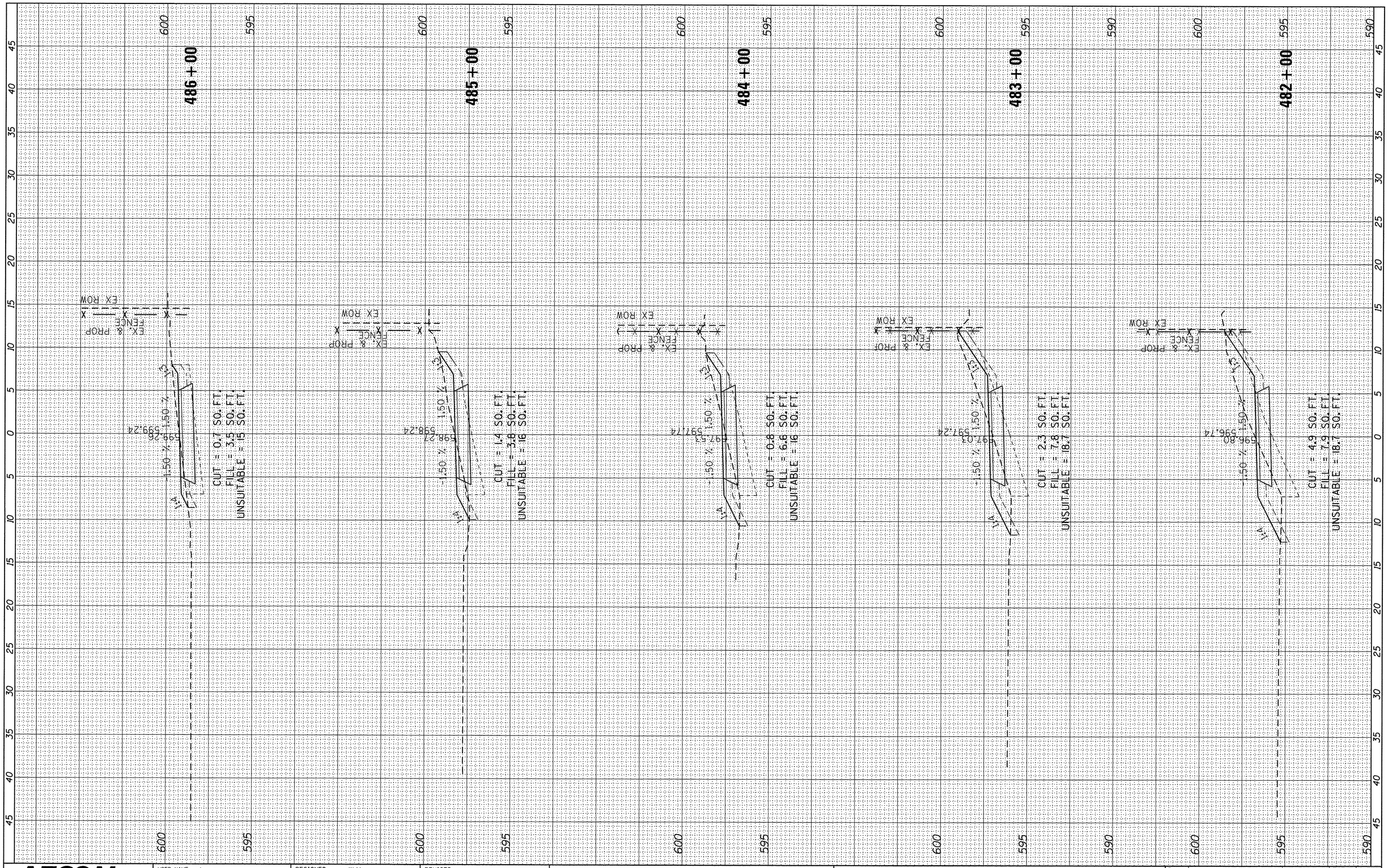

FINAL SURVEY	BY	DATE
SURVEYED		
PLOTTED		
TEMPLATE		
AREAS		
AREAS CHECKED		
NOTE BOOK NO.		

ORIGINAL SURVEY	BY	DATE
SURVEYED		
PLOTTED		
TEMPLATE		
AREAS		
AREAS CHECKED		
NOTE BOOK NO.		

AECOM
303 East Wacker Drive, Suite 1400, Chicago, IL 60601
T 1-312-373-7700 F 1-312-373-6800

USER NAME = ken_moy	DESIGNED - KLM	REVISED -
	DRAWN - KJB	REVISED -
PLOT SCALE = 5.0000 ' / in.	CHECKED - BMC	REVISED -
PLOT DATE = 8/4/2016	DATE - AUGUST 5, 2016	REVISED -

STATE OF ILLINOIS
DEPARTMENT OF TRANSPORTATION

CAL-SAG GREENWAY TRAIL (BLUE ISLAND EAST SEGMENT)
CROSS SECTIONS / BLUE ISLAND EAST

SCALE: | SHEET OF SHEETS | STA. 482+00 TO STA. 486+00

F.A. RTE.	SECTION	COUNTY	TOTAL SHEETS	SHEET NO.
	08-00178-00-BT	COOK	64	62
		CONTRACT NO. 61C12		
		ILLINOIS FED. AID PROJECT		

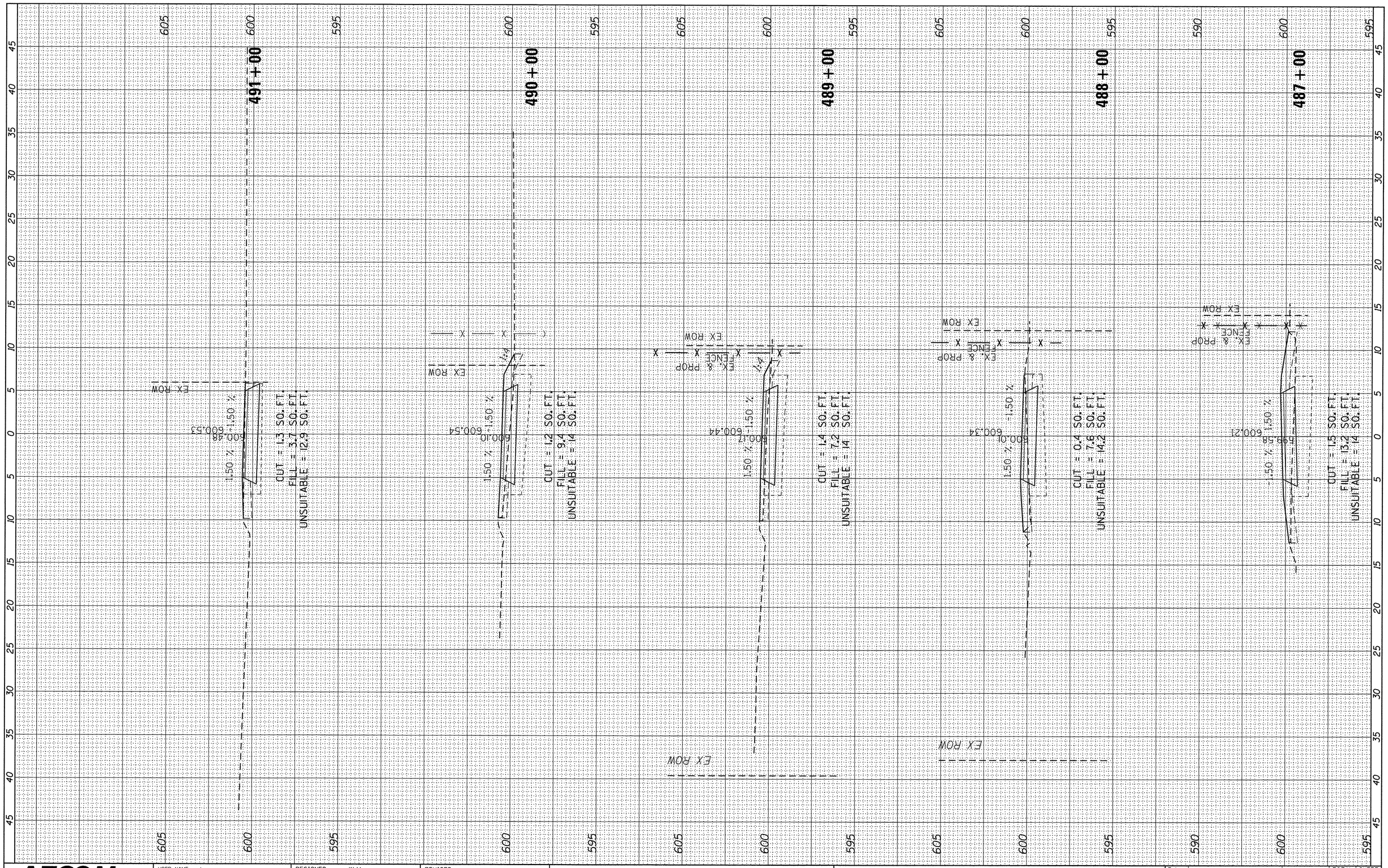

FINAL SURVEY	BY	DATE
SURVEYED		
PLOTTED		
TEMPLATE		
AREAS		
AREAS CHECKED		
NOTE BOOK NO.		

ORIGINAL SURVEY	BY	DATE
SURVEYED		
PLOTTED		
TEMPLATE		
AREAS		
AREAS CHECKED		
NOTE BOOK NO.		

AECOM
303 East Wacker Drive, Suite 1400, Chicago, IL 60601
T 1-312-373-7700 F 1-312-373-6800

USER NAME = ken_moy	DESIGNED - KLM	REVISED -
	DRAWN - KJB	REVISED -
PLOT SCALE = 5.0000 ' / in.	CHECKED - BMC	REVISED -
PLOT DATE = 8/4/2016	DATE - AUGUST 5, 2016	REVISED -

STATE OF ILLINOIS
DEPARTMENT OF TRANSPORTATION

CAL-SAG GREENWAY TRAIL (BLUE ISLAND EAST SEGMENT)
CROSS SECTIONS / BLUE ISLAND EAST

SCALE: | SHEET OF SHEETS | STA. 487+00 TO STA. 491+00

F.A. RTE.	SECTION	COUNTY	TOTAL SHEETS	SHEET NO.
	08-00178-00-BT	COOK	64	63
		CONTRACT NO. 61C12		
		ILLINOIS FED. AID PROJECT		

FINAL SURVEY	BY	DATE
SURVEYED		
PLOTTED		
TEMPLATE		
AREAS		
AREAS CHECKED		

NOTE BOOK NO.

ORIGINAL SURVEY	BY	DATE
SURVEYED		
PLOTTED		
TEMPLATE		
AREAS		
AREAS CHECKED		

NOTE BOOK NO.

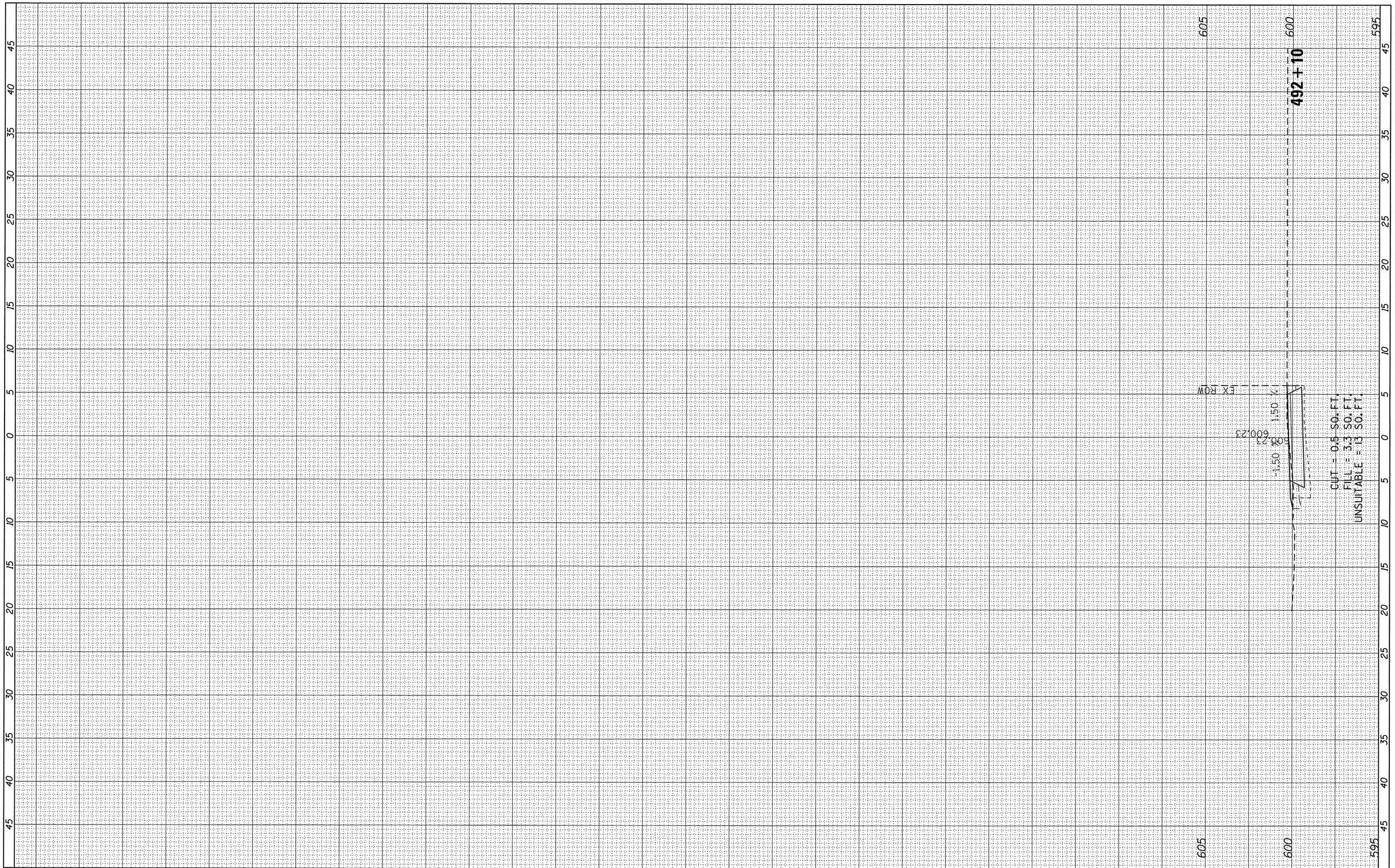

AECOM
303 East Wacker Drive, Suite 1400, Chicago, IL 60601
T 1-312-373-7700 F 1-312-373-6800

USER NAME = ken_moy	DESIGNED - KLM	REVISED -
	DRAWN - KJB	REVISED -
PLOT SCALE = 5.0000 ' / in.	CHECKED - BMC	REVISED -
PLOT DATE = 8/4/2016	DATE - AUGUST 5, 2016	REVISED -

STATE OF ILLINOIS
DEPARTMENT OF TRANSPORTATION

CAL-SAG GREENWAY TRAIL (BLUE ISLAND EAST SEGMENT)
CROSS SECTIONS / BLUE ISLAND EAST

SCALE: | SHEET OF SHEETS | STA. 492+10 TO STA. 492+09

F.A. RTE.	SECTION	COUNTY	TOTAL SHEETS	SHEET NO.
	08-00178-00-BT	COOK	64	64
		CONTRACT NO. 61C12		
		ILLINOIS FED. AID PROJECT		