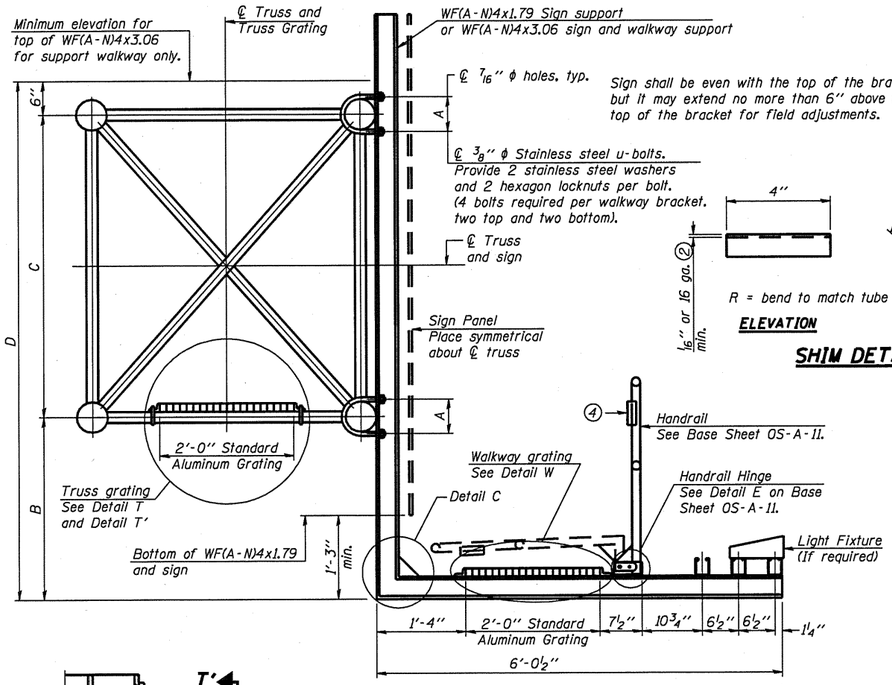

SECTION B-B

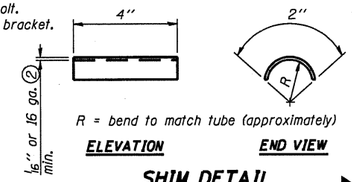

SHIM DETAIL

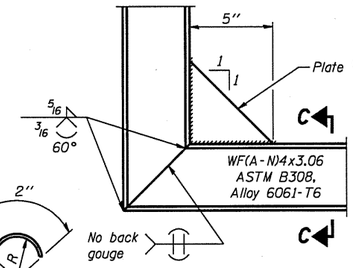

DETAIL C

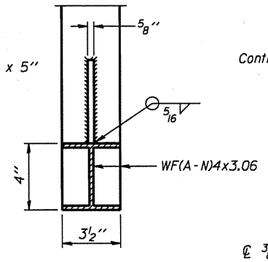

SECTION C-C

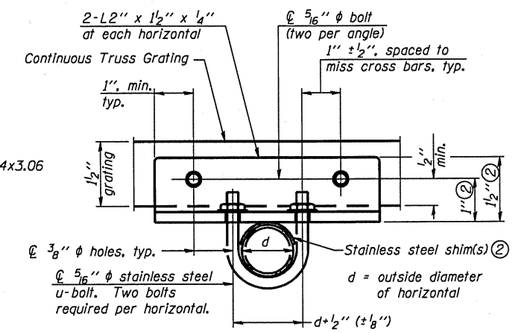

SECTION T-T

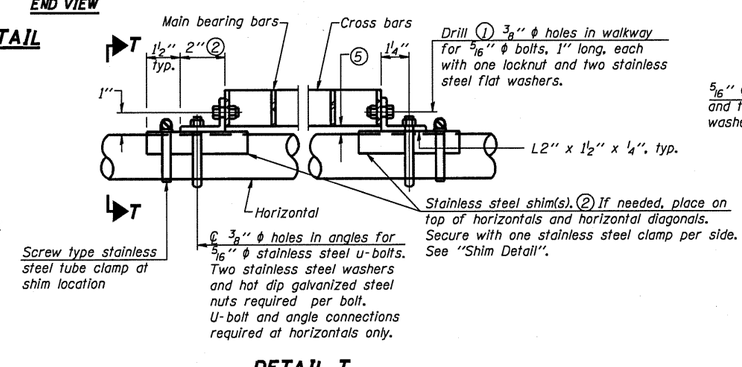

DETAIL T

(Continuous Truss grating)

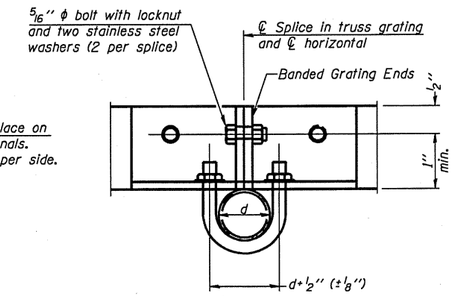

SECTION T'-T'

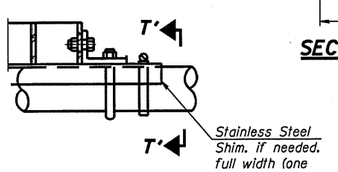

DETAIL T'

(Truss grating splice)
Details not shown same as Detail T.
Alternate materials may be used subject to the Engineer's review and approval.

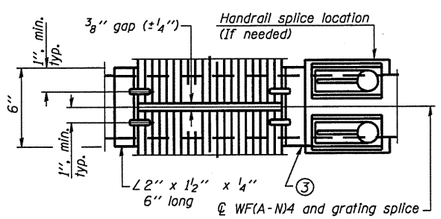

(AT WALKWAY GRATING SPLICE)

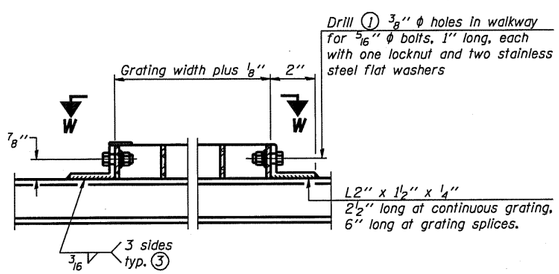

DETAIL W

(Walkway grating)

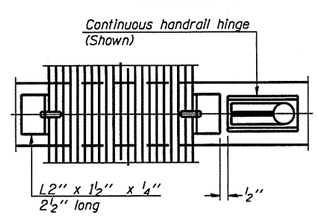

(CONTINUOUS WALKWAY GRATING)

SECTION W-W

SPECIFICATIONS FOR STANDARD ALUMINUM GRATING

Main Bearing Bars shall be 3/16" x 1½" on 1 3/16" centers and conform to ASTM B221 Alloy 6061-T6.

Cross bars shall be 3/16" x 1½" on 4" centers and conform to ASTM B221 Alloy 6063-T5 or 6061-T6.

OR

Aluminum Grating with modified "I" sections for main bearing bars shall meet the following requirements:

Main bars shall conform to ASTM B221 Alloy 6061-T6 and have a minimum section modulus equal to 0.0705 in.³ per bar, a depth of 1½", spaced on 1 3/16" centers.

Cross bars shall conform to ASTM B221 Alloy 6063-T5 or T-42 and spaced on 4" centers.

Structure Number	Station	A	⑥ B	C	⑥ D

① Drilling holes in grating may be done in shop or field, based on Contractor's preference and subject to accurate alignment.

② Stainless steel shims shall be placed as shown in Detail T if needed to compensate for alignment variations between horizontal and diagonal pipes beyond adjustment provided by angles. Thicker shims may be used subject to shims performing properly.

③ If Handrail Joint present, weld angle to WF(A-N)4 and ¼" extension bars. (See Base Sheet OS-A-11.)

④ ℄ ⅛" x ½" x 2" welded to handrail posts to protect locations that contact grating.

⑤ Tube to grating gap may vary from 0 to ½", max. to align walkway, allow for camber, etc.

⑥ Based on actual height of tallest sign given on OS-A-1.

LOCATION 1 AND 2
THIS SHEET FOR INFORMATION ONLY

OS-A-10 7-1-10

FILE NAME = c:\pw_work\pwidot\woodshankrl\d0235124\S131-Details.dgn	USER NAME = woodshankrl	DESIGNED - RON WOODSHANK	REVISED -	STATE OF ILLINOIS DEPARTMENT OF TRANSPORTATION	CANTILEVER SIGN STRUCTURES ALUMINUM WALKWAY DETAILS
		DRAWN - RON WOODSHANK	REVISED -		
	PLOT SCALE = 100.0000 ' / IN.	CHECKED -	REVISED -		
	PLOT DATE = Sep 23, 2010 - 09:35:47 AM	DATE -	REVISED -		SCALE: SHEET NO. 6 OF 7 SHEETS STA. TO STA.

F.A.I. RTE.	SECTION	COUNTY	TOTAL SHEETS	SHEET NO.
VAR	D-3 OVD SIN STR REPL 2011-08	VAR	25	13
		CONTRACT NO. 46131		
		ILLINOIS		