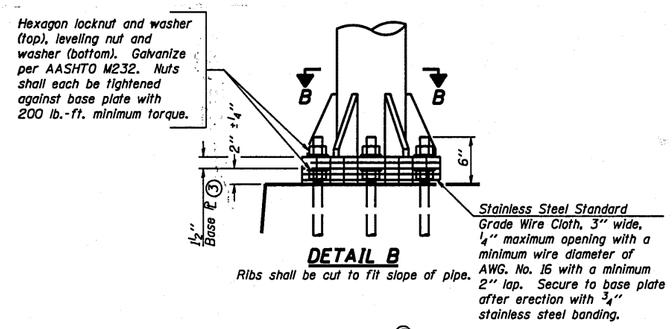

DETAIL B

Ribs shall be cut to fit slope of pipe.

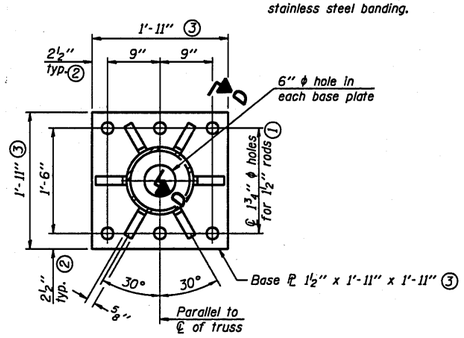

SECTION B-B

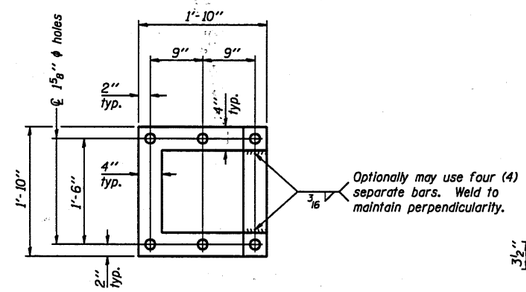

POSITIONING PLATE(S)

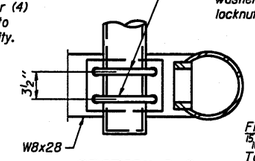

SECTION C-C

(Handhole cover not shown)

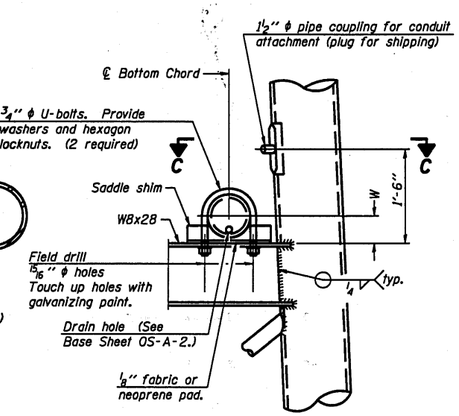

DETAIL C

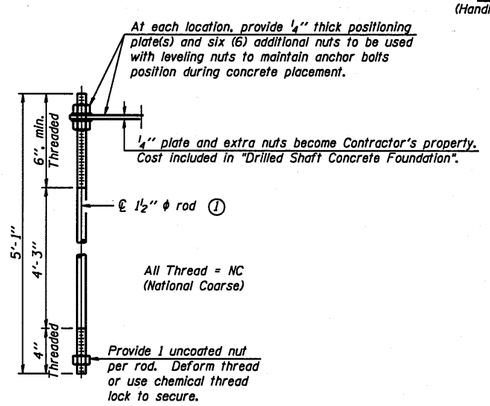

ANCHOR ROD DETAIL

Anchor rods shall conform to AASHTO M314 Grade 36 or 55 and meet Charpy V-Notch (CVN) energy of 15 lb.-ft. at 40° F. Galvanize upper 12" per AASHTO M232. No welding shall be permitted on rods.

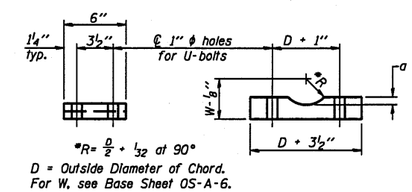

*R= D/2 + 1/32 at 90°

D = Outside Diameter of Chord.
For W, see Base Sheet OS-A-6.

Truss Chord Nominal Dia.	a
7"	1"
8 1/2"	1 1/4"
9"	1 3/8"

SADDLE SHIM DETAIL

ASTM B26 Alloy 356-F
or
ASTM B209 Alloy 6061-T651
(4 required per sign truss)

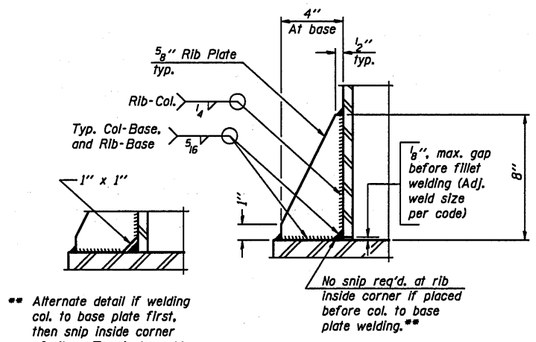

** Alternate detail if welding col. to base plate first, then snip inside corner of ribs. Terminate weld on rib 1/4" from snip.

SECTION D-D

TYPE III-A TRUSS
12" ϕ PIPE SUPPORT FRAME DETAILS

Notes:
For Type III-A Truss spans greater than 150 ft. and up to 160 ft.:

1. 1 3/4" ϕ rod, 2" ϕ holes
2. 2 3/4" edge distance
3. Base ℄ 1 5/8" x 1'-11 1/2" x 1'-11 1/2"

NUMBER	REVISION	DATE

OS4-A-8aA 12-1-08

OVERHEAD SIGN STRUCTURES
SUPPORT FRAME FOR
TYPE III-A ALUMINUM TRUSS

FILE NAME = D:\BR\SIGN TRUSS\CADD Plans\2011 contract\2011 plans.dgn	USER NAME = linkdj	DESIGNED - ___	REVISED - ___
		DRAWN - ___	REVISED - ___
	PLOT SCALE = 100.0000 ' / IN.	CHECKED - ___	REVISED - ___
	PLOT DATE = Tue Aug 03 06:41:04 2010	DATE - _____	REVISED - ___

STATE OF ILLINOIS
DEPARTMENT OF TRANSPORTATION

DISTRICT 2 SIGN
STRUCTURE REPLACEMENT

SCALE: _____ SHEET NO. __ OF ___ SHEETS STA. _____ TO STA. _____

F.A. RTE.	SECTION	COUNTY	TOTAL SHEETS	SHEET NO.
*	**	VARIOUS	27	11
		CONTRACT NO. 46132		
		ILLINOIS FED. AID PROJECT		