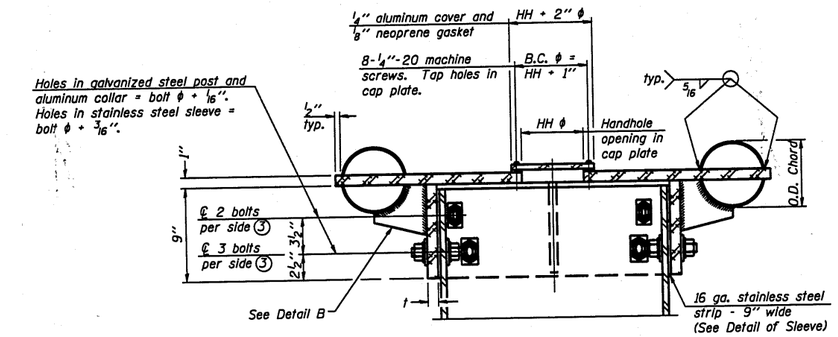

SECTION B-B

Bolts, washers (including contoured washers), and locknuts shall be stainless steel.

(4) Collar I.D. shall be manufactured to correspond to O.D. of actual galvanized post and stainless steel sleeve plus 1/8" (±1/16"). Maximum gap between post and collar at any location equals 1/8" before tightening bolts.

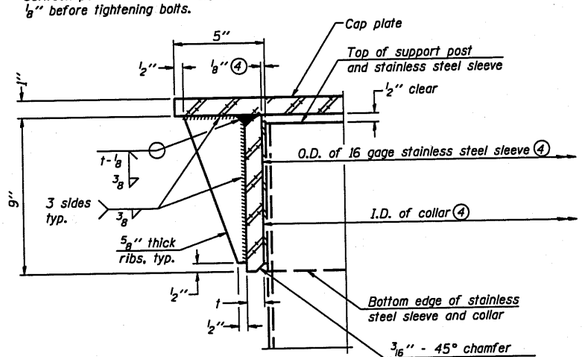

DETAIL A

(Two locations)

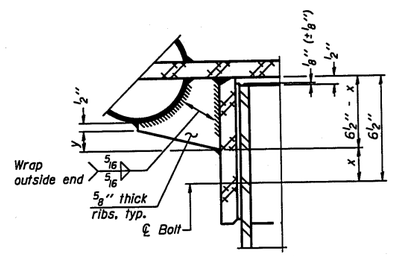

DETAIL B

Two locations
(For details not shown, see Detail C)

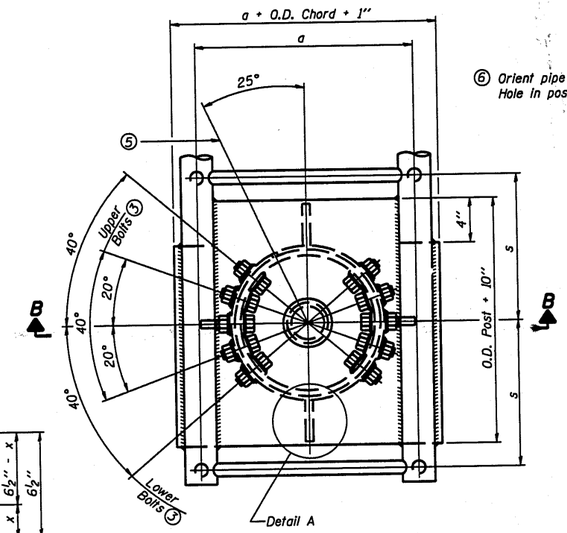

PLAN VIEW - TOP OF COLUMN

(5) Optional full penetration weld in collar.
(Two locations maximum....(180° apart)....X-ray or UT 100%)

(6) Orient pipe toward walkway side. Hole in post = O.D. pipe + 1/8".

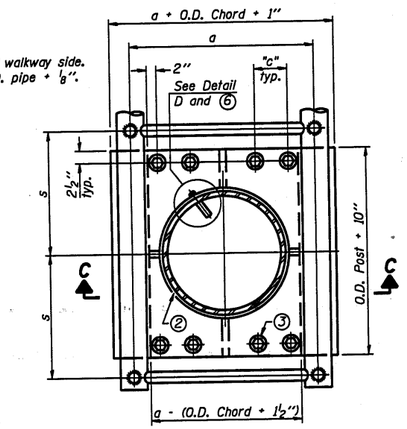

SECTION THRU POST ABOVE LOWER CHORDS

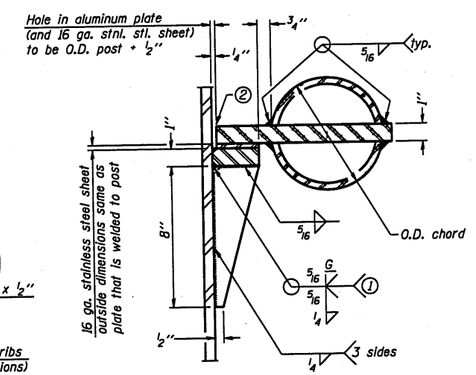

DETAIL C

(1) Grind top if required to fully seat aluminum plate and stainless steel sheet.

(2) After tightening lower connection bolts, fill gap with non-hardening, silicone caulk suitable for exterior exposure and acceptable to the Engineer. Cost is included in Overhead Sign Structure Cantilever.

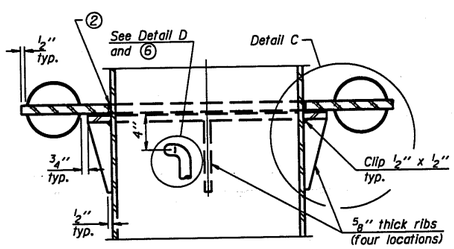

SECTION C-C

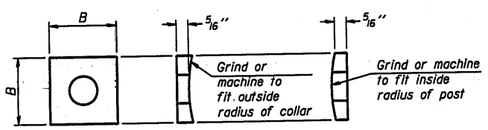

CONTOURED WASHERS

Bolt Size	Contoured Washers	
	Hole Dia.	B
7/8"	1"	2 1/2"
1"	1 1/8"	3"
1 1/4"	1 3/8"	3 1/4"

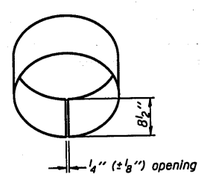

DETAIL OF STAINLESS STEEL SLEEVE

Weld to post after galvanizing.
(Prepare post surface to insure tight, uniform fit and allow welding.)
Welds to be 1 1/2" long at 6" cts. along top edge and at 1/4" opening.

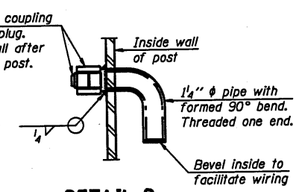

DETAIL D

Truss Type	Post Size	Upper & Lower Connection Bolt Diameter (3)	Lower Juncture Bolt Spacing Dimension "c" (3)	Opening in Cap Plate "HH"	Collar Thickness (t)	Side Ribs	
						x	y
I-C-A	16" ϕ (83#/')	7/8"	3 1/4"	8"	5/8"	1 3/4"	2 1/4"
II-C-A	24" ϕ (125#/')	1"	3 1/2"	12"	7/8"	2"	1 1/4"
III-C-A (35' max.)	24" ϕ (125#/')	1 1/4"	3 1/2"	12"	7/8"	2"	1"
III-C-A (>35' to 40')	24" ϕ (171#/')	1 1/4"	3 1/2"	12"	7/8"	2"	1"

(3) Upper and lower connection bolts in collar and bolts at lower chord connection shall be high strength with matching locknuts. Connection bolts shall have 2 stainless steel flat washers each.

NUMBER	REVISION	DATE

CANTILEVER SIGN STRUCTURES
JUNCTURE DETAILS
ALUMINUM TRUSS & STEEL POST

OSC-A-3 12-1-08

FILE NAME = O:\BR\SIGN TRUSS\CADD Plans\2011 contract\2011 plans.dgn	USER NAME = lnkdj	DESIGNED - ---	REVISED - ---
		DRAWN - ---	REVISED - ---
	PLOT SCALE = 100.0000 ' / IN.	CHECKED - ---	REVISED - ---
	PLOT DATE = Tue Aug 03 06:44:18 2010	DATE - -------	REVISED - ---

STATE OF ILLINOIS
DEPARTMENT OF TRANSPORTATION

DISTRICT 2 SIGN
STRUCTURE REPLACEMENT

SCALE: ------- | SHEET NO. -- OF --- SHEETS | STA. ------- TO STA. -------

F.A. RTE.	SECTION	COUNTY	TOTAL SHEETS	SHEET NO.
*	**	VARIOUS	27	20
		CONTRACT NO. 46132		
		ILLINOIS FED. AID PROJECT		