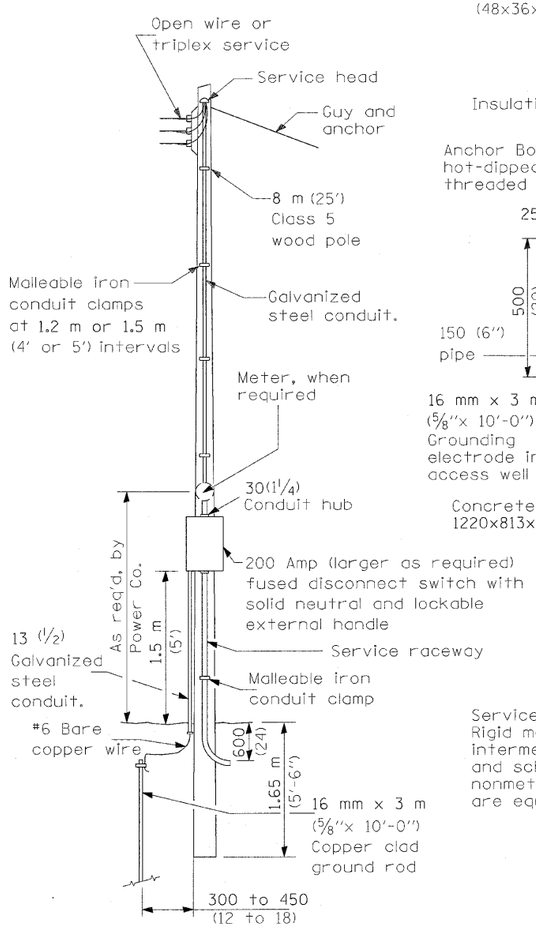

SERVICE POLE

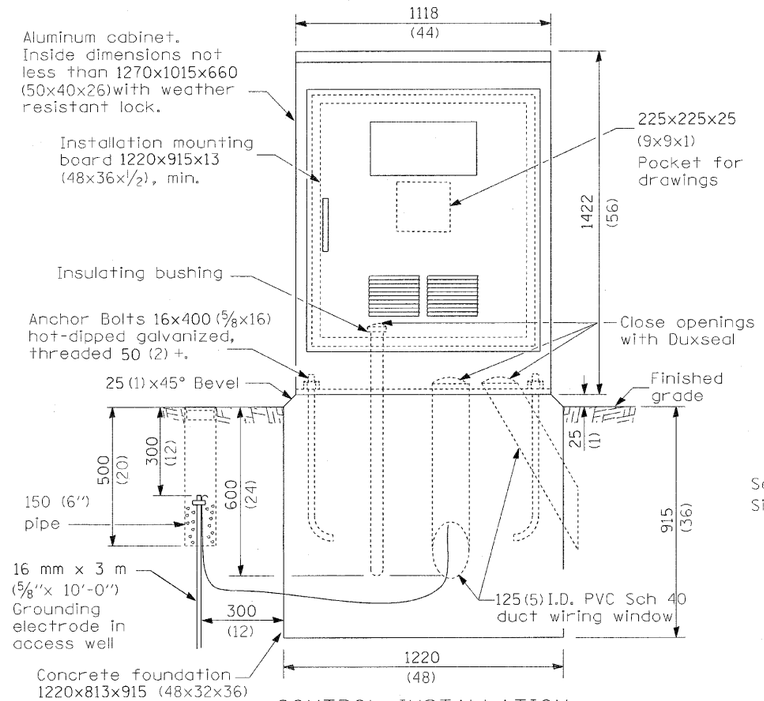

CONTROL INSTALLATION
(FRONT VIEW)

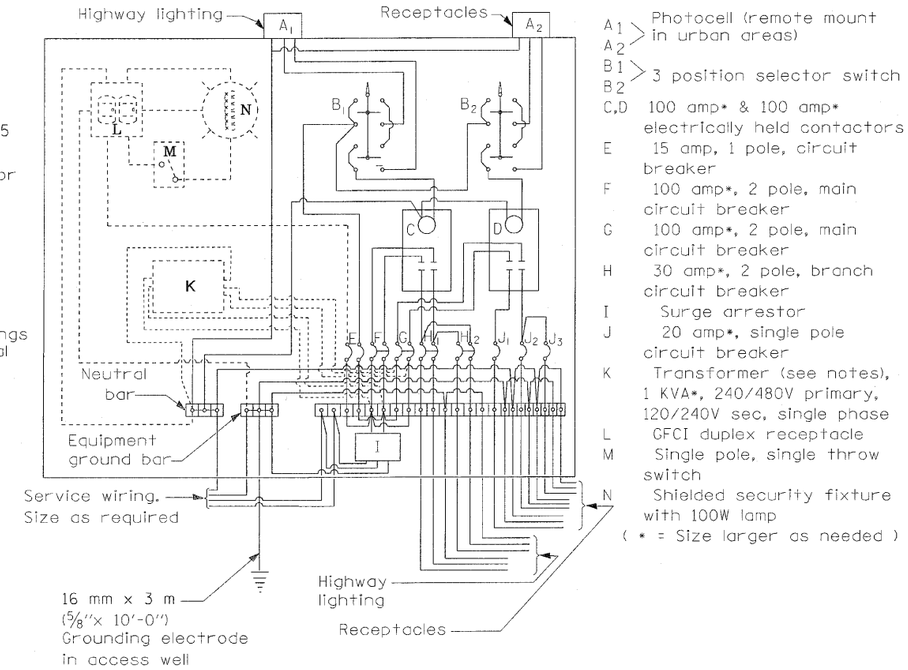

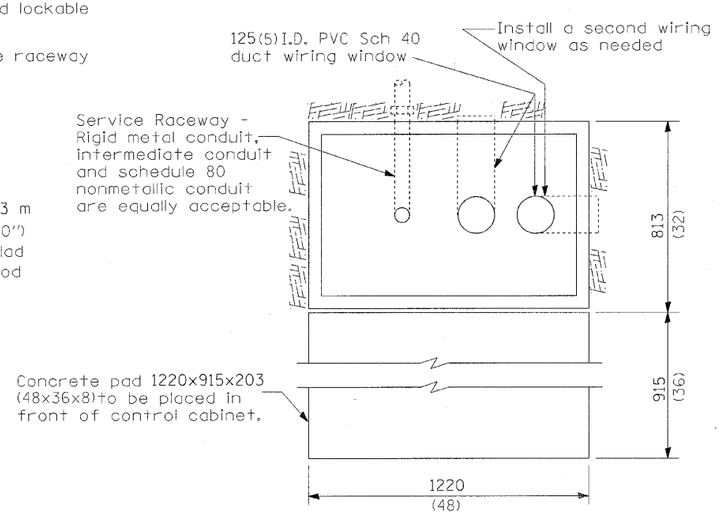

FOUNDATION
(TOP VIEW)

GENERAL NOTES

Wiring shall be panel board fashion. All bends shall be right angles. All runs shall vertical or parallel to panel board. Wires shall be grouped or laced.

All control installation components shall be U.L. listed.

Label equipment ground and neutral.

Locate service pole and control installation adjacent to R.O.W. line with a minimum distance of 9 m (30') from the edge of pavement. Exact location shall be established by the Engineer.

The underground service entrance wiring shall not exceed 46 m (150'). Total aerial and underground service between the control installation and primary transformer shall not exceed 76 m (250').

Raceways shall terminate 75 (3) above top of concrete foundation.

For 480 V service, a step down transformer (dashed lines) is required.

Add receptacle, light, and switch in control cabinet.

Two (2) spare branch breakers are required but are not shown.

All dimensions are in millimeters (inches) unless otherwise shown.

☒ 240 V. SERVICE

☐ 480 V. SERVICE

CONTROL INSTALLATION
Dual Voltage Circuits

FILE NAME = $FILEL$	USER NAME = $USER$	DESIGNED - JM	REVISED -	STATE OF ILLINOIS DEPARTMENT OF TRANSPORTATION	SIDEWALK AND LANDSCAPE LIGHTING PLANS	F.A.S. RTE.	SECTION	COUNTY	TOTAL SHEETS	SHEET NO.
		DRAWN - JB	REVISED -			1279	6R,B	LA SALLE	190	97
TENG & ASSOCIATES, INC. ENGINEERS/ARCHITECTS/PLANNERS CHICAGO, ILLINOIS	PLOT SCALE = $SCALE$	CHECKED - RS	REVISED -					CONTRACT NO. 66547		
	PLOT DATE = 8-24-2010	DATE - 08/10	REVISED -		SCALE: N/A SHEET NO. OF SHEETS STA. TO STA.	FED. ROAD DIST. NO.	ILLINOIS	FED. AID PROJECT		

-\C36567-BORDER.DGN 8-24-2010 14:29:48 BORDHUJO \\FS-0044\VM\VAULTD-TRANS.07\2202\20477-001\CIVIL\C001C36567\SHEET\D3C36567-SHT-ROADDETAIL.DGN