STATE OF ILLINOIS
DEPARTMENT OF TRANSPORTATION

Notes:
See sheet 12 of 26 for Detail A.
Approach slab shall be paid for as Concrete Superstructure.
Approach footing concrete shall be paid for as Concrete Structures.
Reinforcement shall be paid for as Reinforcement Bars, Epoxy Coated.
For v(E) bar details, see sheets 10 & 11 of 26.
The approach footing maximum applied service bearing pressure (Qmax) = 2.0 ksf.
For bar splicer details, see sheet 21 of 26.
Cost of excavation for approach footing included with Concrete Structures.
For Porous Granular Embankment (Special) and drainage treatment details, see sheet 2 of 26.

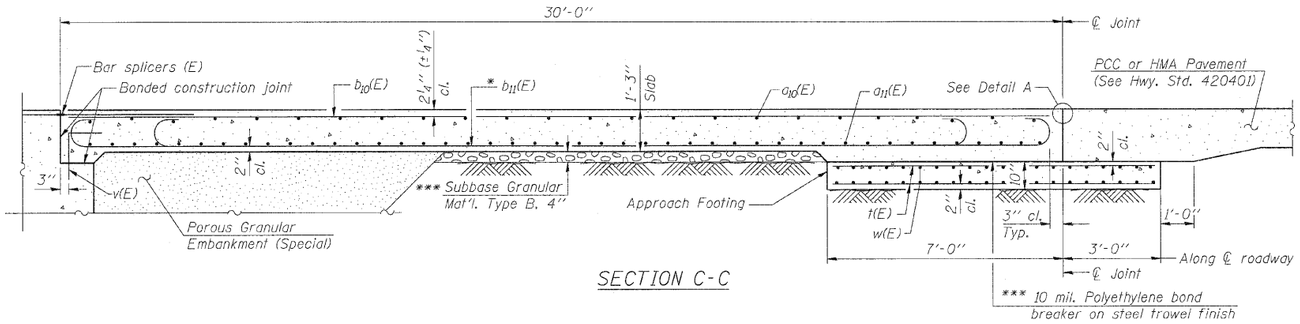

SECTION C-C

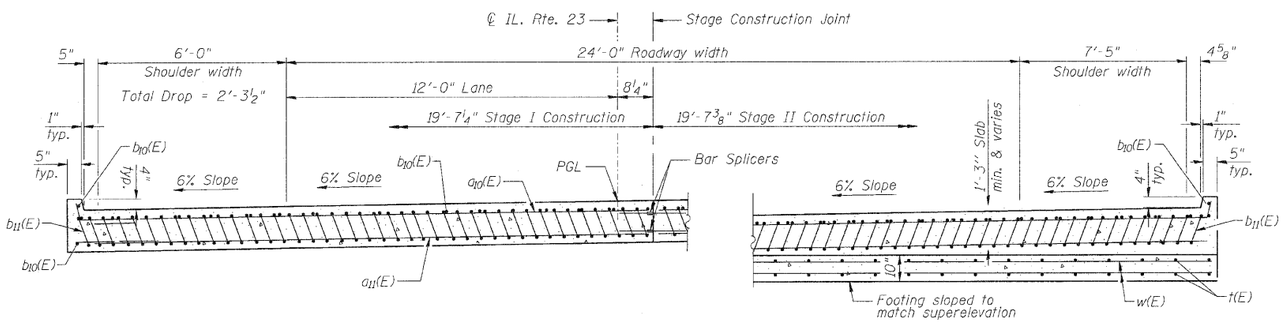

NEAR ABUTMENT

AT APPROACH FOOTING

SECTION D-D

Horizontal dimensions are radial
(See Plan for dimensions not shown)

* Tilt #9 b_{11}(E) bars as required to maintain clearance.

*** Cost included with Concrete Superstructure.

TWO APPROACHES
BILL OF MATERIAL

Bar	No.	Size	Length	Shape
a_{10}(E)	100	#4	19'-9"	
a_{11}(E)	184	#5	19'-3"	
b_{10}(E)	72	#4	29'-8"	
b_{11}(E)	188	#9	29'-9"	
t(E)	160	#4	9'-8"	
w(E)	160	#5	19'-4"	
Concrete Superstructure			Cu. Yd.	112.4
Concrete Structures			Cu. Yd.	23.7
Reinforcement Bars, Epoxy Coated			Pound	29,720

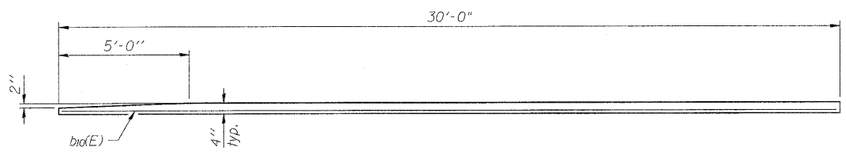

VIEW E-E

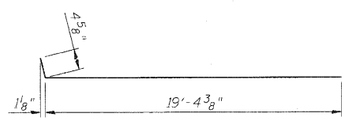

BAR a_{10}(E)

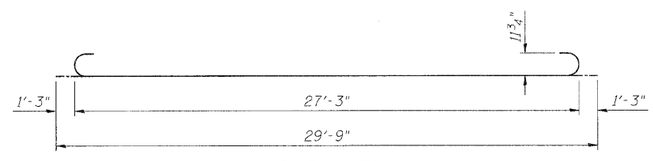

BAR b_{11}(E)

ZROKA engineering
Zroka Engineering, P.C.
4216 North Hermitage
Chicago, IL 60613

DESIGNED	LAS
CHECKED	JLA
DRAWN	SAW
CHECKED	LAS

BA-0 11-1-09

(Sheet 2 of 2)
BRIDGE APPROACH SLAB DETAILS
STRUCTURE NO. 053-0189

SHEET NO. 13 OF 26 SHEETS	F.A.P. RTE.	SECTION	COUNTY	TOTAL SHEETS	SHEET NO.
	68	(102)BR-1	LIVINGSTON	58	24
	SN 053-0189		CONTRACT NO. 66822		
	FED. ROAD DIST. NO.	ILLINOIS	FED. AID PROJECT		

8/2/2010 10:41:25 AM C:\Drawings\5600-10\ShortPathCr\66822-013-Appr SlabDetails2.dgn