STATE OF ILLINOIS
DEPARTMENT OF TRANSPORTATION

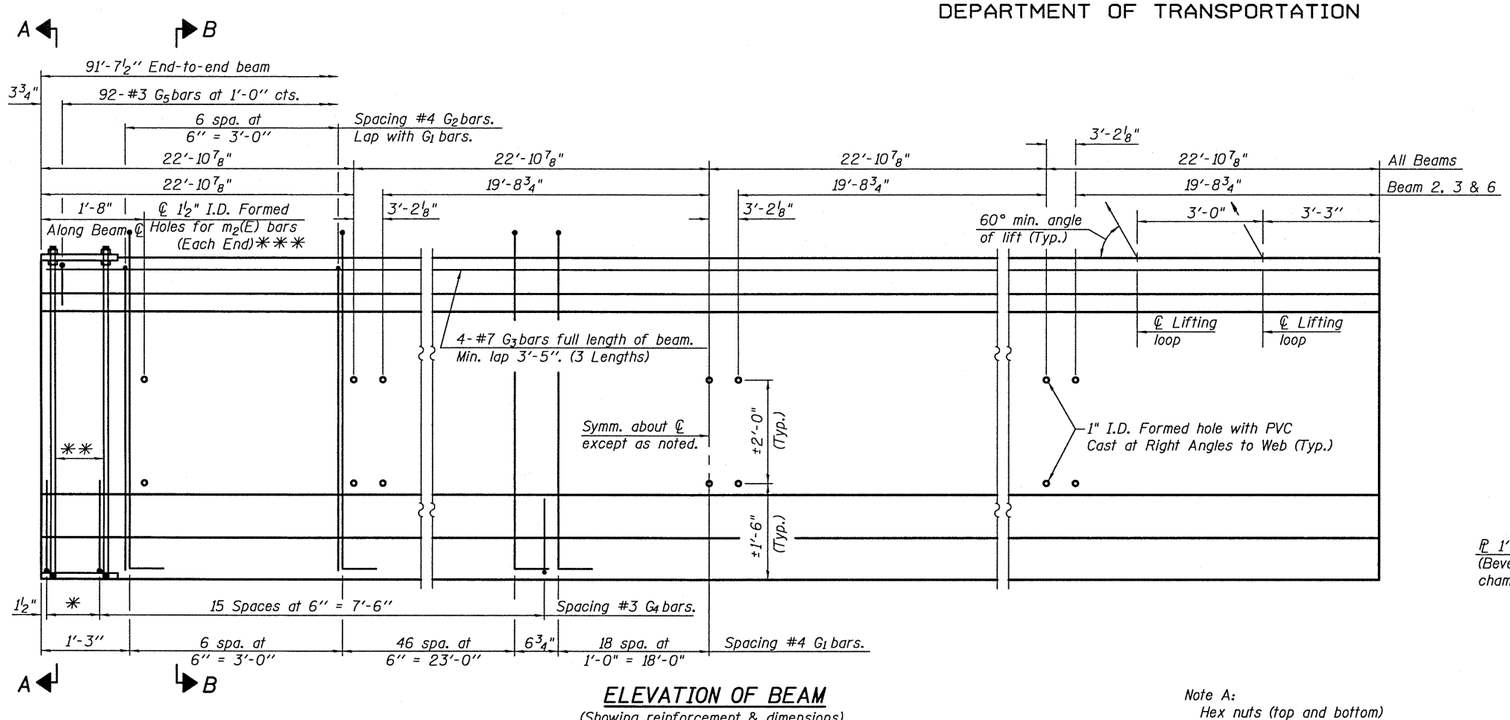

ELEVATION OF BEAM
(Showing reinforcement & dimensions)

* 3 spaces at 3" = 9".
** 4-¾" ϕ threaded dowel rods at 3" cts., Each Face.
*** Holes to be formed along skew.

Note A:
Hex nuts (top and bottom) with lock washers (top). Only tighten sufficiently to compress lock washers.

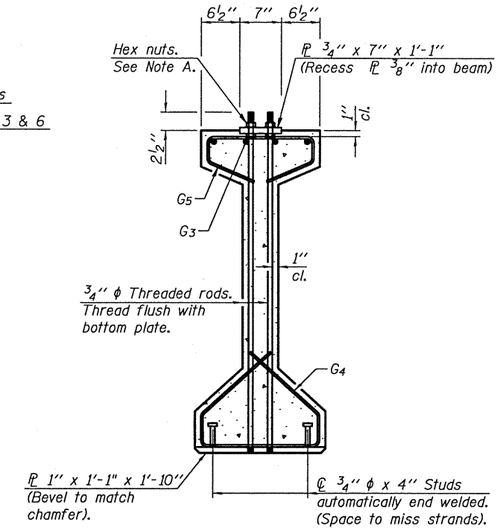

SECTION A-A

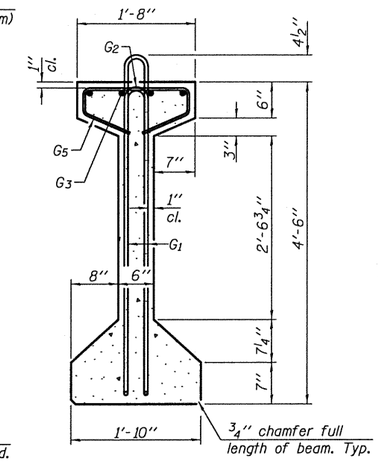

SECTION B-B

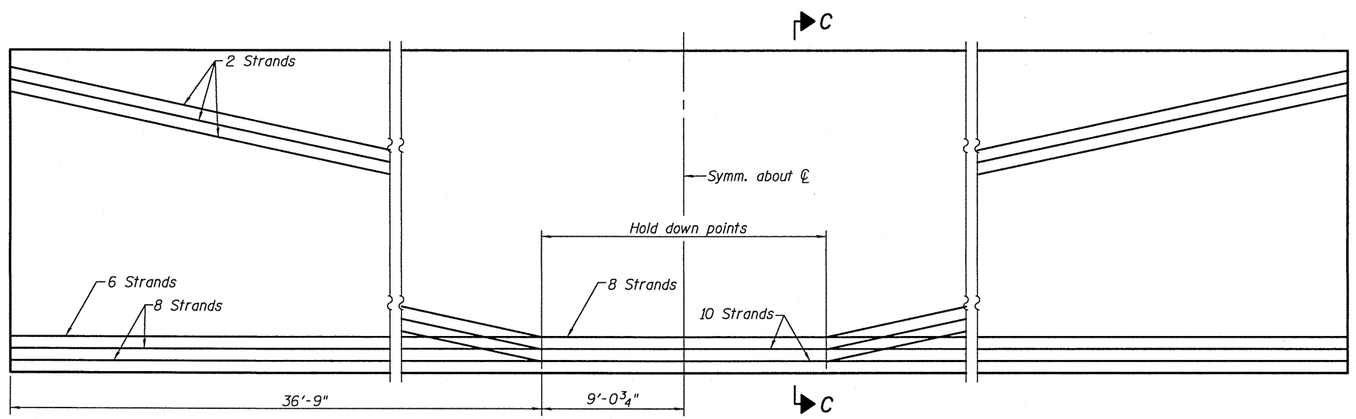

ELEVATION OF BEAM
(Showing prestressing steel)

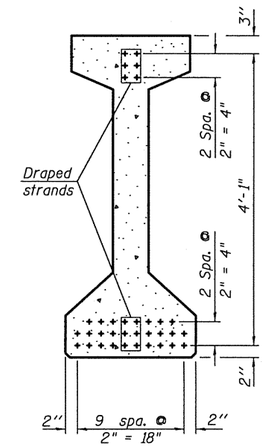

SECTION C-C

******BAR LIST**
ONE BEAM ONLY

Bar	No.	Size	Length	Shape
G_1	143	#4	10'-5"	
G_2	14	#4	8'-8"	
G_3	12	#7	32'-10"	
G_4	38	#3	4'-11"	
G_5	92	#3	3'-5"	

**** For information only

Notes:
See sheet 12 of 22 for additional details and Bill of Material.
Required release strength, f'ci, shall be 5,000 psi.
f'c = 6,000 psi

DESIGNED	RRD
CHECKED	AJS
DRAWN	KAS
CHECKED	AJS

PI-4-54 10-1-08

54" P.P.C. I-BEAM BEAM DETAILS (1 OF 2)
S.N. 090-0177
STRAND ASSOCIATES, INC.

SHEET NO. 11	F.A.P. RTE.	SECTION	COUNTY	TOTAL SHEETS	SHEET NO.
22 SHEETS	693	(119 BR-2)BR	TAZEWELL	65	28
			CONTRACT NO. 68660		
	FED. ROAD DIST. NO.	ILLINOIS	FED. AID PROJECT		