STATE OF ILLINOIS

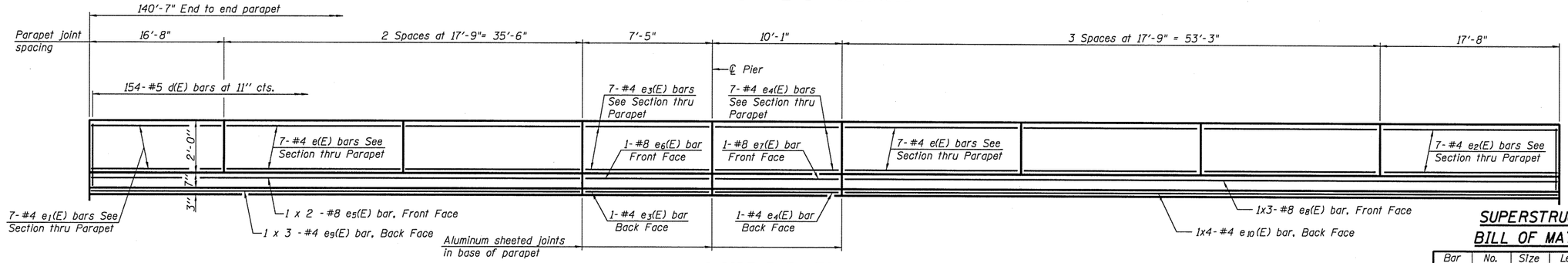

INSIDE ELEVATION OF PARAPET

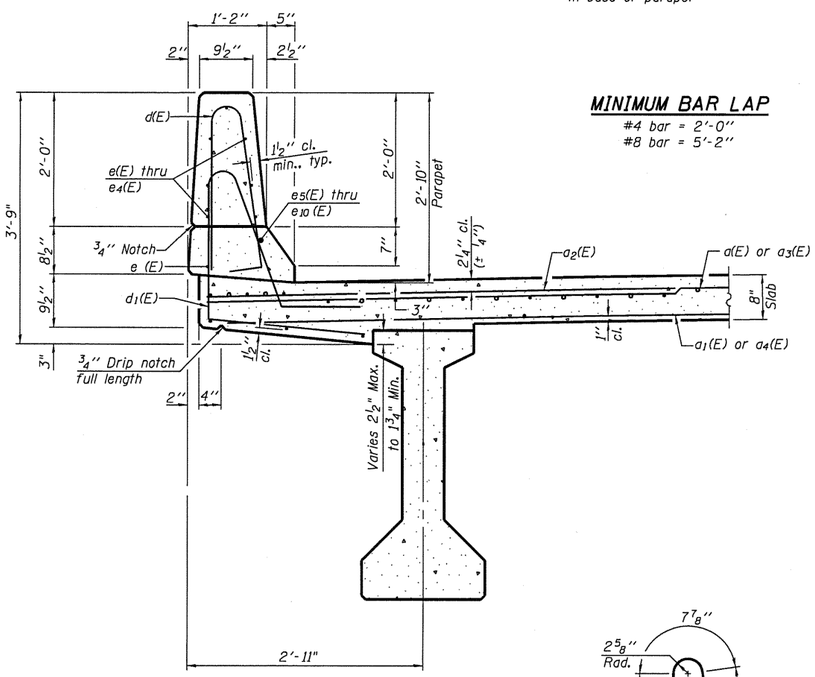

SECTION THRU PARAPET

MINIMUM BAR LAP

#4 bar = 2'-0"
#8 bar = 5'-2"

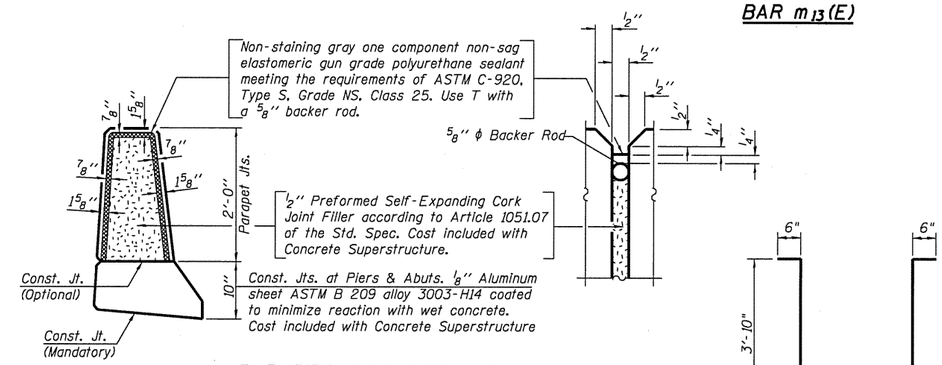

PARAPET JOINT DETAILS

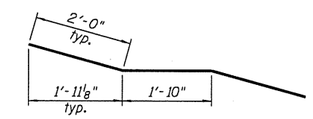

BAR m13(E)

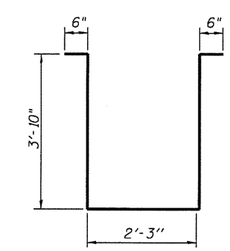

BAR s2(E)

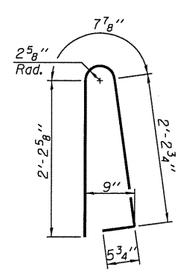

BAR d(E)

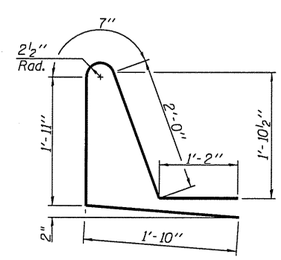

BAR d1(E)

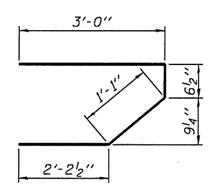

BAR s(E)

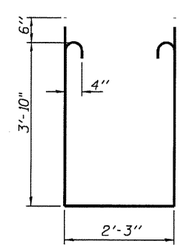

BAR s1(E)

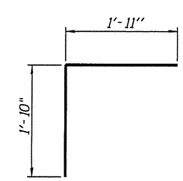

BAR v(E)

SUPERSTRUCTURE BILL OF MATERIAL

Bar	No.	Size	Length	Shape
a(E)	239	#5	17'-7"	
a1(E)	167	#5	17'-3"	
a2(E)	480	#6	6'-6"	
a3(E)	239	#5	20'-7"	
a4(E)	167	#5	20'-3"	
a5(E)	4	#5	18'-0"	
a6(E)	4	#5	21'-3"	
b(E)	210	#6	31'-2"	
b1(E)	74	#7	36'-3"	
b2(E)	186	#7	27'-9"	
d(E)	308	#5	5'-7"	
d1(E)	308	#5	7'-6"	
e(E)	70	#4	17'-5"	
e1(E)	14	#4	16'-4"	
e2(E)	14	#4	17'-4"	
e3(E)	16	#4	7'-1"	
e4(E)	16	#4	9'-9"	
e5(E)	4	#8	28'-6"	
e6(E)	2	#8	7'-1"	
e7(E)	2	#8	9'-9"	
e8(E)	6	#8	27'-0"	
e9(E)	6	#4	18'-8"	
e10(E)	8	#4	19'-2"	
m(E)	4	#6	17'-5"	
m1(E)	4	#6	20'-6"	
m2(E)	6	#6	18'-4"	
m3(E)	6	#6	21'-5"	
m4(E)	12	#6	8'-5"	
m5(E)	12	#6	9'-5"	
m6(E)	16	#6	4'-8"	
m7(E)	4	#6	1'-9"	
m8(E)	4	#6	0'-8"	
m9(E)	4	#6	3'-9"	
m10(E)	16	#4	5'-6"	
m11(E)	4	#4	1'-0"	
m12(E)	4	#4	4'-2"	
m13(E)	6	#8	5'-10"	
s(E)	72	#5	6'-10"	
s1(E)	62	#4	10'-11"	
s2(E)	25	#4	10'-11"	
v(E)	76	#5	3'-9"	
Reinforcement Bars, Epoxy Coated		Lbs.	56,100	
Concrete Superstructure		Cu. Yds.	208	

Bars indicated thus 1 x 3 -#5 etc. indicates 1 line of bars with 3 lengths per line.

DESIGNED	C.M.W.
CHECKED	J.S.A.
DRAWN	T.J.W.
CHECKED	C.M.W.

PI-I-D 7-1-10

HOELSCHER ENGINEERING
Fairview Heights, IL
Springfield, IL
Champaign, IL

SUPERSTRUCTURE DETAILS
STRUCTURE NO. 086-0505

SHEET NO. 10 of 26 SHEETS	F.A.P. RTE.	SECTION	COUNTY	TOTAL SHEETS	SHEET NO.
	566	1(B-2)	SCOTT	77	37
			CONTRACT NO. 72B91		
	FED. ROAD DIST. NO.	ILLINOIS	FED. AID PROJECT		