STATE OF ILLINOIS
DEPARTMENT OF TRANSPORTATION

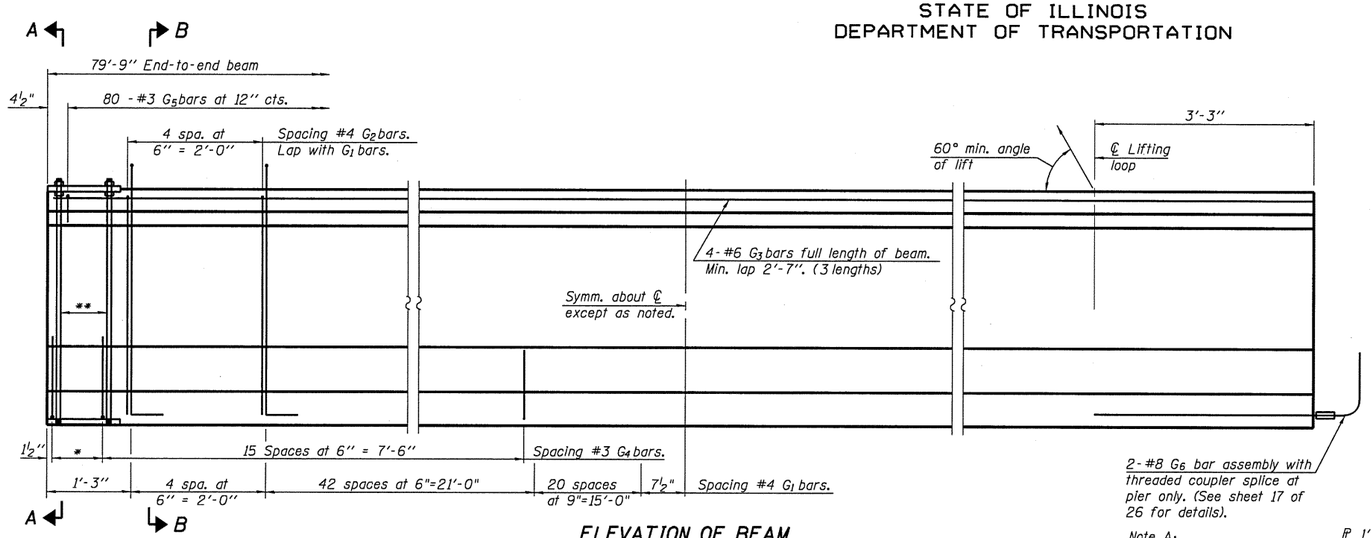

*3 spaces at 3" = 9".
**4-¾" ϕ threaded dowel rods at 3" cts., Each Face.

ELEVATION OF BEAM
(Showing reinforcement & dimensions)

Note A:
Hex nuts (top and bottom) with lock washers (top). Only tighten sufficiently to compress lock washers.

****See Details on sheet 13 of 23 sheets for number and location of holes

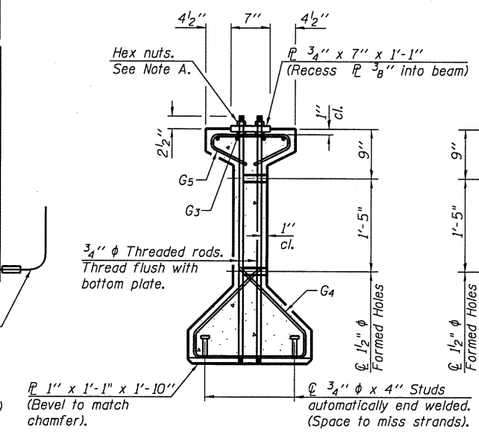

SECTION A-A

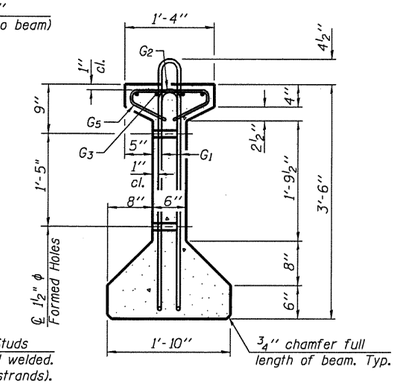

SECTION B-B

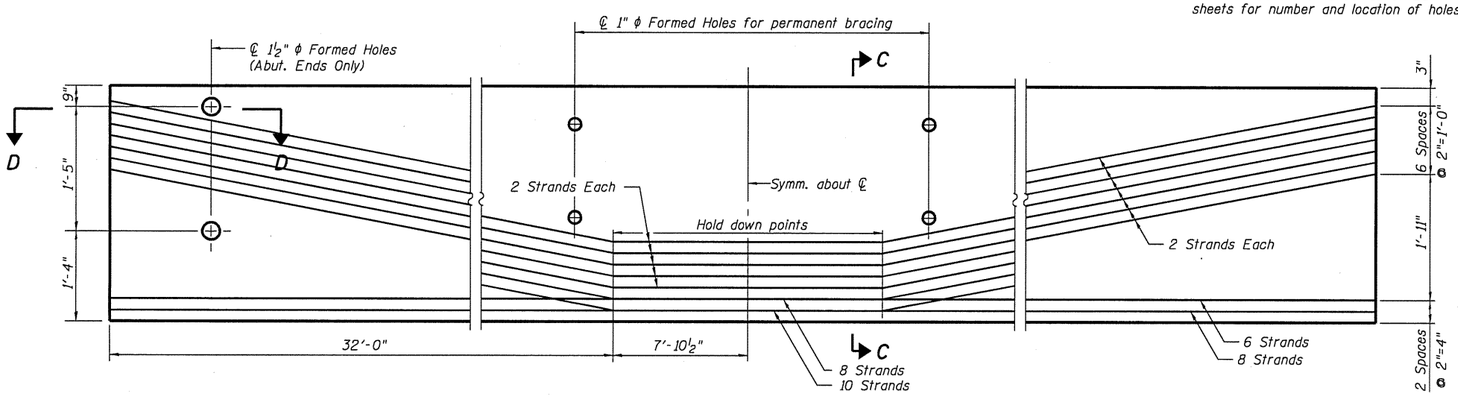

ELEVATION OF BEAM
(Showing prestressing steel)

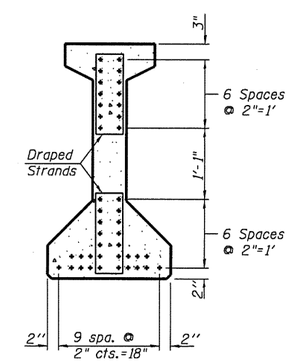

SECTION C-C

***BAR LIST
ONE BEAM ONLY

Bar	No.	Size	Length	Shape
G_1	136	#4	8'-5"	
G_2	10	#4	6'-8"	
G_3	12	#6	28'-3"	
G_4	38	#3	4'-11"	
G_5	80	#3	2'-6"	
G_6	2	#8	6'-6"	

***For information only

Notes:
See sheet 17 of 26 for additional details and Bill of Material.
Required release strength, f'ci, shall be 6000 psi.

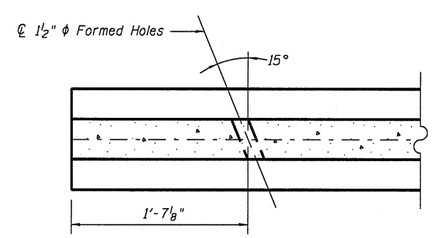

SECTION D-D

SPAN 2
42" PPC I-BEAM
STRUCTURE NO. 086-0505

DESIGNED	C.M.W.
CHECKED	J.S.A.
DRAWN	T.J.W.
CHECKED	C.M.W.

HOELSCHER ENGINEERING
Fairview Heights, IL
Springfield, IL
Champaign, IL

PI-4-42 7-1-10

SHEET NO. 16 of 26 SHEETS	F.A.P. RTE.	SECTION	COUNTY	TOTAL SHEETS	SHEET NO.
	566	1(B-2)	SCOTT	77	43
			CONTRACT NO. 72B91		
	FED. ROAD DIST. NO.	ILLINOIS	FED. AID PROJECT		

Hoelscher Engineering, P.C. - 115 N. Neil Street - Suite 105 - CHAMPAIGN, IL 61820 - PHONE: (217) 351-8610