STATE OF ILLINOIS
DEPARTMENT OF TRANSPORTATION

ROUTE NO.	SECTION	COUNTY	TOTAL SHEETS	SHEET NO.
S.B.I. F.A.14	W-14BI	ST CLAIR	23	22
FED. ROAD DIST. NO. 7	ILLINOIS	FED. AID PROJECT-		

SHEET NO. 18
18 SHEETS

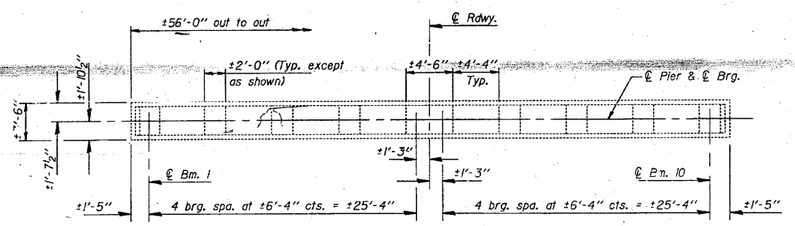

TOP PLAN

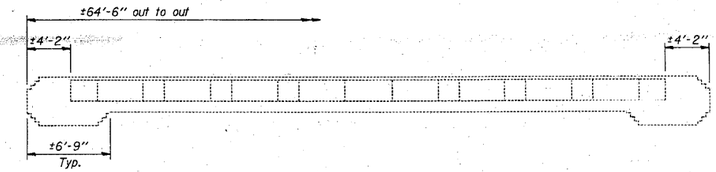

TOP PLAN

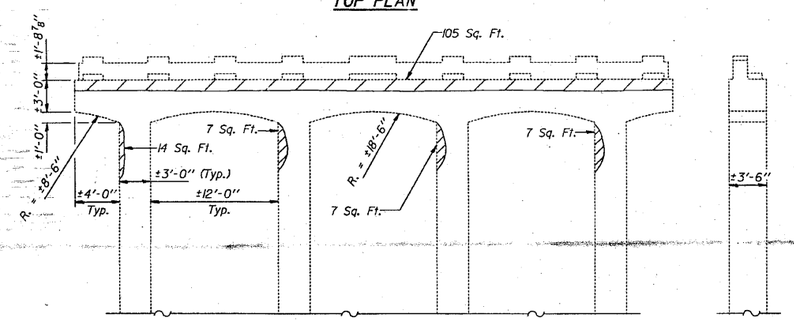

ELEVATION-PIER 3
(Looking North)

END VIEW

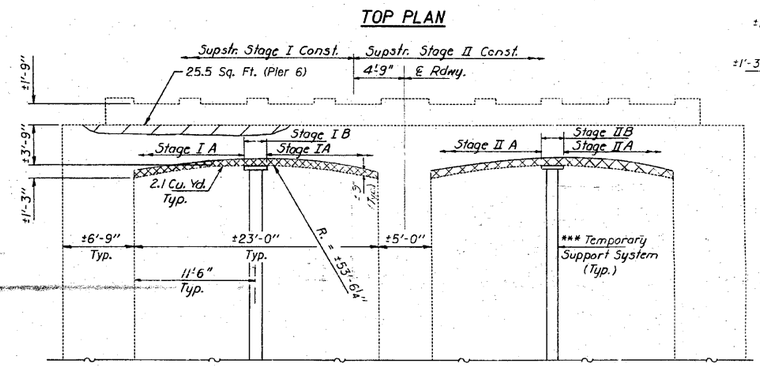

ELEVATION-PIER 6 & PIER 7
(Looking North)

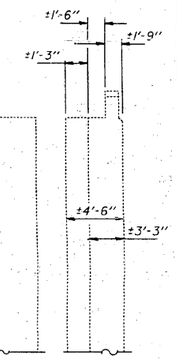

END VIEW

Repair Concrete Structures
Concrete Removal

Note: Remove ±9" of deteriorated concrete from bottom of caps at Piers 6 and 7. Clean exposed reinforcement bars and pour new Class X Concrete.
Stage IA and IB are to be done during superstructure Stage I Construction. IA to be done first and IB to be done second.
Stage IIA and IIB are to be done during superstructure Stage II Construction. IIA to be done first and IIB to be done second.

*** To be in place prior to undertaking any concrete removal. The Temporary Support System shall be designed by the Contractor and the drawings submitted to the Engineer for approval. The Contractor may submit an alternate procedure to provide temporary support for the pier caps.

Temporary Support System shall be removed prior to Stage IB & Stage IIB Construction.

DESIGNED	Dennis Bolin
CHECKED	David Murphy
DRAWN	R. Doty
CHECKED	DG

Feb. 4 1985
STRAINED James T. Graham
PASSED James T. Graham
APPROVED
ENGINEER OF BRIDGE AND STRUCTURES
DIRECTOR OF HIGHWAYS

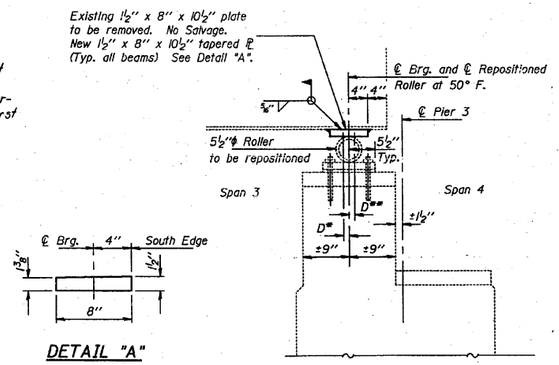

DETAIL "A"

SECTION THRU PIER 3
(Showing bearing plate removal and replacement in Span 3)

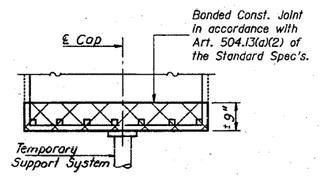

DETAIL "B"

Notes on Repositioning of Rollers:
D* (Side of brg. toward fixed brg.)
D* = 1/16" per 100' of expansion for every 15° fall below the normal temperature of 50° F.

D** (Side of brg. away from fixed brg.)
D** = 1/16" per 100' of expansion for every 15° rise above the normal temperature of 50° F.

Notes:
Procedure for Repositioning Bearings:
1. Apply jacking force to raise the beam ends to a maximum of ⅛". ℙ reaction per beam = 18.5 K.
2. Remove existing top bearing plate.
3. Reposition roller and rotate 90°.
4. Install new top bearing plate and center over bottom bearing plate.
5. Remove jacking force.

Note:
Bearings are to be repositioned prior to longitudinal joint reconstruction. See sheet #2 for staging.

BILL OF MATERIAL

Item	Unit	Total
Repair Concrete Structures	Sq. Ft.	165
Jack and Reposition Bearings	Each	10
Structural Steel	Lbs.	360
Class X Concrete	Cu. Yd.	8.4
Concrete Removal	Cu. Yd.	8.4
Temporary Support System	L. Sum	1

PIER REPAIR DETAILS
F.A. RT. 14 SEC. 64-IVBI
ST. CLAIR COUNTY
STA. 281+07.13

FOR INFORMATION ONLY

Coombe-Bloxdorf P.C.
-CIVIL ENGINEERS-
-STRUCTURAL ENGINEERS-
-LAND SURVEYORS-
Design Firm License No. 184-002703

FILE NAME =	USER NAME = CFC__	DESIGNED -	REVISED -
...\159-0876882-exist-bridge-repair-plans-29.dgn		DRAWN -	REVISED -
	PLOT SCALE = 40.000000 ' / IN.	CHECKED -	REVISED -
CB JOB NO 09021	PLOT DATE = 8/5/2010	DATE - / /	REVISED -

STATE OF ILLINOIS
DEPARTMENT OF TRANSPORTATION

SN 082-0030 PLANS
(REHABILITATION PLANS)

SCALE: | SHEET NO. OF SHEETS | STA. TO STA.

F.A.P. RTE.	SECTION	COUNTY	TOTAL SHEETS	SHEET NO.
312	64-1VBR	ST. CLAIR	259	159

CONTRACT NO. 76882
ILLINOIS FED. AID PROJECT