STAGING TYPICAL SECTIONS

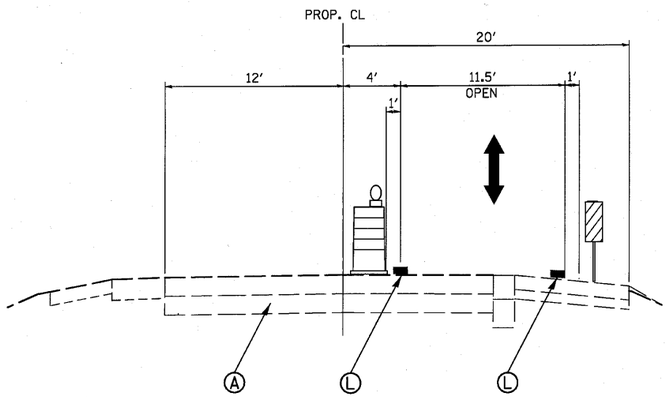

STAGE 1
LANE SHIFT

STA. 935+71 TO STA. 937+25
STA. 949+68 TO STA. 951+60

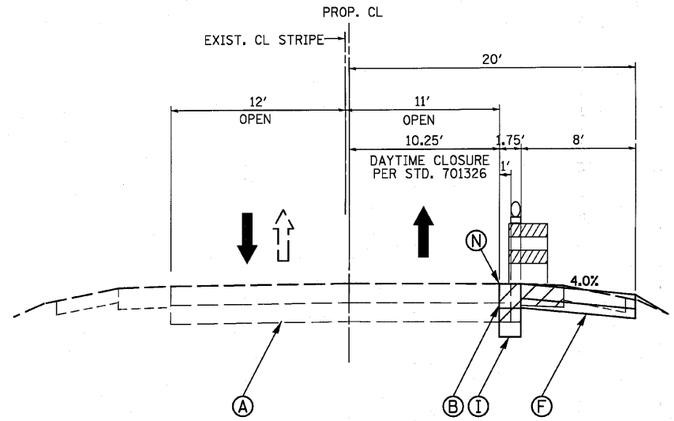

STAGE 1A
BASE COURSE WIDENING AND SHOULDER CONSTRUCTION

BASE COURSE WIDENING/SHOULDER: STA. 936+40 TO STA. 939+99
STA. 946+78 TO STA. 950+32

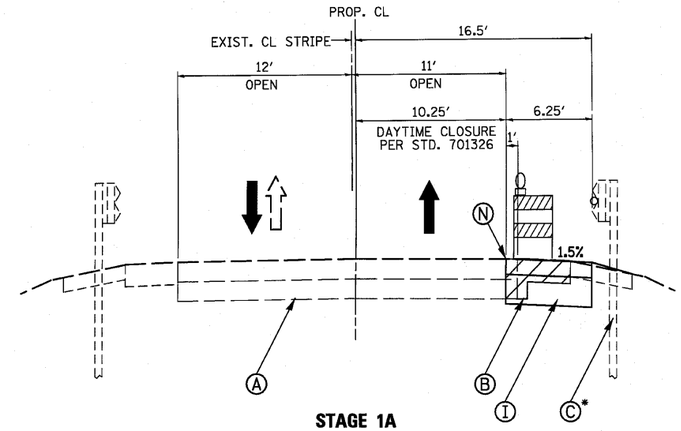

STAGE 1A
TEMPORARY PAVEMENT

TEMP PAVEMENT: STA. 939+99 TO STA. 942+44
STA. 944+94 TO STA. 946+78

*EXIST. GUARDRAIL:
STA. 940+40 TO STA, 946+50, RT.

STA. 940+60 TO STA. 946+60 LT.
(TO BE REMOVED IN STAGE 1)

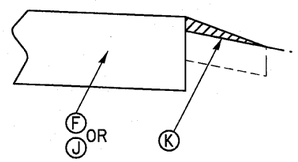

AGGREGATE WEDGE SHOULDER, TYPE B

TO BE CONSTRUCTED ADJACENT TO
ALL TEMPORARY PAVEMENT WIDENING
CONSTRUCTED WITH STAGE 1A AND 1B

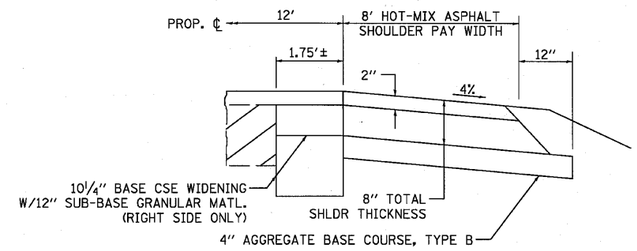

BASE COUSE WIDENING AND
SHOULDER DETAIL

STAGE 1A

- REMOVE EXISTING PAVEMENT STRUCTURE FROM STA. 936+40, RT. TO STA. 942+44, RT. AND STA. 944+94, RT. TO STA. 950+32, RT. THE WORK SHALL BE COMPLETED UTILIZING TRAFFIC CONTROL STD 701326.
- CONSTRUCT HMA BASE COURSE WIDENING AND SHOULDER FROM 936+40, RT. TO STA. 939+99, RT. AND STA. 946+78, RT. TO STA. 950+32, RT. WORK TO BE COMPLETED UTILIZING TRAFFIC CONTROL STANDARD 701326.
- CONSTRUCT TEMP PAVEMENT FROM 939+99, RT. TO STA. 942+44, RT. AND STA. 944+94, RT. TO STA. 946+78, RT. WORK TO BE COMPLETED UTILIZING TRAFFIC CONTROL STANDARD 701326.
- CONSTRUCT AGGREGATE WEDGE SHOULDER, TYPE B ADJACENT TO THE TEMPORARY PAVEMENT AND SHOULDER.
- PLACE BARRICADES ADJACENT TO THE EDGE OF THE EXISTING PAVEMENT STRUCTURE UNTIL STAGE 1 IS INSTALLED.

STAGE 1

- SET UP STAGE 1 LANE SHIFT AND TRAFFIC CONTROL PLAN (SEE STAGE 1 MOT PLAN)
- SET UP TEMPORARY CONCRETE BARRIER WALL AND ATTENUATORS.
- SET TEMPORARY BRIDGE SIGNALS.
- INSTALL EROSION CONTROL DEVICES AS REQUIRED PRIOR TO BEGINNING CONSTRUCTION ACTIVITIES
- REMOVE ROADWAY PAVEMENTS
- REMOVE EXISTING GUARDRAIL LEFT OF THE CENTERLINE.
- CONSTRUCT BRIDGE AND APPROACH SLAB LEFT OF CENTERLINE
- CONSTRUCT SUBGRADE, AGGREGATE BASE COURSES, AND PAVEMENTS (BINDER COURSE ONLY) LEFT OF CENTERLINE.
- CONSTRUCT THE STEEL PLATE BEAM GUARDRAIL AND END TREATMENTS. CONSTRCUT HEIGHT OF GUARDRAIL BASED ON THE 2" SURFACE COURSE TO BE PLACED IN STAGE 3.
- PLACE TOPSOIL, SEEDING AND BLANKET LEFT OF THE CENTERLINE IN ITS ENTIRETY.

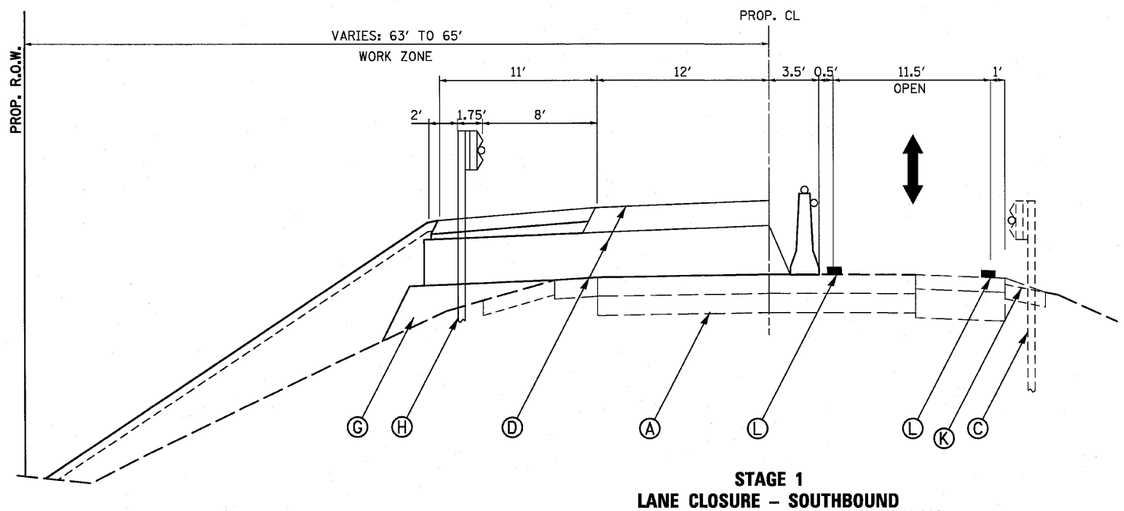

STAGE 1
LANE CLOSURE – SOUTHBOUND

STA. 937+75 TO STA. 942+44
STA. 944+95 TO STA. 949+18

LEGEND

- (A) EXIST. PAVEMENT STRUCTURE
- (B) EXIST. PAVEMENT AND SHOULDER STRUCTURE - TO BE REMOVED
- (C) EXIST. GUARDRAIL W/PROP. GUARDRAIL MARKERS
- (D) PROP. PAVEMENT STRUCTURE (AGGREGATE BASE/HMA BINDER)
- (E) PROP. SURFACE COURSE
- (F) PROP. HOT MIX ASPHALT SHOULDER/AGGREGATE BASE COURSE
- (G) PROP. AGGREGATE SUB-BASE
- (H) PROP. STEEL PLATE BEAM GUARDRAIL, TYPE A W/GUARDRAIL MKRS.
- (I) PROP. BASE COURSE WIDENING
- (J) TEMPORARY PAVEMENT
- (K) AGGREGATE WEDGE SHOULDER, TYPE B
- (L) TEMPORARY PAVEMENT MARKING LINE
- (M) SAWCUT - FULL DEPTH
- (N) SHORT-TERM PAVEMENT MARKINGS

WILLS BURKE KELSEY ASSOCIATES LTD.
115 West Main Street, Suite 201
St. Charles, Illinois 60174
(630) 443-7755

USER NAME = $USER$	DESIGNED -	REVISED -	
	DRAWN -	REVISED -	
PLOT SCALE =	CHECKED -	REVISED -	
PLOT DATE = 8/2/2010	DATE - 8/6/10	REVISED -	

STATE OF ILLINOIS
DEPARTMENT OF TRANSPORTATION

MAINTENANCE OF TRAFFIC
TYPICAL SECTIONS

SCALE: | SHEET NO. 11 OF 90 SHEETS | STA. | TO STA.

F.A. RTE.	SECTION	COUNTY	TOTAL SHEETS	SHEET NO.
646	8BR-1	WHITESIDE	90	11
		CONTRACT NO.84854		

FED. ROAD DIST. NO. 2 | ILLINOIS | FED. AID PROJECT

FILE NAME = P:\CORBEL WEST Projects\2009\124100.K09.IL48\Civil\Dgn\Sht\D284854-sht-mot-typicals1.dgn