F.A. RTE.	SECTION	COUNTY	TOTAL SHEETS	SHEET NO.
	06-00543-00-BT	WINNEBAGO	148	1
FED. ROAD DIST. NO.		ILLINOIS	CONTRACT NO.	85521

11-5-10 LETTING ITEM 01P

YEAR CONSTRUCTED 2010

- ☐ WATER MAIN
- X ☐ STORM SEWER
- ☐ SANITARY SEWER
- X ☐ SIDEWALK/PATH
- X ☐ CURB & GUTTER
- X ☐ BRIDGE/BOX CULVERT

STATE OF ILLINOIS
DEPARTMENT OF TRANSPORTATION
DIVISION OF HIGHWAYS

PLANS FOR PROPOSED
TEA21 ENHANCEMENT FUND PROJECT

ROCKFORD RIVERWALK MUSEUM CAMPUS
SECTION 06-00543-00-BT
PROJECT No. TE-D2(133)
CITY OF ROCKFORD
WINNEBAGO COUNTY
JOB NO. C-92-019-07

CONTRACT NO. 85521
ITEP NO. 202028

DISCOVERY CENTER	BURPEE MUSEUM
1,324 LF	698 LF

PHASE 1 TOTAL LENGTH = 2,022 LF (0.383 mi.)

DISTRICT 2

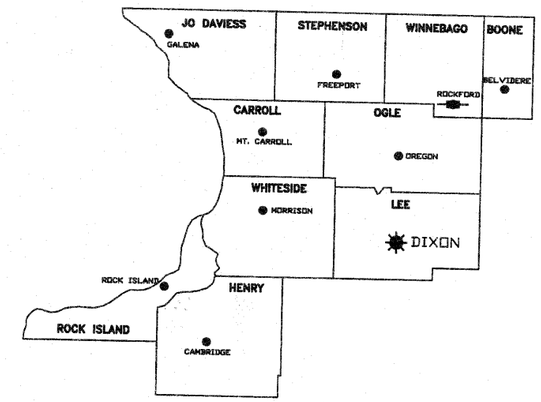

DISTRICT HEADQUARTERS
PROJECT LOCATION

INDEX of SHEETS

DESIGN DESIGNATION
PEDESTRIAN PATH

STATE STANDARDS

280001–05	TEMPORARY EROSION CONTROL SYSTEMS
424001–05	CURB RAMPS FOR SIDEWALKS
515001–03	NAME PLATE FOR BRIDGES
542301–02	PRECAST REINFORCED CONCRETE FLARED END SECTION
602301–02	INLET – TYPE A
602401–02	MANHOLE TYPE A
602601–02	PRECAST REINFORCED CONCRETE FLAT SLAB TOP
602701–02	MANHOLE STEPS
604001–03	FRAME AND LIDS TYPE 1
604036–02	GRATE TYPE 8
606001–04	CONCRETE CURB TYPE B AND COMBINATION CURB AND GUTTER
606201–02	TYPE B GUTTER INLET, OUTLET & ENTRANCE
606301–04	PC CONCRETE ISLANDS AND MEDIANS
630001–08	STEEL PLATE BEAM GUARDRAIL
631011–06	TRAFFIC BARRIER TERMINAL, TYPE 2
701101–02	OFF–RD OPERATIONS, MULTILANE, 15'
701106–02	OFF–RD OPERATIONS, MULTILANE MORE THAN 15'
701301–03	LANE CLOSURE, 2L, 2W, SHORT TIME OPERATIONS
701601–06	URBAN LANE CLOSURE, MULTILANE, 1W OF 2W WITH NONTRAVERSABLE MEDIAN
701701–06	URBAN LANE CLOSURE, MULTILANE INTERSECTION
701801–04	URBAN LANE CLOSURE, MULTILANE, 1W OR 2W CROSSWALK OR SIDEWALK CLOSURE
701901–01	TRAFFIC CONTROL DEVICES
814001–02	HANDHOLES
878001–08	CONCRET FOUNDATION DETAILS
836001	LIGHT POLE FOUNDATION
720011–01	METAL POSTS FOR SIGNS, MARKERS & DELINEATORS
728001–01	TELESCOPING STEEL SIGN SUPPORT
729001–01	APPLICATIONS OF TYPES A & B METAL POSTS (FOR SIGNS & MARKERS)

T 44 N

R 1 E

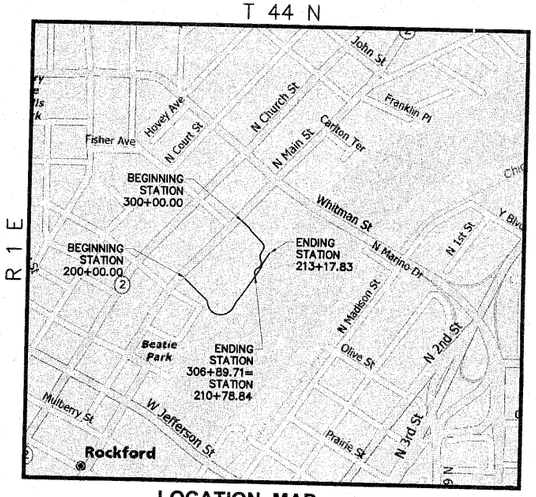

LOCATION MAP not to scale

SCALES:

PLAN & PROFILE: 1" = 20' HORIZONTAL, 1" = 5' VERTICAL (0 20 40)

CROSS SECTION: 1" = 5' HORIZONTAL, 1" = 5' VERTICAL (0 5 10)

UTILITIES:

GAS:
NICOR
300 WEST TERRA COTTA AVENUE
CRYSTAL LAKE, ILLINOIS 60014
(630) 435–0111

ELECTRIC:
ComEd
123 ENERGY AVENUE
ROCKFORD, ILLINOIS 61109
(815) 490–2869

TELEPHONE:
AT&T COMPANY
216 NORTH MAIN STREET
ROCKFORD, ILLINOIS 61101
(800) 222–0400

SEWER:
ROCK RIVER WATER RECLAMATION DISTRICT
3501 KISHWAUKEE STREET
ROCKFORD, ILLINOIS 61126
(815) 387–7660

WATER:
CITY OF ROCKFORD – PUBLIC WORKS
425 EAST STATE STREET
ROCKFORD, ILLINOIS 61104
(815) 987–5570

CABLE TELEVISION:
COMCAST
4450 KISHWAUKEE STREET
ROCKFORD, ILLINOIS 61109
(815) 395–8977

HIGHWAY:
CITY OF ROCKFORD – PUBLIC WORKS
425 EAST STATE STREET
ROCKFORD, ILLINOIS 61104
(815) 987–5570

Call Before You Dig
JULIE ILLINOIS ONE-CALL SYSTEM
811 or 1-800-892-0123
TOLL-FREE

GARY W. CAMLING 062-046782 REGISTERED PROFESSIONAL ENGINEER STATE OF ILLINOIS

Gary W. Camling
Dated 8/31/2010, 2010
Exp. 11/30/2011

PASSED September 13 2010
DISTRICT ENGINEER OF LOCAL ROADS & STREETS

RELEASED FOR BID BASED ON LIMITED REVIEW September 13 2010
DEPUTY DIRECTOR OF HIGHWAYS, REGION 2 ENGINEER

APPROVED AUGUST 1 2010
CITY OF ROCKFORD ENGINEER

SHEET REVIEW	
AGENCY	DATE

REVISIONS		
NO.	ITEM	DATE

SCALE:	N/A
DRAWN BY:	MS
CHECKED BY:	JWH
DATE:	AUGUST 13, 2010

McClure Engineering Associates, Inc.
7282 Argus Drive (815) 398-2332
Rockford, Illinois 61107-5837 FAX (815) 398-2496
Design Firm License: Illinois 184-000816

COVER SHEET
RIVERWALK MUSEUM CAMPUS
711 NORTH MAIN STREET ROCKFORD, IL
FILE:H:\08-008 RIVERWALK MUSEUM\DESIGN\DRAWINGS\08-008 COVER.DWG
JOB: 04-28-10-008

SHEET NO. 1 OF 148

IL MONTY

F.A. RTE.	SECTION	COUNTY	TOTAL SHEETS	SHEET NO.
	06-00543-00-BT	WINNEBAGO	148	2
FED. ROAD DIST. NO.		ILLINOIS	CONTRACT NO.	85521

GENERAL NOTES

GENERAL

1. IN THE FOLLOWING, THE ILLINOIS DEPARTMENT OF TRANSPORTATION WILL BE REFERRED TO AS IDOT.

2. THIS PROJECT SHALL BE CONSTRUCTED IN ACCORDANCE WITH THE "STANDARD SPECIFICATIONS FOR ROAD AND BRIDGE CONSTRUCTION" PREPARED BY IDOT, ADOPTED JANUARY 1, 2007, "SUPPLEMENTAL SPECIFICATIONS AND RECURRING SPECIAL PROVISIONS" PREPARED BY IDOT, ADOPTED JANUARY 1, 2010, AND THE STANDARDS OF THE CITY OF ROCKFORD, WHERE APPLICABLE. ALL SEWER AND WATER MAIN CONSTRUCTION SHALL BE IN ACCORDANCE WITH THE "STANDARD SPECIFICATIONS FOR WATER AND SEWER MAIN CONSTRUCTION IN ILLINOIS", FIFTH EDITION AND THE STANDARDS OF THE CITY OF ROCKFORD WATER DEPARTMENT AND THE ROCK RIVER WATER RECLAMATION DISTRICT. SIGN CONSTRUCTION AND PAVEMENT MARKINGS SHALL CONFORM TO THE REQUIREMENTS OF THE "MANUAL ON UNIFORM TRAFFIC CONTROL DEVICES", CURRENT EDITION.

3. GENERAL SAFETY PROVISION: TO PROVIDE DRIVERS WITH SAFE TRAVEL CONDITIONS DURING THE CONSTRUCTION PROJECT, AND TO PROVIDE SAFE WORKING CONDITIONS FOR ALL EMPLOYEES, THE RULES, REGULATIONS, AND CONDITIONS STATED BELOW WILL PREVAIL FOR THE DURATION OF THIS CONTRACT. ANY EMPLOYEE OF THE CONTRACTOR OR HIS SUBCONTRACTORS WHO REFUSES TO COMPLY WITH THESE GENERAL SAFETY PROVISIONS SHALL BE REMOVED FROM THE JOB SITE IN ACCORDANCE WITH THE IDOT STANDARD SPECIFICATIONS. THE CONTRACTOR AND ANY SUBCONTRACTORS RETAINED BY HIM SHALL COMPLY WITH THE STATE AND FEDERAL REQUIREMENTS OF THE OCCUPATIONAL SAFETY AND HEALTH ACT OF 1970 (OSHA), AS IT RELATES TO HIS OPERATIONS, REVISED AS OF JULY 1, 1987.

4. THE CONTRACTOR WILL BE REQUIRED TO COMPLY WITH ALL STATE REGULATIONS REGARDING AIR, WATER, AND NOISE POLLUTION. HE WILL NOT BE ALLOWED TO BUILD FIRES ON THE SITE.

5. WHEN ARTIFICIAL LIGHTING IS UTILIZED DURING NIGHT OPERATIONS, THE CONTRACTOR SHALL EXERCISE UTMOST PRECAUTIONS IN PREVENTING ADVERSE VISIBILITY TO THE MOTORING PUBLIC, AS WELL AS ADJOINING RESIDENTIAL AREAS.

6. THE SCALE SHOWN ON THE DRAWINGS APPLIES ONLY TO THE FULL SIZE PLANS AND NOT REDUCED SIZE PLANS. DO NOT SCALE REDUCED PLANS FOR CONSTRUCTION DIMENSIONS.

7. THE ELEVATIONS SHOWN ON THE PLANS ARE FINISHED GRADES OF PROPOSED PAVEMENT, SURFACE COURSE OR DITCHES, UNLESS OTHERWISE INDICATED.

8. IT SHALL BE THE CONTRACTOR'S RESPONSIBILITY TO MAINTAIN DRAINAGE FLOWS AT ALL TIMES DURING THE PERFORMANCE OF THE WORK. METHODS USED BY THE CONTRACTOR SHALL BE SUBJECT TO THE APPROVAL OF THE ENGINEER. COST OF MAINTAINING DRAINAGE FLOWS SHALL BE INCLUDED IN THE VARIOUS UNIT PRICES FOR THE ITEMS BEING CONSTRUCTED. NO ADDITIONAL COMPENSATION WILL BE ALLOWED. THE CONTRACTOR SHALL BE RESPONSIBLE FOR MAINTAINING POSITIVE DRAINAGE AT THE CONCLUSION OF EACH WORKING DAY.

9. ANY FRAMES AND GRATES, SIGNS, FENCES, AND RETAINING WALLS DAMAGED BY THE CONTRACTOR DURING CONSTRUCTION, WHICH ARE NOT DESIGNATED TO BE REMOVED OR REPLACED, WILL BE REPLACED BY THE CONTRACTOR AT HIS EXPENSE.

10. THE CONTRACTOR IS RESPONSIBLE FOR COORDINATING HIS CONSTRUCTION OPERATIONS WITH OTHER CONSTRUCTION AND/OR MAINTENANCE OPERATIONS, INCLUDING UTILITY RELOCATIONS AND ADJUSTMENTS OF OTHER CONTRACTORS WORKING WITHIN THE LIMITS OF THE PROJECT AND ADJACENT TO THE PROJECT.

11. THE CONTRACTOR SHALL PROTECT AND CAREFULLY PRESERVE ALL PROPERTY MARKERS, MONUMENTS AND RIGHT-OF-WAY PINS UNTIL THE OWNER, AN AUTHORIZED SURVEYOR, OR AGENT HAS WITNESSED OR OTHERWISE REFERENCED THEIR LOCATION. THE CONTRACTOR SHALL BE RESPONSIBLE FOR HAVING AN AUTHORIZED SURVEYOR RE-ESTABLISH ANY SECTION OR SUBSECTION MONUMENTS DISTURBED OR DESTROYED BY HIS OPERATIONS. REPLACEMENT OF MONUMENTS WILL BE DETERMINED BY THE ENGINEER. PROPERTY MARKERS DAMAGED BY THE CONTRACTOR SHALL BE REPLACED AT THE EXPENSE OF THE CONTRACTOR AT NO ADDITIONAL EXPENSE TO THE OWNER.

12. IT IS THE CONTRACTOR'S RESPONSIBILITY TO ASCERTAIN THE EXISTING FIELD CONDITIONS BEFORE BIDDING ON THE PROJECT, ORDERING MATERIALS, OR BEGINNING CONSTRUCTION PARTICULARLY AS THEY RELATE TO LUMP SUM ITEMS. THE CONTRACTOR SHALL FIELD VERIFY THE ELEVATIONS OF THE BENCHMARKS PRIOR TO COMMENCING WORK. THE CONTRACTOR SHALL ALSO FIELD VERIFY LOCATION, ELEVATION AND SIZE OF EXISTING UTILITIES, AND VERIFY PAVEMENT ELEVATIONS WHERE MATCHING INTO EXISTING WORK. THE CONTRACTOR SHALL FIELD VERIFY HORIZONTAL CONTROL BY REFERENCING KNOWN PROPERTY LINES, OR SURVEY MARKERS. THE CONTRACTOR SHALL NOTIFY THE ENGINEER OF DISCREPANCIES IN EITHER VERTICAL OR HORIZONTAL CONTROL PRIOR TO PROCEEDING WITH WORK.

13. THE CONTRACTOR SHALL REMOVE, STORE, AND RELOCATE TO THE SATISFACTION OF THE ENGINEER ALL EXISTING STREET NAME SIGNS WHICH ARE TO BE RELOCATED IN ACCORDANCE WITH ARTICLE 107.25 OF THE IDOT STANDARD SPECIFICATIONS. THE PLACEMENT OF ADDITIONAL SIGNING SHALL BE THE RESPONSIBILITY OF THE CITY OF ROCKFORD, OR THEIR APPROVED REPRESENTATIVES.

14. ANY PRIVATE OR COMMERCIAL SIGNS WHICH NEED TO BE REMOVED FOR CONSTRUCTION PURPOSES SHALL BE HANDLED AS FOLLOWS:

    A. WITHIN THE EXISTING RIGHT-OF-WAY; SIGNS SHALL BE REMOVED OR REMOVED AND REPLACED AS DIRECTED BY THE PLANS. PAYMENT FOR ALL MATERIALS AND LABOR REQUIRED FOR THIS WORK SHALL BE CONSIDERED AS INCLUDED IN THE UNIT BID PRICES OF THE CONTRACT AND NO ADDITIONAL COMPENSATION WILL BE ALLOWED.

    B. OUTSIDE THE EXISTING RIGHT-OF-WAY; THE CONTRACTOR SHALL USE CARE IN GRADING OR EXCAVATION NEAR ANY AND ALL EXISTING SIGNS OUTSIDE THE RIGHT-OF-WAY. ANY SIGNS REMOVED FOR CONSTRUCTION PURPOSES SHALL BE CAREFULLY REMOVED AND RE-ERECTED BY THE CONTRACTOR AT A LOCATION NEAREST TO THE ORIGINAL LOCATION, OR AT A LOCATION DETERMINED BY THE ENGINEER IN THE FIELD. ANY DAMAGE DONE TO EXISTING SIGNS BY THE CONTRACTOR'S OPERATIONS SHALL BE REPAIRED OR REPLACED AT NO ADDITIONAL EXPENSE TO THE OWNER.

15. ALL ITEMS SHALL INCLUDE <u>ALL</u> THE NECESSARY MATERIALS AND LABOR TO COMPLETE THE ITEM IN PLACE; MATERIALS AND LABOR NOT SPECIFICALLY IDENTIFIED SHALL BE CONSIDERED INCLUDED IN THE UNIT PRICE OF THE ITEM BEING CONSTRUCTED.

16. ALL MATERIALS SHALL MEET OR EXCEED CITY OF ROCKFORD AND SECTION 106 OF THE IDOT STANDARD SPECIFICATIONS.

17. THE CITY OF ROCKFORD AND McCLURE ENGINEERING SHALL BE NOTIFIED 48 HOURS PRIOR TO THE START OF CONSTRUCTION. THE CITY OF ROCKFORD WATER DEPARTMENT AND THE ROCK RIVER WATER RECLAMATION DISTRICT SHALL BE NOTIFIED 48 HOURS PRIOR TO PERFORMING WORK ON THE WATER AND/OR SANITARY SEWER SYSTEMS.

18. ALL RADII AND DIMENSIONS ARE REFERENCED TO THE BACK OF CURB UNLESS OTHERWISE NOTED.

19. THE CONTRACTOR SHALL SUBMIT A PROGRESS SCHEDULE TOGETHER WITH A LIST OF SUPPLIERS AND SUBCONTRACTORS AT THE PRE-CONSTRUCTION MEETING.

20. THE CONTRACTOR SHALL KEEP EXISTING ROADWAYS AND PAVEMENTS FREE OF MUD AND OTHER DEBRIS AND SHALL INSTITUTE DUST CONTROL MEASURES DURING CONSTRUCTION.

21. SOIL BORING LOGS ARE INCLUDED IN THE CONTRACT DOCUMENTS. A STRUCTURE GEOTECHNICAL REPORT IS AVAILABLE FOR INSPECTION AT THE CONTRACTOR'S REQUEST.

22. THE CONTRACTOR SHALL CONFINE WORK ACTIVITIES TO THE CONSTRUCTION LIMITS AS DEFINED ON THE TYPICAL SECTIONS AND CROSS-SECTIONS. AREAS DISTURBED OUTSIDE THE CONSTRUCTION LIMITS WILL BE RESTORED AT THE CONTRACTOR'S EXPENSE.

23. ALL WORK PERFORMED BY THE CONTRACTOR SHALL BE GUARANTEED BY THE CONTRACTOR FOR A PERIOD OF TWELVE MONTHS FROM THE DATE OF ACCEPTANCE BY THE OWNER. THE GUARANTEE SHALL COVER PROBLEMS RESULTING FROM DEFECTS IN MATERIALS AND WORKMANSHIP.

24. THE CONTRACTOR SHALL KEEP A SET OF APPROVED PROJECT PLANS AND SPECIFICATIONS ON THE SITE AT ALL TIMES.

TRAFFIC CONTROL

1. THE CONTRACTOR SHALL INSTITUTE TRAFFIC CONTROL MEASURES AT ALL TIMES, IN ACCORDANCE WITH THE STANDARD SPECIFICATIONS AND TRAFFIC CONTROL STANDARDS.

2. ROCKFORD MUSEUM PARK AND BURPEE PARKING SHALL BE OPEN TO LOCAL TRAFFIC AT ALL TIMES. ACCESS MUST BE MAINTAINED TO ALL EXISTING PROPERTIES DURING CONSTRUCTION PER ARTICLE 107.09 UNLESS ARRANGEMENTS ARE MADE IN WRITING BY THE CONTRACTOR WITH THE PROPERTY OWNER FOR SHORT-TERM CLOSURES. A COPY OF SAID ARRANGEMENT MUST BE GIVEN TO THE ENGINEER PRIOR TO ANY CLOSURES.

3. THE CONTRACTOR IS ADVISED THAT IN THE EVENT OF SNOW, HE WILL BE HELD RESPONSIBLE FOR THE IMMEDIATE REMOVAL OF ANY TRAFFIC CONTROL AND PROTECTION/MAINTENANCE OF TRAFFIC DEVICES REQUIRED FOR HIS OPERATIONS THAT WOULD INTERFERE WITH SNOW REMOVAL OPERATIONS.

4. THE CONTRACTOR SHALL AT ALL TIMES PROVIDE PROTECTION FOR THE TRAFFIC AS DIRECTED BY THE ENGINEER AND AS CALLED FOR IN THE SPECIAL PROVISIONS. ANY DROP-OFF GREATER THAN 3 INCHES ADJACENT TO THE EDGE OF PAVEMENT SHALL BE PROTECTED WITH BARRICADES AND SHALL BE INCLUDED IN THE UNIT PRICE FOR TRAFFIC CONTROL AND PROTECTION.

5. ALL TRAFFIC CONTROL DEVICES USED FOR THE MAINTENANCE OF TRAFFIC SHALL BE REFLECTORIZED PRIOR TO INSTALLATION AND CLEANED AS NECESSARY THROUGHOUT THE DURATION OF THE CONTRACT. ALL SIGNS SHALL BE FURNISHED, INSTALLED AND MAINTAINED BY THE CONTRACTOR. PAYMENT SHALL BE INCLUDED IN THE CONTRACT UNIT PRICE FOR TRAFFIC CONTROL AND PROTECTION.

6. TRAFFIC CONDITIONS, ACCIDENTS AND OTHER UNFORESEEN CONDITIONS MAY REQUIRE THE ENGINEER TO MODIFY THE LOCATION OF THE TRAFFIC CONTROL DEVICES. THE CONTRACTOR SHALL MAKE THE NECESSARY ADJUSTMENTS AS DIRECTED BY THE ENGINEER WITHOUT DELAY. THE CONTRACTOR SHALL RESPOND WITHIN 30 MINUTES FROM THE TIME OF NOTIFICATION BY THE ENGINEER TO ANY REQUEST MADE BY THE ENGINEER FOR CORRECTION, IMPROVEMENT OR MODIFICATION OF THE MAINTENANCE OF TRAFFIC CONTROL DEVICES.

7. THE CONTRACTOR SHALL SUPPLY THE CITY OF ROCKFORD AND THE ENGINEER WITH A PRIMARY AND ALTERNATE CONTACT PERSON WITH 24-HOUR, 7-DAY ACCESS WHO CAN REMEDY DEFICIENT OR EMERGENCY TRAFFIC CONTROL MEASURES. THE CONTRACTOR SHALL INSPECT THE TRAFFIC CONTROL DEVICES NOT LESS THAN TWICE DAILY TO ENSURE THAT ALL BARRELS, BARRICADES, AND WARNING DEVICES ARE IN THEIR PROPER PLACE AND OPERATIONAL.

8. THE ENGINEER SHALL BE INFORMED 48 HOURS IN ADVANCE OF ANY CHANGE IN CONSTRUCTION STAGING OR TRAFFIC CONTROL.

9. SINCE THIS IS A MUSEUM CAMPUS, THE CONTRACTOR SHALL EXPECT TO BE PERFORMING HIS WORK UNDER A VARIETY OF VEHICULAR AND PEDESTRIAN TRAFFIC. THE CONTRACTOR SHALL PROVIDE REASONABLE PEDESTRIAN ACCESS NEAR THE CONSTRUCTION SITE AT ALL TIMES FOR PERSONS ENTERING AND LEAVING THE CAMPUS, AND SHALL UTILIZE THE CONSTRUCTION ENTRANCE FOR CONSTRUCTION TRAFFIC. WHERE CONDITIONS DO NOT ALLOW SAFE PEDESTRIAN ACCESS, THE CONTRACTOR SHALL BE ALLOWED TO CLOSE CERTAIN SIDEWALKS OR BOARDWALKS IN CONSULTATION WITH THE OWNER ONCE A SATISFACTORY DETOUR ROUTE IS ESTABLISHED.

10. THE CONTRACTOR SHALL COORDINATE HIS WORK WITH THE MUSEUM DIRECTOR'S OR THEIR DESIGNATED REPRESENTATIVE AND SHALL ACCOMMODATE SCHEDULED MUSEUM EVENTS TO THE FULLEST EXTENT POSSIBLE. REGULAR PROGRESS MEETINGS WITH THE MUSEUM DIRECTORS WILL BE REQUIRED.

11. WORK AREAS SHALL BE PROTECTED WITH ORANGE CONSTRUCTION FENCE OR CHAIN LINK FENCE IF CONSTRUCTION OPERATIONS WILL PRECLUDE SAFE PEDESTRIAN ACCESS FOR PERIODS LONGER THAN 24 HOURS.

12. WHEN NEEDED BY CONTRACTOR FLAGGERS SHALL COMPLY WITH ALL REQUIREMENTS CONTAINED IN IDOT'S "FLAGGER HANDBOOK" WITH THE FOLLOWING EXCEPTION: THE ANSII CLASS 2 OR 3 VESTS WILL NOT BE SUPPLIED. WHEN THE ROAD IS CLOSED TO THROUGH TRAFFIC AND IT IS NECESSARY TO PROVIDE ACCESS FOR LOCAL TRAFFIC, ALL FLAGGERS AS SHOWN ON THE APPLICABLE STANDARDS WILL BE REQUIRED.

13. ALL SITE ACCESS MUST BE CONFINED TO THE CONSTRUCTION EXIT(S)/ENTRANCE(S). THE CONTRACTOR SHALL ESTABLISH A CONSTRUCTION SITE PERIMETER USING CONSTRUCTION FENCE OR CHAIN LINK FENCE TO SEPARATE THE CONSTRUCTION ZONE FROM MUSEUM TRAFFIC. PARKING, DELIVERIES, AND GENERAL ACCESS SHALL BE LIMITED TO THE CONSTRUCTION ENTRANCE.

REMOVAL

1. THE CONTRACTOR WILL PROTECT ALL TREES FROM DAMAGE DUE TO HIS OPERATIONS. ONLY THOSE TREES INDICATED ON THE PLANS OR DESIGNATED BY THE ENGINEER SHALL BE REMOVED OR TRIMMED. TREES DESIGNATED AS "REMOVE" SHALL BE SUBJECT TO FINAL REVIEW BY THE ENGINEER PRIOR TO REMOVAL.

2. BRUSH AND WOODY PLANTS SMALLER THAN 6" DIAMETER, GROUND LITTER AND NON-HAZARDOUS TRASH, BRICKS, AND NORMAL CONSTRUCTION DEBRIS SHALL BE REMOVED IN ACCORDANCE WITH SECTION 201.10 (a) "CLEARING" AND SHALL NOT BE MEASURED FOR PAYMENT UNLESS SPECIFICALLY INCLUDED AS A PAYMENT ITEM.

3. ALL ROADWAY REMOVAL ITEMS SHALL CONFORM TO SECTION 440 OF THE IDOT STANDARD SPECIFICATIONS. ALL JOINTS BETWEEN THE PORTION REMOVED AND THAT LEFT IN PLACE SHALL BE SAW CUT TO SUCH A DEPTH THAT A CLEAN, NEAT EDGE WILL RESULT WITH NO SPALLING TO THE REMAINING PORTION. ADDITIONAL SAW CUTTING MAY BE REQUIRED AS DIRECTED BY THE ENGINEER AT NO ADDITIONAL COST TO THE OWNER.

4. THE REMOVAL OF BITUMINOUS SURFACING WHICH IS NOT ON A RIGID TYPE BASE SHALL BE PAID FOR AS EARTH EXCAVATION. THE REMOVAL OF BITUMINOUS SURFACING ON A RIDGED TYPE BASE SHALL BE PAID FOR AS BITUMINOUS SURFACE REMOVAL.

5. ANY EXCAVATED BITUMINOUS PAVEMENT, CONCRETE, OR OTHER NON-SOIL MATERIAL SHALL BE HAULED OFF AND DISPOSED OF BY THE CONTRACTOR OFFSITE AT AN APPROVED DUMPING SITE OF HIS CHOOSING.

6. IF ANY ASH TREES REQUIRE REMOVAL, THE CONTRACTOR SHALL DOUBLE CHIP. NO CHIPPED MATERIAL SHALL BE LARGER THAN 1" DIAMETER ON ANY SURFACE. IF LOGS ARE TO REMAIN ON SITE, THEY SHALL BE STRIPPED. NO TREE OR STUMP MATERIALS WILL BE REMOVED BY CONTRACTORS TO LOCATIONS OUT OF THE COUNTY OR THE STATE.

7. SAW CUTTING, EXCEPT WHERE INDICATED ON THE PLANS FOR PAYMENT, WILL NOT BE PAID FOR SEPARATELY BUT SHALL BE CONSIDERED INCIDENTAL TO THE ITEM BEING REMOVED.

UTILITIES

1. ABANDONED UNDERGROUND UTILITIES THAT CONFLICT WITH CONSTRUCTION OR HAVE THE POTENTIAL FOR CREATING FUTURE PROBLEMS SHALL BE REMOVED AND DISPOSED OF OUTSIDE THE LIMITS OF THE RIGHT OF WAY OR EASEMENTS AT AN APPROVED LOCATION OBTAINED BY THE CONTRACTOR, ACCORDING TO ARTICLE 202.03 OF THE IDOT STANDARD SPECIFICATIONS AND AS DIRECTED BY THE ENGINEER. THIS WORK WILL NOT BE PAID FOR SEPARATELY BUT SHALL BE CONSIDERED INCLUDED IN THE CONTRACT BID PRICE FOR EARTH EXCAVATION. NO ADDITIONAL COMPENSATION WILL BE ALLOWED.

2. UTILITIES SHOWN ON THE PLANS ARE FOR ILLUSTRATIVE PURPOSES ONLY AND NO GUARANTEE OF THEIR ACCURACY IS MADE OR INFERRED. THE LOCATIONS OF EXISTING UTILITIES AS SHOWN ON THE DRAWINGS REPRESENT DATA RECEIVED FROM VARIOUS SOURCES. IT IS NOT GUARANTEED TO BE CORRECT OR ALL-INCLUSIVE. THE CONTRACTOR SHALL CONDUCT HIS OWN INVESTIGATION INTO THE LOCATION, SIZE, DEPTH, NUMBER AND NATURE OF ANY AND ALL EXISTING UTILITIES WHICH MAY INTERFERE WITH THE WORK UNDER THIS CONTRACT. ANY EXISTING UTILITIES WHICH ARE TO REMAIN IN SERVICE SHALL BE FULLY PROTECTED BY THE CONTRACTOR AND ANY DAMAGE CAUSED BY THE CONSTRUCTION OPERATIONS SHALL BE IMMEDIATELY REPAIRED OR REPLACED TO THE SATISFACTION OF THE ENGINEER OR THE OWNER. THIS WORK SHALL BE AT THE CONTRACTORS EXPENSE.

3. THE CONTRACTOR SHALL CALL J.U.L.I.E. AT 811 OR 1-800-892-0123 48 HOURS PRIOR TO STARTING CONSTRUCTION FOR CONFIRMATION OF CURRENT UTILITY LOCATIONS AND FOR ALL NON-EMERGENCY WORK WITHIN THE PROJECT LIMITS OR IMMEDIATELY ADJACENT TO THE PROJECT CONSTRUCTION LIMITS. UTILITIES WHICH ARE NOT MEMBERS OF J.U.L.I.E. SHOULD BE NOTIFIED INDIVIDUALLY BY THE CONTRACTOR.

4. ALL TESTING, FITTINGS, BEDDING AND GRANULAR CRADLE WHERE NECESSARY, SHALL BE INCLUDED IN THE INSTALLATION OF UNDERGROUND FACILITIES. TRENCH BACKFILL IS REQUIRED WHEREVER UNDERGROUND PIPING AND UTILITIES PASS BENEATH OR WITHIN 2 FEET OF THE PAVEMENT, SIDEWALK, OR CURB.

5. ALL EXISTING CONDUITS WHICH WILL BE ABANDONED AND LEFT IN PLACE SHALL BE PLUGGED AT ALL OPEN ENDS WITH CONCRETE OR OTHER APPROVED MEANS. THE COST WILL BE CONSIDERED INCLUDED IN THE CONTRACT UNIT BID PRICE FOR THE ITEM BEING REMOVED OR ABANDONED.

6. ALL TRENCHING SHALL BE IN ACCORDANCE WITH OSHA STANDARDS. IT WILL BE THE CONTRACTOR'S RESPONSIBILITY TO EXCAVATE FAR ENOUGH IN ADVANCE OF THE PIPE LAYING OPERATION TO AVOID ANY UNNECESSARY DEFLECTION. IF THE CONTRACTOR HAS TO RELAY ANY PIPE BECAUSE HE LAID TOO CLOSE TO AN OBSTRUCTION, IT WILL BE AT HIS OWN EXPENSE.

7. IF DURING MANHOLE ADJUSTMENTS, THE CONTRACTOR DAMAGES EITHER THE FRAME OR LID, HE SHALL FURNISH A NEW FRAME AND LID, SAME OR EQUAL, AT NO ADDITIONAL COST. ALL NEW MANHOLES AND INLETS AND THOSE TO BE RECONSTRUCTED SHALL BE CONSTRUCTED WITH NEW FRAMES AND GRATES.

8. ALL UTILITY ADJUSTMENTS, EXCEPT WATER AND SEWER, SHALL BE MADE BY THEIR RESPECTIVE OWNERS. PER SB 699 (90 DAY UTILITY RELOCATION LAW), ONCE RIGHT-OF-WAY IS CLEAR TO AWARD THE PROJECT, A NOTICE WILL BE SENT TO THE UTILITY COMPANIES INSTRUCTING THEM TO HAVE THEIR FACILITIES RELOCATED WITHIN 90 DAYS. ESTIMATED DATE RELOCATION COMPLETE = LETTING DATE + 135 DAYS. TREE REMOVAL MAY BE NECESSARY PRIOR TO UTILITY COMPANIES BEING ABLE TO RELOCATE THEIR FACILITIES OUTSIDE THE CONSTRUCTION LIMITS. THE CONTRACTOR SHOULD COORDINATE ANY CONTRACT TREE REMOVAL ACTIVITIES WITH THE UTILITY COMPANIES TO ELIMINATE CONFLICTS AND POTENTIAL DELAYS CAUSED BY UTILITY TREE REMOVAL ACTIVITIES OR INCOMPLETE UTILITY RELOCATIONS.

9. RIM AND FLOW LINE ELEVATIONS ON DRAINAGE STRUCTURES (STORM AND SANITARY) ARE GIVEN ONLY TO ASSIST IN DETERMINING THE APPROXIMATE OVERALL HEIGHT OF THE STRUCTURE. THE CONTRACTOR SHALL FIELD VERIFY FLOW LINES OF EXISTING SEWER LINES PRIOR TO ORDERING INLETS AND MANHOLES. FRAMES ON ALL STRUCTURES SHALL BE ADJUSTED TO THE FINAL ELEVATION OF THE AREA IN WHICH THEY ARE LOCATED AS A PART OF THE STRUCTURE COST.

10. TRENCH BACKFILL MATERIAL WAS CALCULATED USING THE IDOT TRENCH BACKFILL DETAIL.

11. AT ALL LOCATIONS WHERE AN EXISTING INLET IS TO BE REMOVED, THE CONTRACTOR IS REQUIRED TO MAINTAIN STORM WATER FLOW AT ALL TIMES.

12. THE COST OF MAKING SEWER CONNECTIONS TO EXISTING OR PROPOSED STORM SEWER DRAINAGE STRUCTURES SHALL BE INCLUDED IN THE VARIOUS CONTRACT UNIT PRICES FOR STORM SEWER. WHERE A CONCRETE COLLAR IS REQUIRED TO CONNECT OR EXTEND STORM SEWER FROM DIFFERENT MANUFACTURERS, THE CONCRETE COLLAR SHALL NOT BE PAID FOR SEPARATELY BUT SHALL BE INCLUDED IN THE CONTRACT UNIT PRICE FOR STORM SEWER.

13. FRAMES AND GRATES OF DRAINAGE STRUCTURES TO BE REMOVED OR FILLED SHALL BE CAREFULLY SALVAGED AND SHALL REMAIN THE PROPERTY OF THE CITY OF ROCKFORD AND SHALL BE DELIVERED TO THE CITY YARD. THE COST FOR THIS SHALL BE INCLUDED IN THE VARIOUS BID ITEMS INVOLVED.

14. STORM SEWER INSTALLED WITHIN 10 FEET OF A WATER MAIN AND DESIGNATED WATER MAIN QUALITY (W.M.Q.) WILL REQUIRE FLEXIBLE "O" RING GASKETS AS SPECIFIED IN ARTICLE 550.06 OF THE STANDARD SPECIFICATIONS, UNLESS OTHER (W.M.Q.) PIPE IS USED.

15. MANHOLES TO BE ADJUSTED THAT FALL WITHIN THE PROPOSED ROADWAY OR SHOULDERS SHALL HAVE A NEW, HEAVY-DUTY CASTING PROVIDED.

16. STATIONS AND OFFSETS FOR DRAINAGE STRUCTURES LOCATED WITHIN THE ROADWAY OR EASEMENTS ARE TO THE BACK OF CURB. ALL STATIONS AND OFFSETS FOR DRAINAGE STRUCTURES NOT LOCATED WITHIN THE ROADWAY OR EASEMENTS ARE TO THE CENTER OF THE STRUCTURE. STATIONS AND OFFSETS FOR FIRE HYDRANTS ARE TO THE CENTER OF THE HYDRANT.

17. IF EXISTING SANITARY MANHOLES TO BE ADJUSTED DO NOT HAVE STANDARD NEENAH R-1670 OR E. JORDAN E-1117 CASTINGS, OR IF THE CASTINGS ARE IN POOR CONDITION, THE ROCK RIVER WATER RECLAMATION DISTRICT'S SUPPORTING SERVICES DEPARTMENT SHOULD BE CONTACTED PRIOR TO ADJUSTMENT FOR REPLACEMENT CASTINGS. THE CONTRACTOR IS RESPONSIBLE FOR EXCHANGING THE OLD CASTING FOR NEW ONES AT THE DISTRICT, IF REQUIRED. THE DISTRICT WILL FURNISH THE CASTINGS AND LIDS. THE CONTRACTOR SHALL BE RESPONSIBLE FOR INSTALLING THEM. EXTERNAL MANHOLE "CHIMNEY" SEALS WILL BE REQUIRED - MANHOLE SEAL INSTALLATION WILL BE CONTRACTOR'S RESPONSIBILITY.

18. NEW MANHOLE, VALVE VAULT, AND INLET LIDS ON THIS PROJECT SHALL HAVE THE WORDS "STORM", "SANITARY", OR "WATER" ON THE LID. IT WILL BE THE CONTRACTOR'S RESPONSIBILITY TO DETERMINE THE APPROPRIATE TYPE OF LID. NO ADDITIONAL COMPENSATION WILL BE ALLOWED FOR THIS WORK.

19. SANITARY MANHOLES SHALL BE ADJUSTED PER ROCK RIVER WATER RECLAMATION DISTRICT STANDARDS. THE CONTRACTOR SHALL ALSO NOTIFY THE ROCK RIVER WATER RECLAMATION DISTRICT WHEN ADJUSTING MANHOLES SO THEY MAY WITNESS THEM, AND SHALL FOLLOW DISTRICT SPECIFICATIONS WHICH REQUIRE:

    A. A MINIMUM OF 4 INCHES OF ADJUSTMENT RINGS (4" ADJUSTMENT RING NOT REQUIRED IN TURF AREA OR CURB AND GUTTER ROADWAYS)
    B. A MAXIMUM OF 12" ADJUSTING RINGS.
    C. NO MORE THAN ONE (1) 2" ADJUSTING RING PER MANHOLE.
    D. A MAXIMUM OF 30" FROM THE TOP OF CASTING TO THE FIRST STEP.
    E. MANHOLE ADJUSTMENT BY GROUTING IS NOT PERMITTED.
    F. MANHOLE CASTINGS IN ROADWAYS SHOULD BE SHIMMED INTO ALIGNMENT WITH THE PAVEMENT SURFACE. FOR PITCHED CASTINGS, A MINIMUM OF THREE SHIMS (PLASTIC OR METAL) EQUALLY SPACED TO PREVENT ROCKING SHALL BE INSTALLED BETWEEN THE CASTING AND THE MASONRY. THE REMAINING SPACE BETWEEN THE CASTING AND MASONRY SHALL BE FILLED WITH HYDRAULIC CEMENT.

20. WHEREVER UTILITIES INCLUDING ELECTRIC, IRRIGATION, COMMUNICATION, OR FIBER-OPTIC, CROSS A PAVED SURFACE OR STRUCTURE, A PVC SLEEVE SHALL BE INSTALLED UNDER THE SIDEWALK. STRUCTURE OR PAVING. THE SLEEVE SHALL BE A MINIMUM OF 2" DIAMETER AND SHALL BE TAPED ON THE ENDS UNTIL USE. THE SLEEVE SHALL EXTEND A MINIMUM OF 2 FEET BEYOND THE EDGE OF SIDEWALK OR PAVING. THE COST OF THE SLEEVE SHALL BE INCLUDED IN THE COST OF THE UTILITY BEING SERVED.

EXCAVATION / EARTHWORK

1. THE CONTRACTOR SHALL USE CARE IN GRADING OR EXCAVATING NEAR ANY AND ALL EXISTING ITEMS WHICH ARE NOT INDICATED TO BE REMOVED. ANY DAMAGE DONE TO EXISTING ITEMS BY THE CONTRACTOR'S OPERATIONS SHALL BE REPAIRED AT NO ADDITIONAL COST TO THE OWNER.

2. TOPSOIL IS TO BE PLACED AND COMPACTED IN ACCORDANCE WITH SECTION 211 OF THE STANDARD SPECIFICATIONS.

3. SEE CROSS SECTIONS FOR SPECIAL SLOPES AND SPECIAL DITCHES.

4. CLEARING SHALL BE DONE IN ACCORDANCE WITH SECTION 201 OF THE STANDARD SPECIFICATIONS AND SHALL NOT BE MEASURED FOR PAYMENT.

5. EARTH REMOVED IN SHAPING THE SUBGRADE OF THE PAVEMENT AND DITCHES AND NOT USED AS FILL SHALL BE DISPOSED OF BY THE CONTRACTOR AS DIRECTED BY THE ENGINEER, WITH NO ADDITIONAL COMPENSATION. THE COST OF PERFORMING SUCH WORK IS INCLUDED IN THE CONTRACT UNIT PRICE FOR EARTH EXCAVATION.

6. EXISTING TOPSOIL WHICH IS TO BE USED IN EMBANKMENT SHALL BE PLACED AND COMPACTED IN ACCORDANCE WITH SECTION 205 OF THE STANDARD SPECIFICATIONS.

7. WHENEVER THE CONTRACTOR WORKS NEAR EXISTING FACILITIES WITHIN THE LIMITS OF THE IMPROVEMENTS DURING TRENCHING OPERATIONS, HE WILL BE REQUIRED TO HAND TRENCH IN THAT AREA IN ORDER NOT TO DAMAGE THESE FACILITIES. PUSH HOLES AND SEARCH HOLES THAT ARE DUG BY THE CONTRACTOR SHALL BE BACKFILLED BY TAMPING THE REMOVED MATERIAL BACK IN PLACE TO KEEP SETTLEMENT TO A MINIMUM. NO ADDITIONAL COMPENSATION WILL BE ALLOWED.

ROADWAY ITEMS

1. DURING HOT-MIX ASPHALT SURFACE COURSE PAVING, NO LONGITUDINAL JOINTS WILL BE ALLOWED WITHIN THE THROUGH LANE.

2. PROTECTIVE COAT SHALL BE APPLIED TO ALL CONCRETE SURFACES PER ARTICLE 420.18 OF THE IDOT "STANDARD SPECIFICATIONS FOR ROAD AND BRIDGE CONSTRUCTION". THE COST OF THE PROTECTIVE COAT SHALL BE CONSIDERED INCLUDED IN THE CONTRACT UNIT PRICE TO WHICH IT IS APPLIED.

3. DETECTABLE WARNINGS SHALL BE PLACED AT ALL CURB RAMPS PER CITY STANDARDS.

4. PREFORMED FIBER EXPANSION JOINTS WHERE REQUIRED SHALL BE INCLUDED IN THE CONTRACT UNIT BID PRICE FOR WHICH IT IS APPLIED (SIDEWALK, CURB & GUTTER, DRIVEWAYS, ETC.)

5. EXISTING UNCONTAMINATED BASE COURSE MATERIAL MAY ALSO BE USED FOR THE PURPOSE OF BUILDING UP ENTRANCES FOR TEMPORARY ACCESS DURING CONSTRUCTION. HOWEVER, NO ADDITIONAL COMPENSATION WILL BE MADE BEYOND THE INITIAL EARTH EXCAVATION, ROADWAY CONTRACT UNIT BID PRICE FOR THE MATERIAL USED.

6. BITUMINOUS MATERIALS (PRIME COAT) SHALL BE APPLIED AT A RATE OF 0.075 GALLONS PER SQUARE YARD ON PAVED SURFACES AND 0.40 GALLONS PER SQUARE YARD ON AGGREGATE SURFACES.

7. ALL CONCRETE SHALL BE BROOM FINISHED WITH LETTER BOX JOINTS.

8. THE CONTRACTOR SHALL SUBMIT FOUR COPIES OF THE REQUIRED SHOP DRAWINGS FOR REVIEW AND APPROVAL BY THE ENGINEER. AFTER APPROVAL OF THE INITIAL SUBMITTAL, THE CONTRACTOR SHALL SUBMIT EIGHT SETS OF FINAL SHOP DRAWINGS TO BE DISTRIBUTED AS FOLLOWS:

    a. DISTRICT 2 REGIONAL ENGINEER (1)
    b. FABRICATOR (1)
    c. CONTRACTOR (2)
    d. RESIDENT ENGINEER (1)
    e. DISTRICT 2 BUREAU OF MATERIALS (2)

9. GROUND WATER MAY ENCROACH ON THE SUBSTRUCTURE ELEMENTS OF REQUIRED STRUCTURES. IT SHALL BE THE RESPONSIBILITY OF THE CONTRACTOR TO CONTROL THE GROUND WATER AND DIVERT THE STREAM FLOW DURING CONSTRUCTION IN ORDER TO KEEP THE CONSTRUCTION AREA FREE OF WATER. THE METHOD OF CONTROLLING WATER SHALL BE SUBJECT TO THE APPROVAL OF THE ENGINEER AND THE COST SHALL BE INCLUDED IN THE COST OF CONCRETE STRUCTURES.

TOPSOIL / SEEDING

1. DISTURBED AREAS ARE LOCATIONS WHERE THE CONTRACTOR'S OPERATIONS HAVE DAMAGED EXISTING GROUND COVER AND/OR TOPSOIL OUTSIDE OF THE LIMITS OF CONSTRUCTION AS SHOWN IN THE PLANS. SEEDING OF THESE DISTURBED AREAS IS INCLUDED IN ALL THE OTHER PROJECT PAY ITEMS AND NO ADDITIONAL COMPENSATION IS ALLOWED.

2. THE FINAL TOP 6 INCHES OF SOIL IN ANY AREA MUST BE A COHESIVE SOIL CAPABLE OF SUPPORTING VEGETATION.

3. FERTILIZER SHALL BE APPLIED AT A RATE OF 300 LBS/ACRE TO ALL DISTURBED AREAS AND INCORPORATED INTO THE SEEDBED PRIOR TO SOWING THE SEED. A SECOND FERTILIZER APPLICATION 3-WEEKS AFTER SEEDING OF 10-10-10, 250 LBS/ACRE, IF GOOD STAND IS ACHIEVED.

4. THE CONTRACTOR SHALL SEED ALL AREAS WITHIN THE LIMITS OF CONSTRUCTION WITH SEEDING, CLASS 1 IN ACCORDANCE WITH IDOT STANDARD SPECIFICATIONS OR AS APPROVED BY THE ENGINEER.

5. THE EXACT LOCATION OF PLANT PLACEMENT SHALL BE ADJUSTED IN THE FIELD TO AVOID UNDERGROUND AND OVERHEAD UTILITIES.

STRUCTURES

1. WHERE CALLED FOR ON THE PLANS, A WATERPROOFING MEMBRANE SHALL BE INSTALLED ACCORDING TO THE STANDARD SPECIFICATIONS FOR ROAD AND BRIDGE CONSTRUCTION. THE BUTYL RUBBER MEMBRANE SHALL EXTEND A MINIMUM OF ONE FOOT ON BOTH SIDES OF THE JOINT THAT IT IS INSTALLED TO SEAL, AND FOR THE FULL HEIGHT OF THE JOINT. MATERIAL FOR THE MEMBRANE SHALL CONFORM TO THE MATERIAL REQUIREMENTS OF SECTION 1060.09 OF THE STANDARD SPECIFICATIONS. THIS ITEM IS INTENDED FOR USE WHEREVER A CAST-IN-PLACE OR SOLDIER PILE WALL MEETS A PRECAST MODULAR BLOCK WALL AND FOR EXPANSION JOINTS WHERE INDICATED ON THE PLANS. USE OF THIS ITEM SHALL BE KEPT TO THE MINIMUM NECESSARY TO SEAL DISSIMILAR JOINTS AND NOT AS A GENERAL WALL TREATMENT. THE COST OF THIS ITEM SHALL BE INCLUDED IN THE COST OF CONCRETE STRUCTURES.

2. ALL JOINTS SHALL BE SEALED IN ACCORDANCE WITH THE STANDARD SPECIFICATIONS. THE CONTRACTOR SHALL TAKE NOTE THAT THE FORM LINER TEXTURED SURFACE WILL BE STAINED AND A COMPLEMENTARY COLOR SEALANT MUST BE USED. SUBMIT SAMPLES TO THE ENGINEER PRIOR TO ORDERING OR APPLICATION.

3. A STRUCTURE GEOTECHNICAL REPORT WITH ONE AMENDMENT WAS COMPLETED AS PART OF THIS PROJECT. THE SOIL BORING LOGS ARE INCLUDED IN THE CONTRACT DOCUMENTS. IF THE CONTRACTOR WISHES TO REVIEW THE COMPLETE REPORT, A COPY IS AVAILABLE FROM McCLURE ENGINEERING OR THE CITY OF ROCKFORD.

SHEET REVIEW	
AGENCY	DATE

REVISIONS		
NO.	ITEM	DATE

SCALE:	Hor. 1"=40'
DRAWN BY:	BCS
CHECKED BY:	JWH
DATE:	AUGUST 13, 2010

McClure
Engineering Associates, Inc.
7282 Argus Drive
(815) 398-2332
Rockford, Illinois 61107-5837
FAX (815) 398-2496
Design Firm License: Illinois 184-000816

GENERAL NOTES

RIVERWALK MUSEUM CAMPUS

711 NORTH MAIN STREET
ROCKFORD, IL

FILE: H:\08-008 RIVERWALK MUSEUM\DESIGN\DRAWINGS\08-008 GENERAL NOTES.DWG
JOB: 04-28-10-008

H:\08-008 RIVERWALK MUSEUM\DESIGN\DRAWINGS\08-008 GENERAL NOTES.DWG, GENERAL NOTES, 9/1/2010 2:30:26 PM, 1:1, MONTY

F.A. RTE.	SECTION	COUNTY	TOTAL SHEETS	SHEET NO.
	06-00543-00-BT	WINNEBAGO	148	3
FED. ROAD DIST. NO.		ILLINOIS	CONTRACT NO.	85521

SUMMARY OF QUANTITIES

CONSTRUCTION TYPE CODE 0038 AND 0042

	SP	CODED PAY ITEM	ITEM	UNIT	QUANTITY
	*	20100110	TREE REMOVAL (6 TO 15 UNITS DIAMETER)	UNIT	2847
	*	20100210	TREE REMOVAL (OVER 15 UNITS DIAMETER)	UNIT	544
		20101100	TREE TRUNK PROTECTION	EACH	3
		20101700	SUPPLEMENTAL WATERING	UNIT	10
		20200100	EARTH EXCAVATION	CU YD	4576
	*	20300100	CHANNEL EXCAVATION	CU YD	1476
	*	20400800	FURNISHED EXCAVATION	CU YD	362
		20700220	POROUS GRANULAR EMBANKMENT	CU YD	203
		20800150	TRENCH BACKFILL	CU YD	685
	*	21000310	GRANULAR EMBANKMENT, (SPECIAL)	CU YD	547
Δ	*	21101625	TOPSOIL FURNISH AND PLACE 6"	SQ YD	6340
Δ	*	25000100	SEEDING, CLASS 1	ACRE	0.85
Δ	*	25000300	SEEDING CLASS 3	ACRE	0.10
Δ		25000400	NITROGEN FERTILIZER NUTRIENTS	POUND	90
Δ		25000500	PHOSPHORUS FERTILIZER NUTRIENTS	POUND	90
Δ		25000600	POTASSIUM FERTILIZER NUTRIENTS	POUND	90
Δ		25100630	EROSION CONTROL BLANKET	SQ YD	4750
Δ	*	25200100	SODDING	SQ YD	135
Δ	*	28000250	TEMPORARY EROSION CONTROL SEEDING	POUND	150
		28000400	PERIMETER EROSION BARRIER	FOOT	538
		28000500	INLET AND PIPE PROTECTION	EACH	19
		28200200	FILTER FABRIC	SQ YD	1735
		31101000	SUB-BASE GRANULAR MATERIAL, TYPE B	TON	1721
		35101400	AGGREGATE BASE COURSE, TYPE B	TON	1999
		40600200	BITUMINOUS MATERIALS (PRIME COAT)	TON	11.3
		40600300	AGGREGATE (PRIME COAT)	TON	15.2
		40603080	HOT-MIX ASPHALT BINDER COURSE, IL-19.0, N50	TON	544
		40603310	HOT-MIX ASPHALT SURFACE COURSE, MIX C, N50	TON	326
	*	42000210	PCC PAVEMENT 7 1/2"	SQ YD	426.8
		42300400	PCC DRIVEWAY PAVEMENT 8"	SQ YD	540
	*	42400300	PCC SIDEWALK, 6"	SQ FT	13950
		42400800	DETECTABLE WARNINGS	SQ FT	102
		44000500	COMBINATION CURB AND GUTTER REMOVAL	FOOT	1118
		44000600	SIDEWALK REMOVAL	SQ FT	4246
		44213200	SAW CUTS	FOOT	1262
	*	50104400	CONCRETE HEADWALL REMOVAL	EACH	1
	*	50200100	STRUCTURE EXCAVATION	CU YD	1467
		50200450	REMOVAL AND DISPOSAL OF UNSUITABLE MATERIALS FOR STRUCTURES	CU YD	100
		50300225	CONCRETE STRUCTURES	CU YD	814.4
		50300254	RUBBED FINISH	SQ FT	3977
	*	50300285	FORM LINER TEXTURED SURFACE	SQ FT	7755
		50300300	PROTECTIVE COAT	SQ YD	1823
		50500505	STUD SHEAR CONNECTERS	EACH	2162
		50800105	REINFORCEMENT BARS	POUND	9101
		50800205	REINFORCEMENT BARS (EPOXY COATED)	POUND	68729
Δ	*	50901760	PIPE HANDRAIL	FOOT	774
		54213669	PRECAST REINFORCED CONCRETE FLARED END SECTION, 24"	EACH	1
		550A0050	STORM SEWERS, CLASS A, TYPE 1 12"	FOOT	164
		550A0070	STORM SEWERS, CLASS A, TYPE 1 15"	FOOT	84
		550A0090	STORM SEWERS, CLASS A, TYPE 1 18"	FOOT	134
		550A0120	STORM SEWERS, CLASS A, TYPE 1 24"	FOOT	62
		550B0020	STORM SEWERS CLASS B, TYPE 1, 6"	FOOT	61
		58700300	CONCRETE SEALER	SQ FT	304
		59100100	GEOCOMPOSITE WALL DRAIN	SQ YD	451.1
		Z0046304	PIPE UNDERDRAINS FOR STRUCTURES 4"	FOOT	850
		60218400	MANHOLES, TYPE A, 4'-DIAMETER, TYPE 1 FRAME, CLOSED LID	EACH	4
		60224600	RESTRICTED DEPTH MANHOLE, 4' DIA., WITH TYPE 1 FRAME AND CLOSED LID	EACH	1
		60236200	INLET, TYPE A WITH TYPE 8 GRATE	EACH	1
	*	60242500	INLETS, SPECIAL,No.1	EACH	4
	*	60242600	INLET SPECIAL No. 2	EACH	3
	*	60246541	INLET BOX, SPECIAL, No.1	EACH	2
		60258100	MANHOLES TO BE RECONSTRUCTED WITH NEW TYPE 1 FRAME, OPEN LID	EACH	1
	*	60260050	SANITARY MANHOLE TO BE RECONSTRUCTED	EACH	4
		60260100	INLETS TO BE ADJUSTED	EACH	6
		60500060	REMOVE INLETS	EACH	10
		60602800	CONCRETE GUTTER, TYPE B	FOOT	167

* SPECIAL PROVISION
Δ SPECIALTY ITEMS

	SP	CODED PAY ITEM	ITEM	UNIT	QUANTITY
	*	60604700	COMBINATION CURB AND GUTTER TYPE M-6.18 (MOD)	FOOT	1222
		60618320	CONCRETE MEDIAN SURFACE, 6 INCH	SQ FT	540
Δ	*	63000130	STEEL PLATE BEAM GUARD RAIL (SPECIAL)	FOOT	246
		63200310	GUARD RAIL REMOVAL	FOOT	320
		67100100	MOBILIZATION	L S	1
	*	70101700	TRAFFIC CONTROL AND PROTECTION	L S	1
Δ		78001110	PAINT PAVEMENT MARKING - LINE 4"	FOOT	1726
Δ		78200455	BIDIRECTIONAL GUARD RAIL REFLECTORS	EACH	15
	*	78300100	PAVEMENT MARKING REMOVAL	SQ FT	170
Δ	*	80400105	ELECTRIC SERVICE INSTALLATION (SPECIAL)	EACH	1
Δ	*	X8570015	CONTROLLER, SPECIAL	EACH	1
Δ		81012300	CONDUIT IN TRENCH, 1" DIAMETER PVC	FOOT	2625
Δ		81012600	CONDUIT IN TRENCH, 2" DIAMETER PVC	FOOT	1930
Δ		81104200	CONDUIT ATTACHED TO STRUCTURE 3/4", INTERMEDIATE METAL	FOOT	1050
Δ		81300100	JUNCTION BOX, STAINLESS STEEL ATTACHED TO STRUCTURE 4"X4"X3"	EACH	38
Δ		81301400	JUNCTION BOX, STAINLESS STEEL EMBEDDED IN STRUCTURE 18"X18"X6"	EACH	12
Δ		81400115	HANDHOLE TO BE ADJUSTED	EACH	3
Δ		81400730	HANDHOLE, COMPOSITE CONCRETE	EACH	6
Δ		81603100	UNIT DUCT, 600v, 4 1/C No. 6, 1/C No. 6 GROUND (XLP USE), 1 1/4" DIA. POLY.	FOOT	1880
Δ		81702110	ELECTRIC CABLE IN CONDUIT, 600V(XLP-TYPE USE) 1/C NO. 10	FOOT	350
Δ		81702120	ELECTRIC CABLE IN CONDUIT, 600V (XLP-TYPE USE) 1/C No 8	FOOT	18620
Δ		81702400	ELECTRIC CABLE IN CONDUIT, 600V (XLP-TYPE USE) 3-1/C No 2	FOOT	4905
Δ		81900200	TRENCH AND BACKFILL FOR ELECTRICAL WORK	FOOT	4560
Δ		83600120	LIGHT POLE FOUNDATION, SPECIAL	FOOT	30
Δ		83600200	LIGHT POLE FOUNDATION, 24" DIAMETER	FOOT	90
Δ		84200500	REMOVAL OF EXISTING LIGHTING UNIT, SALVAGE	EACH	5
Δ		84200804	REMOVAL OF POLE FOUNDATION	EACH	5
Δ	*	88102845	PEDESTRIAN SIGNAL HEAD, POLYCARBONATE, LED, 2-FACE, BRACKET MOUNTED WITH COUNT DOWN TIMER	EACH	8
Δ	*	Z0032042	REMOVE EXISTING TRAFFIC SIGNAL EQUIPMENT	LS	1
Δ		A2000118	TREE, ACER X FREEMANII AUTUMN BLAZE (AUTUMN BLAZE FREEMAN MAPLE), 3" CALIPER, BALLED AND BURLAPPED	EACH	3
Δ		A2005424	TREE, LIRIODENDRON TULIPIFERA (TULIP TREE), 3" CALIPER, BALLED AND BURLAPPED	EACH	3
Δ		A2005920	TREE, PLATANUS X ACERIFOLIA BLOODGOOD (BLOODGOOD LONDON PLANETREE), 2-1/2" CALIPER, BALLED AND BURLAPPED	EACH	4
Δ		A2006524	TREE, QUERCUS BICOLOR (SWAMP WHITE OAK), 3" CALIPER, BALLED AND BURLAPPED	EACH	3
Δ		A2006624	TREE, QUERCUS IMBRICARIA (SHINGLE OAK), 3" CALIPER, BALLED AND BURLAPPED	EACH	3
Δ		A2006726	TREE, QUERCUS MACROCARPA (BUR OAK), 3" CALIPER, BALLED AND BURLAPPED	EACH	2
Δ		A2007122	TREE, QUERCUS RUBRA (RED OAK), 3" CALIPER, BALLED AND BURLAPPED	EACH	3
Δ		B2000768	TREE, AMELANCHIER X GRANDIFLORA AUTUMN BRILLIANCE (AUTUMN BRILLIANCE SERVICE BERRY), 7' HEIGHT, SHRUB FORM, BALLED AND BURLAPPED	EACH	6
Δ		B2001668	TREE, CRATAEGUS CRUSGALLI INERMIS (THORN LESS COCKSPUR HAWTHORN), 7' HEIGHT, SHRUB FORM, BALLED AND BURLAPPED	EACH	5
Δ		C2004536	SHRUB, MYRICA PENSYLVANICA (BAYBERRY), 3' HEIGHT, BALLED AND BURLAPPED	EACH	29
Δ		C2007224	SHRUB, ROSA KNOCKOUT (KNOCKOUT ROSE), 24" HEIGHT, CONTAINER	EACH	50
Δ		C2C03424	SHRUB, HYDRANGEA ARBORESCENS ANNABELLE (ANNABELLE SMOOTH HYDRANGEA), 2' HEIGHT CONTAINER	EACH	89
Δ		C2C03428	SHRUB, HYDRANGEA MACROPHYLLA ENDLESS SUMMER (ENDLESS SUMMER BIGLEAF HYDRANGEA), 2' HEIGHT CONTAINER	EACH	22
Δ		C2C05824	SHRUB, RHUS AROMATICA GRO-LOW (GRO-LOW FRAGRANT SUMAC), 2' WIDTH, CONTAINER	EACH	71
Δ		D2C00624	EVERGREEN, JUNIPERUS CHINENSIS SEA GREEN (SEA GREEN JUNIPER), 2' WIDTH, CONTAINER	EACH	97
Δ		D2C00724	EVERGREEN, JUNIPERUS CHINENSIS VAR. SARGENTII VIVIDIS (GREEN SARGENT JUNIPER), 2' WIDTH, CONTAINER	EACH	28
Δ		D2C03524	EVERGREEN, TAXUS X MEDIA DENSIFORMIS DENSE ANGLOJAPANESE YEW), 2' WIDTH, CONTAINER	EACH	77
Δ	*	K0012990	PERENNIAL PLANT ORNAMENTAL TYPE GALLON POT	UNIT	169.5
Δ	*	K1005481	SHREDDED BARK MULCH 3"	SQ YD	2650
	*	X0301446	GATE, SPECIAL	EACH	1
	*	X0322118	REMOVE CONCRETE FLARED END SECTIONS	EACH	1
	*	X0324450	SEGMENTAL CONCRETE BLOCK WALL, SPECIAL	SQ FT	105
	*	X0324455	DRILLING AND SETTING SOLDIER PILE IN SOIL	CU FT	6049
	*	X0324456	DRILLING AND SETTING SOLDIER PILE IN ROCK	CU FT	8880
	*	X0326146	SOIL CONDITIONER	SQ YD	1590

	SP	CODED PAY ITEM	ITEM	UNIT	QUANTITY	TYPE CODE 0042
Δ	*	X0326498	GFCI 20 AMP DUPLEX RECEPTACLE	EACH	15	
	*	X2810110	STONE RIPRAP, CLASS A5 (SPECIAL)	SQ YD	1973	
	*	X4240440	PCC SIDEWALK, 6" (SPECIAL)	SQ FT	5083	
	*	X5015225	PIPE CULVERT REMOVAL (SPECIAL)	FOOT	552	
	*	X5021410	ROCK EXCAVATION FOR STRUCTURES (SPECIAL)	CU YD	191.9	
Δ	*	X5090810	PEDESTRIAN RAIL (SPECIAL)	FOOT	531	
	*	X5150110	NAME PLATES (SPECIAL)	EACH	2	
	*	X6026050	SANITARY MANHOLES TO BE ADJUSTED	EACH	1	
	*	XX001249	ORNAMENTAL FENCE	FOOT	150	
	*	XX003308	TRENCH DRAIN	FOOT	80	
Δ	*	XX003885	IRRIGATION SYSTEM	L SUM	1	
	*	Z0003855	BICYCLE RACKS	EACH	10	
	*	XX005913	TEMPORARY ACCESS CAUSEWAY	L SUM	1	
	*	XX005963	ANTI-GRAFFITI COATING	SQ FT	1256	
	*	XX007023	STAINING CONCRETE STRUCTURES	SQ YD	78	
	*	XX007107	SILT CURTAIN	FOOT	600	
	*	XX007297	MASONRY COLUMN, LARGE	EACH	2	
	*	XX007298	MASONRY COLUMN, SMALL	EACH	7	
	*	XX008402	TIMBER DECK REMOVE AND REPLACE	L SUM	1	
Δ		X7800630	URETHANE PAVEMENT MARKING - LINE 6"	FOOT	172	
Δ		X7800680	URETHANE PAVEMENT MARKING - LINE 24"	FOOT	44	
	*	Z0004542	HOT-MIX ASPHALT SURFACE REMOVAL (SPECIAL)	SQ YD	795	
		X4402020	CONCRETE MEDIAN SURFACE REMOVAL	SQ FT	540	
	*	Z0006700	BRIDGE DRAINAGE SYSTEM	EACH	2	
		Z0007118	UNTREATED TIMBER LAGGING	SQ FT	3570	
	*	Z0007120	WELDED WIRE FABRIC 6" X 6"	SQ YD	547	
	*	Z0007601	BUILDING REMOVAL No. 1	L SUM	1	
	*	Z0007602	BUILDING REMOVAL No. 2	L SUM	1	
	*	Z0026404	FURNISHING SOLDIER PILES (W SECTION)	FOOT	2544	
	*	Z0043750	PRECAST MODULAR BLOCK WALL	SQ FT	6326	
Δ	*	Z0056700	SANITARY SEWER 4"	FOOT	15	
	*	Z0064540	SEEPAGE COLLAR	EACH	5	
	*	Z0065000	SETTING PILE IN ROCK	EACH	16	
	*	Z0075496	CONCRETE RETAINING WALL REMOVAL	FOOT	71	
	*	XX008423	PRECAST CONCRETE LAGGING	SQ FT	1616	
Δ	*	XX008424	LIGHT FIXTURE ASSEMBLY, TYPE A	EACH	15	
Δ	*	XX008425	LIGHT FIXTURE ASSEMBLY, TYPE B	EACH	11	
Δ	*	XX008426	LIGHT FIXTURE ASSEMBLY, TYPE C	EACH	11	
Δ	*	XX008427	LIGHT FIXTURE ASSEMBLY, TYPE D	EACH	16	
Δ	*	XX008428	LIGHT FIXTURE ASSEMBLY, TYPE E	EACH	16	
Δ	*	XX008429	LIGHT FIXTURE ASSEMBLY, TYPE F	EACH	6	
Δ	*	XX008430	LIGHT FIXTURE ASSEMBLY, TYPE G	EACH	4	
Δ	*	XX008431	PANEL BOARD, NEMA X4, SPECIAL	EACH	1	
	*	X0322508	PEDESTRIAN TRUSS SUPERSTRUCTURE	SQ FT	1097	
	*	XX008421	PEDESTRIAN TRUSS SUPERSTRUCTURE, PREFABRICATED CABLE STAYED	SQ FT	2740	
		Z0076600	TRAINEES	HOUR		500

SHEET REVIEW	
AGENCY	DATE

REVISIONS		
NO.	ITEM	DATE

SCALE:	N/A
DRAWN BY:	MS
CHECKED BY:	JWH
DATE:	AUGUST 13, 2010

McClure Engineering Associates, Inc.
7282 Argus Drive Rockford, Illinois 61107-5837
(815) 398-2332 FAX (815) 398-2496
Design Firm License: Illinois 184-000816

SUMMARY OF QUANTITIES
RIVERWALK MUSEUM CAMPUS
711 NORTH MAIN STREET ROCKFORD, IL
FILE:H:\08-008 RIVERWALK MUSEUM\DESIGN\DRAWINGS\08-008 SUMMARY.DWG JOB:04-28-10-008

PROJECT SCHEDULE

F.A. RTE.	SECTION	COUNTY	TOTAL SHEETS	SHEET NO.
	06-00543-00-BT	WINNEBAGO	148	4
FED. ROAD DIST. NO.		ILLINOIS	CONTRACT NO.	85521

FOR INFORMATION ONLY

	WORK TASK	WORKING DAYS
1	PRE-CONSTRUCTION MEETING	
2	CLEARING AND TREE REMOVAL	6
3	BUILD CAUSEWAY	30
4	INSTALL EROSION CONTROL	3
5	REMOVE DISCOVERY CENTER WALKWAY	2
6	EXCAVATE PLATFORM TO DRILL SOLDIER PILE	8
7	SUBMIT SHOP DRAWINGS FOR STRUCTURAL	
8	SUBMIT SHOP DRAWINGS FOR ELECTRICAL	
9	SUBMIT SHOP DRAWINGS FOR RAILING	
10	DRILL SOLDIER PILE SHAFTS	35
11	INSTALL SOLDIER PILE AND BACKFILL WITH CLSM	12
12	EXCAVATE AND INSTALL LAGGING	25
13	BUILD FORM LINER MOCK-UP	1
14	FORM AND POUR SOLDIER PILE WALL FACE	45
15	DRILL AND SET PILE FOR ABUTMENTS AND PIER	10
16	FORM AND POUR ABUTMENTS	32
17	FORM AND POUR PIER	16
18	FORM AND POUR CAST IN PLACE WALL	10
19	FORM AND POUR OVERLOOK PAVING	25
20	EXCAVATE TO FINAL LINE AND GRADE BELOW SP WALLS	20
21	INSTALL STORM SEWER	14
22	REMOVE CURB & GUTTER, SIDEWALK, RETAINING WALL, ETC.	4
23	REDUCE CAUSEWAY TO SINGLE LANE	16
24	PLACE RIPRAP IN FRONT OF WALLS AND BELOW BRIDGES	12
25	BACKFILL SOLDIER PILE WALLS AND EXCAVATE FOR STONE STRONG WALLS	20
26	SET LOWER STONE STRONG WALLS AND BACKFILL	15
27	SET BRIDGES AND ANCHOR IN FINAL POSITION	12
28	POUR CONCRETE BRIDGE DECKS	8
29	REMOVE CAUSEWAY AND RESTORE RIVER BED	18
30	EXCAVATE AND BUILD STAIRWAYS	13
31	EXCAVATE FOR AMPHITHEATER AND BURPEE SIDEWALK	5
32	BUILD MODULAR BLOCK WALL AT BOATHOUSE	2
33	INSTALL WATER SERVICES AND IRRIGATION SYSTEM	8
34	INSTALL ELECTRIC CONDUIT AND PULL BOXES	5
35	EXCAVATE AND INSTALL UPPER LEVEL STONE STRONG WALLS	26
36	INSTALL CURB & GUTTER AND ADJUST INLETS	5
37	FINISH GRADING IN RMP PARKING LOT	2
38	PLACE STONE IN RMP PARKING LOT	3
39	FINISH GRADING FOR SIDEWALK	5
40	PAVE PARKING LOT	2
41	INSTALL LIGHTING CONTROLLER AND TRANSFORMER	4
42	CONNECT LIGHTING CONTROLLER TO SERVICE POINT BY COMED	
43	PLACE TOPSOIL	10
44	PAVE SIDEWALK	9
45	BUILD COLUMNS	14
46	INSTALL LIGHT POLES AND FIXTURES	8
47	STAIN WALLS	10
48	INSTALL OVERLOOK STRUCTURAL PAVING	15
49	FORM AND POUR AMPHITHEATER	18
50	REMOVE ISLANDS AND CURB RAMPS AT MAIN & WHITMAN	1
51	POUR NEW ACCESSABLE ISLANDS	5
52	REPLACE TRAFFIC SIGNAL EQUIPMENT	3
53	CONSTRUCT HILL IMPROVEMENTS	5
54	RE-INSTALL DISCOVERY CENTER WALKWAY	5
55	INSTALL RAILING	16
56	INSTALL PLANTING BEDS, TREES AND SHRUBS	12
57	PERFORM PERMANENT SEEDING	3
58	INSTALL ANTI-GRAFFITI COATING	2
59	INSTALL BENCHES, BIKE RACKS, AND TRASH RECEPTICALS	4
60	FINAL ADJUSTMENT, TESTING, AND INSPECTION	2
61	PAVEMENT MARKING	2
62	PUNCH LIST ITEMS	10

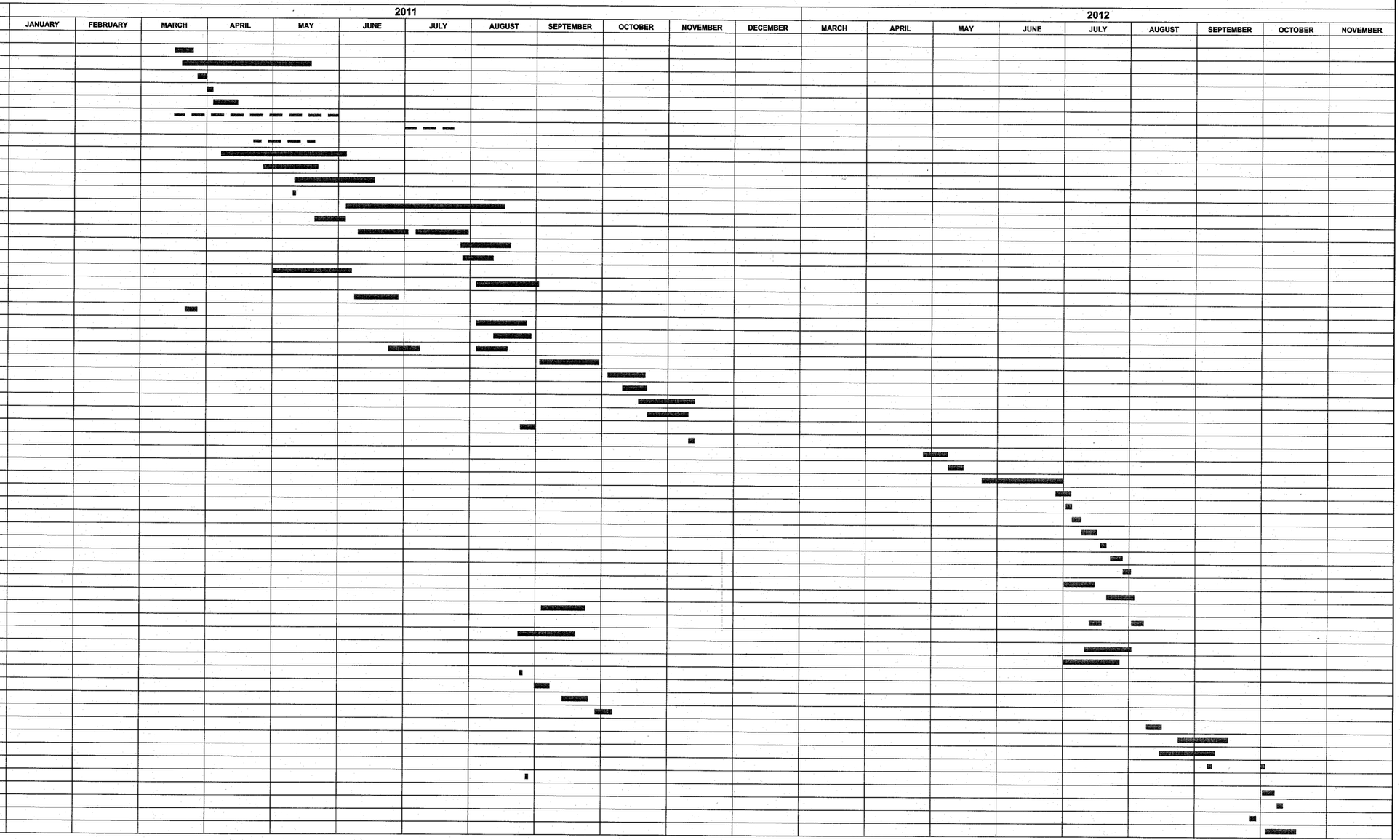

TOTAL	681 DAYS
TIME FROM OVERLAPPING OPERATIONS	161 DAYS
TOTAL WORKING DAYS	520 DAYS

SHEET REVIEW	
AGENCY	DATE

REVISIONS		
NO.	ITEM	DATE

SCALE:	Hor. 1"=40'
DRAWN BY:	BCS
CHECKED BY:	JWH
DATE:	AUGUST 13, 2010

McClure Engineering Associates, Inc.
7282 Argus Drive
(815) 398-2332
Rockford, Illinois 61107-5837
FAX (815) 398-2496
Design Firm License: Illinois 184-000816

PROJECT SCHEDULE
RIVERWALK MUSEUM CAMPUS
711 NORTH MAIN STREET — ROCKFORD, IL
FILE: H:\08-008 RIVERWALK MUSEUM\DESIGN\DRAWINGS\08-008 PROJECT SCHEDULE.DWG — JOB: 04-28-10-008

SHEET NO. 4 OF 148

F.A. RTE.	SECTION	COUNTY	TOTAL SHEETS	SHEET NO.
	06-00543-00-BT	WINNEBAGO	148	5
FED. ROAD DIST. NO.	ILLINOIS	CONTRACT NO.		85521

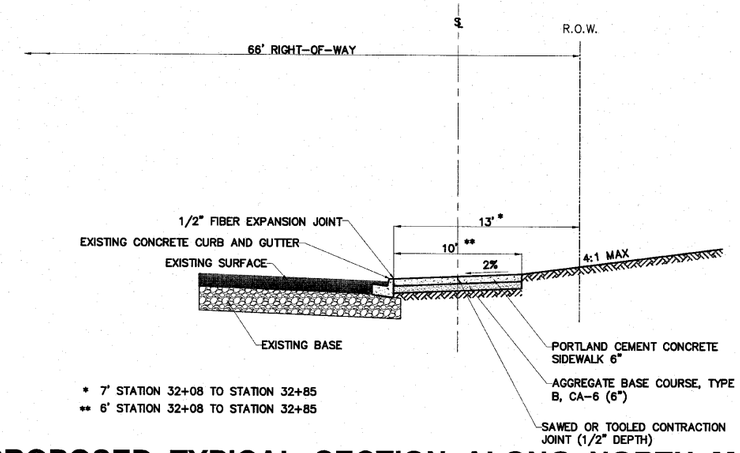

PROPOSED TYPICAL SECTION ALONG NORTH MAIN STREET
STATION 24+28 to 25+23
STATION 32+08 to 32+85

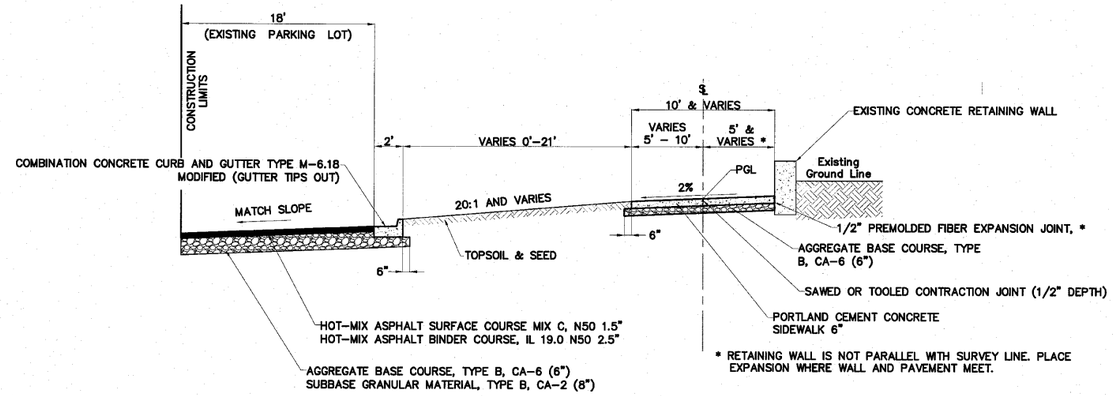

PROPOSED TYPICAL SECTION
STATION 200+04 to 200+39
201+57 to 201+65
202+38 to 203+01

INTENTIONALLY BLANK

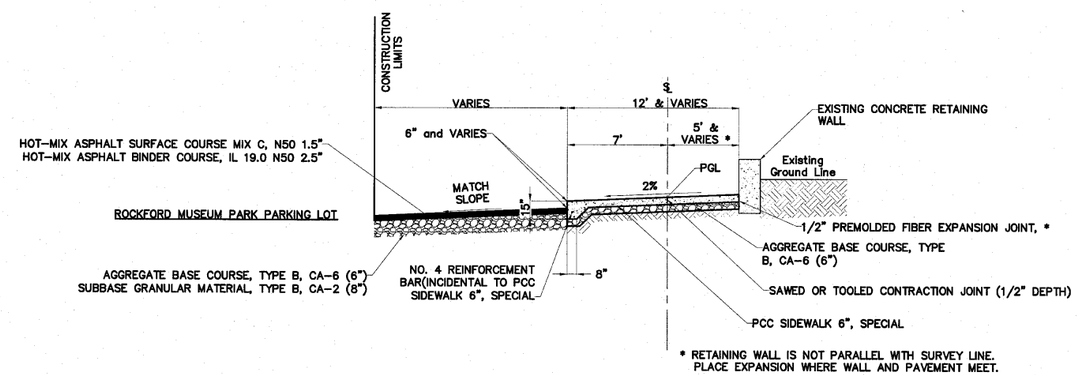

MIX USES:	Surface	Binder
PG:	PG 64-22	PG 64-22
Design Air Voids	4.0 @ N50	4.0 @ N50
Mixture Composition	IL 9.5 or 12.5	IL 19.0
Friction Aggregate	C	N/A
Mix Unit Weight	112 lbs/SY/in	

PROPOSED TYPICAL SECTION
STATION 200+39 to 201+57
STATION 201+65 to 202+38

SHEET REVIEW	
AGENCY	DATE

REVISIONS		
NO.	ITEM	DATE

SCALE:	N/A
DRAWN BY:	MS
CHECKED BY:	JWH
DATE:	AUGUST 13, 2010

McClure Engineering Associates, Inc.
7282 Argus Drive
(815) 398-2332
Rockford, Illinois 61107-5837
FAX (815) 398-2496
Design Firm License: Illinois 184-000816

TYPICAL SECTION
RIVERWALK MUSEUM CAMPUS
711 NORTH MAIN STREET — ROCKFORD, IL
FILE:H:\08-008 RIVERWALK MUSEUM\DESIGN\DRAWINGS\08-008 TYPICAL SECTIONS.DWG — JOB:04-28-10-008

SHEET NO. 5 OF 148

F.A. RTE.	SECTION	COUNTY	TOTAL SHEETS	SHEET NO.
	06-00543-00-BT	WINNEBAGO	148	6
FED. ROAD DIST. NO.	ILLINOIS	CONTRACT NO.		85521

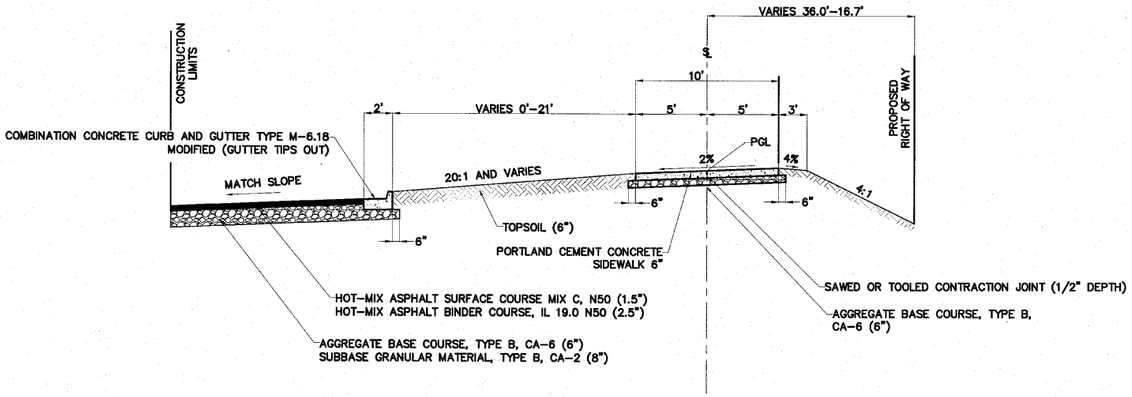

PROPOSED TYPICAL SECTION
STATION 203+01 to 203+51

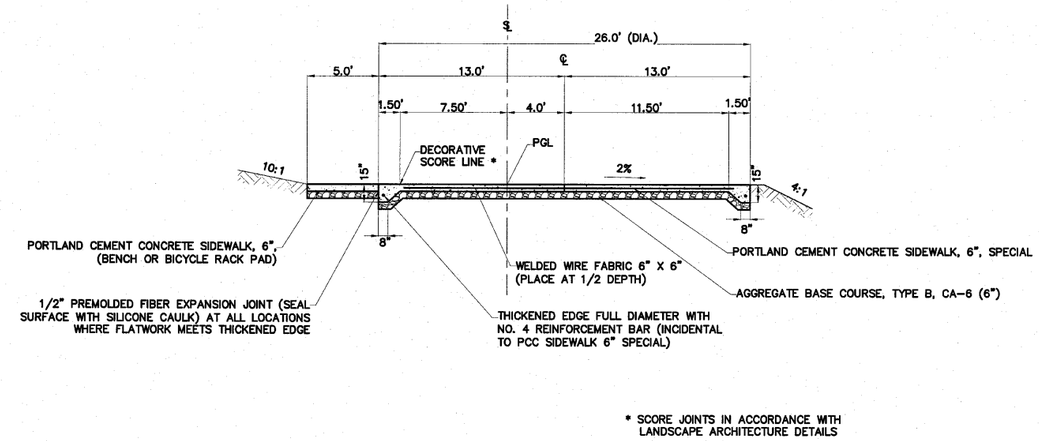

* SCORE JOINTS IN ACCORDANCE WITH LANDSCAPE ARCHITECTURE DETAILS

PROPOSED TYPICAL SECTION
STATION 203+51 to 203+76
STATION 205+60 to 205+86

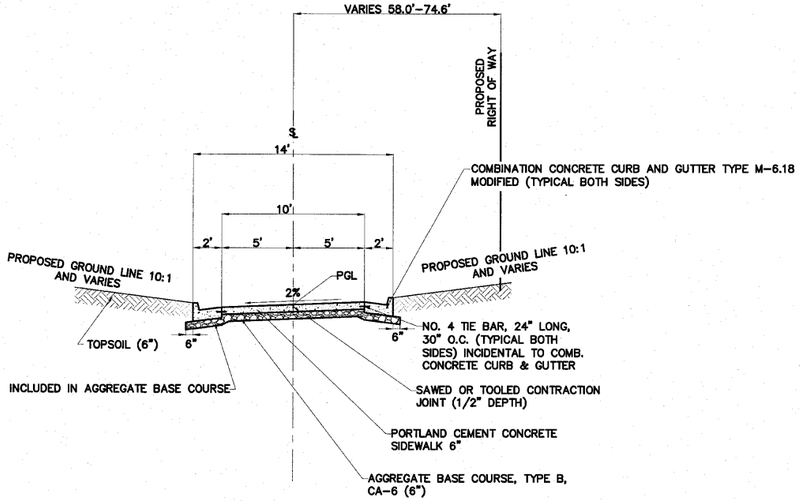

PROPOSED TYPICAL SECTION
STATION 203+76 to 205+60

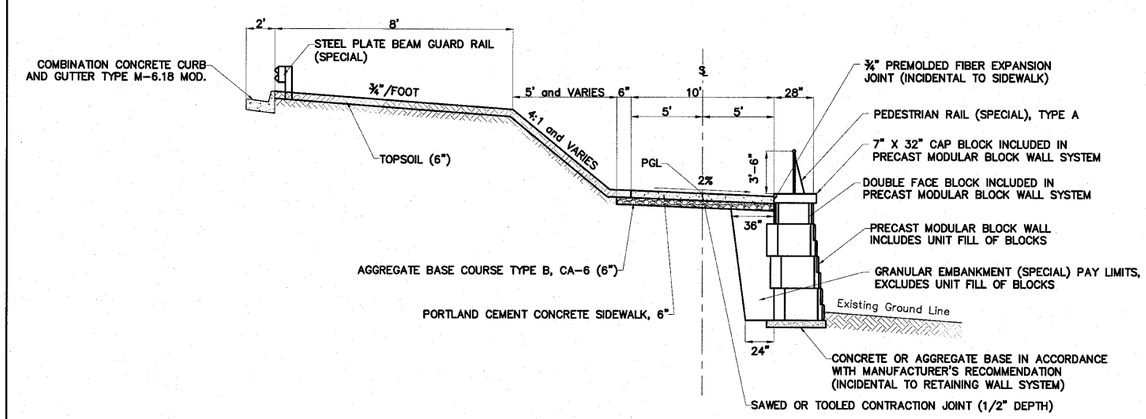

PROPOSED TYPICAL SECTION
STATION 205+86 to 206+90

SHEET REVIEW	
AGENCY	DATE

REVISIONS		
NO.	ITEM	DATE

SCALE:	N/A
DRAWN BY:	MS
CHECKED BY:	JWH
DATE:	AUGUST 13, 2010

McClure Engineering Associates, Inc.
7282 Argus Drive (815) 398-2332
Rockford, Illinois 61107-5837 FAX (815) 398-2496
Design Firm License: Illinois 184-000816

TYPICAL SECTION
RIVERWALK MUSEUM CAMPUS
711 NORTH MAIN STREET ROCKFORD, IL
FILE:H:\08-008 RIVERWALK MUSEUM\DESIGN\DRAWINGS\08-008 TYPICAL SECTIONS.DWG JOB:04-28-10-008

SHEET NO. 6 OF 148

F.A. RTE.	SECTION	COUNTY	TOTAL SHEETS	SHEET NO.
	06-00543-00-BT	WINNEBAGO	148	7
FED. ROAD DIST. NO.	ILLINOIS	CONTRACT NO.		85521

INTENTIONALLY BLANK

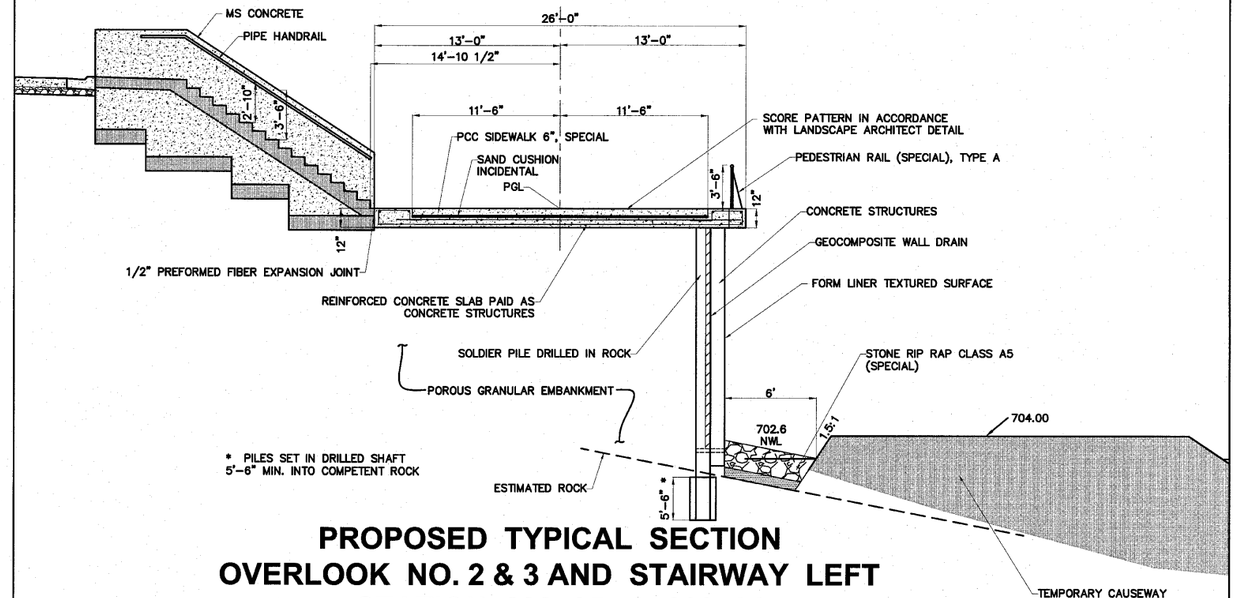

PROPOSED TYPICAL SECTION
OVERLOOK NO. 2 & 3 AND STAIRWAY LEFT
STATION 208+05 to 208+31
AND OVERLOOK No. 3 210+65 to 210+90

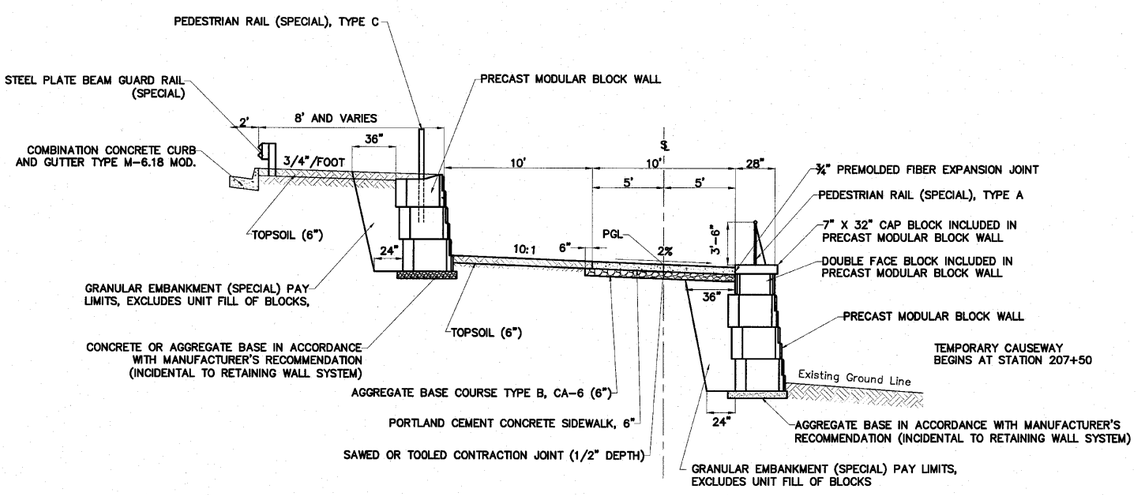

PROPOSED TYPICAL SECTION
STATION 206+90 to 208+05

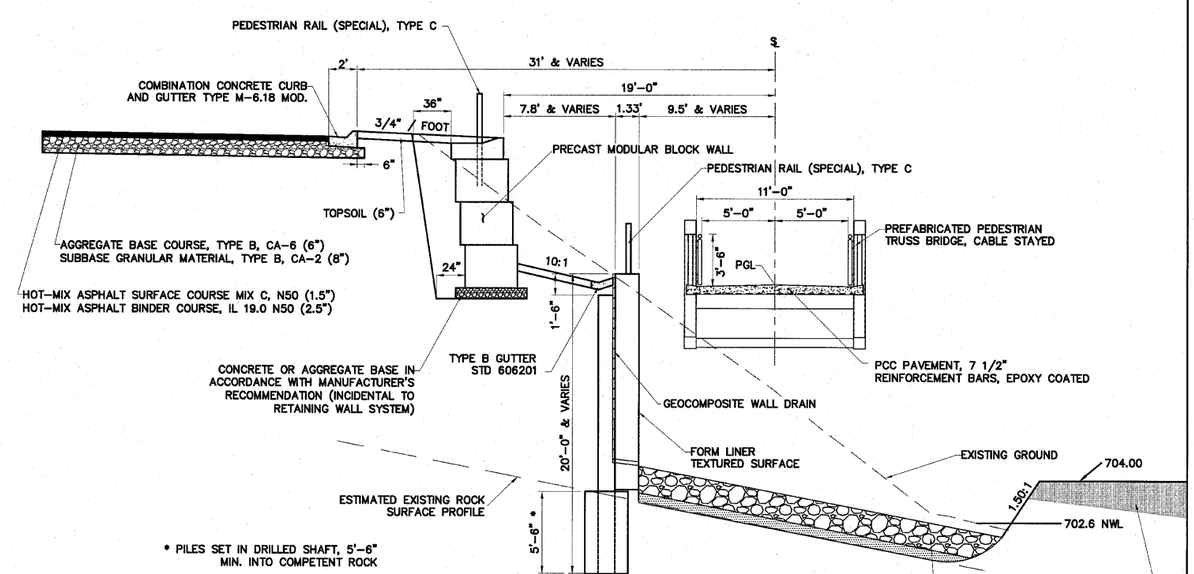

PROPOSED TYPICAL SECTION
STATION 208+31 to 210+17

SHEET REVIEW	
AGENCY	DATE

REVISIONS		
NO.	ITEM	DATE

SCALE:	N/A
DRAWN BY:	MS
CHECKED BY:	JWH
DATE:	AUGUST 13, 2010

McClure Engineering Associates, Inc.
7282 Argus Drive
(815) 398-2332
Rockford, Illinois 61107-5837
FAX (815) 398-2496
Design Firm License: Illinois 184-000816

TYPICAL SECTION
RIVERWALK MUSEUM CAMPUS
711 NORTH MAIN STREET — ROCKFORD, IL
FILE: H:\08-008 RIVERWALK MUSEUM\DESIGN\DRAWINGS\08-008 TYPICAL SECTIONS.DWG — JOB: 04-28-10-008

F.A. RTE.	SECTION	COUNTY	TOTAL SHEETS	SHEET NO.
	06-00543-00-BT	WINNEBAGO	148	8
FED. ROAD DIST. NO.	ILLINOIS	CONTRACT NO.		85521

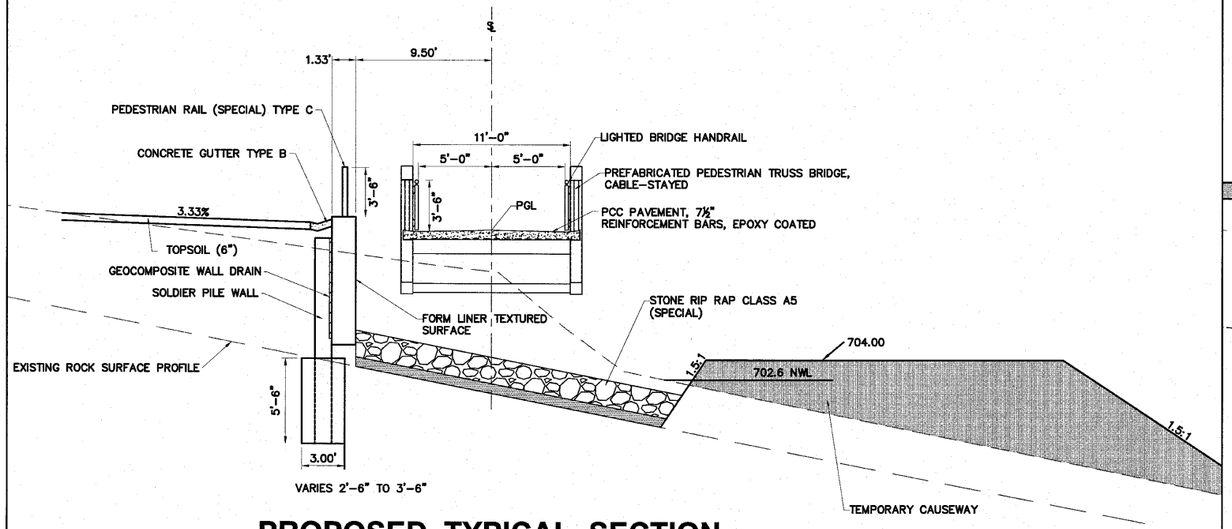

PROPOSED TYPICAL SECTION
STATION 210+17 to 210+65

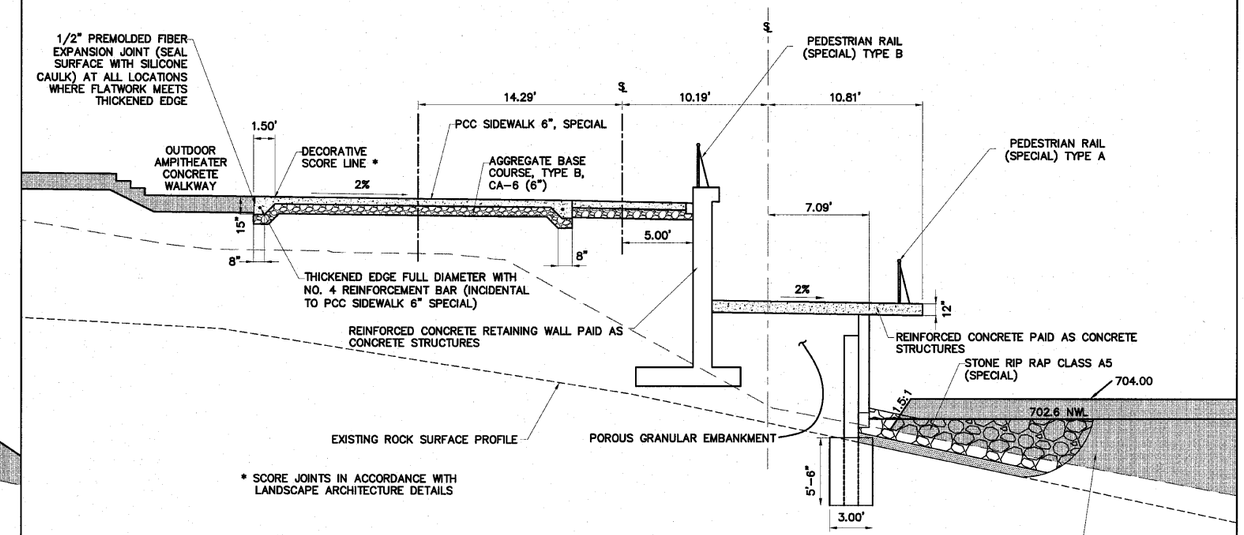

PROPOSED TYPICAL SECTION
STATION 211+87 to 212+36

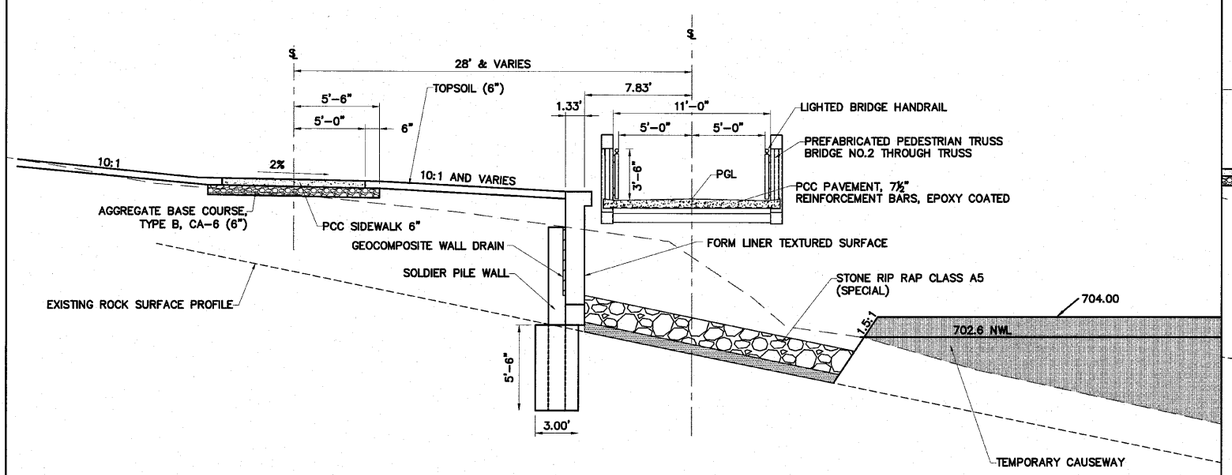

PROPOSED TYPICAL SECTION
STATION 210+90 to 211+87

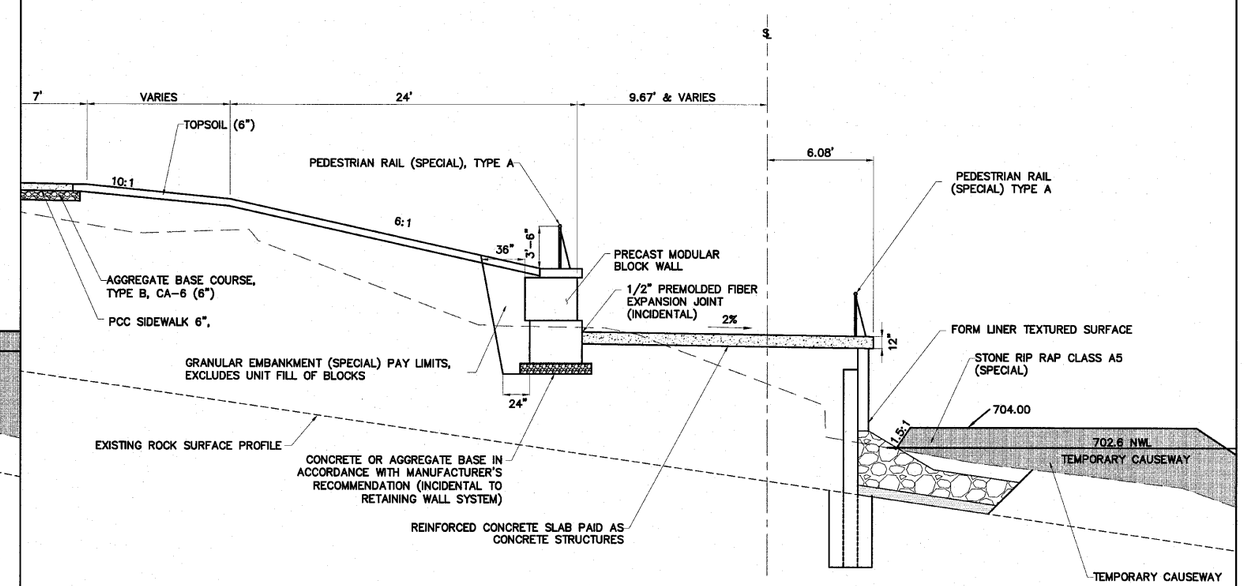

PROPOSED TYPICAL SECTION
STATION 212+36 to 213+17.83

SHEET REVIEW	
AGENCY	DATE

REVISIONS		
NO.	ITEM	DATE

SCALE:	N/A
DRAWN BY:	MS
CHECKED BY:	JWH
DATE:	AUGUST 13, 2010

McClure Engineering Associates, Inc.
7282 Argus Drive Rockford, Illinois 61107-6837
(815) 398-2332 FAX (815) 398-2496
Design Firm License: Illinois 184-000816

TYPICAL SECTION
RIVERWALK MUSEUM CAMPUS
711 NORTH MAIN STREET ROCKFORD, IL
FILE:H:\08-008 RIVERWALK MUSEUM\DESIGN\DRAWINGS\08-008 TYPICAL SECTIONS.DWG JOB:04-28-10-008

F.A. RTE.	SECTION	COUNTY	TOTAL SHEETS	SHEET NO.
	06-00543-00-BT	WINNEBAGO	148	9
FED. ROAD DIST. NO.	ILLINOIS	CONTRACT NO.		85521

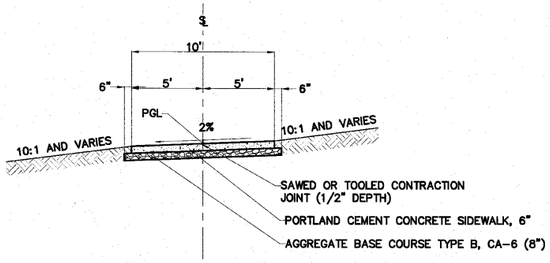

PROPOSED TYPICAL SECTION
STATION 300+00 to 302+27

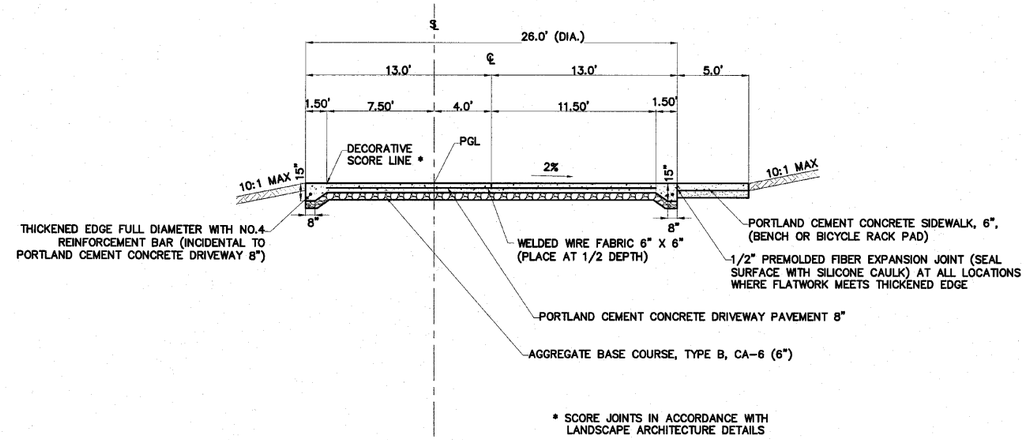

PROPOSED TYPICAL SECTION
STATION 304+04 to 304+30

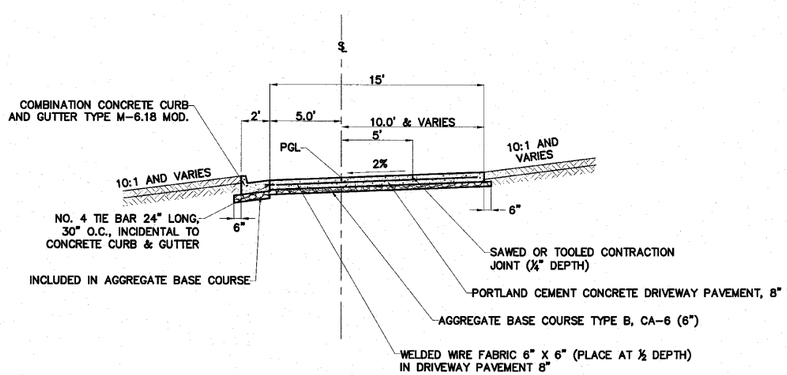

PROPOSED TYPICAL SECTION
STATION 302+27 to 304+04

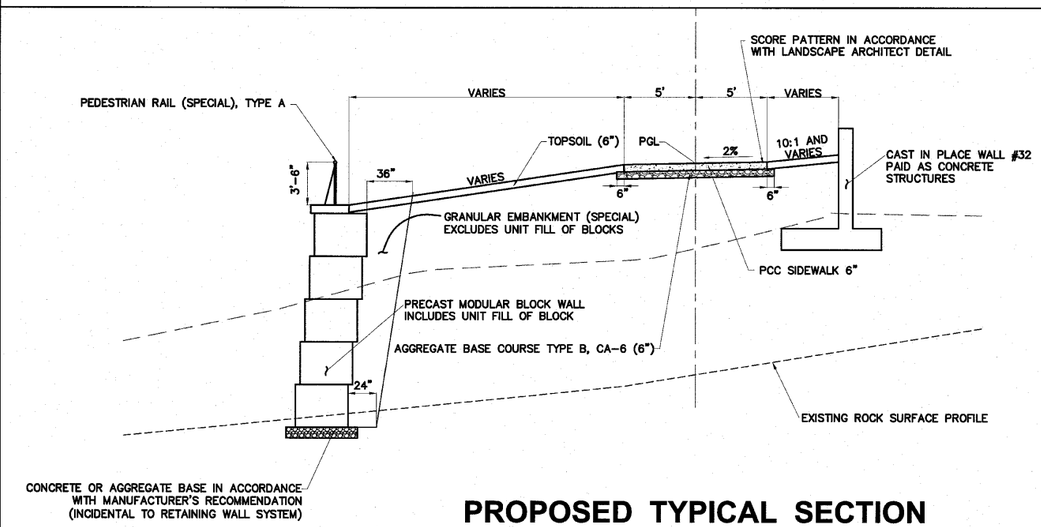

PROPOSED TYPICAL SECTION
STATION 304+30 to 305+10

SHEET REVIEW	
AGENCY	DATE

REVISIONS		
NO.	ITEM	DATE

SCALE:	N/A
DRAWN BY:	MS
CHECKED BY:	JWH
DATE:	AUGUST 13, 2010

McClure Engineering Associates, Inc.
7282 Argus Drive
(815) 398-2332
Rockford, Illinois 61107-5837
FAX (815) 398-2496
Design Firm License: Illinois 184-000816

TYPICAL SECTION
RIVERWALK MUSEUM CAMPUS
711 NORTH MAIN STREET ROCKFORD, IL
FILE:H:\08-008 RIVERWALK MUSEUM\DESIGN\DRAWINGS\08-008 TYPICAL SECTIONS.DWG JOB:04-28-10-008

F.A. RTE.	SECTION	COUNTY	TOTAL SHEETS	SHEET NO.
	06-00543-00-BT	WINNEBAGO	148	10
FED. ROAD DIST. NO.	ILLINOIS	CONTRACT NO.		85521

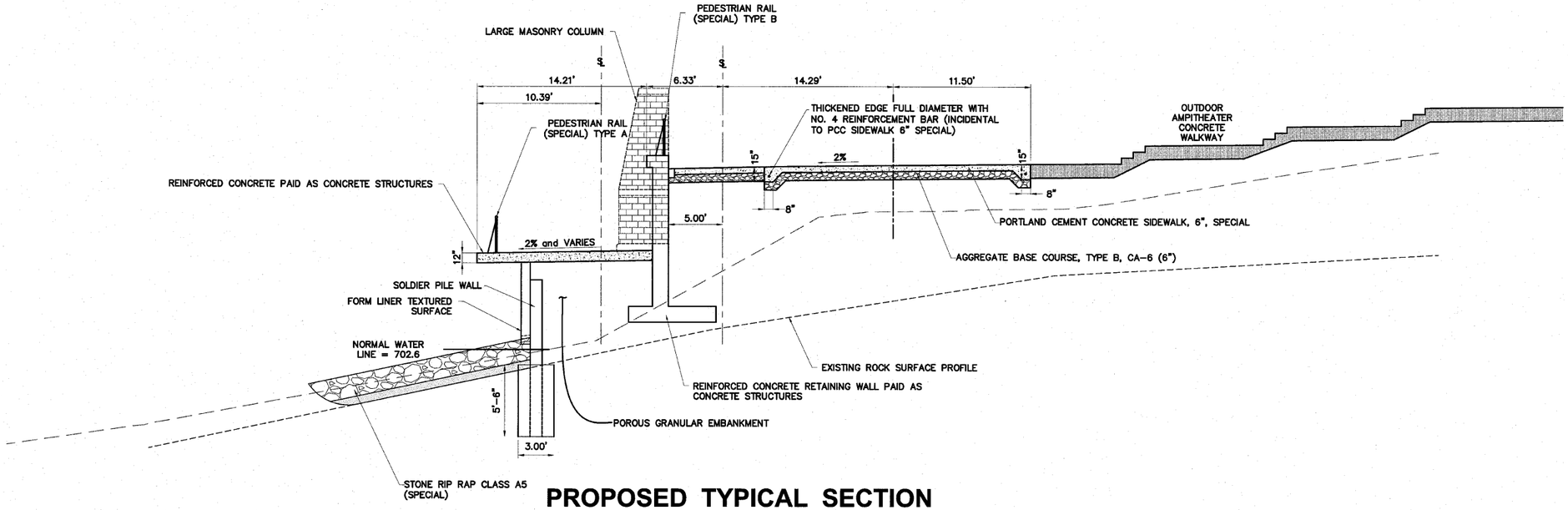

PROPOSED TYPICAL SECTION
STATION 305+10 to 305+60

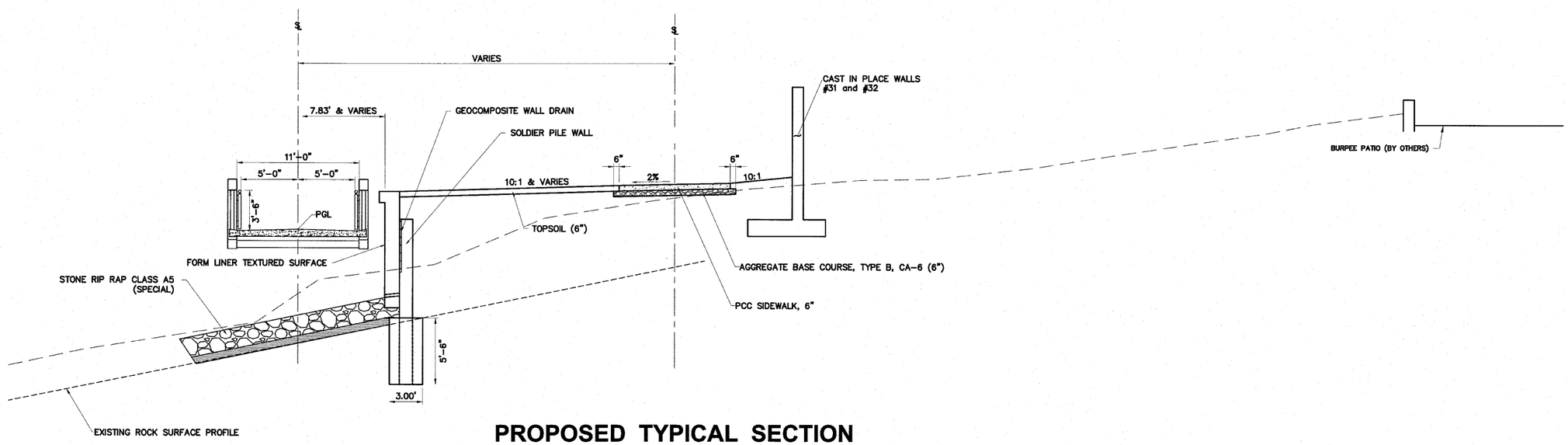

PROPOSED TYPICAL SECTION
STATION 305+60 to 306+76

SHEET REVIEW	
AGENCY	DATE

REVISIONS		
NO.	ITEM	DATE

SCALE:	N/A
DRAWN BY:	MS
CHECKED BY:	JMH
DATE:	AUGUST 13, 2010

McClure Engineering Associates, Inc.
7282 Argus Drive
(815) 398-2332
Rockford, Illinois 61107-5837
FAX (815) 398-2496
Design Firm License: Illinois 184-000816

TYPICAL SECTION
RIVERWALK MUSEUM CAMPUS
711 NORTH MAIN STREET ROCKFORD, IL
FILE:H:\08-008 RIVERWALK MUSEUM\DESIGN\DRAWINGS\08-008 TYPICAL SECTIONS.DWG JOB:04-28-10-008

SHEET NO. 10 OF 148

F.A. RTE.	SECTION	COUNTY	TOTAL SHEETS	SHEET NO.
	06-00543-00-BT	WINNEBAGO	148	11
FED. ROAD DIST. NO.		ILLINOIS	CONTRACT NO.	85521

TREE REMOVAL (6 TO 15 UNITS DIAMETER)

STATION	OFFSET	SIDE	UD
200+11	53	LT	10
200+76	17	LT	4
201+05	17	LT	4
201+98	17	LT	4
202+28	17	LT	4
202+57	17	LT	4
203+18	12	RT	12
203+18	12	RT	12
203+18	12	RT	8
203+19	8	RT	6
203+27	6	RT	30
203+53	17	RT	15
203+54	20	RT	10
203+59	25	RT	10
203+59	30	RT	12
205+30	50	RT	6
205+31	43	RT	6
205+35	42	RT	12
205+38	38	RT	12
205+40	43	RT	14
205+42	42	RT	12
205+45	73	RT	12
205+48	31	RT	12
205+51	77	RT	8
205+55	71	RT	10
205+55	71	RT	10
205+55	71	RT	15
205+59	64	RT	12
205+59	64	RT	12
205+59	64	RT	12
205+59	58	RT	10
205+60	42	RT	10
205+61	44	RT	15
205+61	25	RT	15
205+63	32	RT	10
205+65	39	RT	8
205+65	43	RT	12
205+66	47	RT	12
205+66	51	RT	10
205+68	25	RT	12
205+70	21	RT	12
205+70	29	RT	12
205+70	33	RT	6
205+76	36	RT	6
205+85	21	RT	15
205+88	26	RT	12
205+90	19	RT	12
205+90	34	RT	12
205+92	39	RT	12
205+95	12	RT	6
205+95	16	RT	6
205+96	21	RT	8
205+98	24	RT	8
206+01	8	LT	15
206+01	13	LT	10
206+07	23	LT	12
206+09	8	RT	12
206+09	10	RT	6
206+17	26	RT	12
206+17	23	LT	8
206+23	12	LT	15
206+23	22	RT	10
206+29	18	RT	10
206+29	18	RT	10
206+29	18	RT	10
206+29	18	RT	6
206+30	16	LT	5
206+30	16	LT	6
206+30	16	LT	8
206+30	11	RT	12
206+38	29	LT	12
206+40	8	RT	8
206+40	12	LT	10
206+40	12	LT	12
206+50	15	LT	6
206+50	7	RT	8
206+50	7	RT	6
206+56	10	LT	6

TREE REMOVAL (6 TO 15 UNITS DIAMETER)

STATION	OFFSET	SIDE	UD
206+57	1	LT	10
206+57	17	LT	8
206+60	15	RT	6
206+60	15	RT	6
206+60	40	LT	12
206+61	23	LT	12
206+61	23	LT	15
206+71	9	LT	10
206+71	9	LT	10
206+72	16	LT	8
206+72	16	LT	8
206+74	24	LT	10
206+80	25	LT	10
206+84	8	RT	8
206+84	8	RT	10
206+85	15	RT	6
206+85	6	LT	6
206+91	2	LT	8
206+91	10	LT	10
206+92	17	LT	10
206+96	19	LT	6
206+97	10	RT	8
206+97	10	RT	8
206+97	10	RT	6
207+02	33	LT	12
207+04	7	LT	6
207+05	20	LT	15
207+05	13	LT	15
207+05	8	RT	8
207+08	10	RT	8
207+10	17	LT	8
207+11	12	LT	8
207+12	30	LT	6
207+12	20	RT	12
207+13	25	LT	15
207+13	14	RT	10
207+14	20	RT	12
207+18	7	RT	10
207+18	7	RT	8
207+20	12	RT	12
207+21	1	LT	10
207+21	10	LT	6
207+22	17	LT	8
207+24	20	LT	6
207+28	9	RT	8
207+29	17	LT	6
207+31	8	RT	12
207+34	12	LT	12
207+34	18	LT	6
207+35	21	LT	6
207+35	21	LT	6
207+37	7	RT	8
207+38	19	RT	6
207+40	3	RT	6
207+41	20	RT	15
207+42	9	LT	8
207+42	11	LT	10
207+42	15	LT	12
207+48	2	LT	8
207+48	11	RT	10
207+51	6	LT	10
207+51	11	LT	12
207+51	17	LT	10
207+58	7	LT	8
207+58	6	RT	10
207+59	20	RT	10
207+61	20	RT	8
207+64	11	LT	8
207+64	11	LT	8
207+64	11	LT	10
207+64	20	RT	8
207+67	20	RT	15
207+70	10	LT	10
207+72	7	LT	15
207+76	3	RT	8
207+77	6	RT	6
207+80	4	RT	6
207+82	7	RT	10

TREE REMOVAL (6 TO 15 UNITS DIAMETER)

STATION	OFFSET	SIDE	UD
207+82	7	RT	10
207+83	23	LT	10
207+86	0	RT	6
207+86	9	RT	12
207+87	4	LT	8
207+89	15	RT	6
207+89	9	LT	12
207+91	6	LT	10
207+91	8	LT	12
207+95	15	LT	10
207+96	23	LT	10
207+96	23	LT	10
207+96	23	LT	12
207+96	7	LT	6
207+97	8	LT	10
207+98	15	RT	15
208+01	10	RT	12
208+01	7	LT	8
208+01	9	LT	6
208+02	11	LT	6
208+05	12	LT	8
208+08	0	LT	10
208+08	6	RT	10
208+10	13	RT	10
208+10	13	RT	8
208+10	13	RT	10
208+11	5	RT	8
208+12	12	LT	12
208+12	12	LT	12
208+13	3	LT	6
208+13	3	LT	8
208+20	1	LT	15
208+20	3	RT	6
208+20	3	RT	8
208+20	3	RT	6
208+20	12	RT	6
208+20	12	RT	6
208+22	10	RT	10
208+28	2	RT	10
208+28	9	RT	8
208+32	5	LT	6
208+35	2	LT	6
208+35	2	RT	6
208+35	2	RT	8
208+49	12	LT	12
208+49	18	LT	10
208+51	8	RT	8
208+51	8	RT	12
208+56	3	LT	6
208+56	3	LT	8
208+57	20	LT	10
208+60	20	LT	15
208+60	24	LT	15
208+63	16	LT	15
208+63	22	LT	8
208+65	0	LT	12
208+69	23	LT	10
208+76	8	LT	12
208+76	8	LT	15
208+81	12	LT	8
208+81	12	LT	10
208+90	12	LT	6
209+02	8	RT	15
209+02	8	RT	12
209+05	13	LT	12
209+09	6	LT	6
209+11	14	LT	12
209+13	6	LT	10
209+18	11	LT	12
209+20	10	RT	10
209+20	10	RT	8
209+28	3	LT	15
209+30	4	RT	10
209+30	13	RT	15
209+31	11	RT	15
209+35	5	RT	10
209+37	6	RT	10
209+44	0	LT	8

TREE REMOVAL (6 TO 15 UNITS DIAMETER)

STATION	OFFSET	SIDE	UD
209+50	0	LT	8
209+58	4	LT	6
209+58	11	RT	10
209+58	11	RT	8
209+58	11	RT	8
209+63	4	RT	10
209+63	4	RT	10
209+63	4	RT	12
209+65	10	RT	8
209+65	13	RT	8
209+65	19	RT	15
209+71	2	LT	8
209+71	5	RT	6
209+71	7	RT	10
209+71	14	RT	15
209+74	7	RT	8
209+74	13	RT	6
209+74	18	RT	6
209+75	3	RT	10
209+78	7	LT	8
209+82	7	RT	6
209+87	3	RT	8
209+87	3	RT	8
209+87	3	RT	8
209+87	3	RT	15
209+89	6	LT	6
209+95	6	RT	6
210+00	14	RT	10
210+00	14	RT	8
210+02	1	RT	6
210+02	1	RT	8
210+15	3	RT	10
210+19	8	RT	10
210+24	3	RT	8
210+24	11	RT	8
210+38	3	LT	12
210+38	3	LT	8
210+50	12	LT	6
210+78	7	RT	8
210+90	10	RT	10
210+91	12	RT	6
210+93	12	RT	6
210+95	10	RT	12
211+10	8	RT	12
211+15	8	RT	8
211+35	8	RT	10
211+56	16	LT	15
211+58	4	RT	8
211+60	16	LT	12
211+70	2	RT	8
211+79	3	RT	12
212+05	3	RT	12
212+06	12	LT	15
212+28	10	LT	10
212+40	3	RT	6
212+50	13	LT	6
213+08	3	RT	15
213+18	4	RT	15
213+35	2	RT	10
213+39	2	RT	8
301+23	0	RT	7
302+46	10	LT	8
302+47	10	LT	8
304+36	3	RT	10
		TOTAL	2847

TREE REMOVAL (OVER 15 UNITS DIAMETER)

STATION	OFFSET	SIDE	UD
205+31	57	RT	18
205+38	68	RT	18
205+46	80	RT	36
205+75	30	RT	18
205+88	12	RT	18
206+95	22	LT	20
207+66	24	LT	30
207+82	25	LT	24
208+32	25	LT	20
208+38	22	LT	22
208+71	5	LT	18
209+02	8	RT	24
209+30	13	RT	20
209+40	21	LT	18
209+45	25	LT	18
210+25	3	LT	24
210+25	6	RT	18
210+35	10	RT	18
210+40	7	RT	18
210+92	25	LT	36
212+11	13	LT	18
212+25	5	LT	18
212+78	7	LT	18
212+90	1	RT	18
213+57	3	RT	18
213+57	3	RT	18
		TOTAL	544

TREE TRUNK PROTECTION

STATION	OFFSET	SIDE	EACH
300+22	11	RT	1
300+42	7	LT	1
302+63	31	RT	1
		TOTAL	3

SUB-BASE GRANULAR MATERIAL, TYPE B

	FROM			TO			
LOCATION	STATION	OFFSET	SIDE	STATION	OFFSET	SIDE	TON
ENTRANCE	24+62	3	LT	25+10	3	LT	21
PARKING LOT	200+28	63	LT	209+71	50	LT	1670
PARKING LOT	208+31	29	LT	208+51	71	LT	30
						TOTAL	1721

INLET AND PIPE PROTECTION

STATION	OFFSET	SIDE	TYPE	EACH
PHASE 1				
205+46	20	RT	MH	1
205+49	17	RT	MH	1
205+50	19	RT	INL	1
205+51	14	RT	MH	1
206+49	38	LT	MH	1
207+62	30	LT	MH	1
209+65	25	LT	INL	1
PHASE 2				
205+49	17	RT	MH	1
205+49	6.5	RT	INL	1
205+51	6.5	LT	INL	1
205+60	26	LT	INL	1
206+18	47	LT	INL	1
207+59	27	LT	INL	1
208+50	30	LT	INL	1
209+65	28	LT	INL	1
304+02	7.5	LT	INL	1
304+66	11	LT	MH	1
304+70	21	RT	MH	1
306+33	16	LT	MH	1
			TOTAL	19

TRENCH BACKFILL

FROM			TO					
STATION	#	SIDE	STATION	#	SIDE	LENGTH	CY/LF	CY
EXISTING STRUCTURES								
205+50	PARKING LOT	RT	206+48	PARKING LOT	LT	110	0.305	33.55
206+50	PARKING LOT	LT	207+62	PARKING LOT	LT	101	0.121	12.22
207+62	PARKING LOT	LT	208+50	PARKING LOT	LT	86	2.230	191.78
208+48	HILL	RT	208+48	HILL	RT	41	1.804	73.96
212+07	YARD	LT	212+48	YARD	LT	79	1.864	147.26
212+97	BOATHOUSE	LT	213+08	BOATHOUSE	LT	44	1.019	44.84
PROPOSED STRUCTURES								
205+50	A3	RT	205+50	A4	LT	18	0.383	6.89
205+60	A5	LT	206+18	A6	LT	55	0.257	14.14
206+18	A6	LT	207+59	A7	LT	124	0.173	21.45
208+48	B2	LT	208+50	B3	LT	15	1.224	18.36
209+67	C2	LT	209+65	C3	LT	10	1.362	13.62
211+80	G1	LT	212+01	G2	LT	29		
303+91	F3	LT	303+99	F2	LT	11	0.610	6.71
303+99	F2	LT	304+02	F1	LT	16	0.610	9.76
304+66	E2	LT	304+85	E4	LT	20	1.412	28.24
304+66	E2	RT	304+70	E3	RT	28	1.449	40.57
304+85	E4	LT	305+04	E1	LT	25	0.711	17.78
306+32	D2	RT	306+38	D1	LT	14	0.307	4.30
							TOTAL	685.42

PERIMETER EROSION BARRIER

FROM			TO			
STATION	OFFSET	SIDE	STATION	OFFSET	SIDE	FOOT
202+90	-8	RT	203+60	35	RT	77
205+49	80	RT	206+10	27	RT	97
300+00	6	LT	303+10	14	LT	313
303+46	47	LT	303+80	32	LT	51
					TOTAL	538

SHEET REVIEW	
AGENCY	DATE

REVISIONS		
NO.	ITEM	DATE

SCALE:	N/A
DRAWN BY:	MS
CHECKED BY:	JWH
DATE:	AUGUST 13, 2010

McClure Engineering Associates, Inc.
7282 Argus Drive
(815) 398-2332
Rockford, Illinois 61107-5837
FAX (815) 398-2496
Design Firm License: Illinois 184-000816

SCHEDULE OF QUANTITIES

RIVERWALK MUSEUM CAMPUS

711 NORTH MAIN STREET — ROCKFORD, IL

FILE: H:\08-008 RIVERWALK MUSEUM\DESIGN\DRAWINGS\08-008 SCHEDULE.DWG — JOB: 04-28-10-008

F.A. RTE.	SECTION	COUNTY	TOTAL SHEETS	SHEET NO.
	06-00543-00-BT	WINNEBAGO	148	12
FED. ROAD DIST. NO.		ILLINOIS	CONTRACT NO.	85521

AGGREGATE BASE COURSE, TYPE B

LOCATION	FROM STATION	OFFSET	SIDE	TO STATION	OFFSET	SIDE	TON
ENTRANCE	24+62	3	LT+RT	25+10	3	LT+RT	15.88
PARKING LOT	200+28	63	LT	209+71	50	LT	1252.24
PARKING LOT	208+31	29	LT	208+51	71	LT	22.79
MAIN ST	24+28	3	LT+RT	28+46	3	LT+RT	20.84
MAIN ST	25+11	3	LT+RT	25+22	3	LT+RT	5.43
PATH	200+04	5	LT+RT	200+39	5	LT+RT	15.94
PATH	200+39	7	LT+RT	201+66	7	LT+RT	65.07
PATH	201+66	5	LT+RT	201+74	5	LT+RT	3.42
PATH	201+74	7	LT+RT	202+38	5	LT+RT	31.43
PATH	202+38	5	LT+RT	203+52	5	LT+RT	43.89
PATH TO LOT	202+64	5	LT	202+64	24	LT	6.83
CIRCLE	203+64	-	LT+RT	203+64	-	LT+RT	20.16
BIKE AREA	203+64	-	LT	203+64	-	LT	3.08
PATH	203+76	5	LT+RT	205+61	5	LT+RT	70.69
CIRCLE	205+74	-	LT+RT	205+74	-	LT+RT	20.16
BIKE AREA	205+74	-	LT	205+74	-	LT	3.08
PATH	205+86	5	LT+RT	208+05	5	LT+RT	83.33
OVERLOOK 2	208+18	-	LT+RT	208+18	-	LT+RT	20.16
PARKING LOT	208+29	24	LT	208+31	29	LT	3.49
PARKING LOT	208+42	51	LT	208+51	71	LT	10.74
OVERLOOK 3	210+79	-	LT+RT	210+79	-	LT+RT	20.16
MAIN ST	32+09	-	LT+RT	32+84	-	LT+RT	19.10
PATH	300+00	-	LT+RT	302+27	-	LT+RT	95.93
PATH	302+27	-	LT+RT	304+44	-	LT+RT	18.22
BIKE AREA	304+17	-	RT	304+17	-	RT	3.23
BOATHOUSE	303+84	31	LT	304+10	17	LT	9.15
BOATHOUSE	304+26	17	LT	304+70	5	LT	7.10
PATH	304+44	-	LT+RT	306+77	-	LT+RT	87.50
AMPITHEATER	305+39	14	RT	305+39	14	RT	20.16
						TOTAL	1999

BITUMINOUS MATERIALS (PRIME COAT)

LOCATION	FROM STATION	OFFSET	SIDE	TO STATION	OFFSET	SIDE	TON
ENTRANCE	24+62	3	LT	25+10	3	LT	0.1
PARKING LOT	200+28	63	LT	209+71	50	LT	11.0
PARKING LOT	208+31	29	LT	208+51	71	LT	0.2
						TOTAL	11.3

AGGREGATE (PRIME COAT)

LOCATION	FROM STATION	OFFSET	SIDE	TO STATION	OFFSET	SIDE	TON
ENTRANCE	24+62	3	LT	25+10	3	LT	0.2
PARKING LOT	200+28	63	LT	209+71	50	LT	14.7
PARKING LOT	208+31	29	LT	208+51	71	LT	0.3
						TOTAL	15.2

HOT-MIX ASPHALT BINDER COURSE, IL-19.0, N50

LOCATION	FROM STATION	OFFSET	SIDE	TO STATION	OFFSET	SIDE	TON
ENTRANCE	24+62	3	LT	25+10	3	LT	7
PARKING LOT	200+28	63	LT	209+71	50	LT	527
PARKING LOT	208+31	29	LT	208+51	71	LT	10
						TOTAL	544

HOT-MIX ASPHALT SURFACE COURSE, MIX C, N50

LOCATION	FROM STATION	OFFSET	SIDE	TO STATION	OFFSET	SIDE	TON
ENTRANCE	24+62	3	LT	25+10	3	LT	4
PARKING LOT	200+28	63	LT	209+71	50	LT	316
PARKING LOT	208+31	29	LT	208+51	71	LT	6
						TOTAL	326

PCC PAVEMENT 7 1/2"

LOCATION	STATION	SIDE	STATION	SIDE	SQ YD
CABLE STAYED BRIDGE	208+30	CL	210+66	CL	322
TRUSS BRIDGE	210+92	CL	211+86	CL	129
				TOTAL	451

PCC DRIVEWAY PAVEMENT 8"

LOCATION	FROM STATION	TO STATION	SQ YD
PARKING LOT	208+31	208+51	59
PATH	302+27	304+44	481
		TOTAL	540

PCC SIDEWALK, 6"

LOCATION	FROM STATION	TO STATION	SQ FT
MAIN ST	24+28	24+86	549
MAIN ST	25+11	25+22	143
MAIN ST	32+09	32+89	503
MAIN ST	36+16	36+35	119
MAIN ST	37+69	37+75	62
PATH	200+04	200+39	420
PATH	201+57	201+66	103
TO PARKING LOT	202+59	202+87	276
PATH	202+38	203+52	1156
BIKE AREA	203+64		81
PATH	203+76	205+61	1862
BIKE AREA	205+74		81
PATH	205+86	208+05	2195
PARKING LOT	207+71	208+27	220
OVERLOOK 2	208+18	TOP	73
OVERLOOK 2	208+18	BOTTOM	27
MAIN ST	32+09	32+84	503
PATH	300+00	302+27	2525
PATH	302+94	303+12	76
BIKE AREA	304+17		85
BOATHOUSE	303+84	304+70	588
PATH	304+44	306+77	2303
		TOTAL	13950

PCC SIDEWALK, 6" (SPECIAL)

LOCATION	FROM STATION	TO STATION	SQ FT
THICK EDGE	200+39	201+57	1586
THICK EDGE	201+66	202+38	940
CIRCLE	203+64	-	531
OVERLOOK 1	205+74	-	533
OVERLOOK 2	208+18	-	536
OVERLOOK 3	210+79	-	542
AMPITHEATER	305+39	-	415
		TOTAL	5083

DETECTABLE WARNINGS

LOCATION	FROM STATION	TO OFFSET	SIDE	SQ FT
MAIN ST.	36+24	7.0	RT	6
MAIN ST.			LT	6
MAIN ST.			LT	6
MAIN ST.			LT	6
MAIN ST.			LT	6
MAIN ST.			LT	6
MAIN ST.			RT	6
MAIN ST.	200+00	23.0	LT	12
MAIN ST.	200+00	52.0	LT	12
PARKING LOT	202+64	21.0	LT	12
MAIN ST.	300+00	1.0	RT	12
MAIN ST.	300+00	52.0	LT	12
			TOTAL	102

HOT-MIX ASPHALT SURFACE REMOVAL (SPECIAL)

LOCATION	FROM STATION	OFFSET	SIDE	TO STATION	OFFSET	SIDE	SQ YD
PARKING LOT	301+29	17	RT	304+44	9	RT	795
						TOTAL	795

COMBINATION CURB AND GUTTER REMOVAL

LOCATION	FROM STATION	OFFSET	SIDE	TO STATION	OFFSET	SIDE	FOOT
MAIN ST	36+17	0	RT	36+38	15	RT	26
MAIN ST	36+25	15	LT	36+51	20	LT	23
MAIN ST	36+51	20	LT	36+52	7	RT	23
MAIN ST	36+52	7	RT	36+25	15	LT	30
MAIN ST	37+33	20	LT	37+62	20	LT	27
MAIN ST	37+62	20	LT	37+43	1	RT	26
MAIN ST	37+64	9	RT	37+82	6	LT	24
MAIN ST	37+43	1	RT	37+62	20	LT	21
ENTRANCE	199+96	3	RT	200+06	7	LT	20
ENTRANCE	199+96	55	LT	200+06	43	LT	19
PARKING LOT	200+27	63	LT	203+26	31	LT	340
PARKING LOT	203+41	10	LT	203+75	49	RT	70
PARKING LOT	205+53	17	RT	209+63	28	LT	407
BOAT HOUSE	303+81	13	LT	304+02	13	LT	62
						TOTAL	1118

SIDEWALK REMOVAL

LOCATION	STATION	OFFSET	SIDE	STATION	OFFSET	SIDE	SQ FT
MAIN STREET	36+17	4	RT	36+38	18	RT	119
MAIN STREET	37+69	15	RT	37+75	7	RT	62
MAIN STREET	199+96	33	RT	200+04	63	LT	547
MAIN STREET	199+96	33	RT	200+04	63	LT	547
ARMORY	201+38	10	RT	201+68	10	RT	153
MAIN STREET	299+96	73	RT	301+00	4	LT	403
BOATHOUSE	303+80	17	LT	305+53	20	RT	2345
STAIRS	304+08	30	LT	304+08	47	LT	70
						TOTAL	4246

CONCRETE MEDIAN SURFACE REMOVAL

LOCATION	STATION	SIDE	STATION	SIDE	SQ FT
MAIN STREET	36+92	LT	36+95	LT	26
MAIN STREET	36+28	LT	36+52	LT	245
MAIN STREET	37+36	LT	37+61	LT	269
				TOTAL	540

SAW CUTS

LOCATION	FROM STATION	OFFSET	SIDE	TO STATION	OFFSET	SIDE	FOOT
MAIN ST	24+28	0.4	RT	24+28	8	RT	8
MAIN ST	24+53	7	LT	24+55	7	LT	2
MAIN ST	25+13	7	LT	25+15	7	LT	2
MAIN ST	25+23	2	RT	25+23	6	RT	5
MAIN ST	36+15	1	RT	36+15	6	RT	5
MAIN ST	36+25	S. ISLAND	LT	36+52	S. ISLAND	RT	96
MAIN ST	36+33	19	RT	36+37	13	RT	5
MAIN ST	36+94	10	LT	36+94	19	LT	23
MAIN ST	37+33	N. ISLAND	LT	37+64	N. ISLAND	RT	90
MAIN ST	200+08	12	RT	200+08	5	RT	7
PARKING LOT	200+05	63	LT	200+07	63	LT	2
PARKING LOT	200+28	63	LT	200+57	63	LT	29
PARKING LOT	200+57	63	LT	200+57	30	LT	33
PARKING LOT	200+57	30	LT	202+30	30	LT	173
ARMORY	201+37	5	RT	201+37	10	RT	5
ARMORY	201+68	5	RT	201+68	5	RT	5
PARKING LOT	202+30	30	LT	202+30	35	LT	5
PARKING LOT	202+30	35	LT	203+13	37	LT	90
PARKING LOT	203+13	37	LT	203+13	32	LT	5
PARKING LOT	203+13	32	LT	205+46	46	LT	167
PARKING LOT	205+46	46	LT	207+64	48	LT	170
PARKING LOT	207+64	48	LT	209+71	50	LT	206
PARKING LOT	208+46	52	LT	208+46	76	LT	27
PARKING LOT	208+46	76	LT	208+56	66	LT	14
PARKING LOT	208+56	66	LT	208+56	51	LT	17
MAIN ST	32+07	0.4	RT	32+12	6	LT	7
PARKING LOT	301+29	17	RT	301+40	21	RT	11
PARKING LOT	302+45	46	RT	302+58	45	RT	13
PARKING LOT	302+71	58	RT	302+72	78	RT	20
PARKING LOT	304+33	24	LT	304+44	9	LT	20
						TOTAL	1262

CONCRETE RETAINING WALL REMOVAL

STATION	OFFSET	SIDE	STATION	OFFSET	SIDE	FOOT
201+37	6	RT	201+48	5	RT	11
201+58	5	RT	201+68	6	RT	11
202+94	6	RT	203+41	9	LT	49
					TOTAL	71

PIPE CULVERT REMOVAL (SPECIAL)

LOCATION	FROM STATION	TO STATION	FOOT
HILL	205+50	205+76	49
PARKING LOT	205+50	206+48	99
PARKING LOT	206+48	207+62	101
PARKING LOT	207+62	208+50	86
HILL	208+48	208+48	41
PARKING LOT	208+50	208+60	10
HILL	209+65	209+65	41
YARD	211+14	211+14	2
YARD	212+07	212+48	79
BOATHOUSE	212+97	213+08	44
		TOTAL	552

PRECAST REINFORCED CONCRETE FLARED END SECTION, 24"

STATION	OFFSET	SIDE	EACH
205+65	40	RT	1
		TOTAL	1

SHEET REVIEW	
AGENCY	DATE

REVISIONS		
NO.	ITEM	DATE

SCALE: N/A
DRAWN BY: MS
CHECKED BY: JWH
DATE: AUGUST 13, 2010

McClure Engineering Associates, Inc.
7282 Argus Drive Rockford, Illinois 61107-5837
(815) 398-2332 FAX (815) 398-2496
Design Firm License: Illinois 184-000816

SCHEDULE OF QUANTITIES

RIVERWALK MUSEUM CAMPUS

711 NORTH MAIN STREET ROCKFORD, IL

FILE:H:\08-008 RIVERWALK MUSEUM\DESIGN\DRAWINGS\08-008 SCHEDULE.DWG JOB:04-28-10-008

F.A. RTE.	SECTION	COUNTY	TOTAL SHEETS	SHEET NO.
	06-00543-00-BT	WINNEBAGO	148	13
FED. ROAD DIST. NO.		ILLINOIS	CONTRACT NO.	85521

STORM SEWERS, CLASS A, TYPE 1, 12"

FROM			TO			
STATION	#	SIDE	STATION	#	SIDE	FOOT
205+60	A5	LT	206+18	A6	LT	46
206+18	A6	LT	207+59	A7	LT	118
					TOTAL	164

STORM SEWER, CLASS A, TYPE 1, 15"

FROM			TO			
STATION	#	SIDE	STATION	#	SIDE	FOOT
208+48	B1	LT	208+48	B2	LT	2
208+48	B2	LT	208+50	B3	LT	15
208+50	B1	LT	208+50	B2	LT	4
209+65	C3	LT	209+67	C2	LT	10
209+67	C2	LT	209+67	C1	LT	2
304+02	F1	LT	304+66	E2	LT	51
					TOTAL	84

STORM SEWER, CLASS A, TYPE 1, 18"

FROM			TO			
STATION	#	SIDE	STATION	#	SIDE	FOOT
304+66	E2	LT	304+70	E3	RT	28
304+66	E2	LT	212+71	E4	LT	16
212+71	E4	LT	212+72	E1	LT	27
211+21	D1	LT	306+31	D2	RT	63
					TOTAL	134

STORM SEWER, CLASS A, TYPE 1, 24"

FROM			TO			
STATION	#	SIDE	STATION	#	SIDE	FOOT
205+65	A1	RT	205+49	A2	RT	22
205+49	A2	RT	205+50	A3	RT	10
205+50	A3	RT	205+50	A4	LT	12
205+50	A4	LT	205+60	A5	LT	18
					TOTAL	62

STORM SEWERS, CLASS B, TYPE 1, 6"

FROM			TO			
STATION	OFFSET	SIDE	STATION	OFFSET	SIDE	FOOT
303+91	28	LT	303+98	25	LT	11
303+99	24	LT	304+02	12	LT	13
305+54	19	RT	305+65	9	LT	29
305+58	6	LT	305+65	6	LT	8
					TOTAL	61

MANHOLES, TYPE A, 4'-DIAMETER, TYPE 1 FRAME, CLOSED LID

STATION	#	SIDE	EACH
205+49	A2	RT	1
304+66	E2	LT	1
304+85	E4	LT	1
306+32	D2	RT	1
		TOTAL	4

INLETS, TYPE A, TYPE 8 GRATE

STATION	#	SIDE	EACH
303+99	F2	LT	1
		TOTAL	1

INLETS, SPECIAL, No.1

STATION	#	SIDE	EACH
205+50	A3	RT	1
205+50	A4	LT	1
206+18	A6	LT	1
207+59	A7	LT	1
		TOTAL	4

INLET SPECIAL No. 2

STATION	#	SIDE	EACH
205+60	A5	LT	1
209+65	C3	LT	1
304+02	F1	LT	1
		TOTAL	3

INLET BOX, SPECIAL, No.1

STATION	#	SIDE	EACH
208+48	B2	LT	1
209+67	C2	RT	1
		TOTAL	2

MANHOLES TO BE RECONSTRUCTED WITH NEW TYPE 1 FRAME, OPEN LID

STATION	#	SIDE	EACH
208+50	B3	LT	1
		TOTAL	1

SANITARY MANHOLES TO BE RECONSTRUCTED

STATION	OFFSET	SIDE	#	EACH
206+05	23	RT	034-108	1
208+03	22	LT	034-109	1
209+00	25	LT	034-133	1
211+47	21	LT	034-134	1
			TOTAL	4

INLETS TO BE ADJUSTED

STATION	OFFSET	SIDE	EACH
36+29	15	LT	1
36+31	8	RT	1
36+93	21	LT	1
37+40	4	LT	1
37+56	20	LT	1
37+71	3	RT	1
		TOTAL	6

REMOVE INLETS

STATION	OFFSET	SIDE	EACH
205+46	20	RT	1
205+49	17	RT	1
205+50	19	RT	1
205+51	14	RT	1
206+49	38	LT	1
207+62	30	LT	1
209+65	25	LT	1
303+88	28	LT	1
304+02	18	LT	1
304+21	25	LT	1
		TOTAL	10

CONCRETE GUTTER, TYPE B

LOCATION	FROM STATION	FROM OFFSET	TO STATION	TO OFFSET	SIDE	FOOT
PATH	208+30	10	209+96	11	LT	167
					TOTAL	167

COMBINATION CURB AND GUTTER TYPE M-6.18 (MOD)

LOCATION	FROM STATION	FROM OFFSET	TO STATION	TO OFFSET	SIDE	FOOT
MAIN ST	36+17	0	36+38	15	RT	26
MAIN ST	36+25	15	36+51	20	LT	23
MAIN ST	36+51	20	36+52	7	LT + RT	23
MAIN ST	36+52	7	36+25	15	RT + LT	30
MAIN ST	37+33	20	37+62	20	LT	27
MAIN ST	37+62	20	37+43	1	LT + RT	26
MAIN ST	37+64	9	37+82	6	RT + LT	24
MAIN ST	37+43	1	37+33	20	RT + LT	21
PARKING LOT	200+04	51	200+27	63	LT	30
PARKING LOT	200+04	24	200+40	7	LT	51
PATH	201+66	7	201+75	7	LT	38
PATH	202+38	7	209+68	28	LT	747
PATH	302+61	7	304+08	7	LT	156
					TOTAL	1222

CONCRETE MEDIAN SURFACE, 6 INCH

LOCATION	STATION	SIDE	STATION	SIDE	SQ FT
MAIN STREET	36+92	LT	36+95	LT	26
MAIN STREET	36+28	LT	36+52	LT	245
MAIN STREET	37+36	LT	37+61	LT	269
				TOTAL	540

STEEL PLATE BEAM GUARD RAIL (SPECIAL)

FROM			TO			
STATION	OFFSET	SIDE	STATION	OFFSET	SIDE	FOOT
206+19	45	LT	207+64	24	LT	126
208+42	28	LT	209+61	26	LT	120
					TOTAL	246

THERMOPLASTIC MARKING LINE - 6"

LOCATION	FROM STATION	TO STATION	SIDE	FOOT
MAIN-WHITMAN	36+52	37+37	LT	86
MAIN-WHITMAN	36+52	37+37	LT	86
			TOTAL	172

THERMOPLASTIC MARKING LINE - 24"

LOCATION	FROM STATION	TO STATION	SIDE	FOOT
MAIN-WHITMAN	36+97	37+41	RT	44
			TOTAL	44

PAINT PAVEMENT MARKING LINE - 4"

LOCATION	FROM STATION	TO STATION	SIDE	FOOT
PARKING LOT	200+49	201+48	LT	216
PARKING LOT	201+75	202+29	LT	126
PARKING LOT	203+10	203+84	LT	180
PARKING LOT	204+26	205+07	LT	126
PARKING LOT	206+65	207+58	LT	342
PARKING LOT	209+15	209+76	LT	736
			TOTAL	1726

HANDHOLE TO BE ADJUSTED

STATION	OFFSET	SIDE	EACH
36+44	13	LT	1
36+93	14	LT	1
37+40	11	LT	1
		TOTAL	3

TRENCH DRAIN

FROM			TO			
STATION	OFFSET	SIDE	STATION	OFFSET	SIDE	FOOT
303+85	29	LT	303+91	28	LT	10
305+23	19	RT	305+54	19	RT	20
305+13	6	LT	305+59	6	LT	50
					TOTAL	80

REMOVAL OF EXISTING LIGHTING UNIT, SALVAGE

STATION	OFFSET	SIDE	EACH
203+91	15	LT	1
205+40	50	LT	1
205+09	36	RT	1
301+30	2	RT	1
303+63	31	RT	1
		TOTAL	5

REMOVAL OF POLE FOUNDATION

STATION	OFFSET	SIDE	EACH
203+91	15	LT	1
205+40	50	LT	1
205+09	36	RT	1
301+30	2	RT	1
303+63	31	RT	1
		TOTAL	5

SANITARY MANHOLES TO BE ADJUSTED

STATION	OFFSET	SIDE	#	EACH
303+78	19	LT	034-135	1
			TOTAL	1

BUILDING REMOVAL No. 1

STATION	OFFSET	SIDE	EACH
302+77	22	RT	1
		TOTAL	1

BUILDING REMOVAL No. 2

STATION	OFFSET	SIDE	EACH
305+80	19	RT	1
		TOTAL	1

SEEPAGE COLLARS

STATION	#	SIDE	EACH
208+49	B1	LT	1
209+64	C1	LT	1
211+21	D1	LT	1
211+80	G1	LT	1
212+72	E1	RT	1
		TOTAL	5

SHEET REVIEW

AGENCY	DATE

REVISIONS

NO.	ITEM	DATE

SCALE:	N/A
DRAWN BY:	MS
CHECKED BY:	JWH
DATE:	AUGUST 13, 2010

McClure Engineering Associates, Inc.
7282 Argus Drive Rockford, Illinois 61107-5837
(815) 398-2332 FAX (815) 398-2496
Design Firm License: Illinois 184-000816

SCHEDULE OF QUANTITIES

RIVERWALK MUSEUM CAMPUS

711 NORTH MAIN STREET ROCKFORD, IL

FILE: H:\08-008 RIVERWALK MUSEUM\DESIGN\DRAWINGS\08-008 SCHEDULE.DWG JOB: 04-28-10-008

F.A. RTE.	SECTION	COUNTY	TOTAL SHEETS	SHEET NO.
	06-00543-00-BT	WINNEBAGO	148	14
FED. ROAD DIST. NO.	ILLINOIS	CONTRACT NO.		85521

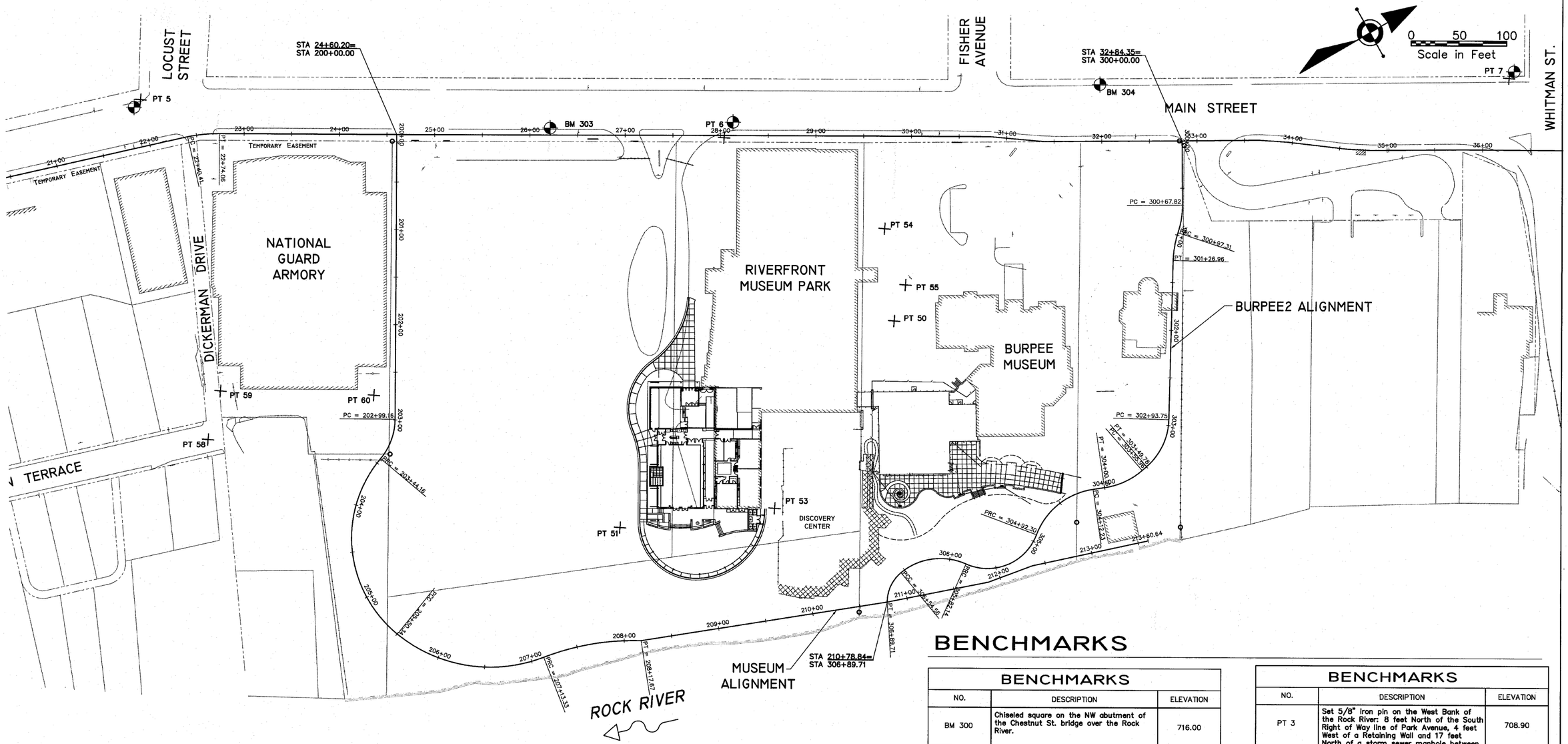

NOTES

1. COORDINATES ARE BASED ON WINGIS MONUMENT DE 7358 (WIN 07.9N 03.6E) AND ARE EXPRESSED IN U.S. SURVEY FEET, ILLINOIS WEST ZONE STATE PLANE COORDINATES.

LEGEND

○ EXISTING PROPERTY CORNERS TO BE PROTECTED (SEE GENERAL NOTES)

⊕ EXISTING BENCHMARK (ELEVATIONS ARE BASED ON NAVD 88 TAKEN FROM NGS VERTICAL CONTROL M222 AT THE GREEN STREET POST OFFICE.)

POINT TABLE

PT NO.	NORTHING	EASTING	ELEV.	DESCRIPTION
3	2043975.0913	2587774.7922	708.90	Set 5/8"
4	2044265.9277	2587361.3868	722.69	Cut "X"
5	2044906.9166	2587647.3317	729.73	Set 5/8"
6	2045344.2473	2588077.8916	734.59	Cut "X"
7	2046007.9360	2588568.9947	726.90	Cut "X"
8	2044541.5452	2589006.1054	711.21	Set Mag Nail
50	2045353.2320	2588340.0472	0.00	Set Spk
51	2044993.7397	2588316.3650	730.47	MAG NAIL
52	2044167.6496	2587533.1930	0.00	Cut "X"
53	2045129.6375	2588407.1279	731.40	MAG NAIL
54	2045408.7853	2588260.3744	0.00	Set 5/8"
55	2045386.8667	2588319.1931	0.00	Set 5/8"
56	2044522.7361	2587507.5706	0.00	Set Cut "X"
57	2044396.8349	2587788.1872	0.00	Set Mag Nail
58	2044727.1296	2587963.7933	0.00	Set Mag Nail
59	2044770.2438	2587933.7226	0.00	Set Mag Nail
60	2044889.2452	2588042.2388	0.00	Set Spike

BENCHMARKS

BENCHMARKS

NO.	DESCRIPTION	ELEVATION
BM 300	Chiseled square on the NW abutment of the Chestnut St. bridge over the Rock River.	716.00
BM 301	North Bonnet Bolt on Fire Hydrant at Southwest Corner of Wyman St. and Park Ave.	721.78
BM 302	Arrow Bonnet Bolt on top flange of Fire Hydrant south of First Presbyterian Church Entrance.	727.98
BM 303	North Bonnet Bolt on top flange of Fire Hydrant South of Museum Entrance in East ROW of Main St. STA 26+26 2' Lt.	736.60
BM 304	NE Bonnet Bolt on top flange of Fire Hydrant North of Fisher Ave. on West side of N. Main St. across from North Entrance to Burpee Museum 31+97, 61'Lt.	732.70
BM 305	Set Aluminum MEAI Disk in West End Northwest Wingwall of Whitman St. Bridge over the Rock River STA 37+75 290' Rt.	727.32

BENCHMARKS

NO.	DESCRIPTION	ELEVATION
PT 3	Set 5/8" iron pin on the West Bank of the Rock River: 8 feet North of the South Right of Way line of Park Avenue, 4 feet West of a Retaining Wall and 17 feet North of a storm sewer manhole between the sidewalk and the River.	708.90
PT 5	Top of 5/8" iron pin on the SW corner of N. Main Street and Locust Street: 2 feet behind the back of curb, 9 feet Southeast of a Fire Hydrant, and 2 feet North of the South Right of Way of Locust Street between the sidewalk and the curb, STA 22+01, 49'Lt.	729.74
PT 6	Cut "x" in concrete sidewalk on the N. side of the Rockford Museum Park entrance: 5.5 feet behind the back of curb, 17 feet SW of the corner of Museum building, 7.5 feet West of a storm sewer manhole in the west edgeo ofsidewalk along Main St.	734.60
PT 7	Cut "X" in concrete sidewalk in the SW corner of Whitman St. and N. Main St.: 3.5 feet West of the back of curb, 16 feet South of the South Right of Way line of Whitman Street, 20 feet South of a Traffic Signal and 1 foot East of the West Edge of the sidewalk, STA: 36+27, 76' Lt.	726.91

SHEET REVIEW	
AGENCY	DATE

REVISIONS		
NO.	ITEM	DATE

SCALE:	N/A
DRAWN BY:	MS
CHECKED BY:	JWH
DATE:	AUGUST 13, 2010

McClure Engineering Associates, Inc.
7282 Argus Drive Rockford, Illinois 61107-5837
(815) 398-2332 FAX (815) 398-2496
Design Firm License: Illinois 184-000816

HORIZONTAL & VERTICAL CONTROL

RIVERWALK MUSEUM CAMPUS

711 NORTH MAIN STREET ROCKFORD, IL

FILE: H:\08-008 RIVERWALK MUSEUM\DESIGN\DRAWINGS\08-008 OVERALL HORIZ-VERTICAL.DWG JOB: 04-28-10-008

F.A. RTE.	SECTION	COUNTY	TOTAL SHEETS	SHEET NO.
	06-00543-00-BT	WINNEBAGO	148	15
FED. ROAD DIST. NO.	ILLINOIS	CONTRACT NO.		85521

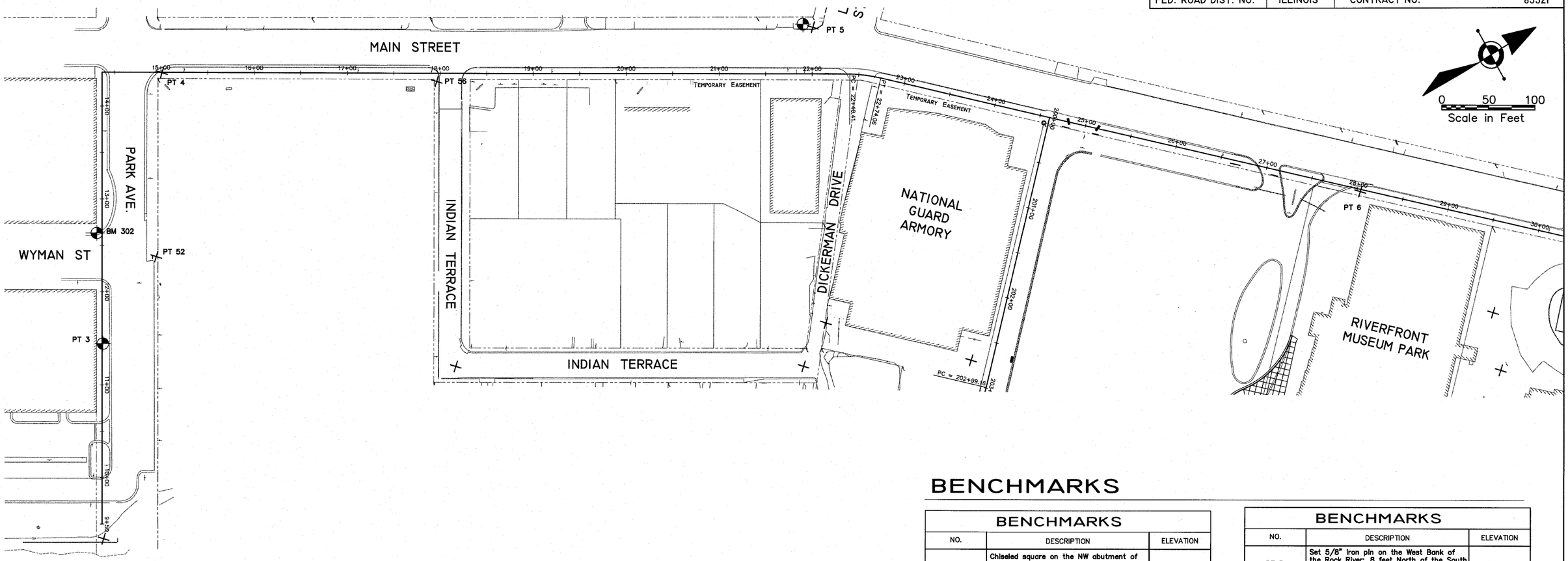

NOTES

1. COORDINATES ARE BASED ON WINGIS MONUMENT DE 7358 (WIN 07.9N 03.6E).

LEGEND

○ EXISTING PROPERTY CORNERS TO BE PROTECTED (SEE GENERAL NOTES)

⊕ EXISTING BENCHMARK

POINT TABLE

PT NO.	NORTHING	EASTING	ELEV.	STATION	OFFSET	DESCRIPTION
3	2043975.0913	2587774.7922	708.90			Set 5/8"
4	2044265.9277	2587361.3868	722.69			Cut "X"
5	2044906.9166	2587647.3317	729.73			Set 5/8"
6	2045344.2473	2588077.8916	734.59			Cut "X"
7	2046007.9360	2588568.9947	726.90			Cut "X"
50	2045353.2320	2588340.0472				Set Spk
51	2044993.7397	2588316.3650	730.47			MAG NAIL
52	2044167.6496	2587533.1930				Cut "X"
53	2045129.6375	2588407.1279	731.40			MAG NAIL
54	2045408.7853	2588260.3744				Set 5/8"
55	2045386.8667	2588319.1931				Set 5/8"
56	2044522.7361	2587507.5706				Set Cut "X"
57	2044396.8349	2587788.1872				Set Mag Nail
58	2044727.1296	2587963.7933				Set Mag Nail
59	2044770.2438	2587933.7226				Set Mag Nail
60	2044889.2452	2588042.2388				Set Spike

BENCHMARKS

BENCHMARKS

NO.	DESCRIPTION	ELEVATION
BM 300	Chiseled square on the NW abutment of the Chestnut St. bridge over the Rock River.	716.00
BM 301	North Bonnet Bolt on Fire Hydrant at Southwest Corner of Wyman St. and Park Ave.	721.78
BM 302	Arrow Bonnet Bolt on top flange of Fire Hydrant south of First Presbyterian Church Entrance.	727.98
BM 303	North Bonnet Bolt on top flange of Fire Hydrant South of Museum Entrance in East ROW of Main St. STA 26+26 2' Lt.	736.60
BM 304	NE Bonnet Bolt on top flange of Fire Hydrant North of Fisher Ave. on West side of N. Main St. across from North Entrance to Burpee Museum 31+97, 61'Lt.	732.70
BM 305	Set Aluminum MEAI Disk in West End Northwest Wingwall of Whitman St. Bridge over the Rock River STA 37+75 290' Rt.	727.32

BENCHMARKS

NO.	DESCRIPTION	ELEVATION
PT 3	Set 5/8" iron pin on the West Bank of the Rock River: 8 feet North of the South Right of Way line of Park Avenue, 4 feet West of a Retaining Wall and 17 feet North of a storm sewer manhole between the sidewalk and the River.	708.90
PT 5	Top of 5/8" iron pin on the SW corner of N. Main Street and Locust Street: 2 feet behind the back of curb, 9 feet Southeast of a Fire Hydrant, and 2 feet North of the South Right of Way of Locust Street between the sidewalk and the curb, STA 22+01, 49'Lt.	729.74
PT 6	Cut "x" in concrete sidewalk on the N. side of the Rockford Museum Park entrance: 5.5 feet behind the back of curb, 17 feet SW of the corner of Museum building, 7.5 feet West of a storm sewer manhole in the west edgeo ofsidewalk along Main St.	734.60
PT 7	Cut "X" in concrete sidewalk in the SW corner of Whitman St. and N. Main St.: 3.5 feet West of the back of curb, 16 feet South of the South Right of Way line of Whitman Street, 20 feet South of a Traffic Signal and 1 foot East of the West Edge of the sidewalk, STA: 36+27, 76' Lt.	726.91

SHEET REVIEW	
AGENCY	DATE

REVISIONS		
NO.	ITEM	DATE

SCALE:	N/A
DRAWN BY:	MS
CHECKED BY:	JMH
DATE:	AUGUST 13, 2010

McClure Engineering Associates, Inc.
7282 Argus Drive
(815) 398-2332
Rockford, Illinois 61107-5837
FAX (815) 398-2496
Design Firm License: Illinois 184-000816

HORIZONTAL & VERTICAL CONTROL

RIVERWALK MUSEUM CAMPUS

711 NORTH MAIN STREET — ROCKFORD, IL

FILE: H:\08-008 RIVERWALK MUSEUM\DESIGN\DRAWINGS\08-008 OVERALL HORIZ-VERTICAL.DWG — JOB: 04-28-10-008

SHEET NO. 15 OF 148

F.A. RTE.	SECTION	COUNTY	TOTAL SHEETS	SHEET NO.
	06-00543-00-BT	WINNEBAGO	148	16
FED. ROAD DIST. NO.	ILLINOIS	CONTRACT NO.		85521

Alignment: Burpee 2

Desc: Burpee Museum and along Rock River

Desc.	Station	Spiral/Curve Data	Northing	Easting
PI	300+00		2045705.4950	2588394.4798
	Length:	82.70 Course: S 49-25-32 E		
PI	300+82.70		2045651.7034	2588457.2963
	Length:	29.81 Course: S 30-39-15 E		
	Delta:	18-46-17		
		Tangent Data		
	300+00		2045705.4950	2588394.4798
	300+67.82		2045661.3796	2588445.9968
	Length:	67.82 Course: S 49-25-32 E		
		Circular Curve Data		
PC	300+67.82		2045661.3796	2588445.9968
CC			2045593.0190	2588387.4576
PT	300+97.31		2045638.9059	2588464.8811
	Delta:	18-46-17 Type: RIGHT		
	Radius:	90.00 DOC: 63-39-43		
	Length:	29.49 Tangent: 14.88		
	Mid-Ord:	1.20 External: 1.22		
	Chord:	29.35 Course: S 40-02-23 E		
	Es:	1.22		
PI	301+12.25		2045626.0576	2588472.4959
	Length:	211.47 Course: S 47-38-35 E		
	Delta:	16-59-20		
		Circular Curve Data		
PC	300+97.31		2045638.9059	2588464.8811
CC			2045689.8913	2588550.9072
PT	301+26.96		2045615.9950	2588483.5326
	Delta:	16-59-20 Type: LEFT		
	Radius:	100.00 DOC: 57-17-45		
	Length:	29.65 Tangent: 14.94		
	Mid-Ord:	1.10 External: 1.11		
	Chord:	29.54 Course: S 39-08-55 E		
	Es:	1.11		
PI	303+23.49		2045483.5833	2588628.7613
	Length:	58.64 Course: S 00-05-05 E		
	Delta:	47-33-30		
		Tangent Data		
	301+26.96		2045615.9950	2588483.5326
	302+93.75		2045503.6217	2588606.7832
	Length:	166.79 Course: S 47-38-35 E		
		Circular Curve Data		
PC	302+93.75		2045503.6217	2588606.7832
CC			2045453.7417	2588561.3053
PT	303+49.78		2045453.8416	2588628.8053
	Delta:	47-33-30 Type: RIGHT		
	Radius:	67.50 DOC: 84-52-57		
	Length:	56.03 Tangent: 29.74		
	Mid-Ord:	5.73 External: 6.26		
	Chord:	54.43 Course: S 23-51-50 E		
	Es:	6.26		
PI	303+78.68		2045424.9414	2588628.8480
	Length:	79.12 Course: S 32-35-30 W		
	Delta:	32-40-35		
		Tangent Data		
	303+49.78		2045453.8416	2588628.8053
	303+55.96		2045447.6601	2588628.8144
	Length:	6.18 Course: S 00-05-05 E		
		Circular Curve Data		
PC	303+55.96		2045447.6601	2588628.8144
CC			2045447.5455	2588551.3145
PT	304+00.16		2045405.8002	2588616.6106
	Delta:	32-40-35 Type: RIGHT		
	Radius:	77.50 DOC: 73-55-48		
	Length:	44.20 Tangent: 22.72		
	Mid-Ord:	3.13 External: 3.26		
	Chord:	43.60 Course: S 16-15-12 W		
	Es:	3.26		
PI	304+56.56		2045358.2797	2588586.2297
	Length:	102.89 Course: S 28-34-41 E		
	Delta:	61-10-11		
		Tangent Data		
	304+00.16		2045405.8002	2588616.6106
	304+12.23		2045395.6276	2588610.1070
	Length:	12.07 Course: S 32-35-30 W		
		Circular Curve Data		
PC	304+12.23		2045395.6276	2588610.1070
CC			2045355.2289	2588673.2968
PT	304+92.30		2045319.3522	2588607.4343
	Delta:	61-10-11 Type: LEFT		
	Radius:	75.00 DOC: 76-23-40		
	Length:	80.07 Tangent: 44.33		
	Mid-Ord:	10.43 External: 12.12		
	Chord:	76.32 Course: S 02-00-24 W		
	Es:	12.12		
PI	305+50.86		2045267.9279	2588635.4463
	Length:	99.04 Course: S 65-00-42 W		
	Delta:	93-35-24		
		Circular Curve Data		
PC	304+92.30		2045319.3522	2588607.4343
CC			2045293.0426	2588559.1352
PT	305+82.14		2045243.1909	2588582.3690
	Delta:	93-35-24 Type: RIGHT		
	Radius:	55.00 DOC: 104-10-27		
	Length:	89.84 Tangent: 58.56		
	Mid-Ord:	17.35 External: 25.34		
	Chord:	80.18 Course: S 18-13-01 W		
	Es:	25.34		
PI	306+22.63		2045226.0887	2588545.6736
	Length:	59.29 Course: S 01-10-43 W		
	Delta:	63-49-59		
		Circular Curve Data		
PC	305+82.14		2045243.1909	2588582.3690
CC			2045184.2752	2588609.8270
PT	306+54.56		2045185.6124	2588544.8408
	Delta:	63-49-59 Type: LEFT		
	Radius:	65.00 DOC: 88-08-50		
	Length:	72.42 Tangent: 40.48		
	Mid-Ord:	9.83 External: 11.58		
	Chord:	68.73 Course: S 33-05-43 W		
	Es:	11.58		
PI	306+73.36		2045166.8153	2588544.4540
	Length:	18.80 Course: S 49-10-14 E		
	Delta:	50-20-58		
		Circular Curve Data		
PC	306+54.56		2045185.6124	2588544.8408
CC			2045184.7895	2588584.8323
PT	306+89.71		2045154.5231	2588558.6800
	Delta:	50-20-58 Type: LEFT		
	Radius:	40.00 DOC: 143-14-22		
	Length:	35.15 Tangent: 18.80		
	Mid-Ord:	3.80 External: 4.20		
	Chord:	34.03 Course: S 23-59-46 E		
	Es:	4.20		
PI	306+89.71		2045154.5231	2588558.6800

Alignment: Museum

Desc: Museum Campus and along Rock River

Desc.	Station	Spiral/Curve Data	Northing	Easting
PI	200+00		2045086.6901	2587850.4760
	Length:	322.60 Course: S 48-49-35 E		
PI	203+22.60		2044874.3062	2588093.3051
	Length:	155.43 Course: S 09-09-32 E		
	Delta:	39-40-02		
		Tangent Data		
	200+00		2045086.6901	2587850.4760
	202+99.16		2044889.7408	2588075.6580
	Length:	299.16 Course: S 48-49-35 E		
		Circular Curve Data		
PC	202+99.16		2044889.7408	2588075.6580
CC			2044840.8141	2588032.8656
PT	203+44.16		2044851.1605	2588097.0369
	Delta:	39-40-02 Type: RIGHT		
	Radius:	65.00 DOC: 88-08-50		
	Length:	45.00 Tangent: 23.44		
	Mid-Ord:	3.86 External: 4.10		
	Chord:	44.11 Course: S 28-59-34 E		
	Es:	4.10		
PI	204+76.15		2044720.8552	2588118.0460
	Length:	221.93 Course: N 79-58-17 E		
	Delta:	90-52-10		
		Circular Curve Data		
PC	203+44.16		2044851.1605	2588097.0369
CC			2044871.8531	2588225.3795
PT	205+50.34		2044743.8394	2588248.0175
	Delta:	90-52-10 Type: LEFT		
	Radius:	130.00 DOC: 44-04-25		
	Length:	206.18 Tangent: 131.99		
	Mid-Ord:	38.78 External: 55.26		
	Chord:	185.24 Course: S 54-35-37 E		
	Es:	55.26		
PI	206+40.28		2044759.5017	2588336.5852
	Length:	89.94 Course: N 19-43-15 E		
	Delta:	60-15-02		
		Circular Curve Data		
PC	205+50.34		2044743.8394	2588248.0175
CC			2044896.4712	2588221.0260
PT	207+13.33		2044844.1685	2588366.9350
	Delta:	60-15-02 Type: LEFT		
	Radius:	155.00 DOC: 36-57-54		
	Length:	162.99 Tangent: 89.94		
	Mid-Ord:	20.94 External: 24.21		
	Chord:	155.59 Course: N 49-50-46 E		
	Es:	24.21		
PI	207+13.33		2044844.1685	2588366.9350
	Length:	52.88 Course: N 19-43-32 E		
	Delta:	0-00-17		
PI	207+66.21		2044893.9480	2588384.7836
	Length:	52.88 Course: N 42-42-32 E		
	Delta:	22-59-01		
		Circular Curve Data		
PC	207+13.33		2044844.1685	2588366.9350
CC			2044756.3751	2588611.7895
PT	208+17.67		2044932.8066	2588420.6526
	Delta:	22-59-01 Type: RIGHT		
	Radius:	260.12 DOC: 22-01-37		
	Length:	104.34 Tangent: 52.88		
	Mid-Ord:	5.21 External: 5.32		
	Chord:	103.65 Course: N 31-13-02 E		
	Es:	5.32		
PI	208+17.67		2044932.8066	2588420.6526
	Length:	261.17 Course: N 31-54-14 E		
	Delta:	10-48-18		
PI	210+78.84		2045154.5231	2588558.6800
	Length:	108.17 Course: N 29-37-21 E		
	Delta:	2-16-53		
		Tangent Data		
	208+17.67		2044932.8066	2588420.6526
	210+78.84		2045154.5231	2588558.6800
	Length:	261.17 Course: N 31-54-14 E		
PI	211+87.01		2045248.5524	2588612.1450
	Length:	49.16 Course: N 20-23-29 E		
	Delta:	9-13-52		
		Tangent Data		
	210+78.84		2045154.5231	2588558.6800
	211+87.01		2045248.5524	2588612.1450
	Length:	108.17 Course: N 29-37-21 E		
PI	212+36.17		2045294.6351	2588629.2750
	Length:	124.47 Course: N 28-44-08 E		
	Delta:	8-20-40		
		Tangent Data		
	211+87.01		2045248.5524	2588612.1450
	212+36.17		2045294.6351	2588629.2750
	Length:	49.16 Course: N 20-23-29 E		
PI	213+60.64		2045403.7726	2588689.1142
		Tangent Data		
	212+36.17		2045294.6351	2588629.2750
	213+60.64		2045403.7726	2588689.1142
	Length:	124.47 Course: N 28-44-08 E		

Alignment: Park-Main

Desc: Along Park Avenue and Main Street

Desc.	Station	Spiral/Curve Data	Northing	Easting
PI	9+50		2043980.9195	2587760.1025
	Length:	486.34 Course: N 61-59-47 W		
PI	14+36.34		2044209.2718	2587330.7010
	Length:	163.66 Course: N 28-03-20 E		
	Delta:	90-03-07		
		Tangent Data		
	9+50		2043980.9195	2587760.1025
	14+36.34		2044209.2718	2587330.7010
	Length:	486.34 Course: N 61-59-47 W		
PI	16+00		2044353.6969	2587407.6732
	Length:	640.41 Course: N 28-03-20 E		
	Delta:	0-00-00		
		Tangent Data		
	14+36.34		2044209.2718	2587330.7010
	16+00		2044353.6969	2587407.6732
	Length:	163.66 Course: N 28-03-20 E		
PI	22+40.41		2044918.8510	2587708.8751
	Length:	16.89 Course: N 29-25-58 E		
	Delta:	1-22-38		
		Tangent Data		
	16+00		2044353.6969	2587407.6732
	22+40.41		2044918.8510	2587708.8751
	Length:	640.41 Course: N 28-03-20 E		
PI	22+57.29		2044933.5574	2587717.1728
	Length:	16.89 Course: N 40-59-04 E		
	Delta:	11-33-07		
		Circular Curve Data		
PC	22+40.41		2044918.8510	2587708.8751
CC			2044836.8193	2587854.2638
PT	22+74.06		2044946.3042	2587728.2474
	Delta:	11-33-07 Type: RIGHT		
	Radius:	166.93 DOC: 34-19-20		
	Length:	33.66 Tangent: 16.89		
	Mid-Ord:	0.85 External: 0.85		
	Chord:	33.60 Course: N 35-12-31 E		
	Es:	0.85		
PI	22+74.06		2044946.3042	2587728.2474
	Length:	808.10 Course: N 41-02-41 E		
	Delta:	0-03-37		
PI	30+82.17		2045555.7716	2588258.8871
	Length:	58.28 Course: N 46-01-07 E		
	Delta:	4-58-26		
		Tangent Data		
	22+74.06		2044946.3042	2587728.2474
	30+82.17		2045555.7716	2588258.8871
	Length:	808.10 Course: N 41-02-41 E		
PI	31+40.45		2045596.2425	2588300.8232
	Length:	47.93 Course: N 40-37-28 E		
	Delta:	5-23-39		
		Tangent Data		
	30+82.17		2045555.7716	2588258.8871
	31+40.45		2045596.2425	2588300.8232
	Length:	58.28 Course: N 46-01-07 E		
PI	31+88.38		2045632.6206	2588332.0299
	Length:	82.11 Course: N 40-37-28 E		
	Delta:	0-00-00		
		Tangent Data		
	31+40.45		2045596.2425	2588300.8232
	31+88.38		2045632.6206	2588332.0299
	Length:	47.93 Course: N 40-37-28 E		
PI	32+70.49		2045694.9417	2588385.4918
	Length:	95.41 Course: N 40-25-14 E		
	Delta:	0-12-15		
		Tangent Data		
	31+88.38		2045632.6206	2588332.0299
	32+70.49		2045694.9417	2588385.4918
	Length:	82.11 Course: N 40-37-28 E		
PI	33+65.90		2045767.5776	2588447.3545
	Length:	29.55 Course: N 44-55-26 E		
	Delta:	4-30-12		
		Tangent Data		
	32+70.49		2045694.9417	2588385.4918
	33+65.90		2045767.5776	2588447.3545
	Length:	95.41 Course: N 40-25-14 E		
PI	33+95.44		2045788.4979	2588468.2192
	Length:	62.63 Course: N 47-40-02 E		
	Delta:	2-44-37		
		Tangent Data		
	33+65.90		2045767.5776	2588447.3545
	33+95.44		2045788.4979	2588468.2192
	Length:	29.55 Course: N 44-55-26 E		
PI	34+58.07		2045830.6750	2588514.5181
	Length:	24.68 Course: N 44-05-28 E		
	Delta:	3-34-35		
		Tangent Data		
	33+95.44		2045788.4979	2588468.2192
	34+58.07		2045830.6750	2588514.5181
	Length:	62.63 Course: N 47-40-02 E		
PI	34+82.75		2045848.3975	2588531.6871
	Length:	94.82 Course: N 40-34-51 E		
	Delta:	3-30-37		
		Tangent Data		
	34+58.07		2045830.6750	2588514.5181
	34+82.75		2045848.3975	2588531.6871
	Length:	24.68 Course: N 44-05-28 E		
PI	35+77.56		2045920.4103	2588593.3678
	Length:	187.27 Course: N 41-20-39 E		
	Delta:	0-45-48		
		Tangent Data		
	34+82.75		2045848.3975	2588531.6871
	35+77.56		2045920.4103	2588593.3678
	Length:	94.82 Course: N 40-34-51 E		
PI	37+64.83		2046061.0045	2588717.0748
		Tangent Data		
	35+77.56		2045920.4103	2588593.3678
	37+64.83		2046061.0045	2588717.0748
	Length:	187.27 Course: N 41-20-39 E		

SHEET REVIEW	
AGENCY	DATE

REVISIONS		
NO.	ITEM	DATE

SCALE:	N/A
DRAWN BY:	BCS
CHECKED BY:	JWH
DATE:	AUGUST 13, 2010

McClure Engineering Associates, Inc.
7282 Argus Drive
(815) 398-2332
Rockford, Illinois 61107-5837
FAX (815) 398-2496
Design Firm License: Illinois 184-000816

HORIZONTAL & VERTICAL CONTROL

RIVERWALK MUSEUM CAMPUS

711 NORTH MAIN STREET — ROCKFORD, IL

FILE: H:\08-008 RIVERWALK MUSEUM\DESIGN\DRAWINGS\08-008 OVERALL HORIZ-VERTICAL.DWG — JOB: 04-28-10-008

SHEET NO. 16 OF 148

F.A. RTE.	SECTION	COUNTY	TOTAL SHEETS	SHEET NO.
	06-00543-00-BT	WINNEBAGO	148	17
FED. ROAD DIST. NO.		ILLINOIS	CONTRACT NO.	85521

SCALE:
PLAN: 1"= 30'
0 30 60
Scale in Feet

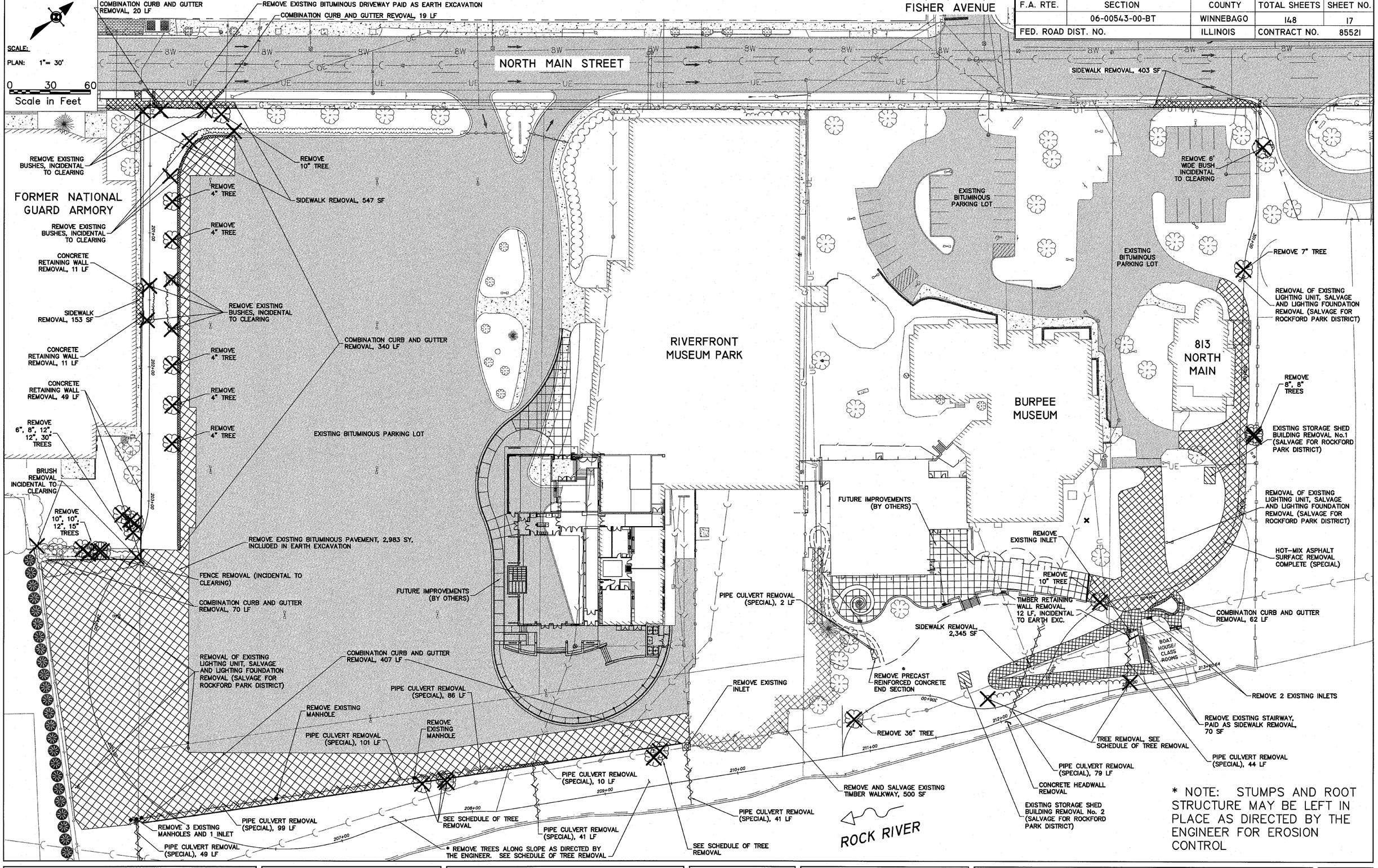

* NOTE: STUMPS AND ROOT STRUCTURE MAY BE LEFT IN PLACE AS DIRECTED BY THE ENGINEER FOR EROSION CONTROL

SHEET REVIEW	
AGENCY	DATE

REVISIONS		
NO.	ITEM	DATE

SCALE:	Hor. 1"=30'
DRAWN BY:	MS
CHECKED BY:	JMH
DATE:	AUGUST 13, 2010

McClure Engineering Associates, Inc.
7282 Argus Drive Rockford, Illinois 61107-5837
(815) 398-2332 FAX (815) 398-2496
Design Firm License: Illinois 184-000816

REMOVAL PLAN

RIVERWALK MUSEUM CAMPUS

711 NORTH MAIN STREET — ROCKFORD, IL

FILE:H:\08-008 RIVERWALK MUSEUM\DESIGN\DRAWINGS\08-008 REMOVAL PLAN.DWG — JOB:04-28-10-008

SHEET NO. 17 OF 148

F.A. RTE.	SECTION	COUNTY	TOTAL SHEETS	SHEET NO.
	06-00543-00-BT	WINNEBAGO	148	18
FED. ROAD DIST. NO.		ILLINOIS	CONTRACT NO.	85521

F.E.S. A1
24" P.R.C.F.E.S.
205+65.6, 40.3' RT
IE = 717.04

MH A2
MANHOLE TYPE A, 4' DIA.
205+48.8, 17.1' RT.
TYPE 1 F&G
RIM = 726.41
IE = 719.76 (N) IN
IE = 717.76 (E) OUT

INLET SPECIAL No.1 A3
INLET TYPE 700
205+49.6, 7.0' RT
EP = 725.20 TC=725.61
IE = 720.06 (N) IN
IE = 719.96 OUT

INLET SPECIAL No.1 A4
INLET TYPE 700
205+51.1, 7.0' LT
EP = 725.00 TC=725.41
IE = 720.40 (N) IN
IE = 720.30 OUT

INL A5
INLET SPECIAL No.2
205+59.2, 26.5' LT
EP = 727.40 TC 727.81
IE = 722.76 (N) IN
IE = 720.76 OUT

INLET SPECIAL No.1 A6
INLET TYPE 700
206+18.5, 45.7' LT
EP = 727.64 TC=728.05
IE = 723.32 (N) IN
IE = 723.22 OUT

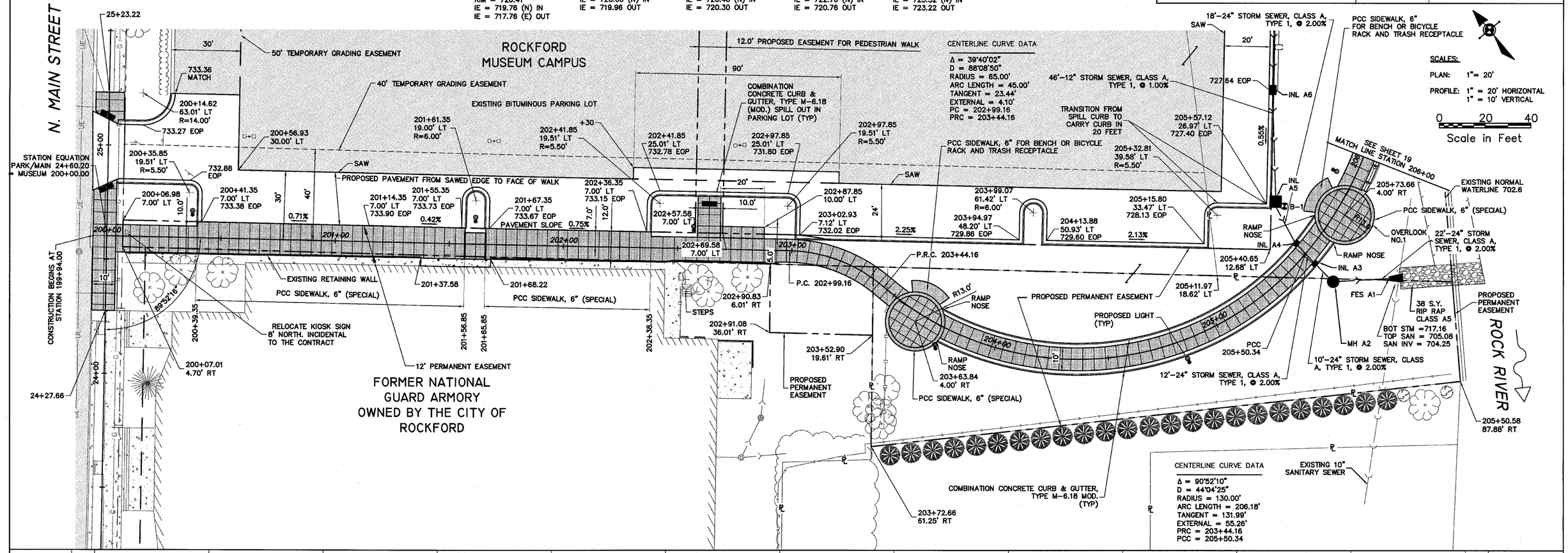

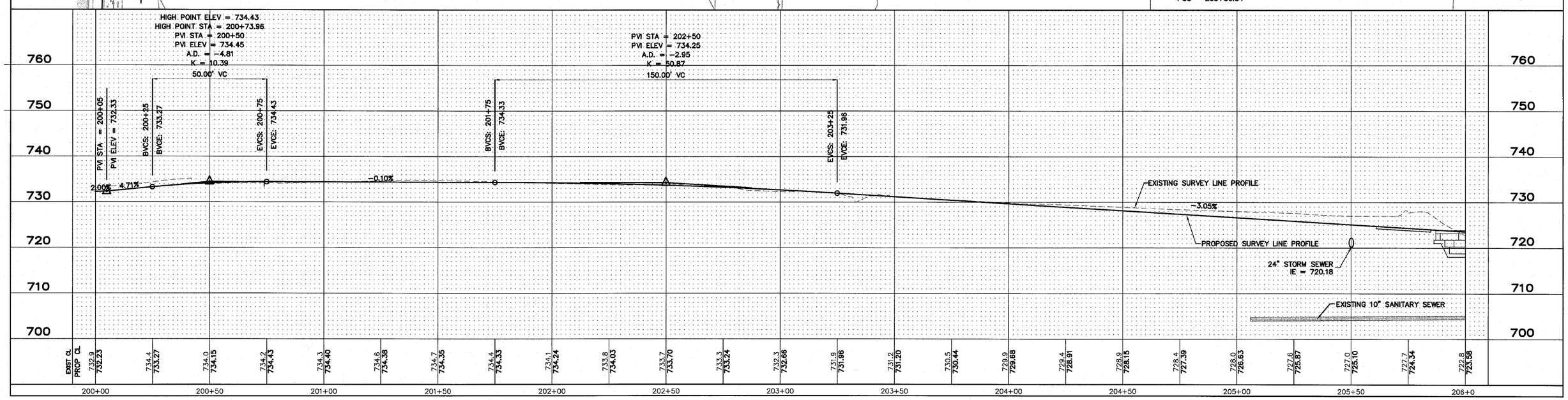

SHEET REVIEW	
AGENCY	DATE

REVISIONS		
NO.	ITEM	DATE

SCALE:	Hor. 1"=20' Ver. 1"=5'
DRAWN BY:	MS
CHECKED BY:	JWH
DATE:	AUGUST 13, 2010

McClure Engineering Associates, Inc.
7282 Argus Drive Rockford, Illinois 61107-5837
(815) 398-2332 FAX (815) 398-2496
Design Firm License: Illinois 184-000816

PLAN & PROFILE - 200+00 TO 206+00

RIVERWALK MUSEUM CAMPUS

711 NORTH MAIN STREET — ROCKFORD, IL

FILE:H:\08-008 RIVERWALK MUSEUM\DESIGN\DRAWINGS\08-008 PP 200+00 TO 206+00.DWG — JOB:04-28-10-008

SHEET NO. 18 OF 148

H:\08-008 RIVERWALK MUSEUM\DESIGN\DRAWINGS\08-008 PP 200+00 TO 206+00.DWG, 200+00 TO 206+00, 9/1/2010 2:33:26 PM,
I.L. MONTY

F.A. RTE.	SECTION	COUNTY	TOTAL SHEETS	SHEET NO.
	06-00543-00-BT	WINNEBAGO	148	19
FED. ROAD DIST. NO.		ILLINOIS	CONTRACT NO.	85521

ROCKFORD MUSEUM CAMPUS

COORDINATE WITH ROCKFORD ASSOCIATES PLANS

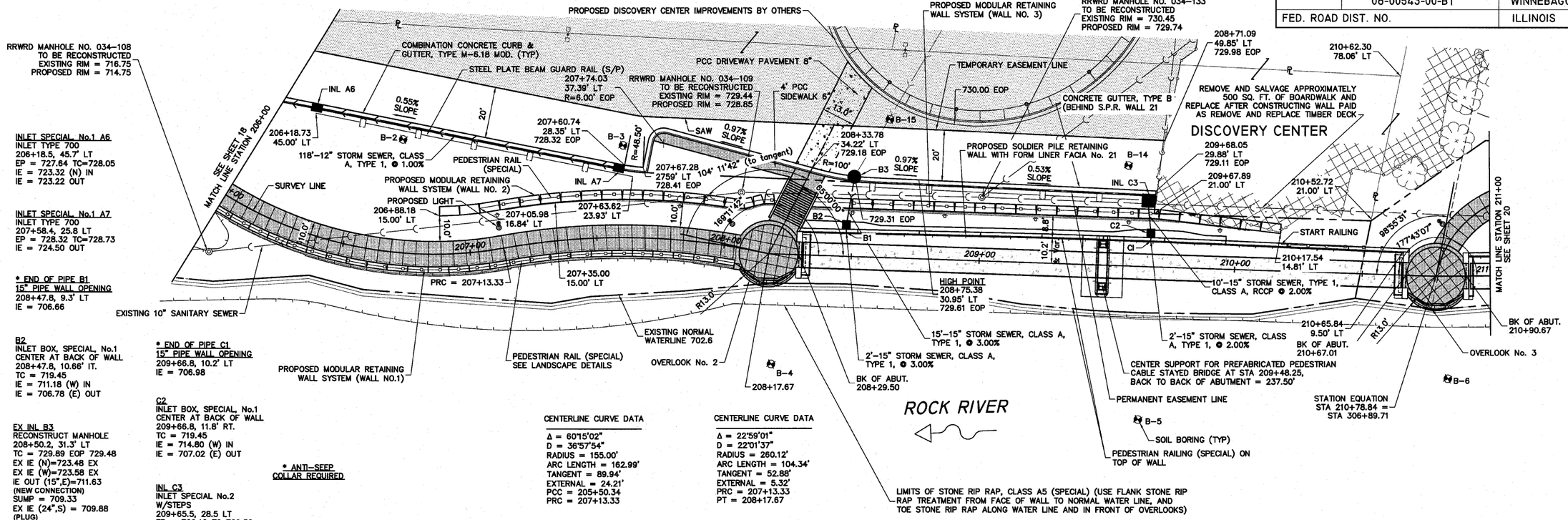

SHEET REVIEW	
AGENCY	DATE

REVISIONS		
NO.	ITEM	DATE

SCALE:	Hor. 1"=20' Ver. 1"=5'
DRAWN BY:	MS
CHECKED BY:	JWH
DATE:	AUGUST 13, 2010

McClure Engineering Associates, Inc.
7282 Argus Drive (815) 399-2332
Rockford, Illinois 61107-5837 FAX (815) 398-2496
Design Firm License: Illinois 184-000816

PLAN & PROFILE - 206+00 TO 211+00

RIVERWALK MUSEUM CAMPUS

711 NORTH MAIN STREET — ROCKFORD, IL

FILE:H:\08-008 RIVERWALK MUSEUM\DESIGN\DRAWINGS\08-008 PP 206+00 TO 211+00.DWG — JOB: 04-28-10-008

SHEET NO. 19 OF 148

F.A. RTE.	SECTION	COUNTY	TOTAL SHEETS	SHEET NO.
	06-00543-00-BT	WINNEBAGO	148	20
FED. ROAD DIST. NO.		ILLINOIS	CONTRACT NO.	85521

* END OF PIPE D1
18" PIPE WALL OPENING
211+20.6, 7.5' LT
IE = 709.79

MH D2
RESTRICTED DEPTH
MANHOLE, 4' DIA. WITH
TYPE 1 F&C.L.
306+30.9, 32.9' RT
RIM = 719.53
IE = 713.64 (W) IN
IE = 711.05 (E) OUT

* END OF PIPE E1
18" PIPE WALL OPENING
212+72.0, 5.8' LT
IE = 702.15

MH E2
MANHOLE TYPE A, 4' DIA.
TYPE 1 F&G CLOSED LID
304+66.3, 10.7' LT
RIM = 720.25
IE = 715.67 (N) IN
IE = 711.79 (SW) IN
IE = 711.69 (E) OUT

EX MH E3
EXISTING V.I.F.
MANHOLE TYPE A, 4' DIA.
TYPE 1 F&G CLOSED LID
304+70.0, 19.5' RT
RIM = 721.47 (EX)
IE = 715.42 (EX 15"SW) IN
IE = 712.13 (EX 15" W) IN
IE = 712.07 (E) OUT
(NEW CONNECTION)
IE (EX 15") = 712.03
(PLUG)

MH E4
MANHOLE TYPE A, 4' DIA.
212+71.4, 21.6' LT.
TYPE 1 F&G
RIM = 718.10
IE = 711.53 (W) IN
IE = 704.05 (E) OUT

INL F1
INLET SPECIAL No.2
304+02.3, 7.0' LT
EP = 721.98 TC 722.38
IE = 716.30 (E) IN
IE = 716.18 OUT

INL F2
INLET TYPE A, WITH
TYPE 8 GRATE
303+98.8, 24.6' LT
RIM = 718.23
IE = 716.53 IN
IE = 716.43 OUT

INL F3
TRENCH DRAIN
MODEL:ACO DRAIN
KO30-OUTLET B
GRATE-SLOTTED COMP.
RIM = 719.15
IE =716.50

* END OF PIPE G1
6" PIPE WALL OPENING
211+79.9, 7.5' LT
IE = 706.00

* ANTI-SEEP
COLLAR REQUIRED

CONFLICT NO. 1
BOT STM =711.43
TOP SAN = 708.92
SAN INV = 708.10

CONFLICT NO. 2
BOT STM =710.10
TOP SAN = 708.63
SAN INV = 707.80

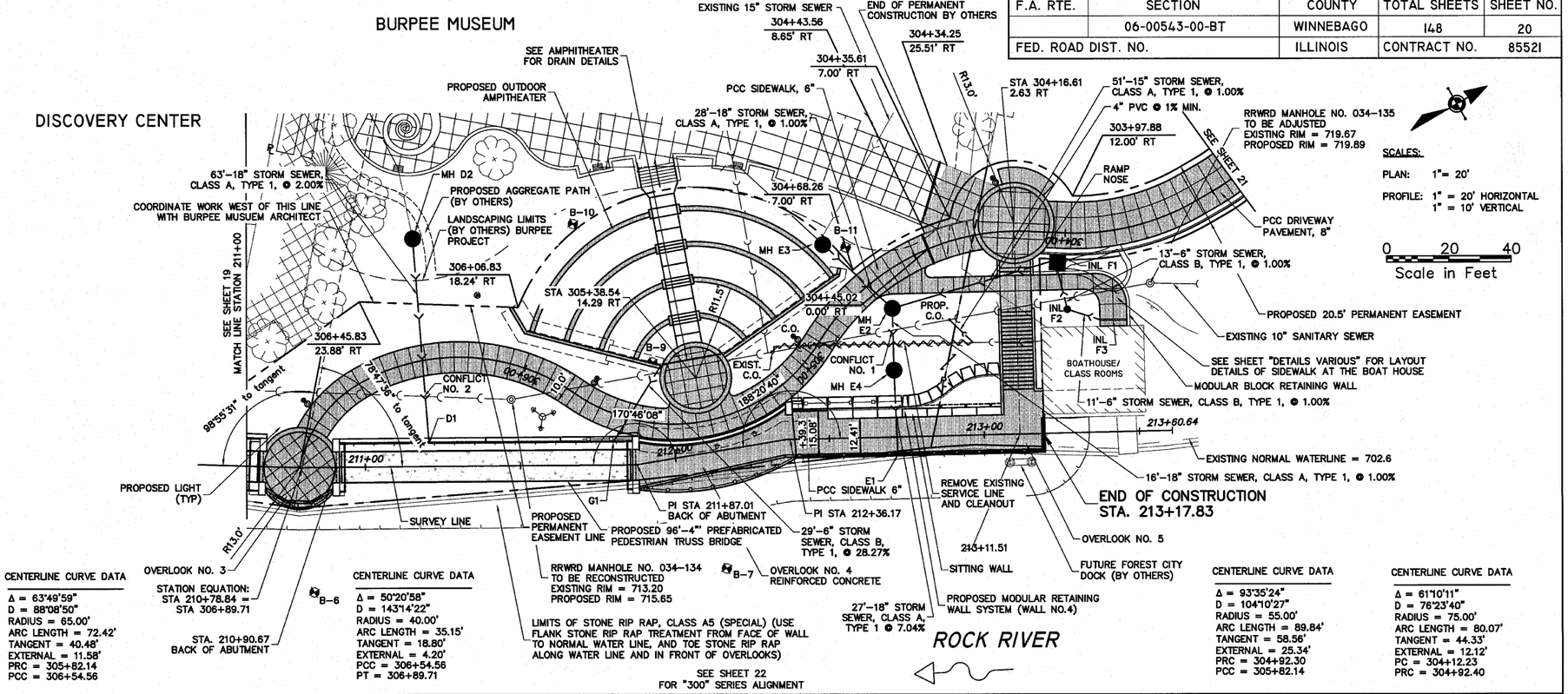

CENTERLINE CURVE DATA

Δ = 63°49'59"
D = 88°08'50"
RADIUS = 65.00'
ARC LENGTH = 72.42'
TANGENT = 40.48'
EXTERNAL = 11.58'
PRC = 305+82.14
PCC = 306+54.56

CENTERLINE CURVE DATA

Δ = 50°20'58"
D = 143°14'22"
RADIUS = 40.00'
ARC LENGTH = 35.15'
TANGENT = 18.80'
EXTERNAL = 4.20'
PCC = 306+54.56
PT = 306+89.71

CENTERLINE CURVE DATA

Δ = 93°35'24"
D = 104°10'27"
RADIUS = 55.00'
ARC LENGTH = 89.84'
TANGENT = 58.56'
EXTERNAL = 25.34'
PRC = 304+92.30
PCC = 305+82.14

CENTERLINE CURVE DATA

Δ = 61°10'11"
D = 76°23'40"
RADIUS = 75.00'
ARC LENGTH = 80.07'
TANGENT = 44.33'
EXTERNAL = 12.12'
PC = 304+12.23
PRC = 304+92.40

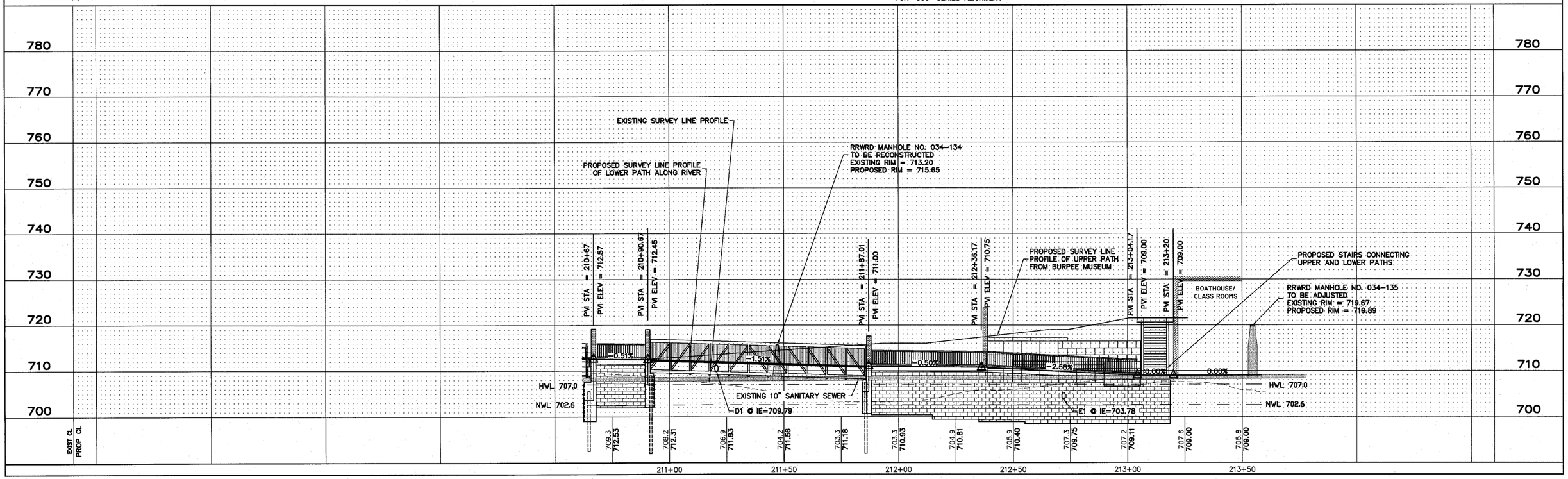

SHEET REVIEW	
AGENCY	DATE

REVISIONS		
NO.	ITEM	DATE

SCALE:	Hor. 1"=20' Ver. 1"=5'
DRAWN BY:	MS
CHECKED BY:	JWH
DATE:	AUGUST 13, 2010

McClure Engineering Associates, Inc.
7282 Argus Drive Rockford, Illinois 61107-5637
(815) 398-2332 FAX (815) 398-2496
Design Firm License: Illinois 184-000816

PLAN & PROFILE - 211+00 TO END

RIVERWALK MUSEUM CAMPUS

711 NORTH MAIN STREET — ROCKFORD, IL

FILE:H:\08-008 RIVERWALK MUSEUM\DESIGN\DRAWINGS\08-008 PP 211+00 TO END.DWG — JOB:04-28-10-008

SHEET NO. 20 OF 148

F.A. RTE.	SECTION	COUNTY	TOTAL SHEETS	SHEET NO.
	06-00543-00-BT	WINNEBAGO	148	21
FED. ROAD DIST. NO.		ILLINOIS	CONTRACT NO.	85521

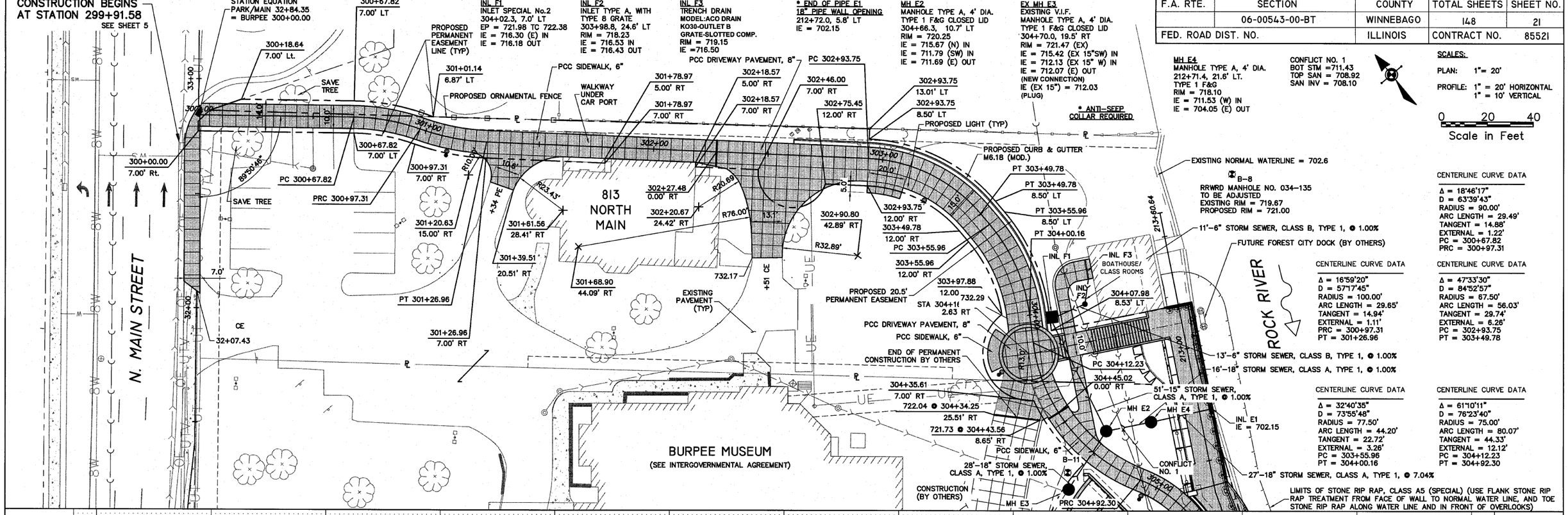

SHEET REVIEW	
AGENCY	DATE

REVISIONS		
NO.	ITEM	DATE

SCALE:	Hor. 1"=20' Ver. 1"=5'
DRAWN BY:	MS
CHECKED BY:	JWH
DATE:	AUGUST 13, 2010

McClure Engineering Associates, Inc.
7282 Argus Drive (815) 398-2332
Rockford, Illinois 61107-5837 FAX (815) 398-2496
Design Firm License: Illinois 184-000816

PLAN & PROFILE - 300+00 TO 305+00

RIVERWALK MUSEUM CAMPUS

711 NORTH MAIN STREET — ROCKFORD, IL

FILE:H:\08-008 RIVERWALK MUSEUM\DESIGN\DRAWINGS\08-008 PP 300+00 TO 305+00.DWG — JOB:04-28-10-008

SHEET NO. 21 OF 148

F.A. RTE.	SECTION	COUNTY	TOTAL SHEETS	SHEET NO.
	06-00543-00-BT	WINNEBAGO	148	22
FED. ROAD DIST. NO.		ILLINOIS	CONTRACT NO.	85521

CENTERLINE CURVE DATA

Δ = 61°10'11"
D = 76°23'40"
RADIUS = 75.00'
ARC LENGTH = 80.07'
TANGENT = 44.33'
EXTERNAL = 12.12'
PC = 304+12.23
PRC = 304+92.40

CENTERLINE CURVE DATA

Δ = 93°35'24"
D = 104°10'27"
RADIUS = 55.00'
ARC LENGTH = 89.84'
TANGENT = 58.56'
EXTERNAL = 25.34'
PRC = 304+92.30
PCC = 305+82.14

CENTERLINE CURVE DATA

Δ = 63°49'59"
D = 88°08'50"
RADIUS = 65.00'
ARC LENGTH = 72.42'
TANGENT = 40.48'
EXTERNAL = 11.58'
PRC = 305+82.14
PCC = 306+54.56

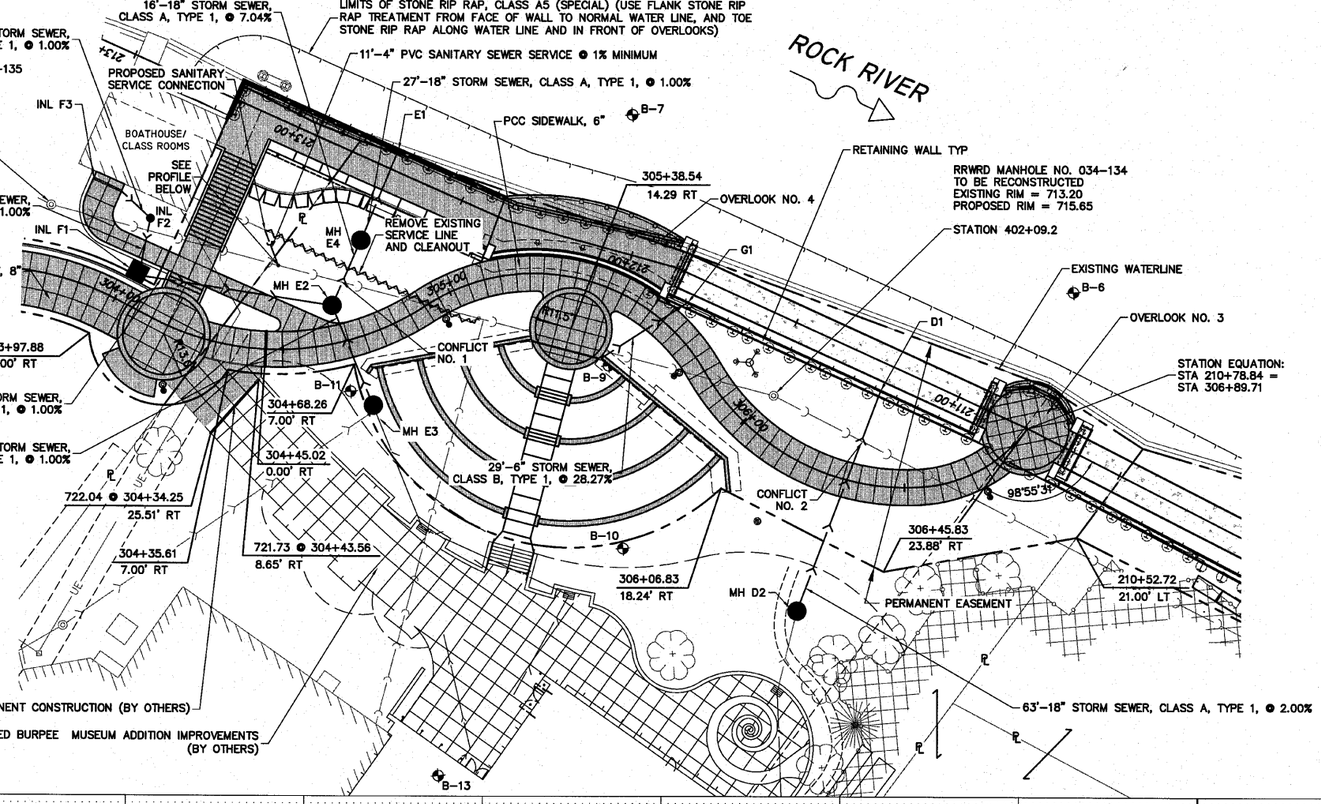

* END OF PIPE D1
18" PIPE WALL OPENING
211+20.6, 7.5' LT
IE = 709.79

MH D2
RESTRICTED DEPTH MANHOLE, 4' DIA. WITH TYPE 1 F&C.L.
306+30.9, 32.9' RT
RIM = 719.53
IE = 713.64 (W) IN
IE = 711.05 (E) OUT

* END OF PIPE F1
18" PIPE WALL OPENING
212+72.0, 5.8' LT
IE = 702.15

MH E2
MANHOLE TYPE A, 4' DIA.
TYPE 1 F&G CLOSED LID
304+66.3, 10.7' LT
RIM = 720.25
IE = 715.67 (N) IN
IE = 711.79 (SW) IN
IE = 711.69 (E) OUT

EX MH E3
EXISTING V.I.F.
MANHOLE TYPE A, 4' DIA.
TYPE 1 F&G CLOSED LID
304+70.0, 19.5' RT
RIM = 721.47 (EX)
IE = 715.42 (EX 15"SW) IN
IE = 712.13 (EX 15" W) IN
IE = 712.07 (E) OUT
(NEW CONNECTION)
IE (EX 15") = 712.03
(PLUG)

INL F1
INLET SPECIAL No.2
304+02.3, 7.0' LT
EP = 721.98 TC 722.38
IE = 716.30 (E) IN
IE = 716.18 OUT

INL F2
INLET TYPE A, WITH TYPE 8 GRATE
303+98.8, 24.6' LT
RIM = 718.23
IE = 716.53 IN
IE = 716.43 OUT

INL F3
TRENCH DRAIN
MODEL:ACO DRAIN
K039-OUTLET B
GRATE-SLOTTED COMP.
RIM = 719.15
IE =716.50

* END OF PIPE G1
6" PIPE WALL OPENING
305+65.4, 8.6' LT
IE = 706.00

* ANTI-SEEP COLLAR REQUIRED

MH E4
MANHOLE TYPE A, 4' DIA.
212+71.4, 21.6' LT.
TYPE 1 F&G
RIM = 718.10
IE = 711.53 (W) IN
IE = 704.05 (E) OUT

SCALES:
PLAN: 1"= 20'
PROFILE: 1" = 20' HORIZONTAL
1" = 10' VERTICAL

0 20 40
Scale in Feet

CONFLICT NO. 1
BOT STM =711.43
TOP SAN = 708.92
SAN INV = 708.10

CONFLICT NO. 2
BOT STM =710.10
TOP SAN = 708.63
SAN INV = 707.80

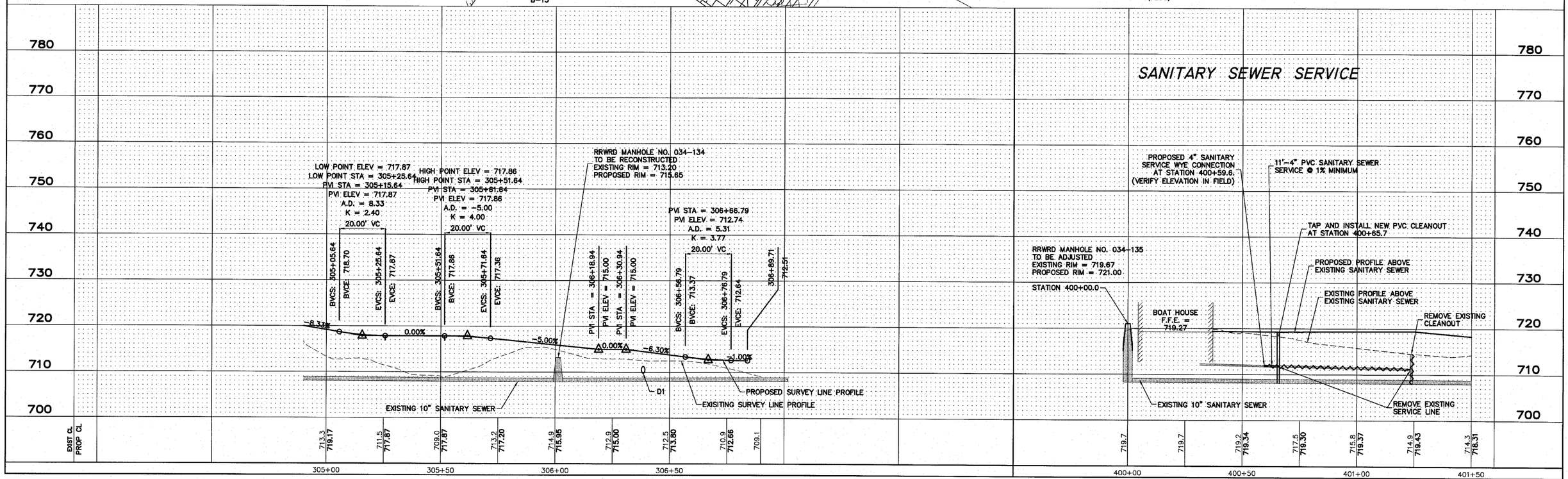

SHEET REVIEW	
AGENCY	DATE

REVISIONS		
NO.	ITEM	DATE

SCALE:	Hor. 1"=20' Ver. 1"=5'
DRAWN BY:	MS
CHECKED BY:	JWH
DATE:	AUGUST 13, 2010

McClure Engineering Associates, Inc.
7282 Argus Drive Rockford, Illinois 61107-5637
(815) 398-2332 FAX (815) 398-2496
Design Firm License: Illinois 184-000816

PLAN & PROFILE - 305+00 TO END

RIVERWALK MUSEUM CAMPUS

711 NORTH MAIN STREET — ROCKFORD, IL

FILE:H:\08-008 RIVERWALK MUSEUM\DESIGN\DRAWINGS\08-008 PP 305+00 TO END.DWG — JOB:04-28-10-008

SHEET NO. 22 OF 148

	06-00543-00-BT	WINNEBAGO	148	23
FED. ROAD DIST. NO.	ILLINOIS	CONTRACT NO.		85521

1. COMBINATION CONCRETE CURB AND GUTTER REMOVAL, 76 LF
2. CONCRETE MEDIAN SURFACE REMOVAL, 245 SF
3. ADJUST INLETS, 1 EACH
4. MAST ARM AND FOUNDATION TO REMAIN IN PLACE
5. COMBINATION CONCRETE CURB AND GUTTER, 76 LF TYPE-M6.18 (MOD)
6. CONCRETE MEDIAN SURFACE 4", 245 SF
7. DETECTABLE WARNINGS, 18 SF
8. HANDHOLE TO BE ADJUSTED, 1 EACH

1. COMBINATION CONCRETE CURB AND GUTTER REMOVAL, 74 LF
2. CONCRETE MEDIAN SURFACE REMOVAL, 269 SF
3. ADJUST INLETS, 2 EACH
4. MAST ARM AND FOUNDATION TO REMAIN IN PLACE
5. COMBINATION CONCRETE CURB AND GUTTER, 74 LF TYPE-M6.18 (MOD)
6. CONCRETE MEDIAN SURFACE 4", 269 SF
7. DETECTABLE WARNINGS, 12 SF
8. HANDHOLE TO BE ADJUSTED, 1 EACH

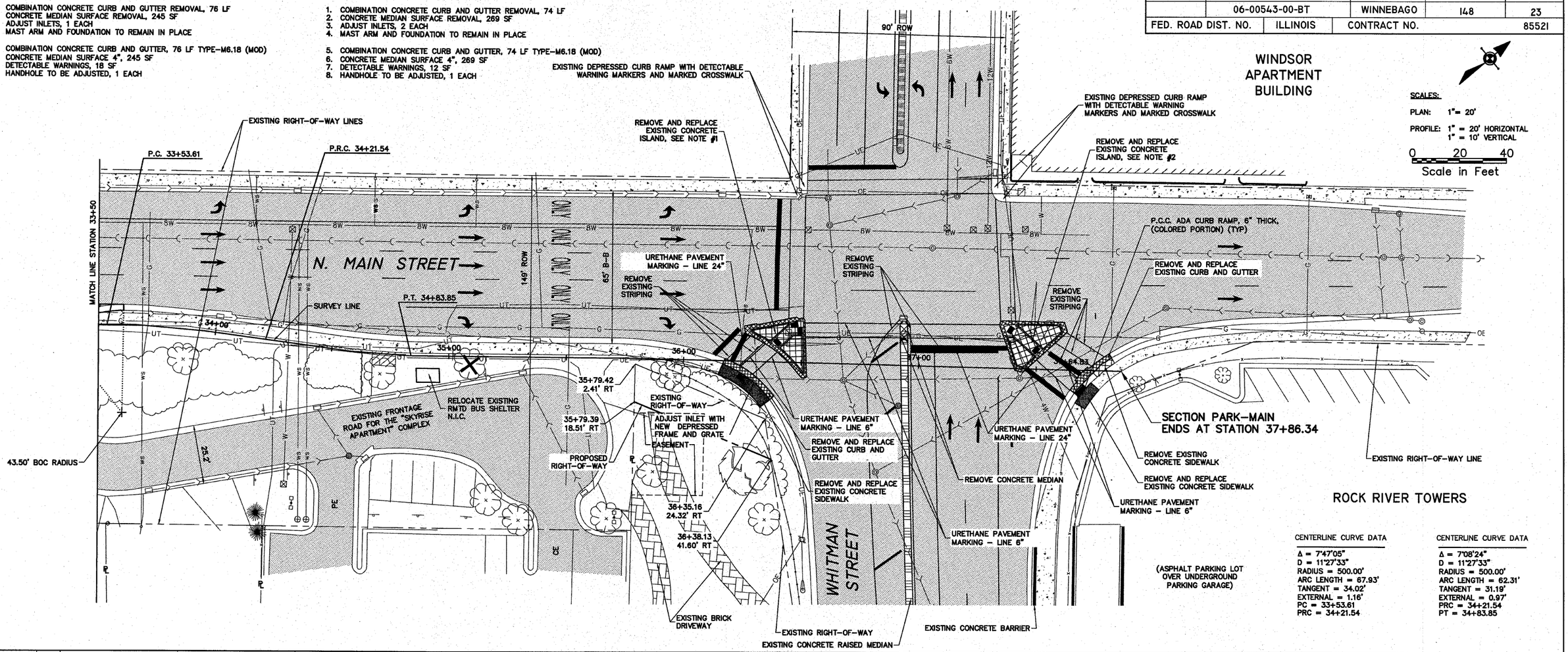

CENTERLINE CURVE DATA

Δ = 7°47'05"
D = 11°27'33"
RADIUS = 500.00'
ARC LENGTH = 67.93'
TANGENT = 34.02'
EXTERNAL = 1.16'
PC = 33+53.61
PRC = 34+21.54

CENTERLINE CURVE DATA

Δ = 7°08'24"
D = 11°27'33"
RADIUS = 500.00'
ARC LENGTH = 62.31'
TANGENT = 31.19'
EXTERNAL = 0.97'
PRC = 34+21.54
PT = 34+83.85

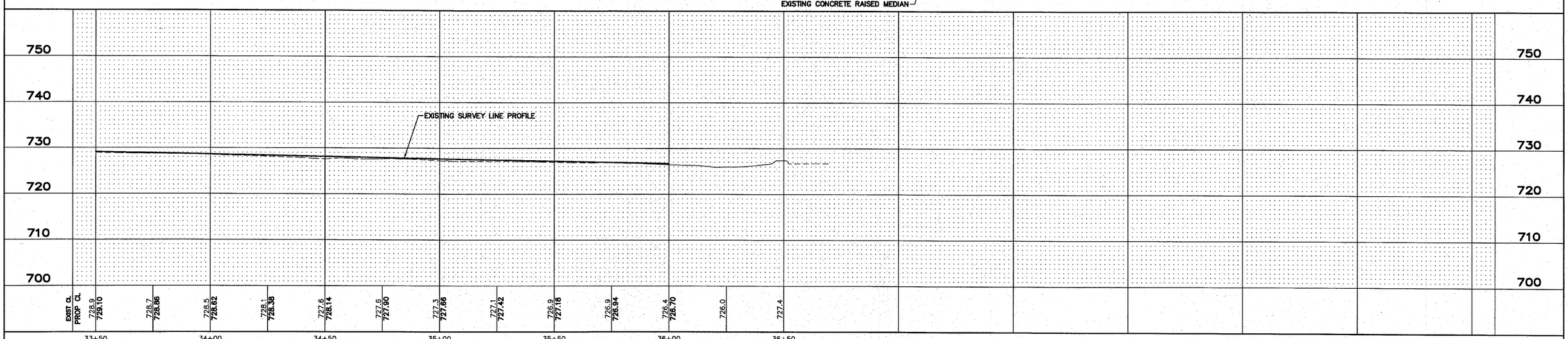

SHEET REVIEW	
AGENCY	DATE

REVISIONS		
NO.	ITEM	DATE

SCALE:	Hor. 1"=20' Ver. 1"=5'
DRAWN BY:	MS
CHECKED BY:	JWH
DATE:	AUGUST 13, 2010

McClure Engineering Associates, Inc.
7282 Argus Drive Rockford, Illinois 61107-5837
(815) 398-2332 FAX (815) 398-2496
Design Firm License: Illinois 184-000816

PLAN & PROFILE - 33+50 TO END

RIVERWALK MUSEUM CAMPUS

711 NORTH MAIN STREET — ROCKFORD, IL

FILE:H:\08-008 RIVERWALK MUSEUM\DESIGN\DRAWINGS\08-008 PP 33+50 TO END.DWG — JOB:04-28-10-008

SHEET NO. 23 OF 148

H:\08-008 RIVERWALK MUSEUM\DESIGN\DRAWINGS\08-008 PP 33+50 TO END.DWG, PLAN & PROFILE - 33+50 TO END, 9/14/2010 11:31:21 AM, ti, JWH

F.A. RTE.	SECTION	COUNTY	TOTAL SHEETS	SHEET NO.
	06-00543-00-BT	WINNEBAGO	148	24
FED. ROAD DIST. NO.		ILLINOIS	CONTRACT NO.	85521

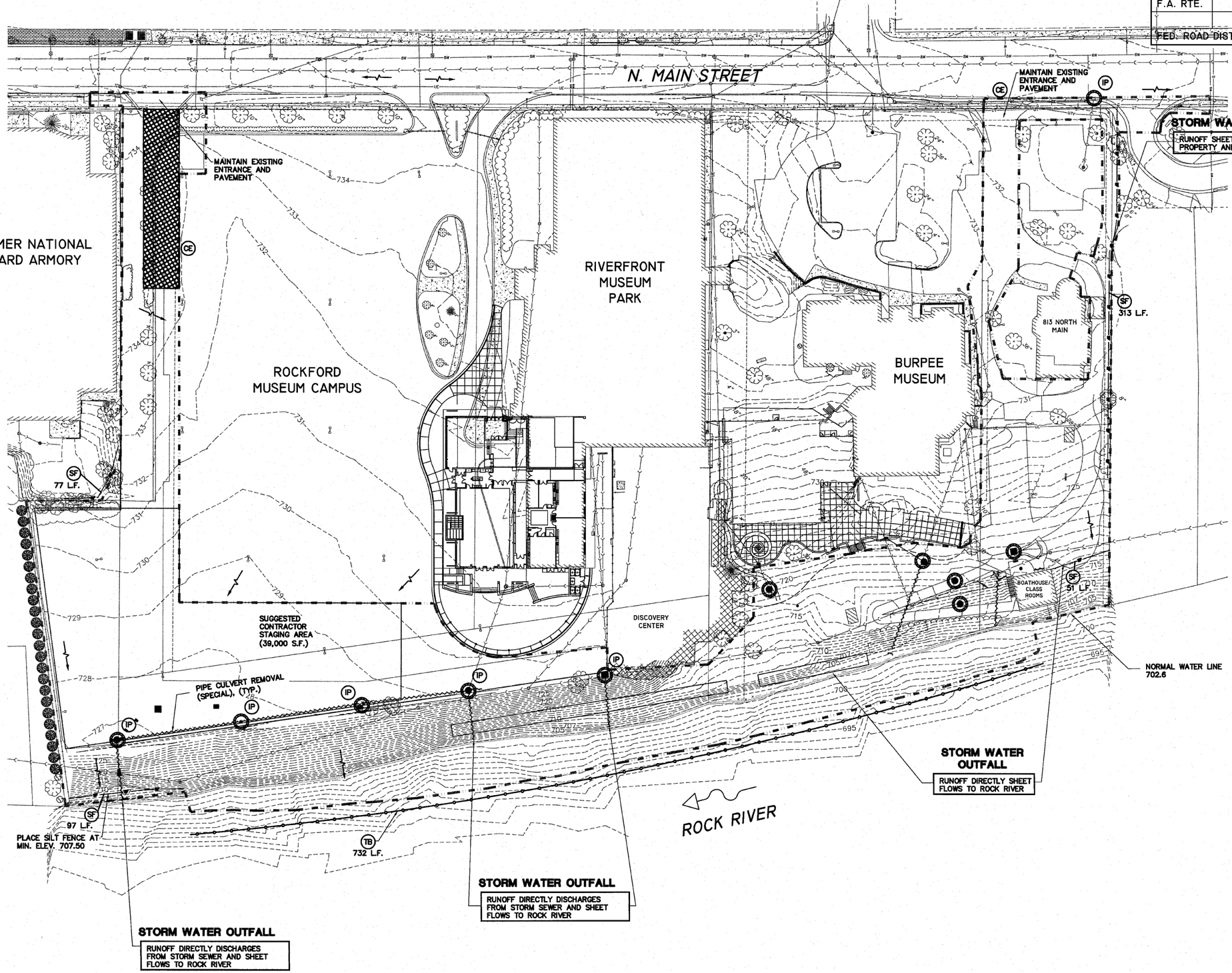

Call Before You Dig
JULIE ILLINOIS ONE-CALL SYSTEM
1-800-892-0123
TOLL FREE

SCALES:
PLAN: 1"= 40'
0 40 80
Scale in Feet

MAINTENANCE NOTES

ALL BMP MEASURES STATED ON THIS STORM WATER POLLUTION PREVENTION MAP AND PLAN SHALL BE MAINTAINED IN FULLY FUNCTIONAL CONDITION UNTIL NO LONGER REQUIRED FOR A COMPLETED PHASE OF WORK OR FINAL STABILIZATION OF THE ROADWAY PROJECT. ALL EROSION AND SEDIMENTATION CONTROL MEASURES SHALL BE CHECKED AND ENTERED INTO INSPECTION RECORD LOG BY A QUALIFIED PERSON AT LEAST ONCE EVERY SEVEN (7) CALENDAR DAYS AND WITHIN 24 HOURS OF THE END OF A 0.5" RAINFALL EVENT, AND CLEANED AND REPAIRED IN ACCORDANCE WITH THE FOLLOWING:

1. INLET PROTECTION DEVICES AND BARRIERS SHALL BE REPAIRED OR REPLACED IF THEY SHOW SIGNS OF UNDERMINING, OR DETERIORATION.
2. ALL SEEDED AREAS SHALL BE CHECKED REGULARLY TO SEE THAT A GOOD STAND IS ACHIEVED AND MAINTAINED. AREAS SHOULD BE FERTILIZED, WATERED, MULCHED AND RESEEDED AS NEEDED.
3. SILT FENCES SHALL BE REPAIRED TO THEIR ORIGINAL CONDITIONS IF DAMAGED. SEDIMENT SHALL BE REMOVED FROM THE SILT FENCES WHEN IT REACHES ONE-HALF THE HEIGHT OF THE SILT FENCE.
4. THE CONSTRUCTION AREA ACCESSES SHALL BE MAINTAINED IN A CONDITION WHICH WILL PREVENT TRACKING OR FLOW OF MUD ONTO PAVED ROAD SURFACES OR OUTSIDE WORK AREA. THIS MAY REQUIRE PERIODIC ROAD SWEEPING.

GENERAL NOTE:

1. SEE GENERAL NOTES AND DETAILS PAGE FOR ADDITIONAL STORM WATER POLLUTION PREVENTION AND SEEDING/TOPSOIL NOTES.
2. VICINITY/LOCATION MAP, QUANDRANGLE MAP, AND ADDITIONAL BMP DETAILS ARE LOCATED WITH DETAILS.
3. TURBIDITY BARRIER IS NOT REQUIRED WHERE TEMPORARY COFFERDAMS OR OTHER DEWATERING SYSTEMS PREVENT EROSION OR RUNOFF FROM ENTERING THE RIVER.
4. STUMPS AND ROOT MASS SHALL BE LEFT IN PLACE ALONG THE RIVER BANK AT THE DIRECTION OF THE ENGINEER WHERE GRADING OPERATIONS PERMIT AT THE DIRECTION OF THE ENGINEER.

KEY LEGEND

- (IP) INLET PROTECTION
- (SF) SILT FENCE, J HOOK ENDS — SF —
- SURFACE FLOW
- LIMITS OF DISTURBANCE
- EXISTING CONTOUR — 1030 —
- EXISTING STORM SEWER
- (FF) FIBER FLOCULENT ROLL — FF —
- (CD) SILT CHECK DAM
- (BLS) EROSION CONTROL BLANKET
- (RR) RIP-RAP PAD
- (CE) CONSTRUCITON ENTRANCE/EXIT
- (TB) TURBIDITY BARRIER

SHEET REVIEW	
AGENCY	DATE

REVISIONS		
NO.	ITEM	DATE

SCALE:	Hor. 1"=40'
DRAWN BY:	BCS
CHECKED BY:	JWH
DATE:	AUGUST 13, 2010

McClure Engineering Associates, Inc.
7282 Argus Drive Rockford, Illinois 61107-5837
(815) 398-2332 FAX (815) 398-2496
Design Firm License: Illinois 184-000816

EROSION AND SEDEMENTATION CONTROL MAP PH I

RIVERWALK MUSEUM CAMPUS

711 NORTH MAIN STREET ROCKFORD, IL

FILE:H:\08-008 RIVERWALK MUSEUM\DESIGN\DRAWINGS\08-008 SWPPP.DWG JOB:04-28-10-008

F.A. RTE.	SECTION	COUNTY	TOTAL SHEETS	SHEET NO.
	06-00543-00-BT	WINNEBAGO	148	25
FED. ROAD DIST. NO.		ILLINOIS	CONTRACT NO.	85521

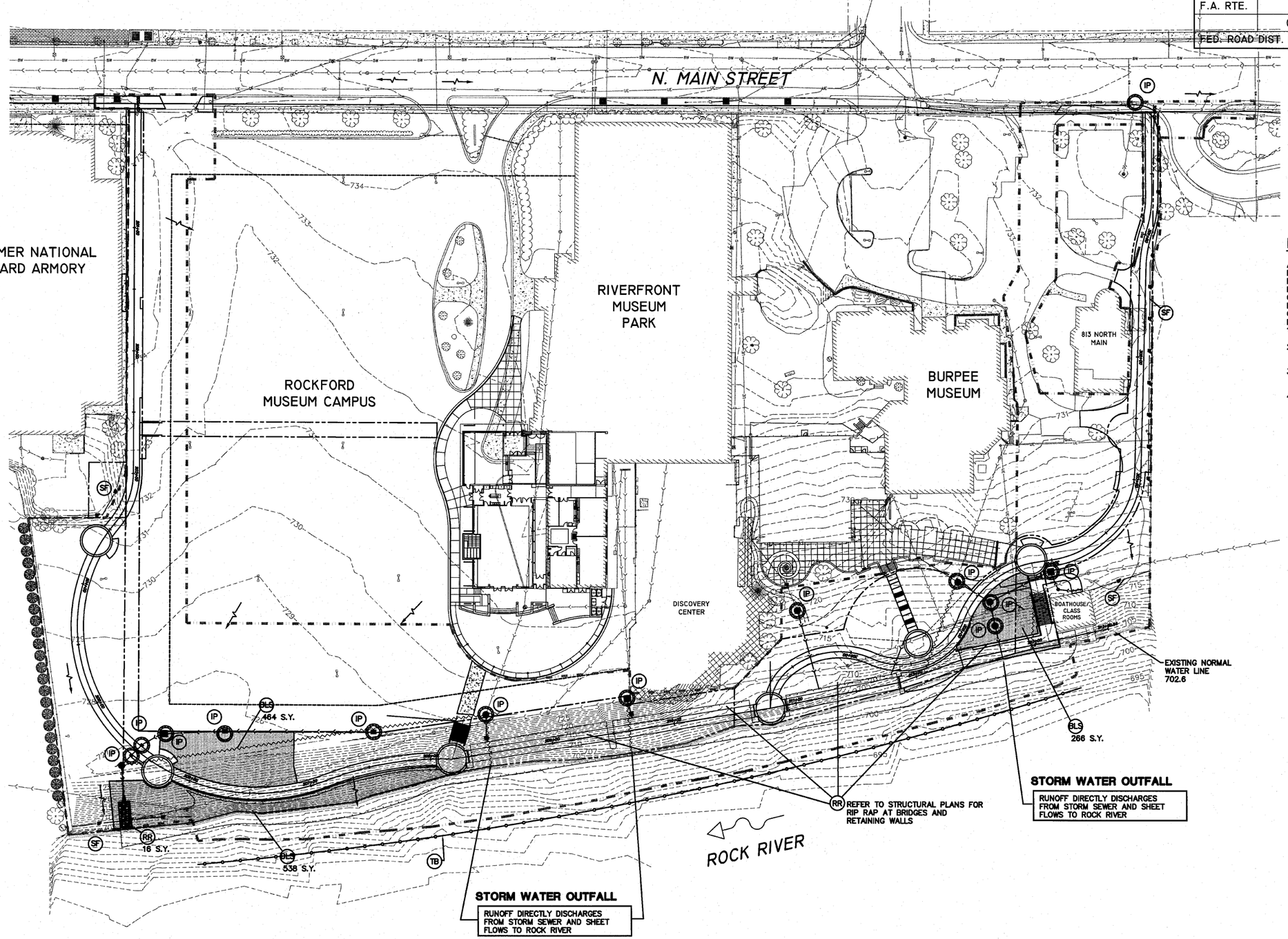

Call Before You Dig
JULIE ILLINOIS ONE CALL SYSTEM
1-800-892-0123
TOLL FREE

SCALES:
PLAN: 1"= 40'
0 40 80
Scale in Feet

MAINTENANCE NOTES

ALL BMP MEASURES STATED ON THIS STORM WATER POLLUTION PREVENTION MAP AND PLAN SHALL BE MAINTAINED IN FULLY FUNCTIONAL CONDITION UNTIL NO LONGER REQUIRED FOR A COMPLETED PHASE OF WORK OR FINAL STABILIZATION OF THE ROADWAY PROJECT. ALL EROSION AND SEDIMENTATION CONTROL MEASURES SHALL BE CHECKED AND ENTERED INTO INSPECTION RECORD LOG BY A QUALIFIED PERSON AT LEAST ONCE EVERY SEVEN (7) CALENDAR DAYS AND WITHIN 24 HOURS OF THE END OF A 0.5" RAINFALL EVENT, AND CLEANED AND REPAIRED IN ACCORDANCE WITH THE FOLLOWING:

1. INLET PROTECTION DEVICES AND BARRIERS SHALL BE REPAIRED OR REPLACED IF THEY SHOW SIGNS OF UNDERMINING, OR DETERIORATION.
2. ALL SEEDED AREAS SHALL BE CHECKED REGULARLY TO SEE THAT A GOOD STAND IS ACHIEVED AND MAINTAINED. AREAS SHOULD BE FERTILIZED, WATERED, MULCHED AND RESEEDED AS NEEDED.
3. SILT FENCES SHALL BE REPAIRED TO THEIR ORIGINAL CONDITIONS IF DAMAGED. SEDIMENT SHALL BE REMOVED FROM THE SILT FENCES WHEN IT REACHES ONE-HALF THE HEIGHT OF THE SILT FENCE.
4. THE CONSTRUCTION AREA ACCESSES SHALL BE MAINTAINED IN A CONDITION WHICH WILL PREVENT TRACKING OR FLOW OF MUD ONTO PAVED ROAD SURFACES OR OUTSIDE WORK AREA. THIS MAY REQUIRE PERIODIC ROAD SWEEPING.

GENERAL NOTE:

1. SEE GENERAL NOTES AND DETAILS PAGE FOR ADDITIONAL STORM WATER POLLUTION PREVENTION AND SEEDING/TOPSOIL NOTES.
2. VICINITY/LOCATION MAP, QUANDRANGLE MAP, AND ADDITIONAL BMP DETAILS ARE LOCATED WITH DETAILS.
3. TURBIDITY BARRIER IS NOT REQUIRED WHERE TEMPORARY COFFERDAMS OR OTHER DEWATERING SYSTEMS PREVENT EROSION OR RUNOFF FROM ENTERING THE RIVER.
4. STUMPS AND ROOT MASS SHALL BE LEFT IN PLACE ALONG THE RIVER BANK AT THE DIRECTION OF THE ENGINEER WHERE GRADING OPERATIONS PERMIT AT THE DIRECTION OF THE ENGINEER.

KEY LEGEND

- (IP) INLET PROTECTION
- (SF) SILT FENCE, J HOOK ENDS — SF —
- SURFACE FLOW
- LIMITS OF DISTURBANCE
- EXISTING CONTOUR — 1030 —
- EXISTING STORM SEWER
- (FF) FIBER FLOCULENT ROLL — FF —
- (CD) SILT CHECK DAM
- (BLS) EROSION CONTROL BLANKET
- (RR) RIP-RAP
- (CE) CONSTRUCITON ENTRANCE/EXIT
- (TB) TURBIDITY BARRIER

SHEET REVIEW	
AGENCY	DATE

REVISIONS		
NO.	ITEM	DATE

SCALE:	Hor. 1"=40'
DRAWN BY:	BCS
CHECKED BY:	JWH
DATE:	AUGUST 13, 2010

McClure Engineering Associates, Inc.
7282 Argus Drive
(815) 398-2332
Rockford, Illinois 61107-5837
FAX (815) 398-2496
Design Firm License: Illinois 184-000816

EROSION AND SEDEMENTATION CONTROL MAP PH 2

RIVERWALK MUSEUM CAMPUS

711 NORTH MAIN STREET — ROCKFORD, IL

FILE: H:\08-008 RIVERWALK MUSEUM\DESIGN\DRAWINGS\08-008 SWPPP.DWG — JOB: 04-28-10-008

SHEET NO. 25 OF 148

F.A. RTE.	SECTION	COUNTY	TOTAL SHEETS	SHEET NO.
	06-00543-00-BT	WINNEBAGO	148	26
FED. ROAD DIST. NO.	ILLINOIS	CONTRACT NO.		85521

STORMWATER POLLUTION PREVENTION

1. THE STORMWATER POLLUTION PREVENTION PLAN IS COMPRISED OF THE PLAN DRAWING MAPS, SWPPP PLAN NARRATIVE SPECIFICATIONS, THE PERMIT AND ALL SUBSEQUENT REPORTS AND RELATED DOCUMENTS.
2. ALL CONTRACTORS AND SUBCONTRACTORS INVOLVED WITH STORM WATER POLLUTION PREVENTION SHALL OBTAIN A COPY OF THE STORM WATER POLLUTION PREVENTION PLAN, ILLINOIS EPA NPDES GENERAL PERMIT, CITY OF ROCKFORD NPDES PERMIT, AND BECOME FAMILIAR WITH THEIR CONTENTS.
3. CONTRACTOR SHALL IMPLEMENT BEST MANAGEMENT PRACTICES AS REQUIRED BY THE SWPPP. ADDITIONAL BEST MANAGEMENT PRACTICES SHALL BE IMPLEMENTED AS DICTATED BY CONDITIONS AT NO ADDITIONAL COST TO OWNER THROUGHOUT ALL PHASES OF CONSTRUCTION.
4. BEST MANAGEMENT PRACTICES (BMP'S) AND CONTROLS SHALL CONFORM TO FEDERAL, STATE, OR LOCAL REQUIREMENTS OR MANUAL OF PRACTICE, AS APPLICABLE. CONTRACTOR SHALL IMPLEMENT ADDITIONAL CONTROLS AS DIRECTED BY PERMITTING AGENCY OR OWNER.
5. GENERAL CONTRACTOR SHALL DENOTE ON PLAN THE TEMPORARY PARKNG AND STORAGE AREA WHICH SHALL ALSO BE USED AS THE EQUIPMENT MAINTENANCE AND CLEANING AREA.
6. ALL WASH WATER (CONCRETE TRUCKS, VEHICLE CLEANING, EQUIPMENT CLEANING, ETC.) SHALL BE DETAINED AND PROPERLY TREATED OR DISPOSED.
7. SUFFICIENT OIL AND GREASE ABSORBING MATERIALS AND FLOTATION BOOMS SHALL BE MAINTAINED ON SITE OR READILY AVAILABLE TO CONTAIN AND CLEAN-UP FUEL OR CHEMICAL SPILLS AND LEAKS.
8. DISTURBED PORTIONS OF THE SITE WHERE CONSTRUCTION ACTIVITY HAS PERMANENTLY STOPPED SHALL BE PERMANENTLY SEEDED. THESE AREAS SHALL BE SEEDED NO LATER THAN 7 DAYS AFTER THE LAST CONSTRUCTION ACTIVITY OCCURRING IN THESE AREAS.
9. ALL MATERIALS SPILLED, DROPPED, WASHED, OR TRACKED FROM VEHICLES ONTO ROADWAY OR INTO STORM DRAINS MUST BE REMOVED IMMEDIATELY.
10. CONTRACTORS OR SUBCONTRACTORS WILL BE RESPONSIBLE FOR REMOVING SEDIMENT THAT MAY HAVE COLLECTED IN THE STORM SEWER DRAINAGE SYSTEMS IN CONJUNCTION WITH THE STABILIZATION OF THE SITE.
11. SLOPES SHALL BE LEFT IN A ROUGHENED CONDITION DURING THE GRADING PHASE TO REDUCE RUNOFF VELOCITIES AND EROSION.
12. DUE TO THE GRADE CHANGES DURING THE DEVELOPMENT OF THE PROJECT, THE CONTRACTORS SHALL BE RESPONSIBLE FOR ADJUSTING THE EROSION CONTROL MEASURES (SILT FENCES, DITCH CHECKS, ETC.) TO PREVENT EROSION.
13. ALL CONSTRUCTION SHALL BE STABILIZED AT THE END OF EACH WORKING DAY. THIS INCLUDES BACKFILLING OF TRENCHES FOR UTILITY CONSTRUCTION AND PLACEMENT OF GRAVEL OR HMA PAVING FOR ROAD CONSTRUCTION.
14. INLET PROTECTION MUST BE PROVIDED AND MAINTAINED FOR ALL PROPOSED INLETS UNTIL FINAL GRADES HAVE BEEN ESTABLISHED.
15. THE EROSION CONTROL MEASURES INDICATED ON THE DRAWING MAPS ARE THE MINIMUM REQUIREMENTS.
16. TEMPORARY SLOPES AND GROUND SHALL BE MAINTAINED IN ROUGHENED STATE AS A BMP TO DISCOURAGE RILL EROSION.

TOPSOIL / SEEDING

1. DISTURBED AREAS ARE LOCATIONS WHERE THE CONTRACTOR'S OPERATIONS HAVE DAMAGED EXISTING GROUND COVER AND/OR TOPSOIL OUTSIDE OF THE LIMITS OF CONSTRUCTION AS SHOWN IN THE PLANS. SEEDING OF THESE DISTURBED AREAS IS INCLUDED IN ALL THE OTHER PROJECT PAY ITEMS AND NO ADDITIONAL COMPENSATION IS ALLOWED.
2. THE FINAL TOP 6 INCHES OF SOIL IN ANY AREA MUST BE A COHESIVE SOIL CAPABLE OF SUPPORTING VEGETATION.
3. FERTILIZER SHALL BE APPLIED AT A RATE OF 300 LBS/ACRE TO ALL DISTURBED AREAS AND INCORPORATED INTO THE SEEDBED PRIOR TO SOWING THE SEED. A SECOND FERTILIZER APPLICATION 3-WEEKS AFTER SEEDING OF 10-10-10, 250 LBS/ACRE, IF GOOD STAND IS ACHIEVED.
4. THE CONTRACTOR SHALL SEED ALL AREAS WITHIN THE LIMITS OF CONSTRUCTION WITH SEEDING, CLASS 1 IN ACCORDANCE WITH IDOT STANDARD SPECIFICATIONS OR AS APPROVED BY THE ENGINEER.
5. THE EXACT LOCATION OF PLANT PLACEMENT SHALL BE ADJUSTED IN THE FIELD TO AVOID UNDERGROUND AND OVERHEAD UTILITIES.

ROCKFORD NORTH USGS QUADRANGLE MAP (N.T.S.)

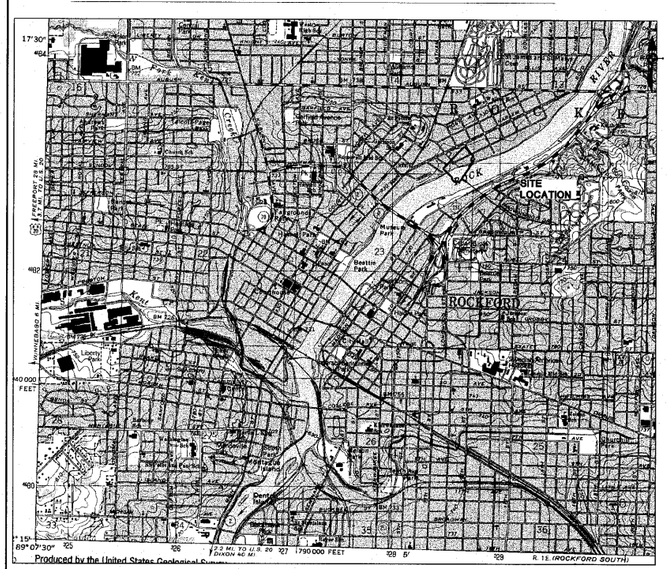

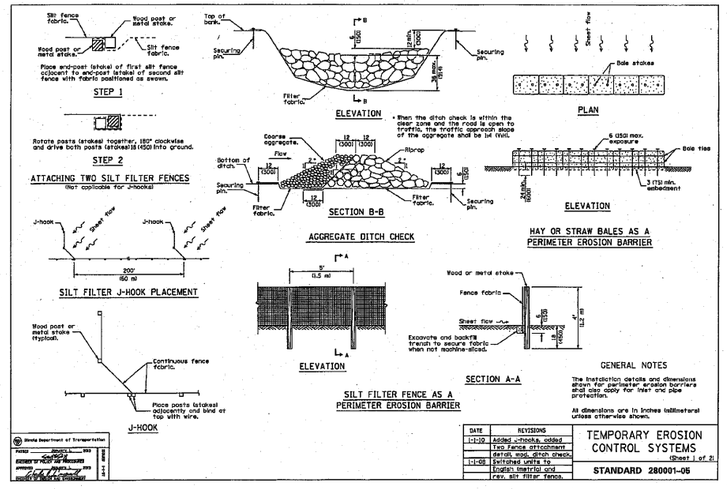

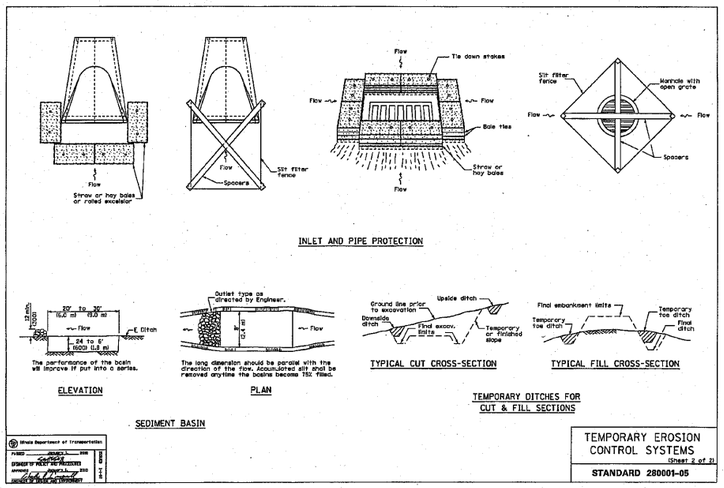

STANDARDS ARE INCLUDED IN THE CONTRACT DOCUMENTS

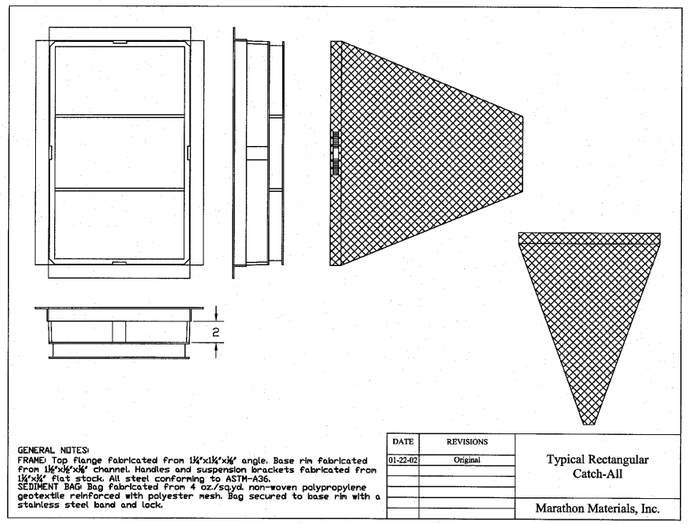

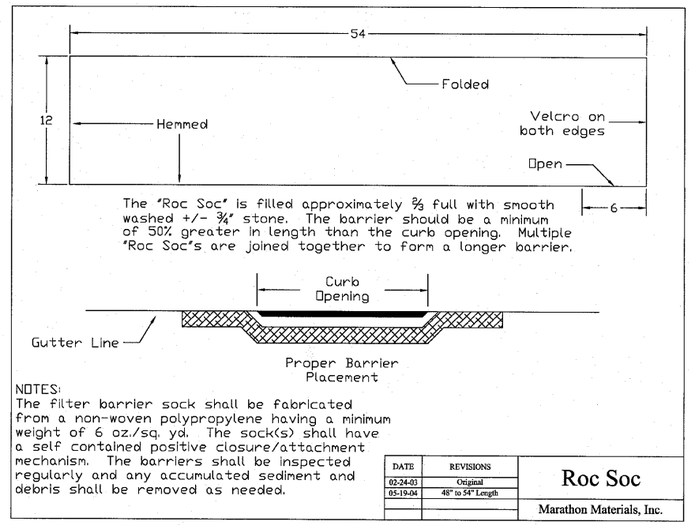

MAINTENANCE NOTES

ALL BMP MEASURES STATED ON THIS STORM WATER POLLUTION PREVENTION MAP AND PLAN SHALL BE MAINTAINED IN FULLY FUNCTIONAL CONDITION UNTIL NO LONGER REQUIRED FOR A COMPLETED PHASE OF WORK OR FINAL STABILIZATION OF THE ROADWAY PROJECT. ALL EROSION AND SEDIMENTATION CONTROL MEASURES SHALL BE CHECKED AND ENTERED INTO INSPECTION RECORD LOG BY A QUALIFIED PERSON AT LEAST ONCE EVERY SEVEN (7) CALENDAR DAYS AND WITHIN 24 HOURS OF THE END OF A 0.5" RAINFALL EVENT, AND CLEANED AND REPAIRED IN ACCORDANCE WITH THE FOLLOWING:

1. INLET PROTECTION DEVICES AND BARRIERS SHALL BE REPAIRED OR REPLACED IF THEY SHOW SIGNS OF UNDERMINING, OR DETERIORATION.
2. ALL SEEDED AREAS SHALL BE CHECKED REGULARLY TO SEE THAT A GOOD STAND IS ACHIEVED AND MAINTAINED. AREAS SHOULD BE FERTILIZED, WATERED, MULCHED AND RESEEDED AS NEEDED.
3. SILT FENCES SHALL BE REPAIRED TO THEIR ORIGINAL CONDITIONS IF DAMAGED. SEDIMENT SHALL BE REMOVED FROM THE SILT FENCES WHEN IT REACHES ONE-HALF THE HEIGHT OF THE SILT FENCE.
4. THE CONSTRUCTION AREA ACCESSES SHALL BE MAINTAINED IN A CONDITION WHICH WILL PREVENT TRACKING OR FLOW OF MUD ONTO PAVED ROAD SURFACES OR OUTSIDE WORK AREA. THIS MAY REQUIRE PERIODIC ROAD SWEEPING.

SITE LOCATION MAP (N.T.S.)

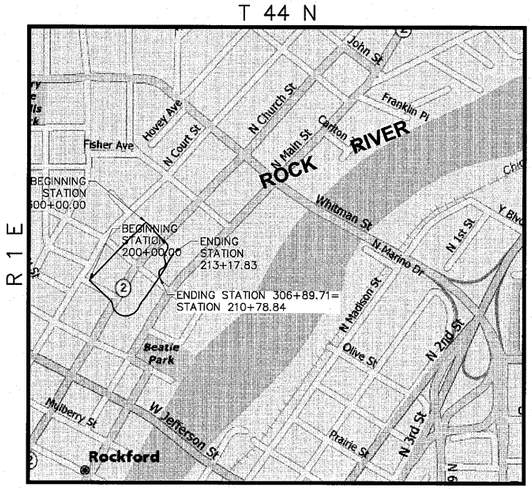

SHEET REVIEW	
AGENCY	DATE

REVISIONS		
NO.	ITEM	DATE

SCALE:	N/A
DRAWN BY:	BCS
CHECKED BY:	JWH
DATE:	AUGUST 13, 2010

McClure Engineering Associates, Inc.
7282 Argus Drive
(815) 398-2332
Rockford, Illinois 61107-5837
FAX (815) 398-2496
Design Firm License: Illinois 184-000816

EROSION AND SEDIMENTATION CONTROL DETAILS

RIVERWALK MUSEUM CAMPUS

711 NORTH MAIN STREET — ROCKFORD, IL

FILE:H:\08-008 RIVERWALK MUSEUM\DESIGN\DRAWINGS\08-008-SWPPP GENERAL NOTES DETAILS.DWGJOB: 04-28-10-008

SHEET NO. 26 OF 148

H:\08-008 RIVERWALK MUSEUM\DESIGN\DRAWINGS\08-008-SWPPP GENERAL NOTES DETAILS.DWG, EROSION AND SEDIMENTATION CONTROL DETAILS, 9/1/2010 2:36:56 PM, I.I. Monty

F.A. RTE.	SECTION	COUNTY	TOTAL SHEETS	SHEET NO.
	06-00543-00-BT	WINNEBAGO	148	27
FED. ROAD DIST. NO.		ILLINOIS	CONTRACT NO.	85521

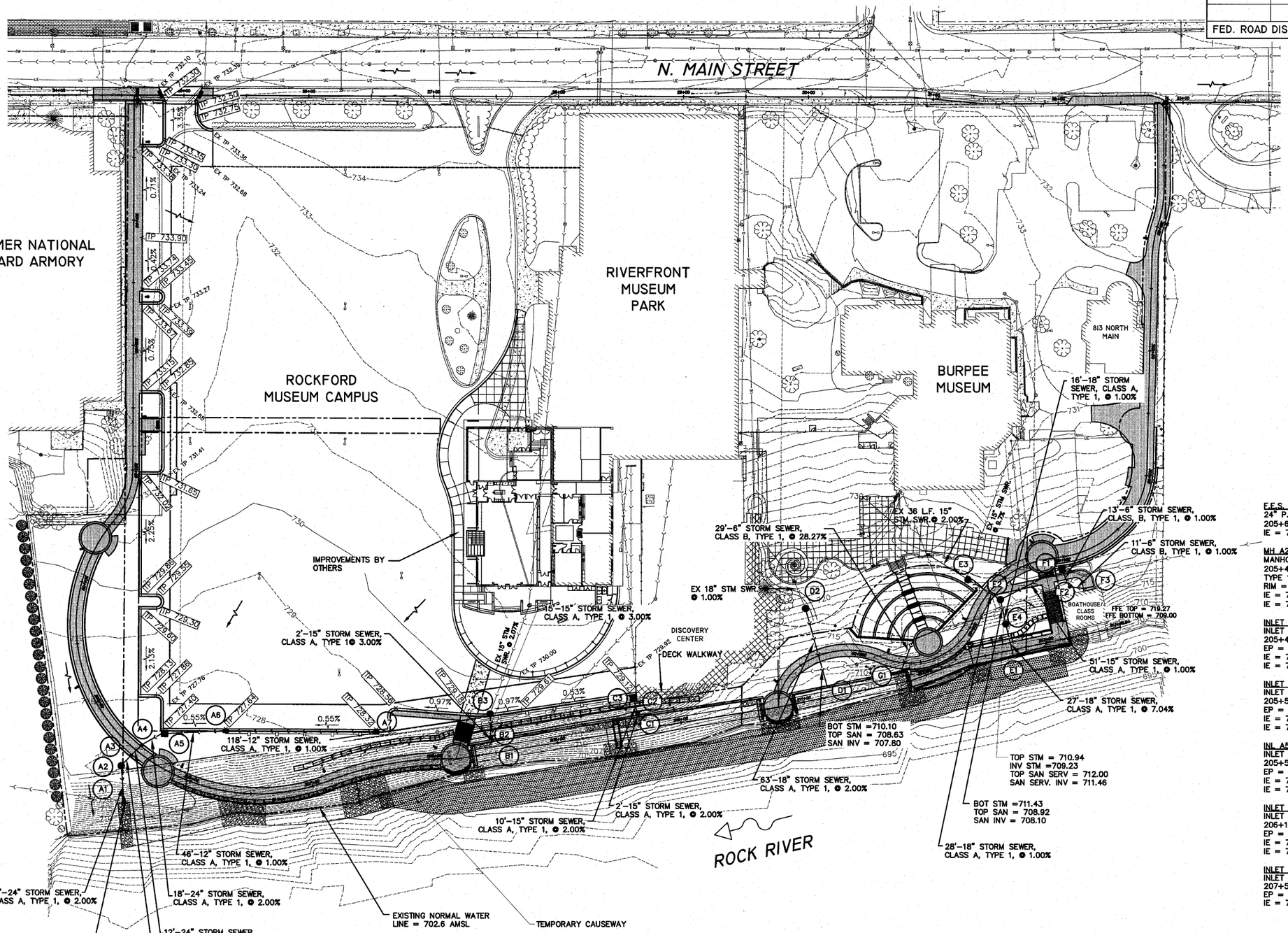

Call Before You Dig
JULIE ILLINOIS ONE CALL SYSTEM
1-800-892-0123
TOLL FREE

SCALES:
PLAN: 1"= 40'
0 40 80
Scale in Feet

LEGEND

×TP 000.00	TOP OF PAVEMENT ELEVATION
×EX 000.00	EXISTING SPOT ELEVATION
915	PROPOSED CONTOUR
915	EXISTING CONTOUR MAJOR
901	EXISTING CONTOUR MINOR
2.00%	DIRECTION OF SHEET FLOW
	PROPOSED STORM SEWER
	EXISTING STORM SEWER
	PROPOSED INLET 700
	PROPOSED INLET SPECIAL
	PROPOSED MANHOLE
E1	STRUCTURE IDENTIFICATION NUMBER
TC	TOP OF CURB
IE	INVERT ELEVATION
EP	EDGE OF PAVEMENT
V.I.F.	VERIFY IN FIELD

F.E.S. A1
24" P.R.C.F.E.S.
205+65.6, 40.3' RT
IE = 717.04

MH A2
MANHOLE TYPE A, 4' DIA.
205+48.8, 17.1' RT.
TYPE 1 F&G
RIM = 726.41
IE = 719.76 (N) IN
IE = 717.76 (E) OUT

INLET SPECIAL No.1 A3
INLET TYPE 700
205+49.6, 7.0' RT
EP = 725.20 TC=725.61
IE = 720.06 (N) IN
IE = 719.96 OUT

INLET SPECIAL No.1 A4
INLET TYPE 700
205+51.1, 7.0' LT
EP = 725.00 TC=725.41
IE = 720.40 (N) IN
IE = 720.30 OUT

INL A5
INLET SPECIAL No.2
205+59.2, 26.5' LT
EP = 727.40 TC 727.81
IE = 722.76 (N) IN
IE = 720.76 OUT

INLET SPECIAL No.1 A6
INLET TYPE 700
206+18.5, 45.7' LT
EP = 727.64 TC=728.05
IE = 723.32 (N) IN
IE = 723.22 OUT

INLET SPECIAL No.1 A7
INLET TYPE 700
207+58.4, 25.8 LT
EP = 728.32 TC=728.73
IE = 724.50 OUT

* ANTI-SEEP COLLAR REQUIRED

* END OF PIPE G1
6" PIPE WALL OPENING
211+79.9, 7.5' LT
IE = 706.00

* END OF PIPE B1
15" PIPE WALL OPENING
208+47.8, 9.3' LT
IE = 706.66

B2
INLET BOX, SPECIAL, No.1
CENTER AT BACK OF WALL
208+47.8, 10.66' LT.
TC = 719.45
IE = 711.18 (W) IN
IE = 706.78 (E) OUT

EX INL B3
RECONSTRUCT MANHOLE
208+50.2, 31.3' LT
TC = 729.89 EOP 729.48
EX IE (N)=723.48 EX
EX IE (W)=723.58 EX
IE OUT (15",E)=711.63
(NEW CONNECTION)
SUMP = 709.33
EX IE (24",S) = 709.88
(PLUG)
EX IE OUT (36",E)=709.33
(PLUG)

* END OF PIPE C1
15" PIPE WALL OPENING
209+66.8, 10.2' LT
IE = 706.98

C2
INLET BOX, SPECIAL, No.1
CENTER AT BACK OF WALL
209+66.8, 11.8' RT.
TC = 719.45
IE = 714.80 (W) IN
IE = 707.02 (E) OUT

INL C3
INLET SPECIAL No.2
W/STEPS
209+65.5, 28.5 LT
EP = 729.12 TC 729.52
I.E. = 715.00 OUT

* END OF PIPE D1
18" PIPE WALL OPENING
211+20.6, 7.5' LT
IE = 709.79

MH D2
RESTRICTED DEPTH
MANHOLE, 4' DIA.
TYPE 1 F&C.L.
306+30.9, 32.9' RT
RIM = 719.53
IE = 713.64 (W) IN
IE = 711.05 (E) OUT

* END OF PIPE E1
18" PIPE WALL OPENING
212+72.0, 5.8' LT
IE = 702.15

MH E2
MANHOLE TYPE A, 4' DIA.
TYPE 1 F&G CLOSED LID
304+66.3, 10.7' LT
RIM = 720.25
IE = 715.67 (N) IN
IE = 711.79 (SW) IN
IE = 711.69 (E) OUT

EX MH E3
EXISTING V.I.F.
MANHOLE TYPE A, 4' DIA.
TYPE 1 F&G CLOSED LID
304+70.0, 19.5' RT
RIM = 721.47 (EX)
IE = 715.42 (EX 15"SW) IN
IE = 712.13 (EX 15" W) IN
IE = 712.07 (E) OUT
(NEW CONNECTION)
IE (EX 15") = 712.03
(PLUG)

MH E4
MANHOLE TYPE A, 4' DIA.
212+71.4, 21.6' LT.
TYPE 1 F&G
RIM = 718.10
IE = 711.53 (W) IN
IE = 704.05 (E) OUT

INL F1
INLET SPECIAL NO. 2
304+02.3, 7.0' LT
EP = 721.98 TC 722.38
IE = 716.30 (E) IN
IE = 716.18 OUT

INL F2
INLET TYPE A, WITH
TYPE 8 GRATE
303+98.8, 24.6' LT
RIM = 718.23
IE = 716.53 IN
IE = 716.43 OUT

INL F3
TRENCH DRAIN
MODEL:ACO DRAIN
KO30-OUTLET B
GRATE-SLOTTED COMP.
RIM = 719.15
IE =716.50

SHEET REVIEW	
AGENCY	DATE

REVISIONS		
NO.	ITEM	DATE

SCALE:	Hor. 1"=20'
DRAWN BY:	BCS
CHECKED BY:	JWH
DATE:	AUGUST 13, 2010

McClure Engineering Associates, Inc.
7282 Argus Drive
(815) 398-2332
Rockford, Illinois 61107-5837
FAX (815) 398-2496
Design Firm License: Illinois 184-000816

OVERALL DRAINAGE PLAN

RIVERWALK MUSEUM CAMPUS

711 NORTH MAIN STREET — ROCKFORD, IL

FILE:H:\08-008 RIVERWALK MUSEUM\DESIGN\DRAWINGS\08-008 GRADING PLAN.DWG — JOB:04-28-10-008

F.A. RTE.	SECTION	COUNTY	TOTAL SHEETS	SHEET NO.
	06-00543-00-BT	WINNEBAGO	148	28
FED. ROAD DIST. NO.		ILLINOIS	CONTRACT NO.	85521

EASEMENT

PART OF THE NORTH HALF OF SECTION 23, TOWNSHIP 44 NORTH, RANGE 1 EAST OF THE THIRD PRINCIPAL MERIDIAN, WINNEBAGO COUNTY, ILLINOIS

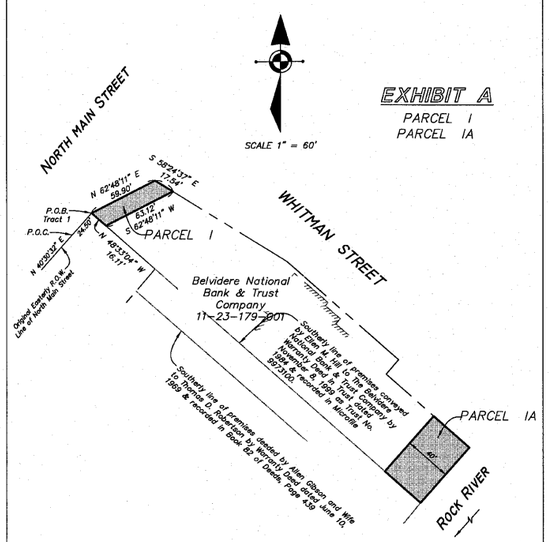

REVISED 5-27-10

McClure Engineering Associates, Inc. — 7282 Argus Drive, Rockford, Illinois 61107-5837, (815) 398-2332, FAX (815) 398-2496. Design Firm License Illinois 184-000816. Copyright 2009 By McClure Engineering Associates, Inc.

SCALE:	1"=0'
DRAWN BY:	RGT
CHECKED BY:	JMH
DATE:	February 12, 2009

EASEMENT FOR RIVERWALK MUSEUM
CITY OF ROCKFORD
311 NORTH MAIN STREET — ROCKFORD, ILLINOIS
FILE:H:\08-008 RIVERWALK MUSEUM\SURVEYING\DRAWINGS\08-008 EASEMENT BASE.DWG — JOB: 04-28-08-008

EASEMENT

PART OF THE NORTHWEST FRACTIONAL QUARTER OF SECTION 23, TOWNSHIP 44 NORTH, RANGE 1 EAST OF THE THIRD PRINCIPAL MERIDIAN, WINNEBAGO COUNTY, ILLINOIS

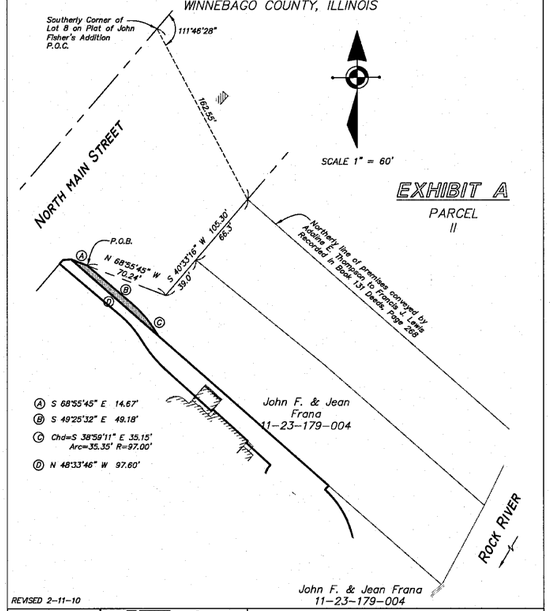

REVISED 2-11-10

McClure Engineering Associates, Inc. — 7282 Argus Drive, Rockford, Illinois 61107-5837, (815) 398-2332, FAX (815) 398-2496. Design Firm License Illinois 184-000816. Copyright 2009 By McClure Engineering Associates, Inc.

SCALE:	1"=0'
DRAWN BY:	RGT
CHECKED BY:	JMH
DATE:	February 12, 2009

EASEMENT FOR RIVERWALK MUSEUM
CITY OF ROCKFORD
315 NORTH MAIN STREET — ROCKFORD, ILLINOIS
FILE:H:\08-008 RIVERWALK MUSEUM\SURVEYING\DRAWINGS\08-008 EASEMENT BASE.DWG — JOB: 04-28-08-008

EASEMENT

PART OF THE NORTHWEST FRACTIONAL QUARTER OF SECTION 23, TOWNSHIP 44 NORTH, RANGE 1 EAST OF THE THIRD PRINCIPAL MERIDIAN, WINNEBAGO COUNTY, ILLINOIS

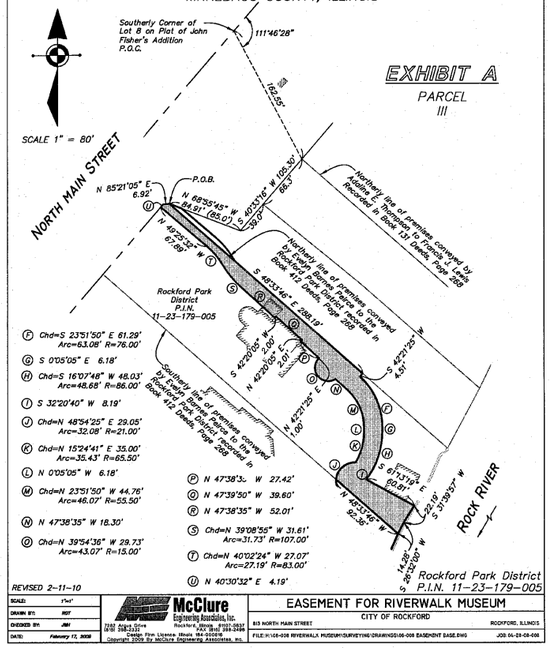

REVISED 2-11-10

McClure Engineering Associates, Inc. — 7282 Argus Drive, Rockford, Illinois 61107-5837, (815) 398-2332, FAX (815) 398-2496. Design Firm License Illinois 184-000816. Copyright 2009 By McClure Engineering Associates, Inc.

SCALE:	1"=0'
DRAWN BY:	RGT
CHECKED BY:	JMH
DATE:	February 12, 2009

EASEMENT FOR RIVERWALK MUSEUM
CITY OF ROCKFORD
313 NORTH MAIN STREET — ROCKFORD, ILLINOIS
FILE:H:\08-008 RIVERWALK MUSEUM\SURVEYING\DRAWINGS\08-008 EASEMENT BASE.DWG — JOB: 04-28-08-008

EASEMENT

PART OF THE NORTHWEST FRACTIONAL QUARTER OF SECTION 23, TOWNSHIP 44 NORTH, RANGE 1 EAST OF THE THIRD PRINCIPAL MERIDIAN, WINNEBAGO COUNTY, ILLINOIS

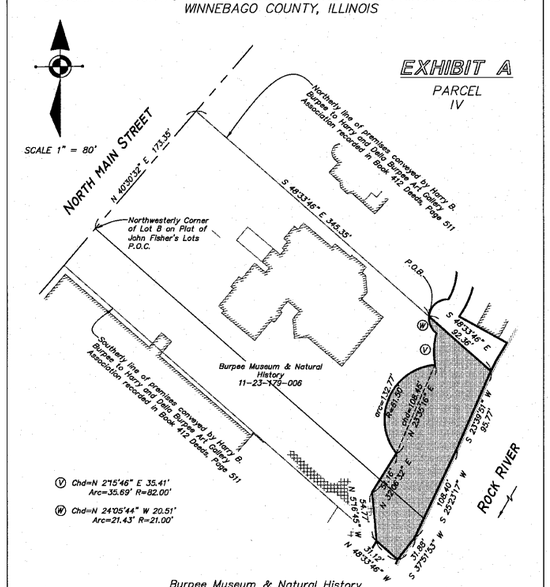

REVISED 2-11-10

McClure Engineering Associates, Inc. — 7282 Argus Drive, Rockford, Illinois 61107-5837, (815) 398-2332, FAX (815) 398-2496. Design Firm License Illinois 184-000816. Copyright 2009 By McClure Engineering Associates, Inc.

SCALE:	1"=0'
DRAWN BY:	RGT
CHECKED BY:	JMH
DATE:	February 12, 2009

EASEMENT FOR RIVERWALK MUSEUM
CITY OF ROCKFORD
737 NORTH MAIN STREET — ROCKFORD, ILLINOIS
FILE:H:\08-008 RIVERWALK MUSEUM\SURVEYING\DRAWINGS\08-008 EASEMENT BASE.DWG — JOB: 04-28-08-008

EASEMENT

PART OF THE NORTHWEST FRACTIONAL QUARTER OF SECTION 23, TOWNSHIP 44 NORTH, RANGE 1 EAST OF THE THIRD PRINCIPAL MERIDIAN, WINNEBAGO COUNTY, ILLINOIS

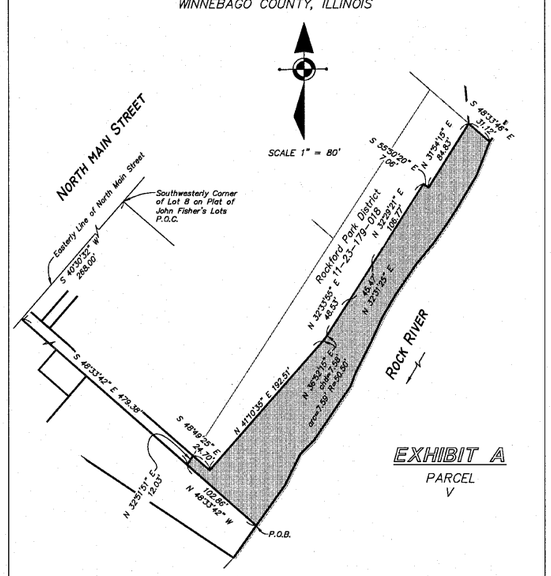

REVISED 2-11-10

McClure Engineering Associates, Inc. — 7282 Argus Drive, Rockford, Illinois 61107-5837, (815) 398-2332, FAX (815) 398-2496. Design Firm License Illinois 184-000816. Copyright 2009 By McClure Engineering Associates, Inc.

SCALE:	1"=0'
DRAWN BY:	RGT
CHECKED BY:	JMH
DATE:	February 12, 2009

EASEMENT FOR RIVERWALK MUSEUM
CITY OF ROCKFORD
715 NORTH MAIN STREET — ROCKFORD, ILLINOIS
FILE:H:\08-008 RIVERWALK MUSEUM\SURVEYING\DRAWINGS\08-008 EASEMENT BASE.DWG — JOB: 04-28-08-008

SHEET REVIEW	
AGENCY	DATE

REVISIONS		
NO.	ITEM	DATE

SCALE:	Varies per Detail
DRAWN BY:	MS
CHECKED BY:	JMH
DATE:	4/16/2010

McClure Engineering Associates, Inc.
7282 Argus Drive, Rockford, Illinois 61107-5837
(815) 398-2332 FAX (815) 398-2496
Design Firm License: Illinois 184-000816

EASEMENTS

RIVERWALK MUSEUM CAMPUS

711 NORTH MAIN STREET — ROCKFORD, IL

FILE:H:\08-008 RIVERWALK MUSEUM\SURVEYING\DRAWINGS\08-008 EASEMENT BASE.DWG — JOB: 04-28-10-008

SHEET NO. 28 OF 148

F.A. RTE.	SECTION	COUNTY	TOTAL SHEETS	SHEET NO.
	06-00543-00-BT	WINNEBAGO	148	29
FED. ROAD DIST. NO.		ILLINOIS	CONTRACT NO.	85521

EASEMENT

PART OF THE NORTHWEST FRACTIONAL QUARTER OF SECTION 23, TOWNSHIP 44 NORTH, RANGE 1 EAST OF THE THIRD PRINCIPAL MERIDIAN, WINNEBAGO COUNTY, ILLINOIS

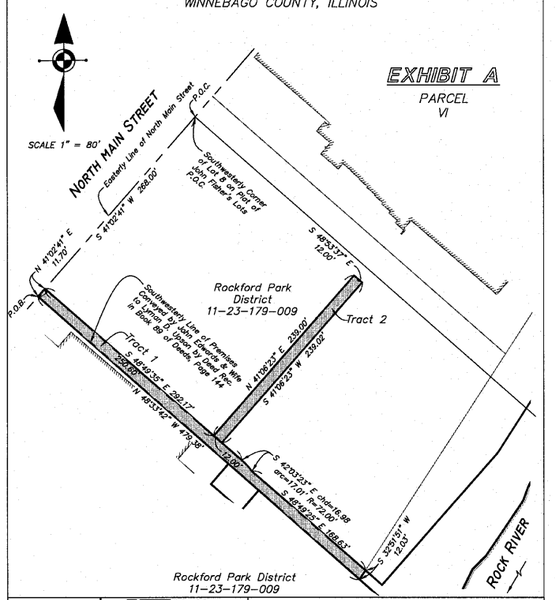

EASEMENT

PART OF THE NORTHWEST FRACTIONAL QUARTER OF SECTION 23, TOWNSHIP 44 NORTH, RANGE 1 EAST OF THE THIRD PRINCIPAL MERIDIAN, WINNEBAGO COUNTY, ILLINOIS

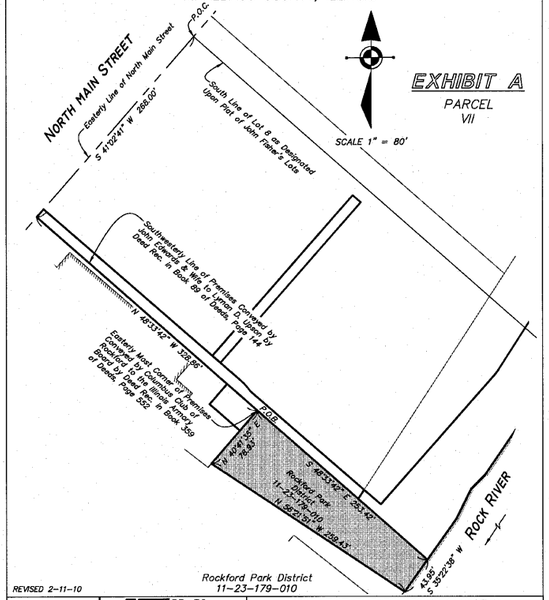

EASEMENT

PART OF THE NORTHWEST FRACTIONAL QUARTER OF SECTION 23, TOWNSHIP 44 NORTH, RANGE 1 EAST OF THE THIRD PRINCIPAL MERIDIAN, WINNEBAGO COUNTY, ILLINOIS

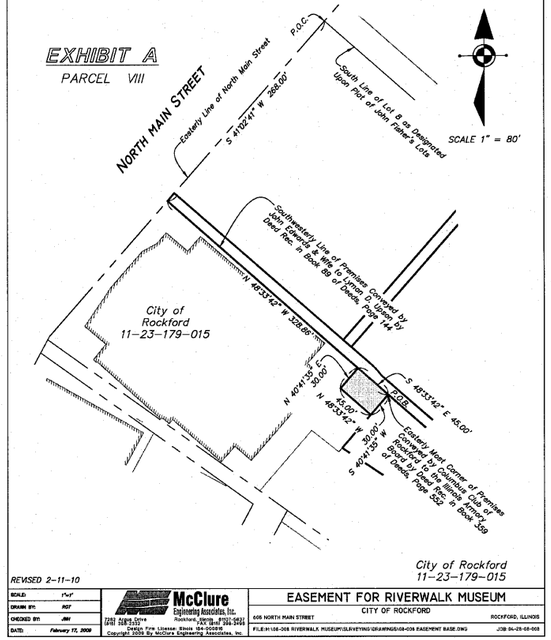

SHEET REVIEW	
AGENCY	DATE

REVISIONS		
NO.	ITEM	DATE

SCALE:	Varies per Detail
DRAWN BY:	MS
CHECKED BY:	JMH
DATE:	4/16/2010

McClure Engineering Associates, Inc.
7282 Argus Drive Rockford, Illinois 61107-5837
(815) 398-2332 FAX (815) 398-2496
Design Firm License: Illinois 184-000816
Copyright 2010 By McClure Engineering Associates, Inc.

EASEMENTS

RIVERWALK MUSEUM CAMPUS

711 NORTH MAIN STREET — ROCKFORD, IL

FILE:H:\08-008 RIVERWALK MUSEUM\SURVEYING\DRAWINGS\08-008 EASEMENT BASE.DWG — JOB:04-28-10-008

SHEET NO. 29 OF 148

F.A. RTE.	SECTION	COUNTY	TOTAL SHEETS	SHEET NO.
	06-00543-00-BT	WINNEBAGO	148	30
FED. ROAD DIST. NO.		ILLINOIS	CONTRACT NO.	85521

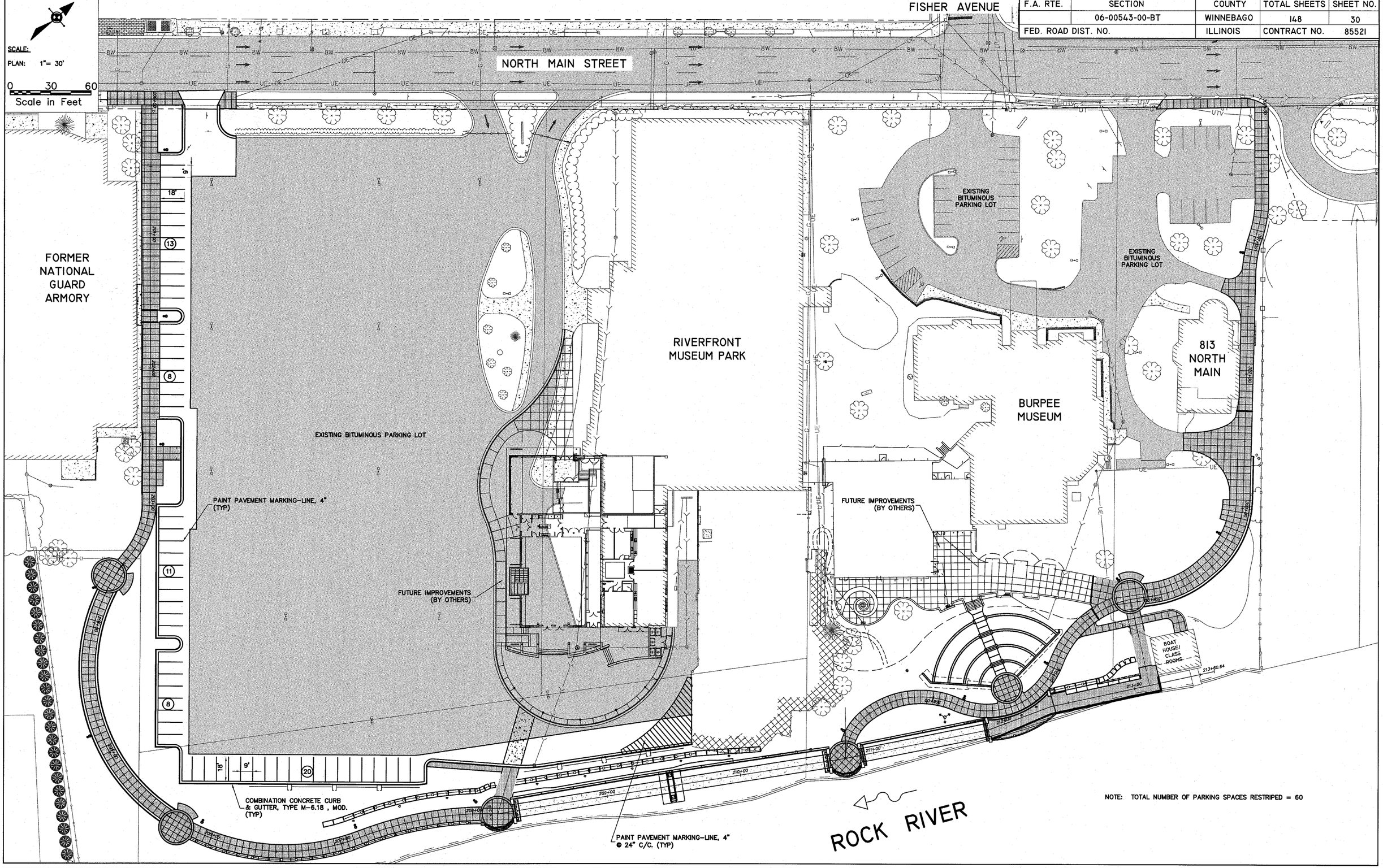

SHEET REVIEW	
AGENCY	DATE

REVISIONS		
NO.	ITEM	DATE

SCALE:	Hor. 1"=30'
DRAWN BY:	MS
CHECKED BY:	JWH
DATE:	AUGUST 13, 2010

McClure Engineering Associates, Inc.
7282 Argus Drive
(815) 398-2332
Rockford, Illinois 61107-5837
FAX (815) 398-2496
Design Firm License: Illinois 184-000816

PAVEMENT MARKING PLAN

RIVERWALK MUSEUM CAMPUS

711 NORTH MAIN STREET — ROCKFORD, IL

FILE: H:\08-008 RIVERWALK MUSEUM\DESIGN\DRAWINGS\08-008 STRIPING PLAN.DWG — JOB: 04-28-10-008

SHEET NO. 30 OF 148

H:\08-008 RIVERWALK MUSEUM\DESIGN\DRAWINGS\08-008 STRIPING PLAN.DWG, STRIPING PLAN, 9/1/2010 2:38:13 PM, Ed, MONTY

F.A. RTE.	SECTION	COUNTY	TOTAL SHEETS	SHEET NO.
	06-00543-00-BT	WINNEBAGO	148	31
FED. ROAD DIST. NO.		ILLINOIS	CONTRACT NO.	

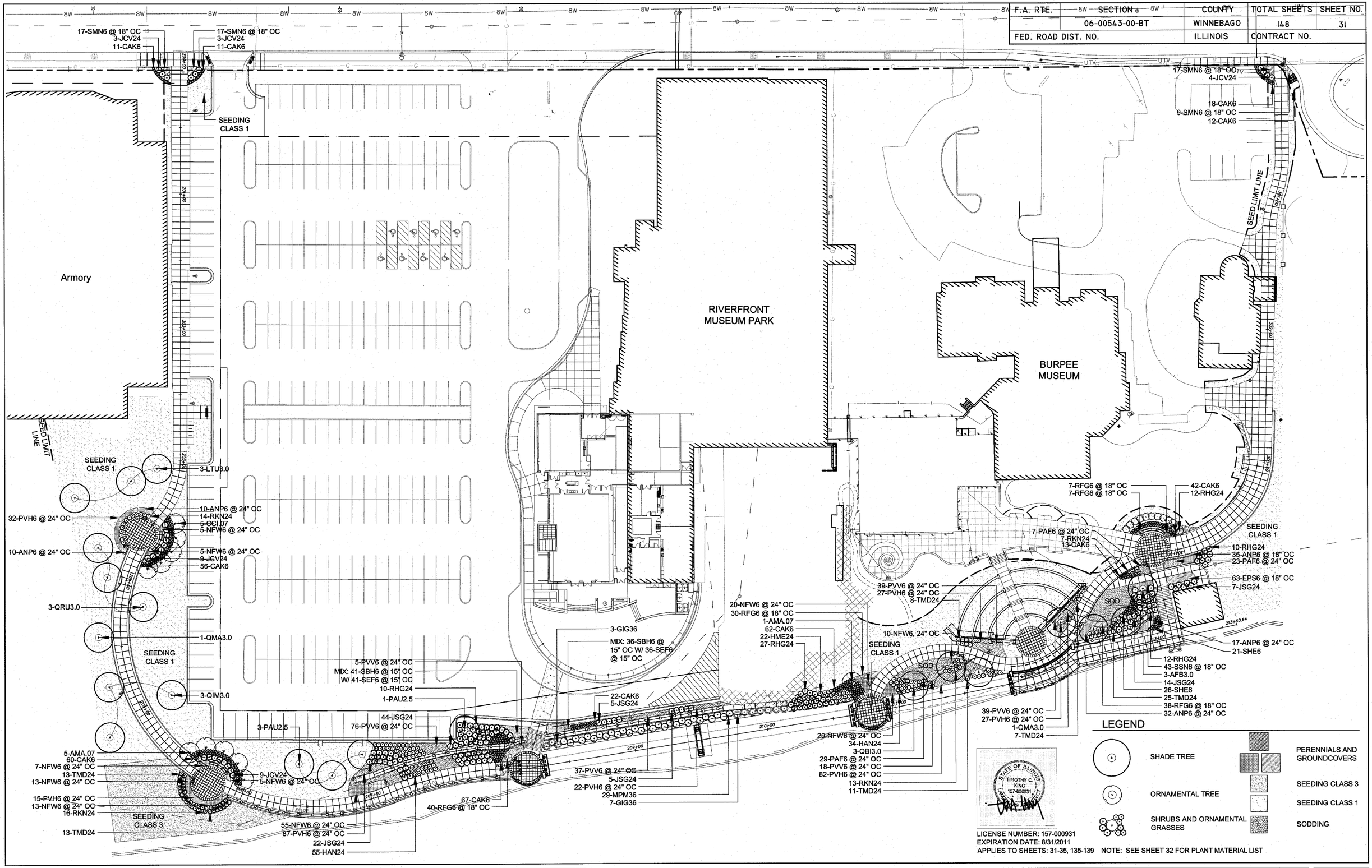

STATE OF ILLINOIS TIMOTHY C. KING 157-000931

LICENSE NUMBER: 157-000931
EXPIRATION DATE: 8/31/2011
APPLIES TO SHEETS: 31-35, 135-139 NOTE: SEE SHEET 32 FOR PLANT MATERIAL LIST

Hitchcock Design Group
Creating Better Places®

221 West Jefferson Avenue
Naperville, Illinois 60540

T 630.961.1787
F 630.961.9925

SHEET REVIEW	
AGENCY	DATE

REVISIONS		
NO.	ITEM	DATE

SCALE:	Hor. 1"=30'
DRAWN BY:	MAF
CHECKED BY:	TCK
DATE:	9/3/2010

McClure Engineering Associates, Inc.
7282 Argus Drive
(815) 398-2332
Rockford, Illinois 61107-5637
FAX (815) 398-2496
Design Firm License: Illinois 184-000816

LANDSCAPE PLAN

RIVERWALK MUSEUM CAMPUS

711 NORTH MAIN STREET — ROCKFORD, IL

FILE: — JOB: 04-28-10-008

SHEET NO. 31 OF 148

F.A. RTE.	SECTION	COUNTY	TOTAL SHEETS	SHEET NO.
	06-00543-00-BT	WINNEBAGO	148	32
FED. ROAD DIST. NO.		ILLINOIS	CONTRACT NO.	

PLANT MATERIAL LIST

Code	Botanical Name	Common Name	Size	Qty
Shade Trees				
AFB3.0	Acer x freemanii 'Autumn Blaze'	Autumn Blaze Freeman Maple	3" C	3
LTU3.0	Liriodendron tulipifera	Tuliptree	3" C	3
PAU2.5	Platanus x acerifolia 'Bloodgood'	Bloodgood London Planetree	2.5" C	4
QBI3.0	Quercus bicolor	Swamp White Oak	3" C	3
QIM3.0	Quercus imbricaria	Shingle Oak	3" C	3
QMA3.0	Quercus macrocarpa	Bur Oak	3" C	2
QRU3.0	Quercus rubra	Red Oak	3" C	3
Intermediate Trees				
AMA.07	Amelanchier x grandiflora 'Autumn Brilliance'	Autumn Brilliance Serviceberry	7' HT	6
CCI.07	Crataegus crusgalli var. inermis	Thornless Cockspur Hawthorn	7' HT	5
Deciduous Shrubs				
HAN24	Hydrangea arbor. 'Annabelle'	Annabelle Smooth Hydrangea	24" HT	89
HME24	Hydrangea macrophylla 'Endless Summer'	Endless Summer Bigleaf Hydrangea	24" HT	22
MPM36	Myrica pensylvanica	Bayberry	36" HT	29
RHG24	Rhus aromatica 'Gro-Low'	Gro-Low Fragrant Sumac	24" W	71
RKN24	Rosa 'Knockout'	Knockout Rose	24" HT	50
Evergreen Shrubs				
JSG24	Juniperus chinensis 'Sea Green'	Sea Green Chinese Juniper	24" W	97
JCV24	Juniperus chinensis 'var. sargentii Viridis'	Green Sargent Juniper	24" W	28
TMD24	Taxus x media 'Densiformis'	Dense Anglojap Yew	24" W	77
Perennials				
ANP6	Aster novae angliae 'Purple Dome'	Purple Dome New Enlgand Aster	1 GAL	104
CAK6	Calamagrostis x acutiflora 'Karl Foerster'	Karl Foerster Feather Reed Grass	1 GAL	374
EPS6	Echinacea purpurea 'White Swan'	White Swan Coneflower	1 GAL	63
GIG6	Miscanthus giganteus	Giant Silver Grass	1 GAL	10
NFW6	Nepeta x faassenii 'Walker's Low'	Walker's Low Catmint	1 GAL	153
PVH6	Panicum virgatum 'Heavy Metal'	Heavy Metal Switch Grass	1 GAL	292
PAF6	Perovskia atriplicifolia 'Filigran'	Cutleaf Russian Sage	1 GAL	59
PVV6	Physostegia virginiana 'Vivid'	Vivid Obedient Plant	1 GAL	214
RFG6	Rudbeckia fulgida 'Goldsturm'	Goldsturm Black-eyed Susan	1 GAL	122
SBH6	Salvia x sylvestris 'Blue Hill'	Blue Hill Salvia	1 GAL	77
SMN6	Salvia x sylvestris 'Mainacht'	May Night Salvia	1 GAL	60
SEF6	Salvia x sylvestris 'Ostfriesland'	East Friesland Salvia	1 GAL	77
SSN6	Sedum spectabile 'Neon'	Neon Stonecrop^	1 GAL	43
SHE6	Sporobolus heterolepis "	Prairie Dropseed	1 GAL	47
	Total quantity for pay Item PERENNIAL PLANT ORNAMENTAL TYPE GALLON POT:		UNIT	16.95
		(Unit = 100 Plants)		

PLANTING GENERAL NOTES

1. SEED LIMIT LINE IS APPROXIMATE. SEED TO LIMITS OF GRADING AND DISTURBANCE.
2. CONTRACTOR RESPONSIBLE FOR EROSION CONTROL IN ALL DISTURBED AREAS.
3. TREE MULCH RINGS ARE 5' DIAMETER, TYP.
4. ALL PERENNIALS TO BE PAID FOR AS K0012990 PERENNIAL PLANT ORNAMENTAL TYPE GALLON POT.
5. PROVIDE TOPSOIL FOR ALL SEED AND SOD AREAS TO A 6 INCH MINIMUM DEPTH. PROVIDE TOPSOIL FOR ALL PLANTING BED AREAS TO AN 18 INCH MINIMUM DEPTH. AMEND TOPSOIL WITH SOIL CONDITIONER FOR ALL PLANTING BED AREAS AS SPECIFIED. REFER TO SPECIAL PROVISIONS FOR ADDITIONAL INFORMATION.
6. PLANT SPACING PROVIDED FOR REFERENCE ONLY. PROVIDE THE NUMBER OF PLANTS INDICATED AND SPACE EVENLY THROUGHOUT THE PLANTING BED AREA.
7. MULCH FOR PLANTS SHALL CONSIST OF SIX-MONTH OLD, WELL ROTTED, SHREDDED, NATIVE HARDWOOD BARK MULCH, 3" DEPTH, FREE OF WOOD CHIPS AND SAWDUST. REFER TO SPECIAL PROVISIONS FOR ADDITIONAL INFORMATION.

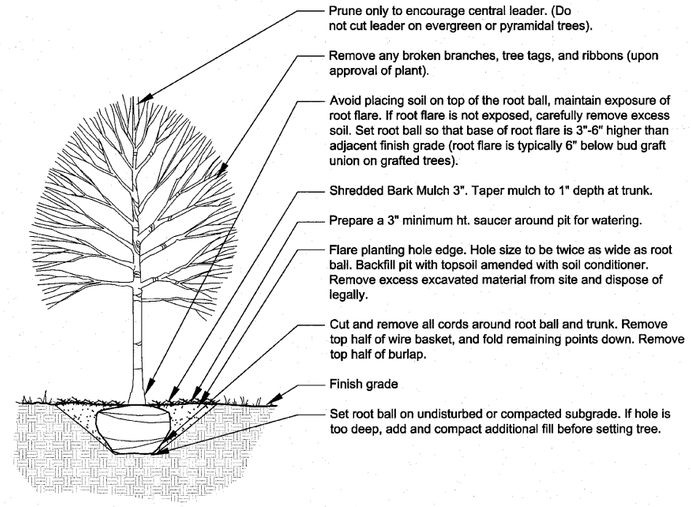

1 Deciduous Tree Planting — d-tree-dec — 1/2" = 1'-0"

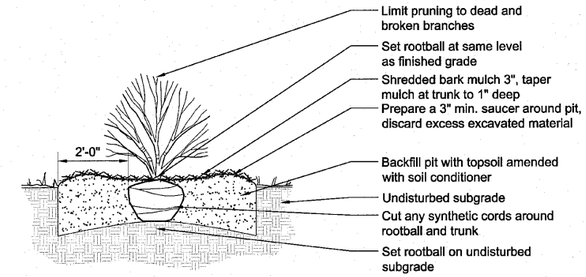

3 Shrub Planting — d-shrub — 1/2" = 1'-0"

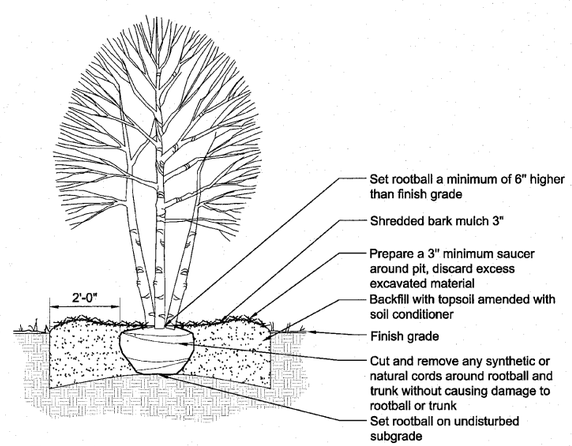

2 Ornamental Tree Planting — d-ornamental tree — 1/2" = 1'-0"

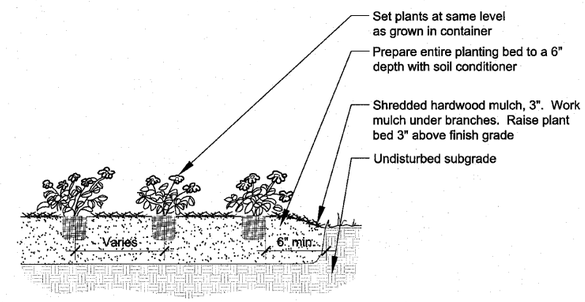

4 Perennial Planting — d-annual-perennial — 1/2" = 1'-0"

Hitchcock Design Group
Creating Better Places®
221 West Jefferson Avenue
Naperville, Illinois 60540
T 630.961.1787
F 630.961.9925

SHEET REVIEW	
AGENCY	DATE

REVISIONS		
NO.	ITEM	DATE

SCALE:	
DRAWN BY:	MAF
CHECKED BY:	TCK
DATE:	9/3/2010

McClure Engineering Associates, Inc.
7282 Argus Drive, Rockford, Illinois 61107-5837
(815) 398-2332 FAX (815) 398-2496
Design Firm License: Illinois 184-000816

LANDSCAPE PLAN
RIVERWALK MUSEUM CAMPUS
711 NORTH MAIN STREET — ROCKFORD, IL
FILE: — JOB: 04-28-10-008

F.A. RTE.	SECTION	COUNTY	TOTAL SHEETS	SHEET NO.
	06-00543-00-BT	WINNEBAGO	148	33
FED. ROAD DIST. NO.		ILLINOIS	CONTRACT NO.	

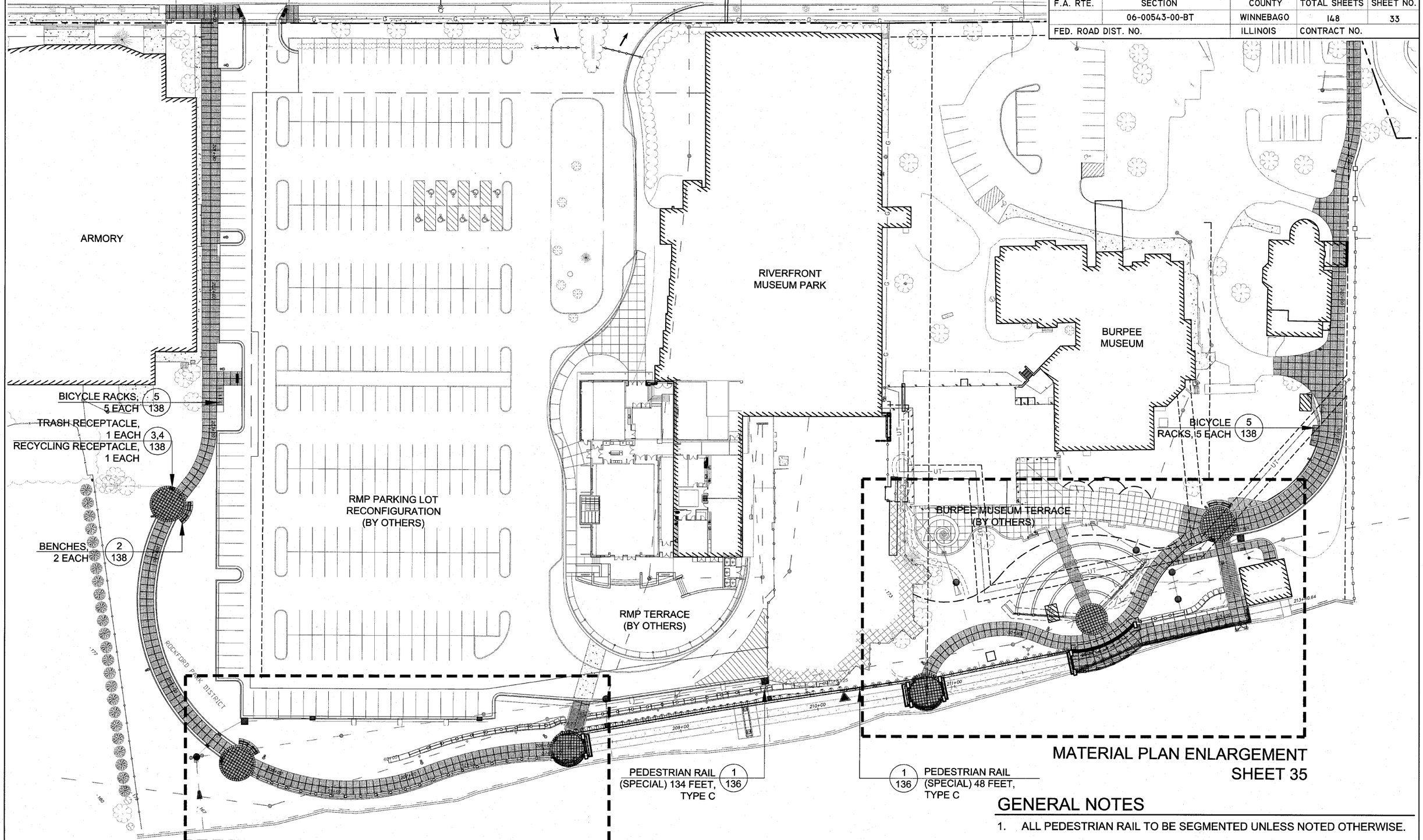

GENERAL NOTES

1. ALL PEDESTRIAN RAIL TO BE SEGMENTED UNLESS NOTED OTHERWISE.
2. ▲- INDICATES STEP IN RAILING THAT COORESPONDS WITH STEP IN THE WALL. SEE PEDESTRIAN RAIL DETAIL 3 ON SHEET 122 AND CIVIL DWGS FOR MORE INFORMATION.

Hitchcock Design Group
Creating Better Places®
221 West Jefferson Avenue
Naperville, Illinois 60540
T 630.961.1787
F 630.961.9925

SHEET REVIEW	
AGENCY	DATE

REVISIONS		
NO.	ITEM	DATE

SCALE:	Hor. 1"=30'
DRAWN BY:	MAF
CHECKED BY:	TCK
DATE:	9/3/2010

McClure Engineering Associates, Inc.
7282 Argus Drive
(815) 398-2332
Rockford, Illinois 61107-5837
FAX (815) 398-2496
Design Firm License: Illinois 184-000816

MATERIAL CALLOUT PLAN

RIVERWALK MUSEUM CAMPUS

711 NORTH MAIN STREET — ROCKFORD, IL

FILE: — JOB: 04-28-10-008

F.A. RTE.	SECTION	COUNTY	TOTAL SHEETS	SHEET NO.
	06-00543-00-BT	WINNEBAGO	148	34
FED. ROAD DIST. NO.		ILLINOIS	CONTRACT NO.	

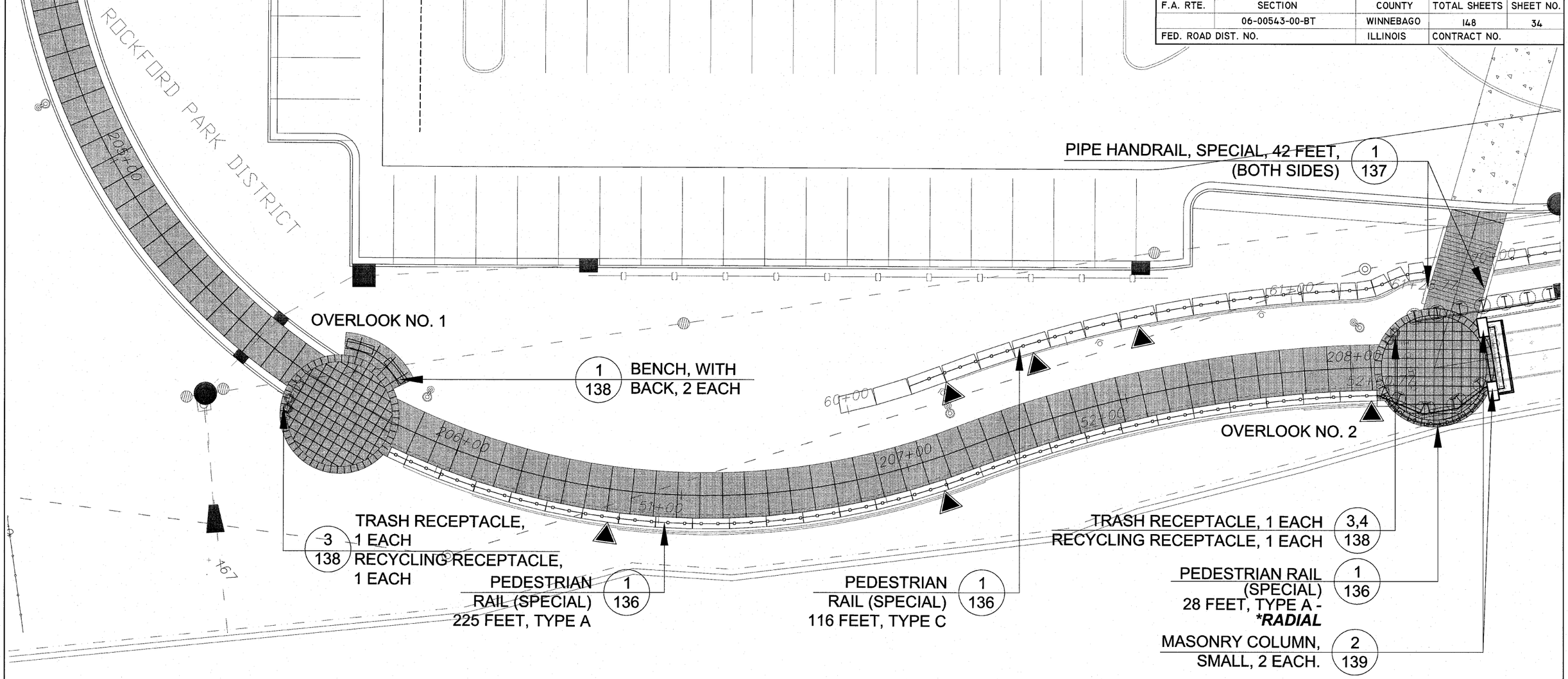

GENERAL NOTES

1. ALL PEDESTRIAN RAIL TO BE SEGMENTED UNLESS NOTED OTHERWISE.
2. ▲- INDICATES STEP IN RAILING THAT COORESPONDS WITH STEP IN THE WALL. SEE PEDESTRIAN RAIL DETAIL 3 ON SHEET 122 AND CIVIL DWGS FOR MORE INFORMATION.

Hitchcock Design Group
Creating Better Places®
221 West Jefferson Avenue
Naperville, Illinois 60540
T 630.961.1787
F 630.961.9925

SHEET REVIEW	
AGENCY	DATE

REVISIONS		
NO.	ITEM	DATE

SCALE:	Hor. 1"=10'
DRAWN BY:	MAF
CHECKED BY:	TCK
DATE:	9/3/2010

McClure Engineering Associates, Inc.
7282 Argus Drive (815) 398-2332
Rockford, Illinois 61107-5837 FAX (815) 398-2496
Design Firm License: Illinois 184-000816

MATERIAL CALLOUT PLAN ENLARGEMENT

RIVERWALK MUSEUM CAMPUS

711 NORTH MAIN STREET — ROCKFORD, IL

FILE: — JOB: 04-28-10-008

F.A. RTE.	SECTION	COUNTY	TOTAL SHEETS	SHEET NO.
	06-00543-00-BT	WINNEBAGO	148	35
FED. ROAD DIST. NO.		ILLINOIS	CONTRACT NO.	

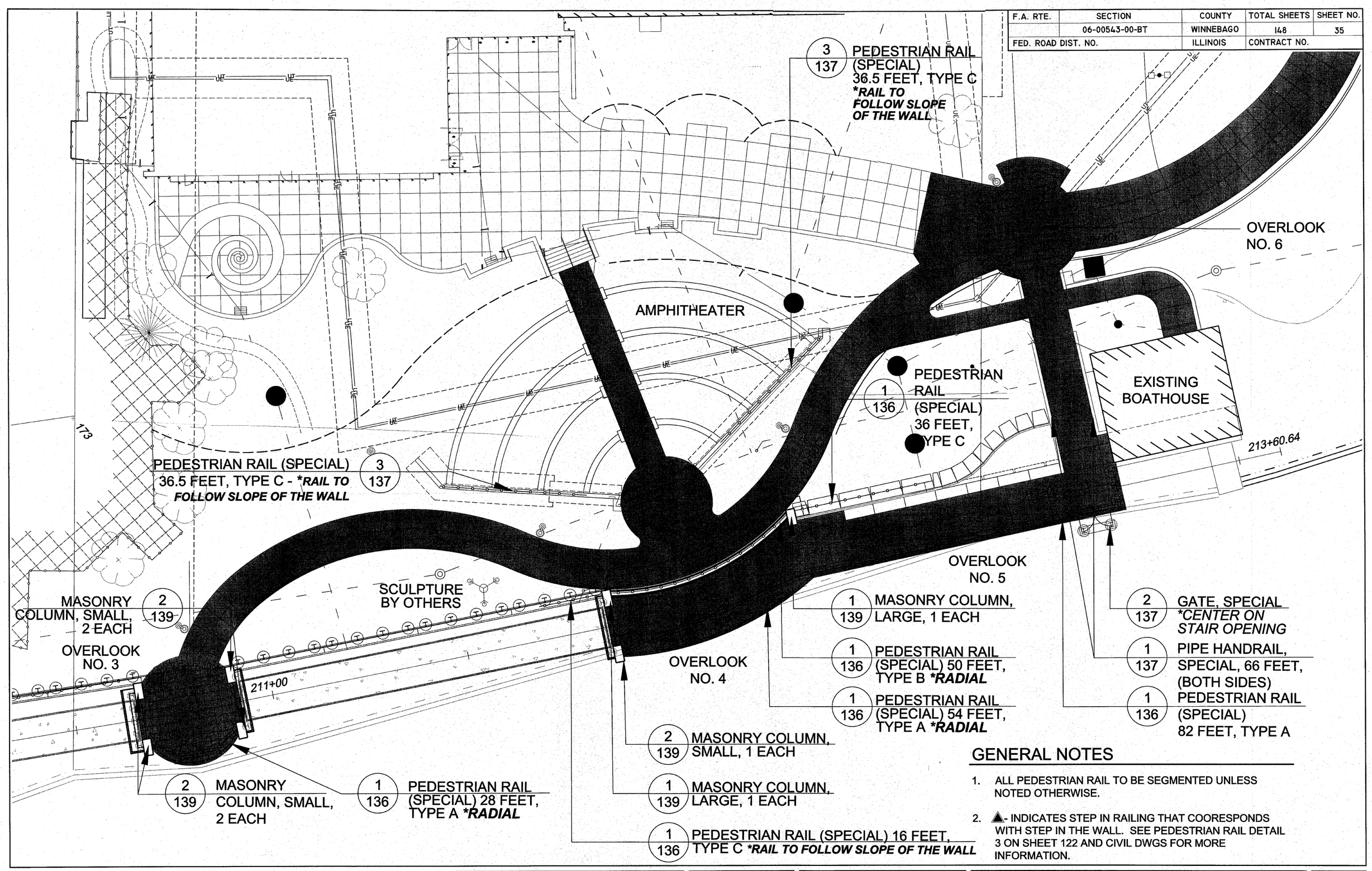

GENERAL NOTES

1. ALL PEDESTRIAN RAIL TO BE SEGMENTED UNLESS NOTED OTHERWISE.
2. ▲- INDICATES STEP IN RAILING THAT COORESPONDS WITH STEP IN THE WALL. SEE PEDESTRIAN RAIL DETAIL 3 ON SHEET 122 AND CIVIL DWGS FOR MORE INFORMATION.

Hitchcock Design Group
Creating Better Places®
221 West Jefferson Avenue
Naperville, Illinois 60540
T 630.961.1787
F 630.961.9925

SHEET REVIEW	
AGENCY	DATE

REVISIONS		
NO.	ITEM	DATE

SCALE:	Hor. 1"=10'
DRAWN BY:	MAF
CHECKED BY:	TCK
DATE:	9/3/2010

McClure Engineering Associates, Inc.
7282 Argus Drive (815) 398-2332
Rockford, Illinois 61107-5837 FAX (815) 398-2496
Design Firm License: Illinois 184-000816

MATERIAL CALLOUT PLAN ENLARGEMENT

RIVERWALK MUSEUM CAMPUS

711 NORTH MAIN STREET — ROCKFORD, IL

FILE: — JOB: 04-28-10-008

F.A. RTE.	SECTION	COUNTY	TOTAL SHEETS	SHEET NO.
	06-00543-00-BT	WINNEBAGO	148	36
FED. ROAD DIST. NO.		ILLINOIS	CONTRACT NO.	

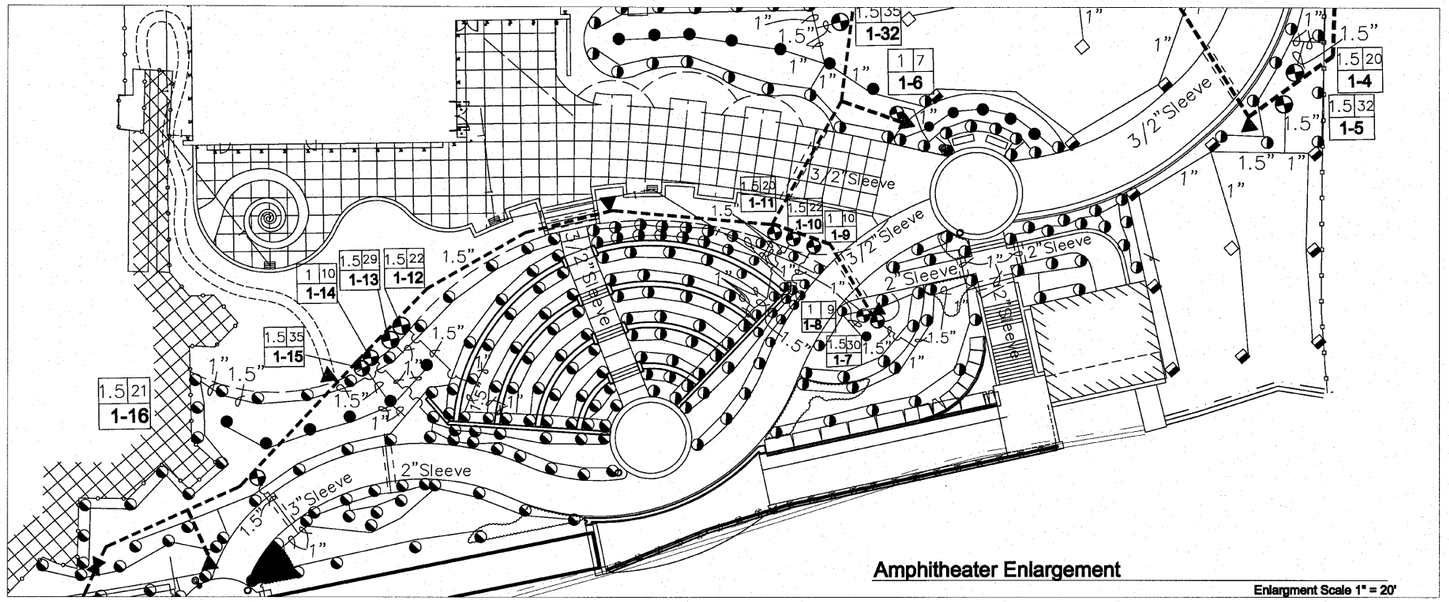

Amphitheater Enlargement

Enlargment Scale 1" = 20'

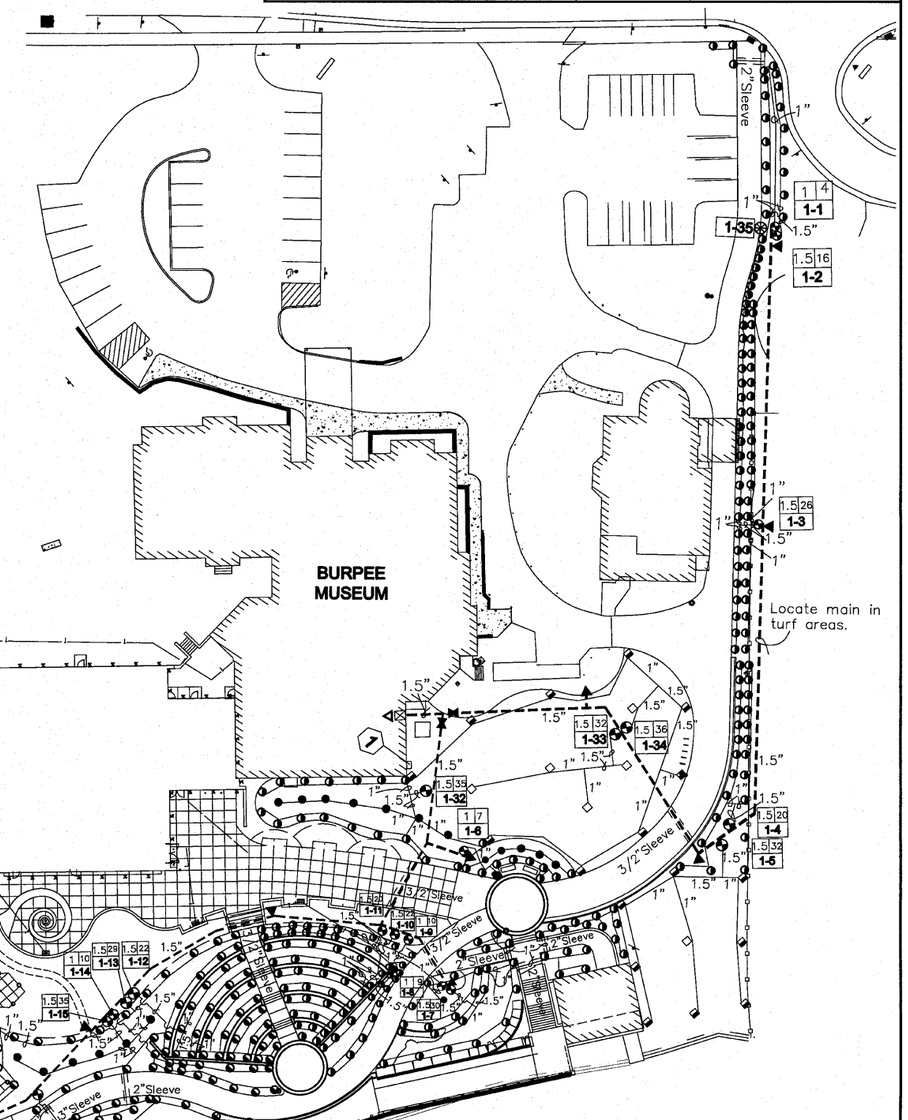

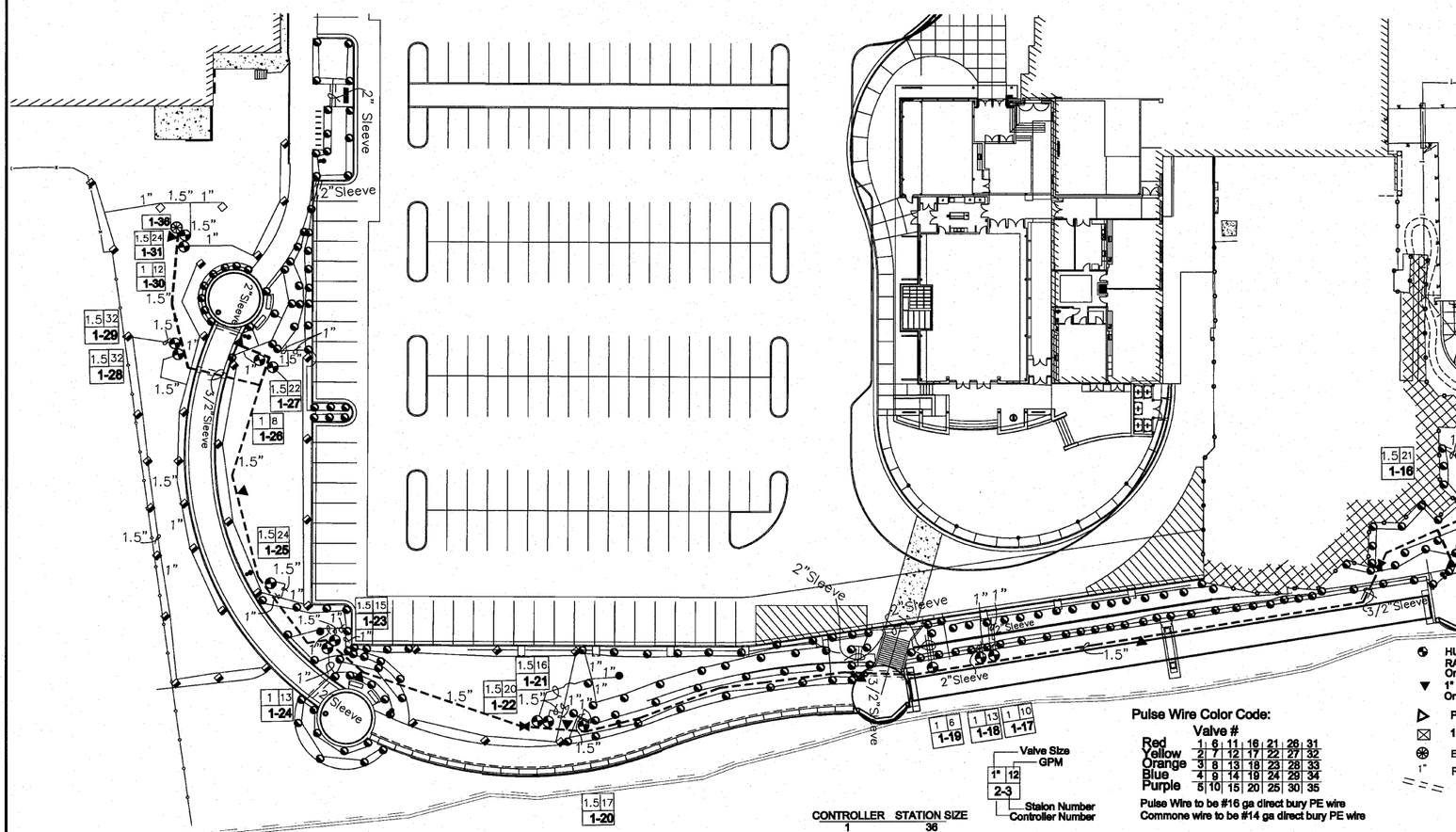

CONTROLLER STATION SIZE
1 36

Valve Size
GPM
1" 12
2-3
Staion Number
Controller Number

Pulse Wire Color Code:

	Valve #						
Red	1	6	11	16	21	26	31
Yellow	2	7	12	17	22	27	32
Orange	3	8	13	18	23	28	33
Blue	4	9	14	19	24	29	34
Purple	5	10	15	20	25	30	35

Pulse Wire to be #16 ga direct bury PE wire
Commone wire to be #14 ga direct bury PE wire

KEY:

- HUNTER INSTITUTIONAL SPRAYHEAD Part Circle - SPRAY NOZZLES VARY
  RAIN BIRD 1800 PRS-SAM SERIES SPRAY HEAD Part Cirlce - SPRAY NOZZLES VARY
  Or Approved eqaul, use 4" heads in turf and 12" heads in plantings
- HUNTER INSTITUTIONAL SPRAYHEAD Full Circle - SPRAY NOZZLES VARY
  RAIN BIRD 1800 PRS-SAM SERIES SPRAY HEAD Full Cirlce - SPRAY NOZZLES VARY
  Or Approved eqaul, use 4" heads in turf and 12" heads in plantings
- HUNTER 4" I-20 ROTOR Full Circle - NOZZLES VARY, use Ultra Blue nozzles
  RAIN BIRD 4" 5000 PLUS SERIES Full Circle - Use Rain Curtain Nozzles, NOZZLES VARY
  Or Approved equal
- HUNTER 4" I-20 ROTOR Part Circle - NOZZLES VARY, use Ultra Blue nozzles
  RAIN BIRD 4" 5000 PLUS SERIES Part Circle - Use Rain Curtain Nozzles, NOZZLES VARY
  Or Approved equal
- CL 160 PVC PIPE - Mainline
- 1" & 1.5" PE PIPE - Lateral
- HUNTER I-CORE CONTROLLER or Approved Equal
  36 STATION CONTROLLER - Metal Cabinet.
  Mount on Exterior of Burpee Building.
  Contractor responsible for providing power from tap area to controller
  Provide (1) HUNTER ICR or approved equal receiver and remote.
  Provide Hunter Rain Clik Monitoring System or approved equal
  Coordinate with site engineer for mounting
- HUNTER 1" & 1.5" PGV ELECTRIC VALVES- Sizes vary.
  RAIN BIRD PGA 1" & 1.5" ELECTRIC VALVES - Sizes vary.
  Or Approved Equal
- 1" Hunter HQ-44 Quick Coupler Valve
  Or Approved Equal
- Point of Connection - Backflow and meter provided by others
- 1" Blow out tap
- Extra wire drop - locate in valve box and label
- 1" Pipe size
- PVC Class 160 Sleeve - Size per plan
  4"/2" Sleeve
  Wire Sleeve Size
  Pipe Sleeve Size

Hitchcock Design Group
Creating Better Places®

221 West Jefferson Avenue
Naperville, Illinois 60540

T 630.961.1787
F 630.961.9925

SHEET REVIEW	
AGENCY	DATE

REVISIONS		
NO.	ITEM	DATE

SCALE:	Hor. 1"=30'
DRAWN BY:	DPF
CHECKED BY:	DPF
DATE:	9/3/2010

McClure Engineering Associates, Inc.
7282 Argus Drive Rockford, Illinois 61107-5837
(815) 398-2332 FAX (815) 398-2496
Design Firm License: Illinois 184-000816

IRRIGATION PLAN

RIVERWALK MUSEUM CAMPUS

711 NORTH MAIN STREET — ROCKFORD, IL

FILE: — JOB: 04-28-10-008

SHEET NO. 36 OF 148

F.A. RTE.	SECTION	COUNTY	TOTAL SHEETS	SHEET NO.
	06-00543-00-BT	WINNEBAGO	148	37
FED. ROAD DIST. NO.		ILLINOIS	CONTRACT NO.	

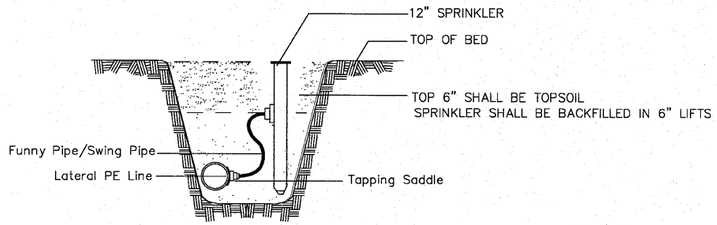

Contractor may use pre-manufactured swing joints in place of flex piping

1 SPRINKLER HEAD

NO SCALE

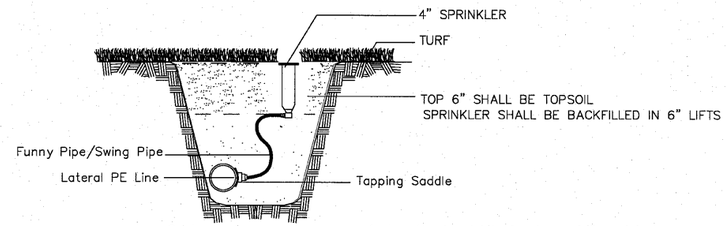

Contractor may use pre-manufactured swing joints in place of flex piping

2 SPRINKLER HEAD

NO SCALE

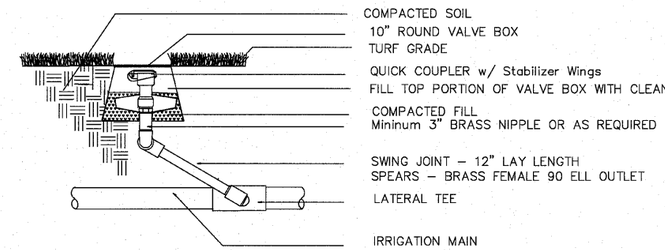

3 QUICK COUPLER VALVE

NO SCALE

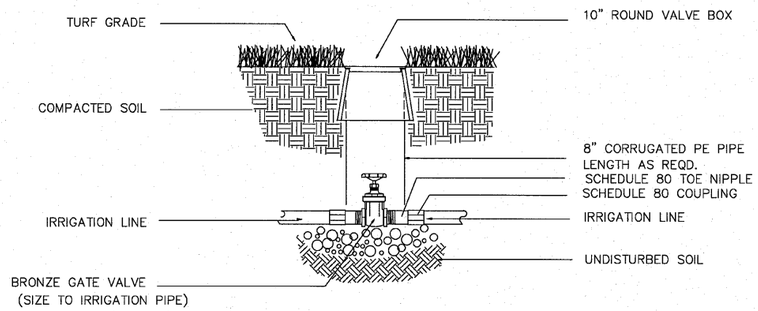

4 ISOLATION VALVE 3" and SMALLER

NO SCALE

GENERAL IRRIGATION NOTES

1. CONTACT ALL UTILITIES AND GENERAL CONTRACTOR AT LEAST 5 DAYS PRIOR TO THE START OF CONSTRUCTION.
2. MAINTAIN ALL CODES REQUIRED BY LOCAL AUTHORITIES.
3. COORDINATE ELECTRICAL HOOKUP WITH GENERAL CONTRACTOR, ELECTRICIAN AND OWNER
4. COORDINATE ALL SLEEVES AND PENETRATIONS WITH GENERAL CONTRACTOR
   IRRIGATION CONTRACTOR IS RESPONSIBLE FOR BORES, SLEEVES OR PENETRATIONS RELATED TO THE IRRIGATION
5. IRRIGATION HEADS AND LINES ARE SCHEMATIC – FIELD ADJUSTMENTS MAY BE REQUIRED
6. INSTALL ALL PIPING AND FITTINGS USING GLUE METHODS CONSISTANT WITH MANUFACTURER'S RECOMMENDATIONS
7. MAINLINE PIPING SHALL BE INSTALLED AT MINIMUM OF 12"
   LATERAL LINES SHALL BE INSTALLED AT A MINIMUM DEPTH OF 12"
8. CAP OR PLUG ALL OPENINGS AS SOON AS LINES ARE INSTALLED TO PREVENT DEBRIS IN THE LINE.
9. THOROUGHLY FLUSH ALL LINES PRIOR TO THE OPERATION OF SPRINKLER HEADS.
10. INSTALL WIRES A MIN. OF 10" BELOW GRADE.
    –SPLICES ARE NOT ALLOWED IN THE TRENCH.
    –PROVIDE A 24" EXPANSION LOOP AT EACH CHANGE IN DIRECTION.
11. THE IRRIGATION SYSTEM SHALL BE TESTED AT OPERATING PRESSURE FOR A MINIMUM OF 4 HOURS. REPAIR ALL LEAKS AND RETEST AFTER CURING.
12. UPON COMPLETION OF TEST, COMPLETE ASSEMBLY OF ALL EQUIPMENT AND SPRINKLERS FOR PROPER DISTRIBUTION.
13. PROVIDE 'AS BUILT' DRAWINGS SHOWING ALL COMPONENTS OF THE SYTEM PRIOR TO FINAL PAYMENT. PROVIDE FINAL GPM OF ZONES, WIRE RUNS, HEADS, VALVES, PIPE SIZES ETC...
14. SLEEVE UNDER ROAD, WALLS, PAVERS, AND DRIVES
    –SLEEVE WIRE AND PIPING SEPARATELY, SEE PLAN FOR SIZING
    –ALL DECODER WIRING TO BE SLEEVED IN A MININUM 2" SLEEVE
15. ALL GASKETED PRESSURE PIPE AND FITTINGS SHALL BE THRUST BLOCKED. NO CONCRETE PREFORMED BLOCKS WILL BE ALLOWED.
16. ALL EXISTING UTILITIES WHICH ARE NOT SHOWN ON THESE DOCUMENTS WHICH NEED TO BE REMOVED, RELOCATED AND/OR ADJUSTED SHALL BE THE RESPONSIBILITY OF THE IRRIGATION CONTRACTOR.
17. ALL BIDDERS SHALL VISIT AND REVIEW THE SITE AND FAMILIAR THEMSELVES WITH THE SITE PRIOR TO SUBMITTING A BID.
18. CONTRACTOR TO PROVIDE BLOW OUT TAP ON THE DISCHARGE DROP PIPE
19. CONTRACTOR IS RESPONSIBLE FOR SUBMITTING AND AQUIRING ALL PERMITS
20. CONTRACTOR TO NOTIFY ENGINEER PRIOR TO BEGINNING WORK IF STATIC PRESSURE IS LESS THAN 50PSI

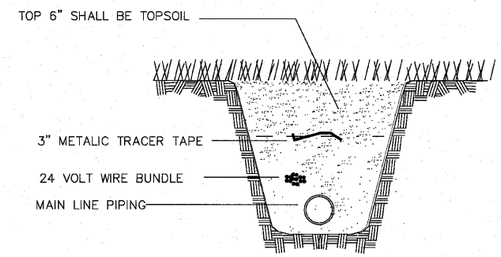

5 WIRE TRENCH

NO SCALE

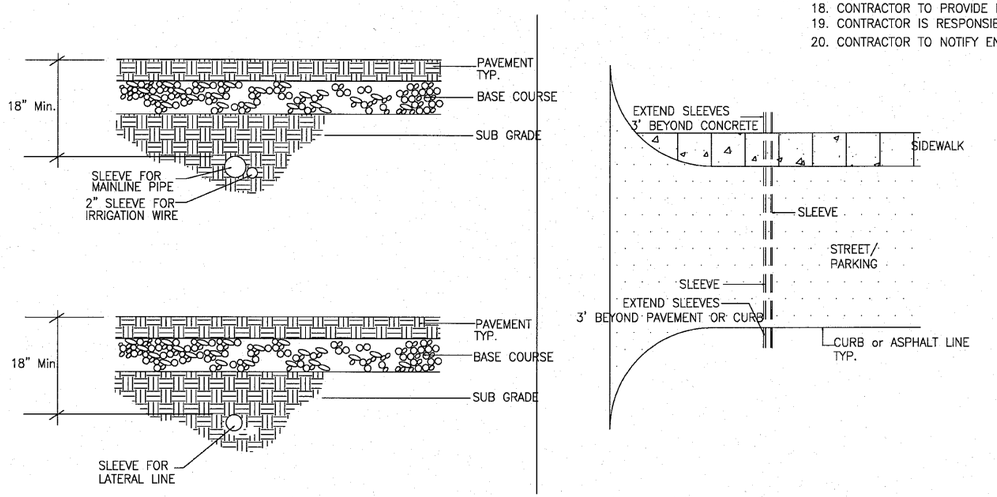

6 SLEEVING

NO SCALE

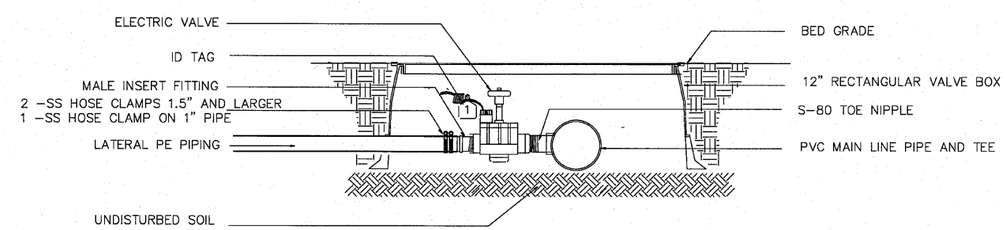

7 ELECTRIC VALVE - PE PIPE

NO SCALE

Hitchcock Design Group
Creating Better Places®
221 West Jefferson Avenue
Naperville, Illinois 60540
T 630.961.1787
F 630.961.9925

SHEET REVIEW	
AGENCY	DATE

REVISIONS		
NO.	ITEM	DATE

SCALE:	Hor. 1"=30'
DRAWN BY:	DPF
CHECKED BY:	DPF
DATE:	9/3/2010

McClure Engineering Associates, Inc.
7282 Argus Drive Rockford, Illinois 61107–5837
(815) 398–2332 FAX (815) 398–2496
Design Firm License: Illinois 184–000816

IRRIGATION DETAILS

RIVERWALK MUSEUM CAMPUS

711 NORTH MAIN STREET — ROCKFORD, IL

FILE: — JOB: 04-28-10-008

SHEET NO. 37 OF 148

F.A. RTE.	SECTION	COUNTY	TOTAL SHEETS	SHEET NO.
	06-00543-00-BT	WINNEBAGO	148	38
FED. ROAD DIST. NO.	ILLINOIS	CONTRACT NO.		85521

SCALES:
PLAN: 1"= 10'
0 10 20
Scale in Feet

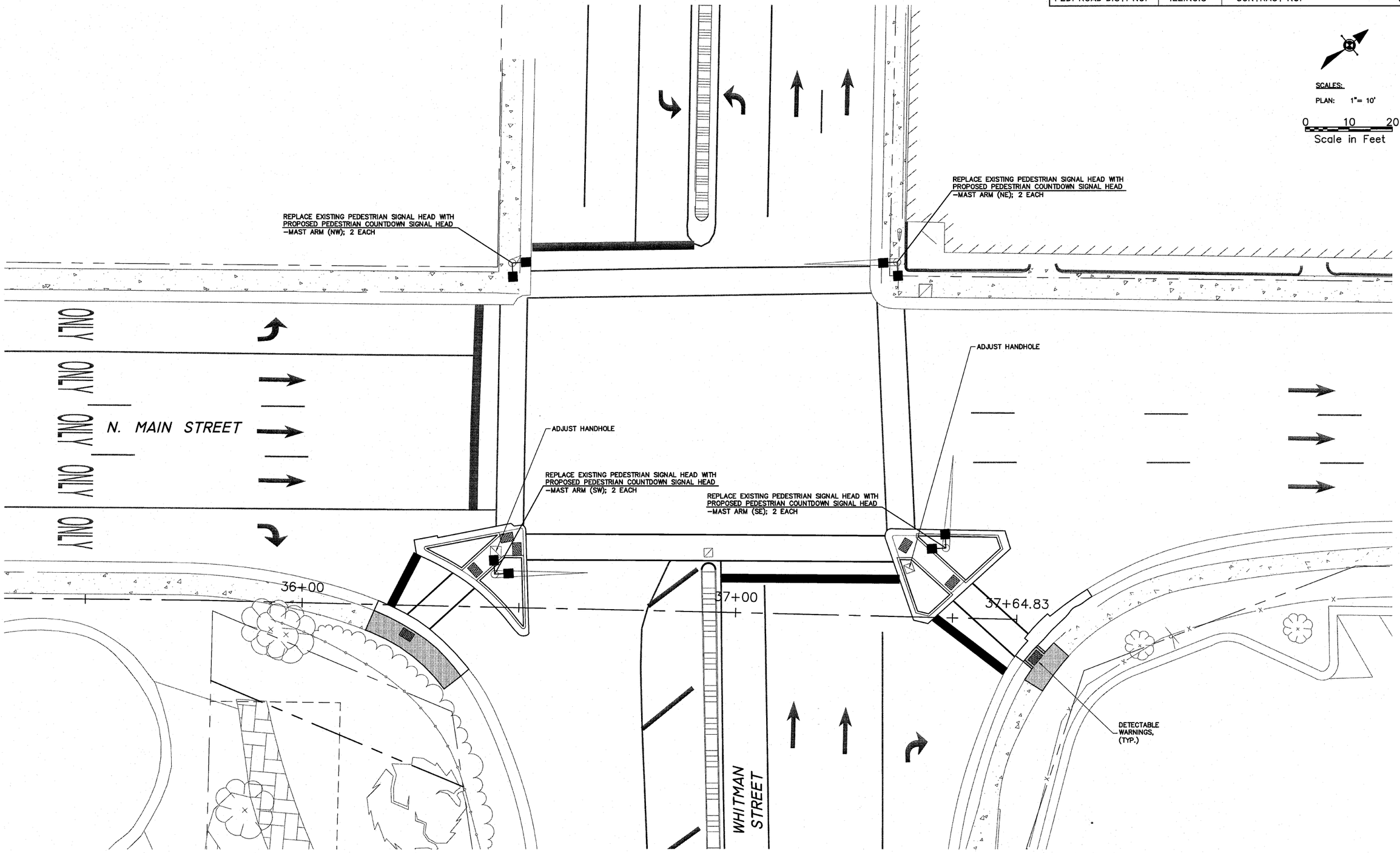

SHEET REVIEW	
AGENCY	DATE

REVISIONS		
NO.	ITEM	DATE

SCALE:	Hor. 1"=10'
DRAWN BY:	TH
CHECKED BY:	JWH
DATE:	AUGUST 13, 2010

McClure Engineering Associates, Inc.
7282 Argus Drive Rockford, Illinois 61107-6637
(815) 398-2332 FAX (815) 398-2496
Design Firm License: Illinois 184-000816

PEDESTRIAN SIGNAL PLAN (WHITMAN & MAIN)

RIVERWALK MUSEUM CAMPUS

711 NORTH MAIN STREET ROCKFORD, IL

FILE:H:\08-008 RIVERWALK MUSEUM\DESIGN\DRAWINGS\08-008 PEDESTRIAN SIGNAL PLAN (WHITMAN & MAIN).DWG

SHEET NO. 38 OF 148

F.A. RTE.	SECTION	COUNTY	TOTAL SHEETS	SHEET NO.
	06-00543-00-BT	WINNEBAGO	71	----
FED. ROAD DIST. NO.		ILLINOIS	CONTRACT NO.	

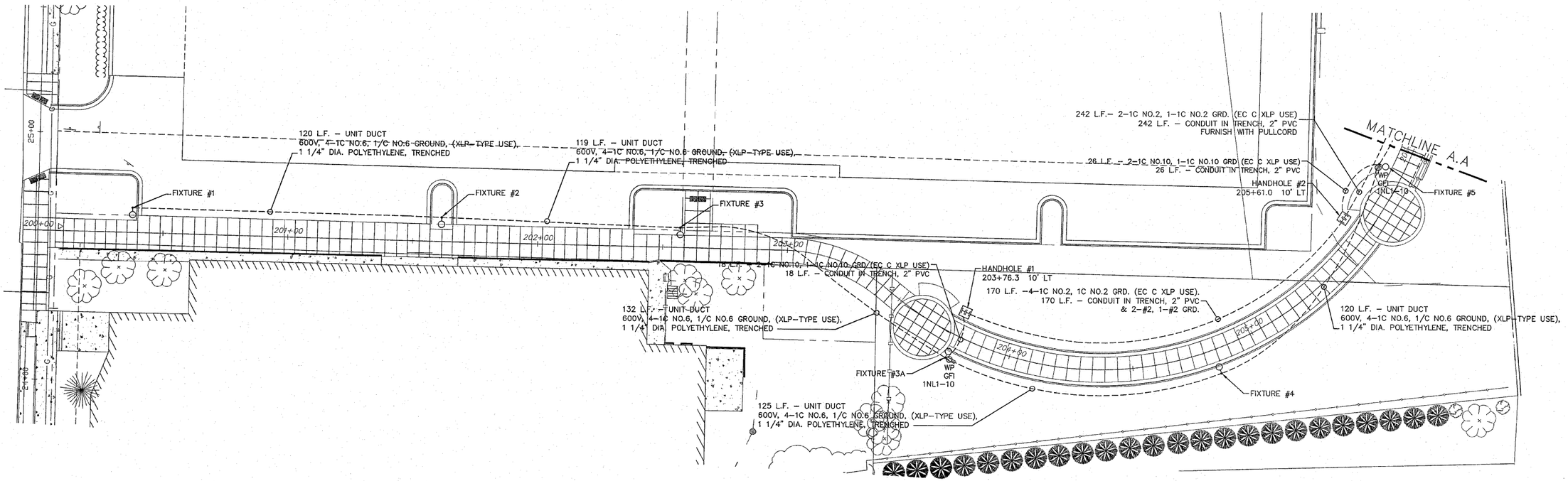

1 ELECTRICAL PLAN-200+00 TO 206+00

SCALE: 1" = 20'-0"

ELECTRICAL SYMBOLS

GENERAL ELECTRICAL SYMBOLS

- CONDUIT RUN ABOVE GRADE
- BURIED CONDUIT
- HANDHOLE
- PB PULL BOX
- J JUNCTION BOX- EXPOSED
- J JUNCTION BOX – RECESSED

LIGHTING SYMBOLS

- A 1a WALL MOUNTED HID LIGHTING FIXTURE. SIZE AND TYPE AS INDICATED ON SCHEDULE.
- A 1a INGRADE HID WALL WASH LIGHTING FIXTURE– SIZE AND TYPE AS INDICATED ON SCHEDULE.
- A 1a LIGHTING STANDARD – SINGLE FIXTURE, POLE MOUNTED. NUMBER IDENTIFIES FIXTURE

  LIGHTING FIXTURES:
  REFER TO LIGHTING FIXTURE SCHEDULE FOR DESCRIPTION AND MOUNTING.
  "1" NUMBER INDICATES BRANCH CIRCUIT NUMBER(S)
  "a" LOWER CASE LETTER INDICATES SWITCH CONTROL(S)
- TC TIME CLOCK
- PC PHOTOCELL

POWER SYMBOLS

- GFI WP DUPLEX RECEPTACLE
  "GFI" RECEPTACLE HAS GROUND FAULT CIRCUIT INTERRUPTER
  "WP" RECEPTACLE WITH WEATHER PROOF COVER
- C CONTACTOR–SEE SCHEDULE
- T TRANSFORMER

ONE–LINE SYMBOLS

- PANELBOARD
- GROUNDING ELECTRODE CONDUCTOR
- M UTILITY METER

ELECTRICAL ABBREVIATIONS

C	CONDUIT		
EX	EXISTING		
GRD	GROUND		
JB	JUNCTION BOX		
KW	KILOWATTS		
KVA	KILO VOLT AMPERES		
MAX	MAXIMUM		
MFG	MANUFACTURER		
MIN	MINIMUM		
		NC	NORMALLY CLOSED
		NEC	NATIONAL ELECTRICAL CODE
		NO	NORMALLY OPEN
		PH	PHASE (ø)
		PNL	PANEL
		UNO	UNLESS NOTED OTHERWISE
		V	VOLTS
		WP	WEATHER PROOF
		FBO	FURNISHED BY OTHERS

RAED SALEM
062-059650
LICENSED PROFESSIONAL ENGINEER OF ILLINOIS
Exp. 11.30.2011
9/1/2010

Larson & Darby Group
Architects Engineers Planners
Rockford Office – 1520 Kiley Blvd., Suite 210, Rockford, IL 61107 Ph: 815.226.1200 Fax: 815.226.1230
St. Charles Office – 3520 Preston Drive, St. Charles, IL 60175 Ph: 630.513.9000 Fax: 630.513.9001
Peoria Office – 3416 Pioneer Pkwy., Peoria, IL 61615 Ph: 309.693.8080 Fax: 309.693.8083

SHEET REVIEW	
AGENCY	DATE

REVISIONS		
NO.	ITEM	DATE

SCALE:	Hor. 1"=20' Ver. 1"=5'
DRAWN BY:	MS
CHECKED BY:	JWH
DATE:	OCTOBER 1, 2010

McClure Engineering Associates, Inc.
7282 Argus Drive (815) 398-2832
Rockford, Illinois 61107-5837 FAX (815) 398-2496
Design Firm License: Illinois 184-000816

ELECTRICAL PLAN - 200+00 TO 206+00
RIVERWALK MUSEUM CAMPUS
711 NORTH MAIN STREET ROCKFORD, IL
FILE:P:\20020 MCCLURE - ROCKFORD RIVERWALK\DWG\ELEC\08-008 PP 200+00 TO 206+00.DWG JOB:04-28-10-008

SHEET NO. 39 OF 138

F.A. RTE.	SECTION	COUNTY	TOTAL SHEETS	SHEET NO.
	06-00543-00-BT	WINNEBAGO	71	----
FED. ROAD DIST. NO.		ILLINOIS	CONTRACT NO.	

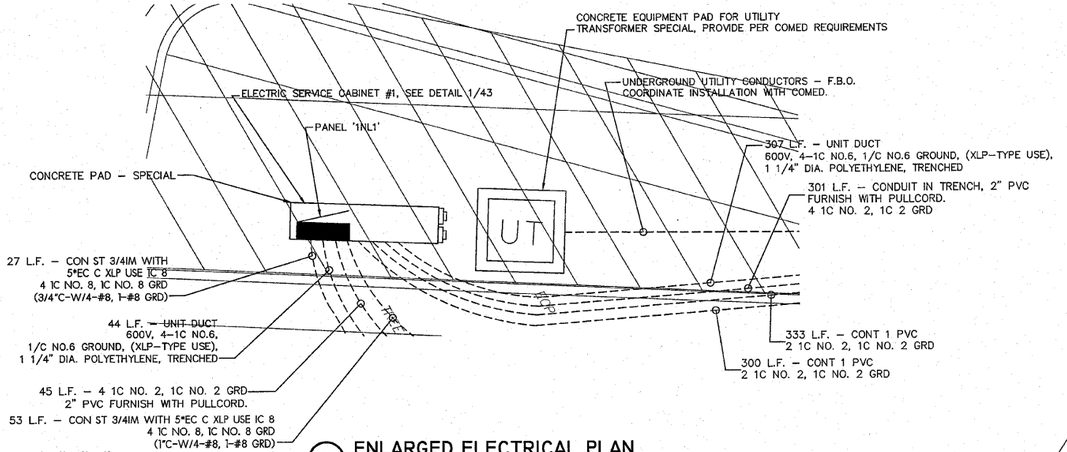

2 ENLARGED ELECTRICAL PLAN

SCALE: 1" = 1'-0"

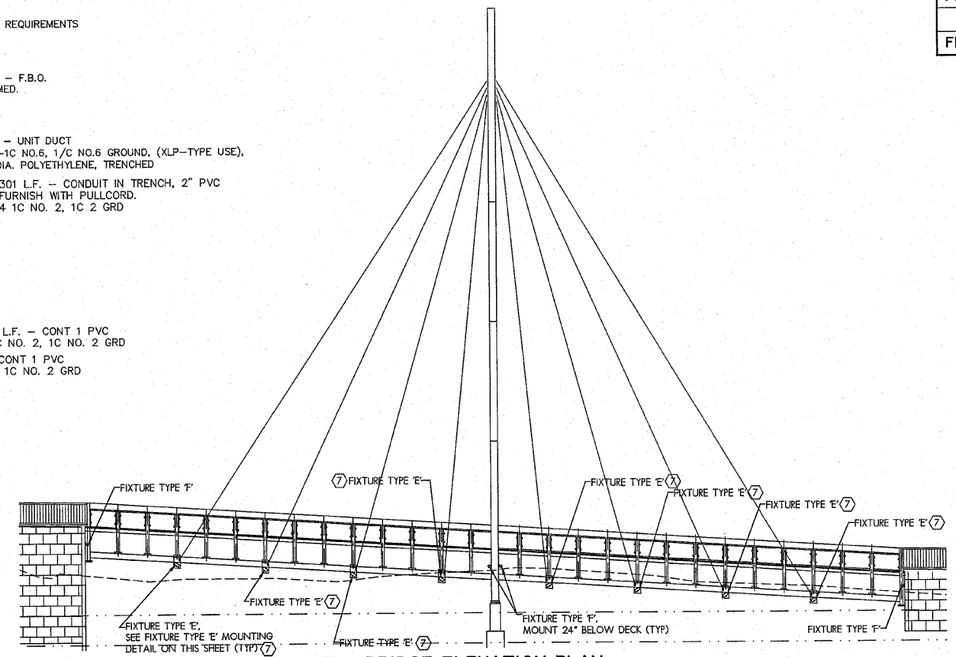

3 BRIDGE ELEVATION PLAN

SCALE: NONE

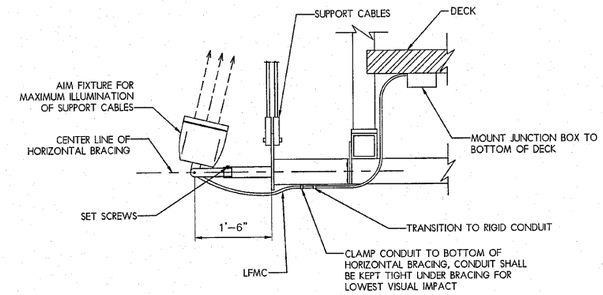

4 FIXTURE TYPE 'E' MOUNTING DETAIL

SCALE: NONE

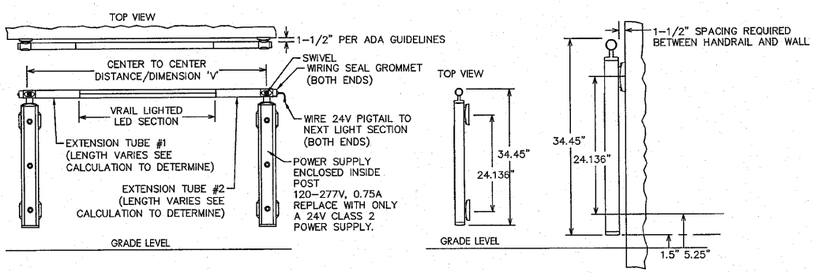

EXTENSION TUBE LENGTH (FOR STRAIGHT SECTIONS).
DIMENSION 'V' LIGHTED SECTION–3.25"=RESULT/2 = LENGTH PER EXTENSION TUBE*
EXAMPLE: 60"–41.75" = 15/2 = 7.5" LENGTH PER EXTENSION TUBE*

5 HANDRAIL MOUNTING DETAIL

SCALE: NO SCALE

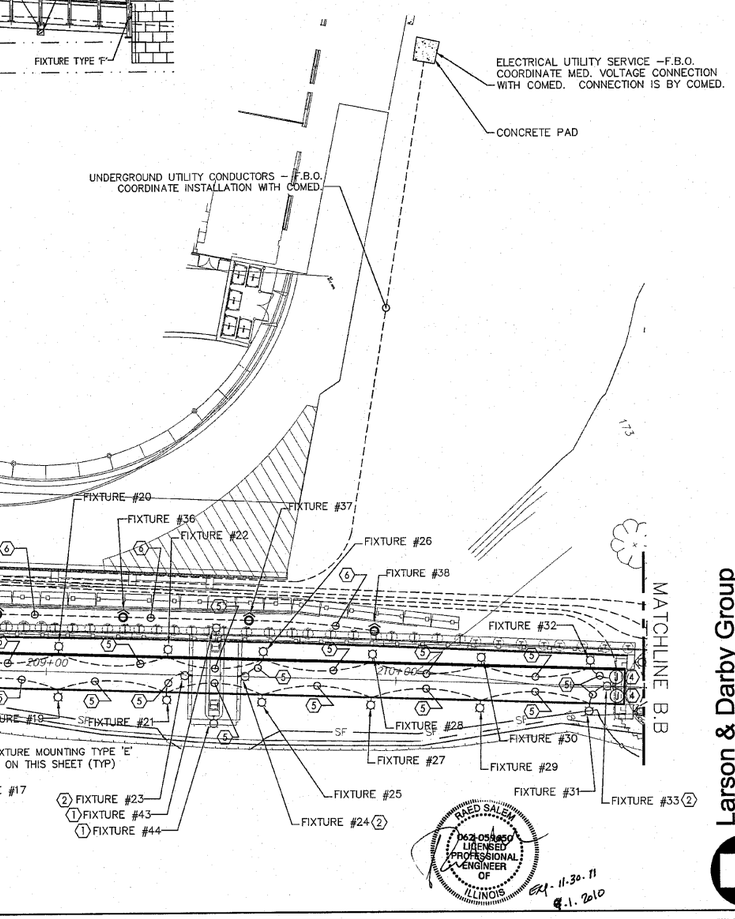

1 ELECTRICAL PLAN-206+00 TO 211+00

SCALE: 1" = 20'-0"

KEYED NOTES:

1. MOUNT AT 10' ABOVE DECK, AIM FOR MAX. ILLUMINATION OF VERTICAL STRUCTURE.
2. MOUNT TYPE 'F' FLOODLIGHT BELOW BRIDGE DECK. MOUNT TO CONCRETE SUPPORT STRUCTURE 24" BELOW DECKING. HOMERUN TO PANEL INL1–13(15).
3. INSTALL IN-GRADE UPLIGHT FIXTURE FLUSH WITH FINISHED GRADE. HOMERUN TO INL1–6(8).
4. MOUNT JUNCTION BOX BELOW BRIDGE DECK AND RUN CONDUIT THROUGH ABUTMENT WALL TO HOME RUN IN CABINET.
5. 40 LF. – CON ST 1"IM WITH 5*EC C XLP USE IC 8 4 1C NO. 8, 1C NO. 8 GRD (1"C–W/4–#8, 1–#8 GRD)
6. 46 LF. – CON ST 1"IM WITH 5*EC C XLP USE IC 8 4 1C NO. 8, 1C NO. 8 GRD (1"C–W/4–#8, 1–#8 GRD)
7. TYPICAL FOR OTHER SIDE OF BRIDGE.
8. 20 LF. – CON ST 1"IM WITH 5*EC C XLP USE IC 8 4 1C NO. 8, 1C NO. 8 GRD (1"C–W/4–#8, 1–#8 GRD)

Larson & Darby Group
Architects Engineers Planners

SHEET REVIEW	
AGENCY	DATE

REVISIONS		
NO.	ITEM	DATE

SCALE:	Hor. 1"=20' Ver. 1"=5'
DRAWN BY:	MS
CHECKED BY:	JWH
DATE:	OCTOBER 1, 2010

McClure Engineering Associates, Inc.
7282 Argus Drive (815) 398-2332
Rockford, Illinois 61107-5837 FAX (815) 398-2496
Design Firm License: Illinois 184-000816

ELECTRICAL PLAN - 206+00 TO 211+00
RIVERWALK MUSEUM CAMPUS
711 NORTH MAIN STREET ROCKFORD, IL
FILE:P:\20020 MCCLURE - ROCKFORD RIVERWALK\DWG\ELEC\08-008 PP 206+00 TO 211+00.DWG JOB:04-28-10-008

SHEET NO. 40 OF 138

F.A. RTE.	SECTION	COUNTY	TOTAL SHEETS	SHEET NO.
	06-00543-00-BT	WINNEBAGO	71	----
FED. ROAD DIST. NO.		ILLINOIS	CONTRACT NO.	

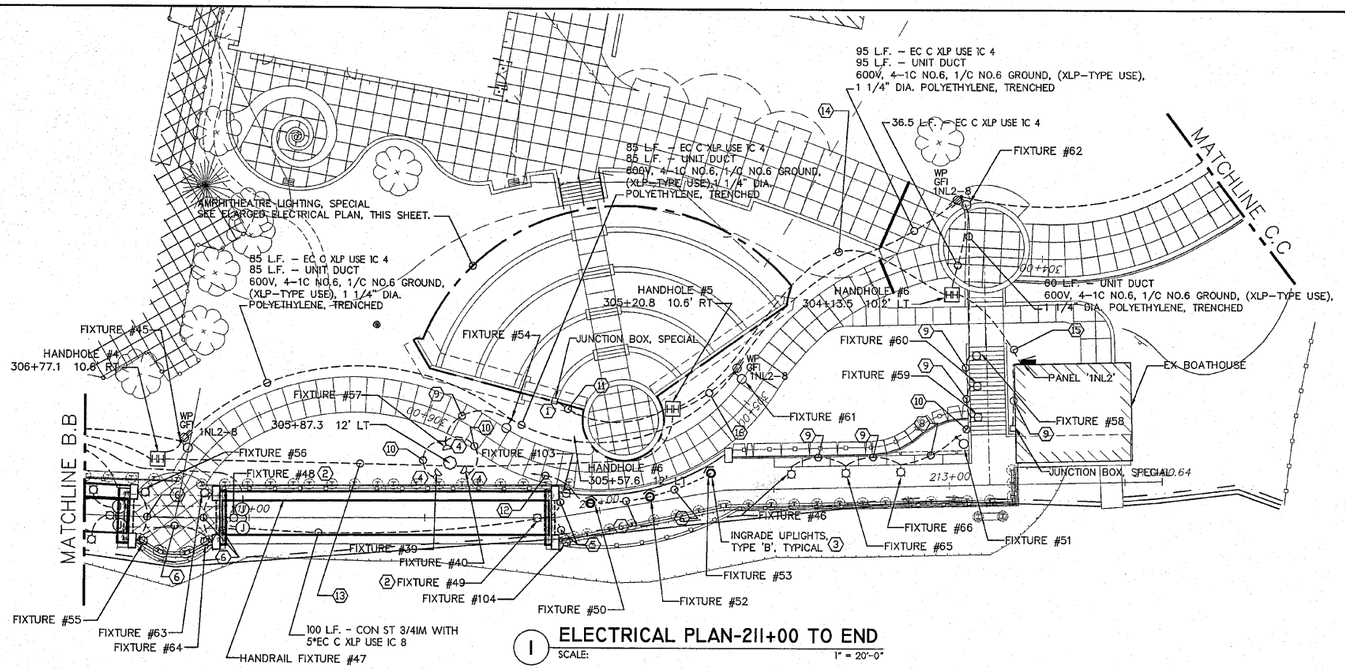

1 ELECTRICAL PLAN-211+00 TO END
SCALE: 1" = 20'-0"

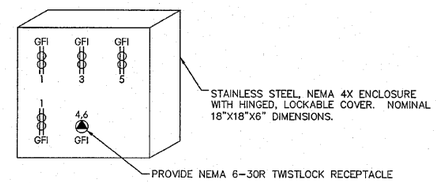

JUNCTION BOX #1, SPECIAL
SCALE: NTS

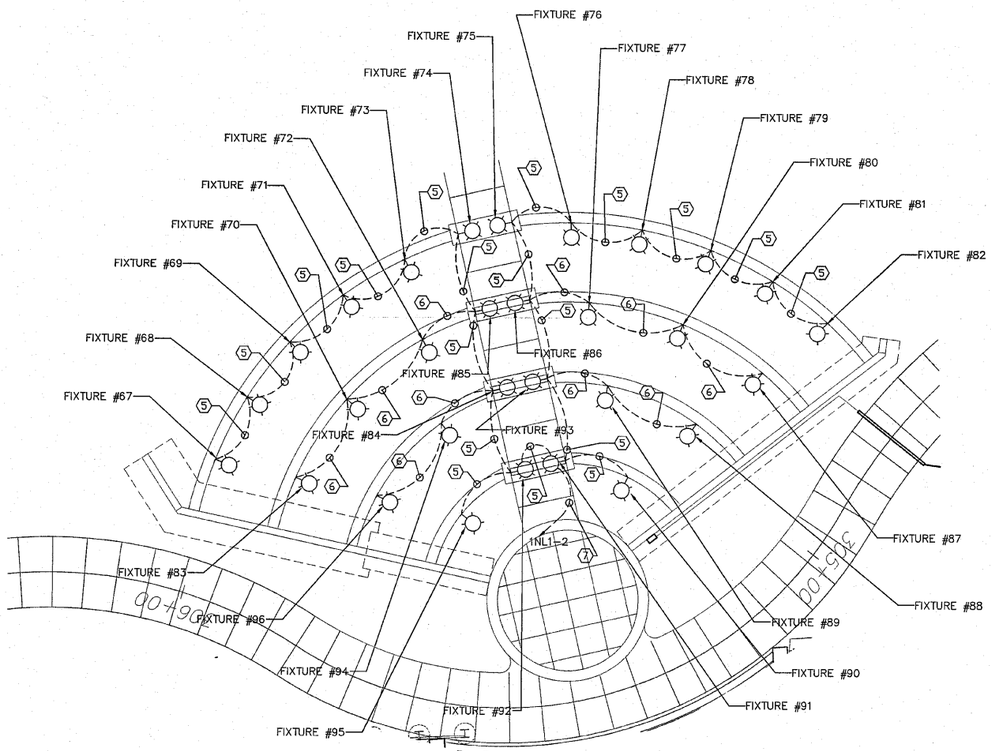

2 ENLARGED ELECTRICAL PLAN
SCALE: 1" = 10'-0"

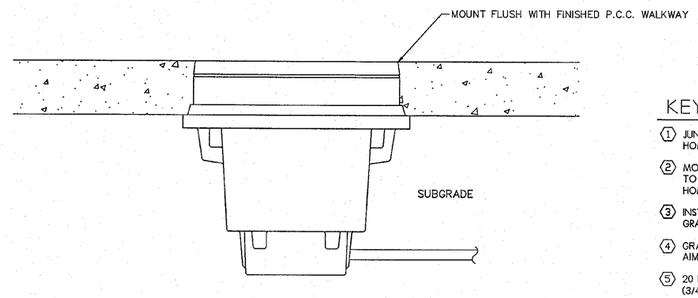

3 FIXTURE TYPE 'B' MOUNTING DETAIL
SCALE: NTS

KEYED NOTES:

1. JUNCTION BOX #1, SPECIAL. RECESS INTO RETAINING WALL. HOMERUN TO PANEL 'INL2' WITH 1"C WITH 12–#8, 1–#8 GRD.
2. MOUNT TYPE 'F' FLOODLIGHT BELOW BRIDGE DECK. MOUNT TO CONCRETE SUPPORT STRUCTURE 24" BELOW DECKING. HOMERUN TO PANEL 'INL1-13(15).
3. INSTALL IN-GRADE UPLIGHT FIXTURE FLUSH WITH FINISHED GRADE. HOMERUN TO 'INL1-6(8). SEE DETAIL THIS SHEET.
4. GRADE MOUNTED FLOODLIGHT – TYPE 'F' AIM FOR MAXIMUM ILLUMINATION OF SCULPTURE.
5. 20 L.F. – CON ST 3/4IM WITH 5*EC C XLP USE 1C 8 (3/4"C–W/4–#8, 1–#8 GRD)
6. 25 L.F. – CON ST 3/4IM WITH 5*EC C XLP USE 1C 8 (3/4"C–W/4–#8, 1–#8 GRD)
7. 300 L.F. – CON ST 3/4IM WITH 5*EC C XLP USE 1C 8 (3/4"C–W/4–#8, 1–#8 GRD)
8. 28 L.F. – UNIT DUCT 600V, 4–1C NO.6, 1/C NO.6 GROUND, (XLP–TYPE USE), 1 1/4" DIA. POLYETHYLENE, TRENCHED
9. 25 L.F. – UNIT DUCT 600V, 4–1C NO.6, 1/C NO.6 GROUND, (XLP–TYPE USE), 1 1/4" DIA. POLYETHYLENE, TRENCHED
10. 15 L.F. – UNIT DUCT 600V, 4–1C NO.6, 1/C NO.6 GROUND, (XLP–TYPE USE), 1 1/4" DIA. POLYETHYLENE, TRENCHED
11. 18 L.F. – CONDUIT IN TRENCH, 2" PVC FURNISH WITH PULLCORD
12. 435 L.F. – CON ST 3/4IM WITH 5*EC C XLP USE 1C 8 (3/4"C–W/4–#8, 1–#8 GRD)
13. 153 L.F. – CONDUIT IN TRENCH, 2" FURNISH WITH PULLCORD & 2–#2, 1–#2 GRD
14. 102 L.F. – CONDUIT IN TRENCH, 2" FURNISH WITH PULLCORD & 2–#2, 1–#2 GRD
15. 33 L.F. – CONDUIT IN TRENCH, 2" FURNISH WITH PULLCORD & 2–#2, 1–#2 GRD
16. 19 L.F. – EC C XLP USE 1C 4

RAED SALEM
062-059650
LICENSED
PROFESSIONAL
ENGINEER
OF
ILLINOIS
11-30-11
9.1.10

Larson & Darby Group
Architects Engineers Planners

SHEET REVIEW	
AGENCY	DATE

REVISIONS		
NO.	ITEM	DATE

SCALE:	Hor. 1"=20' Ver. 1"=5'
DRAWN BY:	MS
CHECKED BY:	JMH
DATE:	OCTOBER 1, 2010

McClure Engineering Associates, Inc.
7282 Argus Drive Rockford, Illinois 61107–5837
(815) 398–2332 FAX (815) 398–2496
Design Firm License: Illinois 184–000816

ELECTRICAL PLAN - 211+00 TO END
RIVERWALK MUSEUM CAMPUS
711 NORTH MAIN STREET ROCKFORD, IL
FILE:P:\20020 MCCLURE - ROCKFORD RIVERWALK\DWG\ELEC\08-008 PP 211+00 TO END.DWG JOB:04-28-10-008

SHEET NO. 41 OF 138

F.A. RTE.	SECTION	COUNTY	TOTAL SHEETS	SHEET NO.
	06-00543-00-BT	WINNEBAGO	71	----
FED. ROAD DIST. NO.		ILLINOIS	CONTRACT NO.	

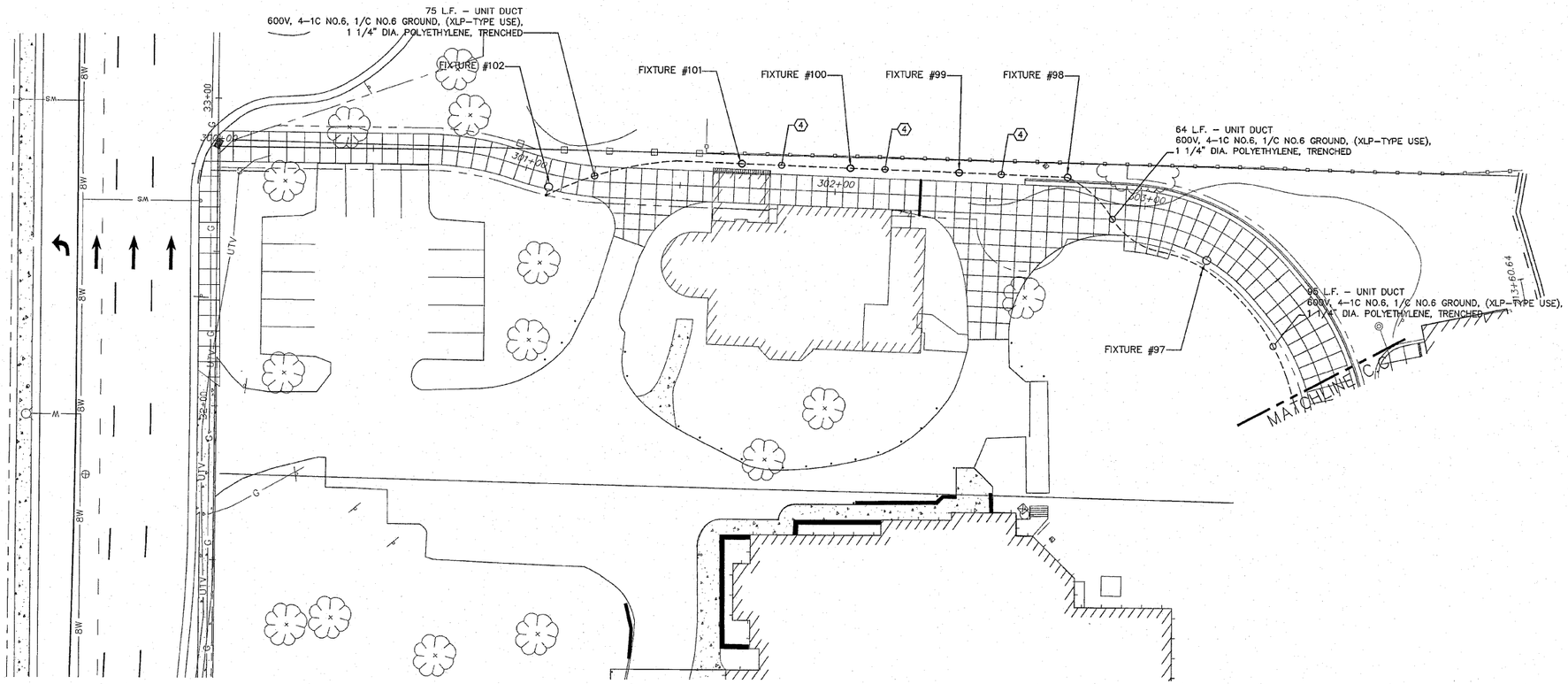

1 ELECTRICAL PLAN-300+00 TO 305+00
SCALE: 1" = 20'-0"

KEYED NOTES:

1. JUNCTION BOX #1, SPECIAL. RECESS INTO RETAINING WALL. HOMERUN TO PANEL 'INL2' WITH 1"C WITH 12–#8, 1–#8 GRD.
2. MOUNT TYPE 'F' FLOODLIGHT BELOW BRIDGE DECK. MOUNT TO CONCRETE SUPPORT STRUCTURE 24" BELOW DECKING. HOMERUN TO PANEL 1NL1–13(15).
3. INSTALL IN-GRADE UPLIGHT FIXTURE FLUSH WITH FINISHED GRADE. HOMERUN TO 1NL1–6(8).
4. 45 L.F. – UNIT DUCT
   600V, 4–1C NO.6, 1/C NO.6 GROUND, (XLP–TYPE USE),
   1 1/4" DIA. POLYETHYLENE, TRENCHED

ELECTRICAL FIXTURE SCHEDULE

FIXTURE #	TYPE	LOCATION	CKT
1	A	200+37.3 10'LT	1NL1–1(3)
2	A	201+61.3 10'LT	1NL1–5(7)
3	A	202+56.9 10'LT	1NL1–1(3)
3A	A1	203+76.7 10' RT	1NL1–5(7)
4	A	204+83.0 10' RT	1NL1–1(3)
5	A1	205+89.1 10' LT	1NL1–5(7)
6	A	207+13.0 10' LT	1NL1–1(3)
7	B	207+13.0 13' LT	INL1–6(8)
8	B	207+47.3 13' LT	INL1–6(8)
9	B	207+81.4 13' LT	INL1–6(8)
10	A1	208+00.5 10' LT	1NL1–5(7)
11	C	208+20.8 20.2' LT	INL1–17
12	C	208+29.2 16.2' LT	INL1–17
13	H	208+31.0–210+65.3	1NL1–4
14	F	208+31.0 0' LT	1NL1–9(11)
15	E	208+57.1 9.8' RT	1NL1–9(11)
16	E	208+57.1 9' LT	1NL1–9(11)
17	E	208+82.3 9.8' RT	1NL1–9(11)
18	E	208+82.3 9' LT	1NL1–9(11)
19	E	209+07.5 9.8' RT	1NL1–9(11)
20	E	209+07.5 9' LT	1NL1–9(11)
21	E	209+32.7 9.8' RT	1NL1–9(11)
22	E	209+32.7 9' LT	1NL1–9(11)

ELECTRICAL FIXTURE SCHEDULE

FIXTURE #	TYPE	LOCATION	CKT
23	F	209+47.0 0' LT	1NL1–9(11)
24	F	209+49.0 0' LT	1NL1–9(11)
25	E	209+63.4 9.8' RT	1NL1–9(11)
26	E	209+63.4 9' LT	1NL1–9(11)
27	E	209+88.5 9.8' RT	1NL1–9(11)
28	E	209+88.5 9' LT	1NL1–9(11)
29	E	210+14.0 9.8' RT	1NL1–9(11)
30	E	210+14.0 9' LT	1NL1–9(11)
31	E	210+39.0 9.8' RT	1NL1–9(11)
32	E	210+39.0 9' LT	1NL1–9(11)
33	F	210+65.1 0' LT	1NL1–9(11)
34	B	208+50.0 17' LT	INL1–6(8)
35	B	208+86.0 17' LT	INL1–6(8)
36	B	209+21.5 17' LT	INL1–6(8)
37	B	209+58.0 17' LT	INL1–6(8)
38	B	209+93.8 15' LT	INL1–6(8)
39	E	211+52.3 11.7' LT	1NL1–1(3)
40	E	211+62.8 12.8' LT	1NL1–1(3)
41	D	208+28.5 7.3' LT	1NL1–17
42	D	208+28.5 7.3' RT	1NL1–17
43	D	209+46.8 8.3' LT	1NL1–17
44	D	209+46.8 8.3' RT	1NL1–17
45	A1	306+71.0 8' RT	1NL1–5(7)

ELECTRICAL FIXTURE SCHEDULE

FIXTURE #	TYPE	LOCATION	CKT
46	C	212+55.1 6.3' LT	1NL1–17
47	H	210+92.3–211+85.3	1NL1–4
48	F	210+93.5 0' LT	1NL1–13(15)
49	F	211+84.3 0' LT	1NL1–13(15)
50	B	211+97.7 2.5' LT	INL1–6(8)
51	A	213+25.3 2.5' LT	1NL1–5(7)
52	B	212+14.7 1.6' LT	INL1–6(8)
53	B	212+33.0 5.5' LT	INL1–6(8)
54	A	305+78.6 8' RT	1NL1–1(3)
55	D	210+66.9 9.2' RT	1NL1–17
56	D	210+66.9 9.2' LT	1NL1–17
57	E	211+55.8 21.9' LT	1NL1–5(7)
58	C	213+48.5 5' LT	1NL1–17
59	C	213+31.0 5' LT	1NL1–17
60	C	213+39.8 5' LT	1NL1–17
61	A1	304+95.2 8' RT	1NL1–5(7)
62	A1	304+15.2 19' RT	1NL1–1(3)
63	D	210+66.9 9.2' LT	1NL1–17
64	D	210+66.9 9.2' RT	1NL1–17
65	C	212+70.6 6.3' LT	1NL1–17
66	C	212+86.3 6.3' LT	1NL1–17
67	C	306+01.5 19.5' RT	1NL1–2
68	C	306+00.2 29.3' RT	1NL1–2

ELECTRICAL FIXTURE SCHEDULE

FIXTURE #	TYPE	LOCATION	CKT
69	C	305+97.3 38.6' RT	1NL1–2
70	C	305+90.0 39.9' RT	1NL1–2
71	C	305+94.2 47.7' RT	1NL1–2
72	C	305+87.8 46.7' RT	1NL1–2
73	C	305+91.9 55.9' RT	1NL1–2
74	C	305+87.8 63.9' RT	1NL1–2
75	C	305+86.4 66.3' RT	1NL1–2
76	C	304+83.0 55.0' RT	1NL1–2
77	C	304+79.1 46.4' RT	1NL1–2
78	C	304+79.1 46.4' RT	1NL1–2
79	C	304+76.9 37.1' RT	1NL1–2
80	C	304+84.2 33.4' RT	1NL1–2
81	C	304+75.0 27.5' RT	1NL1–2
82	C	304+74.2 17.6' RT	1NL1–2
83	C	305+92.2 46.2' RT	1NL1–2
84	C	305+76.4 45.5' RT	1NL1–2
85	C	305+83.7 55.3' RT	1NL1–2
86	C	305+82.3 57.9' RT	1NL1–2
87	C	304+83.4 20.2' RT	1NL1–2
88	C	304+91.9 24.2' RT	1NL1–2
89	C	304+99.2 37.9' RT	1NL1–2
90	C	305+14.4 26.8' RT	1NL1–2
91	C	305+33.8 33.7' RT	1NL1–2

ELECTRICAL FIXTURE SCHEDULE

FIXTURE #	TYPE	LOCATION	CKT
92	C	305+43.3 33.7' RT	1NL1–2
93	C	305+27.8 45.5' RT	1NL1–2
94	C	305+81.3 54.0' RT	1NL1–2
95	C	305+63.0 45.7' RT	1NL1–2
96	C	305+84.2 46.6' RT	1NL1–2
97	A	303+67.5 13' RT	1NL1–5(7)
98	G	302+74.6 8' LT	1NL1–1(3)
99	G	302+39.6 8' LT	1NL1–5(7)
100	G	302+04.6 8' LT	1NL1–1(3)
101	G	301+69.6 8' LT	1NL1–5(7)
102	A	300+52.8 8' RT	1NL1–1(3)
103	D	211+89.3 6.8' LT	1NL1–17
104	D	211+87.0 7.2' RT	1NL1–17
105	C	208+24.2 27.6' LT	1NL1–17
106	C	208+34.8 22.6' LT	1NL1–17
–	–	–	–
–	–	–	–
–	–	–	–
–	–	–	–
–	–	–	–
–	–	–	–
–	–	–	–
–	–	–	–

RAED SALEM
062-059-050
LICENSED PROFESSIONAL ENGINEER OF ILLINOIS
Exp. 11-30-11
9.1.10

Larson & Darby Group
Architects Engineers Planners

SHEET REVIEW	
AGENCY	DATE

REVISIONS		
NO.	ITEM	DATE

SCALE:	Hor. 1"=20' Ver. 1"=5'
DRAWN BY:	MS
CHECKED BY:	JWH
DATE:	OCTOBER 1, 2010

McClure Engineering Associates, Inc.
7282 Argus Drive Rockford, Illinois 61107–5837
(815) 398–2332 FAX (815) 398–2496
Design Firm License: Illinois 184–000816

ELECTRICAL PLAN - 300+00 TO 305+00

RIVERWALK MUSEUM CAMPUS

711 NORTH MAIN STREET ROCKFORD, IL

FILE:P:\20020 MCCLURE - ROCKFORD RIVERWALK\DWG\ELEC\08-008 PP 300+00 TO 305+00.DWG JOB:04-28-10-008

SHEET NO. 42 OF 138

F.A. RTE.	SECTION	COUNTY	TOTAL SHEETS	SHEET NO.
	06-00543-00-BT	WINNEBAGO	71	44
FED. ROAD DIST. NO.		ILLINOIS	CONTRACT NO.	

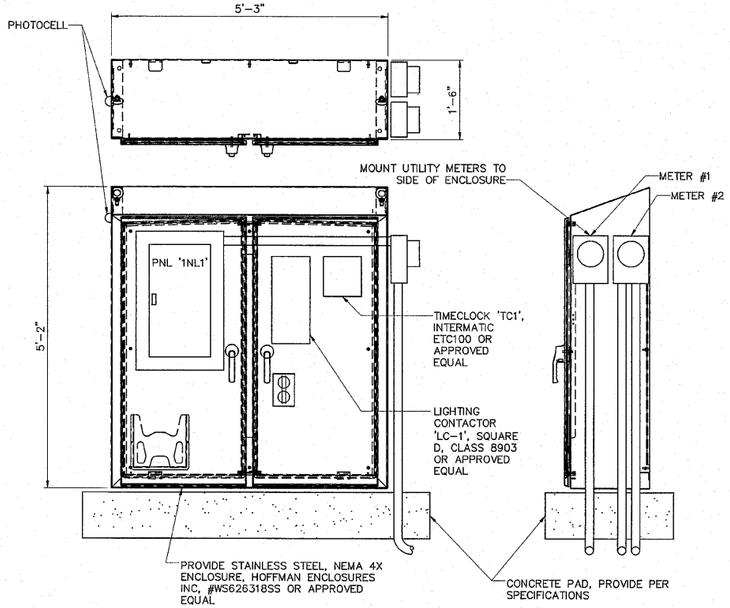

1 ENCLOSURE DETAIL
SCALE: NONE

LIGHT POLE MOUNTING HEIGHT	BOLT CIRCLE DIAMETER	METAL FOUNDATION SHAFT DIAMETER	METAL FOUNDATION SHAFT DEPTH	METAL FOUNDATION TOP PLATE (min)	CONCRETE FOUNDATION SHAFT DIAMETER	CONCRETE FOUNDATION SHAFT DEPTH	CONCRETE FOUNDATION ANCHOR ROD LENGTH (1)
≤30' (9.1 m)	11ø (292)	8 5/8 (220)	6' (1.83 m)	12 x 12 x 1 (300 x 300 x 25)	24 (610)	5'-0" (1.52 m)	4'-9" (1.45 m)
31'-35' (9.4 m – 10.7 m)	11ø (292)	8 5/8 (220)	6' (1.83 m)	12 x 12 x 1 (300 x 300 x 25)	24 (610)	5'-6" (1.67 m)	5'-3" (1.60 m)
36'-40' (10.9 m – 12.2 m)	15 (381) (3)	8 5/8 (220)	6' (1.83 m) (2)	15 x 15 x 1¼ (375 x 375 x 31)	30 (762)	6'-0" (1.83 m)	5'-9" (1.75 m)
41'-45' (12.5 m – 13.7 m)	15 (381) (3)	8 5/8 (220)	6' (1.83 m) (2)	15 x 15 x 1¼ (375 x 375 x 31)	30 (762)	6'-6" (1.98 m)	6'-3" (1.90 m)
46'-50' (14.0 m – 15.2 m)	15 (381) (3)	8 5/8 (220)	8' (2.44 m)	15 x 15 x 1¼ (375 x 375 x 31)	30 (762)	7'-0" (2.13 m)	6'-9" (2.00 m)

(1) LENGTH DOES NOT INCLUDE 4(100) HOOK.

(2) 8⅝ x 8'-0" (220x2.44m) FOR TWIN LUMINAIRES.

(3) USE THE MAXIMUM ALLOWABLE BOLD CIRCLE DIAMETER (TYP. 17 (430)) FOR A TRANSFORMER BASE.

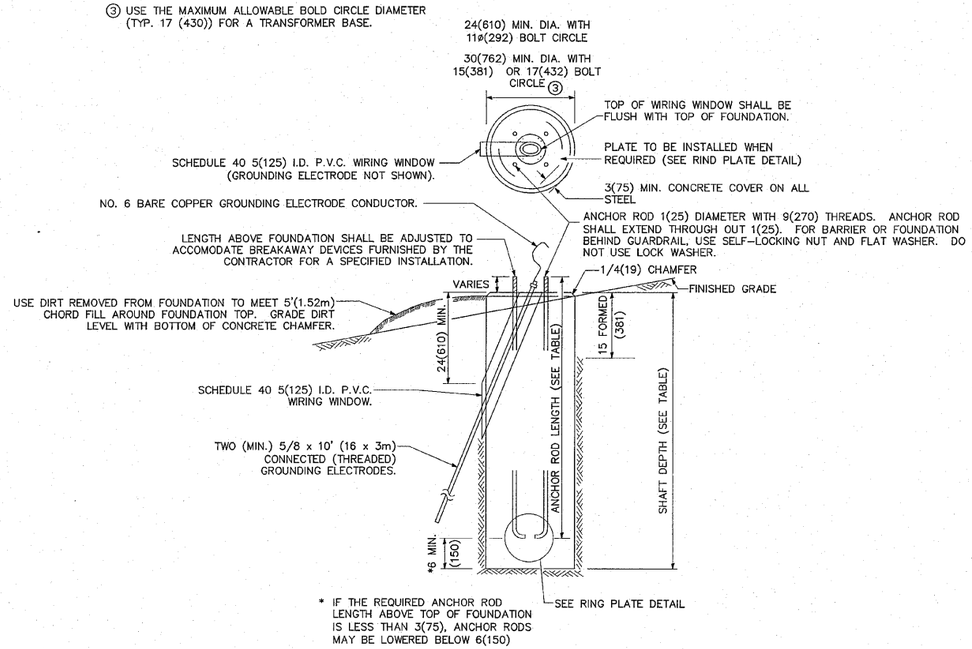

* IF THE REQUIRED ANCHOR ROD LENGTH ABOVE TOP OF FOUNDATION IS LESS THAN 3(75), ANCHOR RODS MAY BE LOWERED BELOW 6(150)

3 CONCRETE FOUNDATION
SCALE: NONE

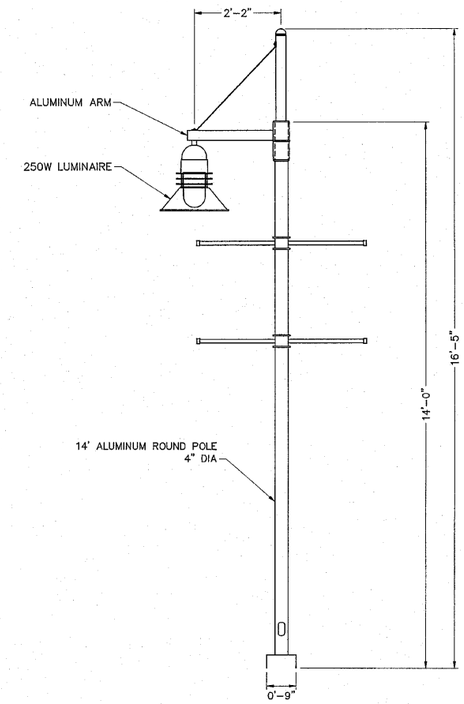

5 POLE DETAIL
SCALE: NONE

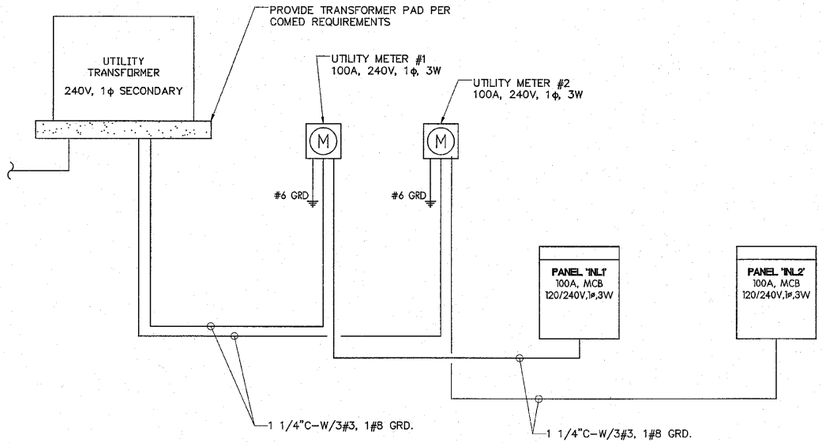

2 ONE-LINE DIAGRAM
SCALE: NONE

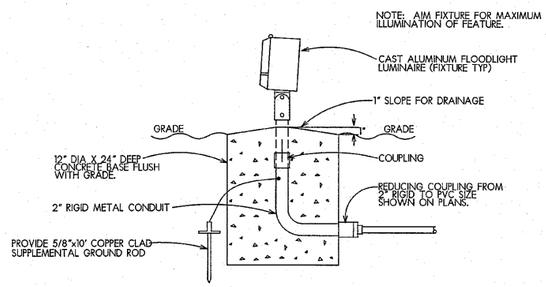

4 LIGHT FIXTURE FOUNDATION - SPECIAL
SCALE: NONE

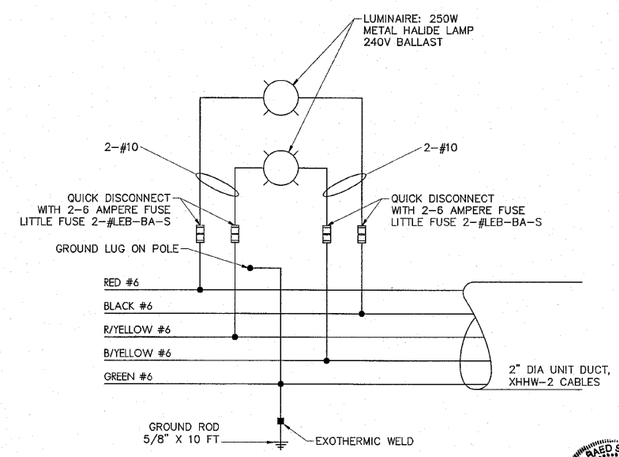

6 POLE WIRING DETAIL
SCALE: NONE

RAED SALEM 062-089650 LICENSED PROFESSIONAL ENGINEER OF ILLINOIS
Exp. 11.30.11
9.1.10

Larson & Darby Group
Architects Engineers Planners

SHEET REVIEW	
AGENCY	DATE

REVISIONS		
NO.	ITEM	DATE

SCALE:	NA
DRAWN BY:	MS
CHECKED BY:	JWH
DATE:	4/16/2010

McClure Engineering Associates, Inc.
7282 Argus Drive Rockford, Illinois 61107-5877 (815) 398-2332 FAX (815) 398-2436
Design Firm License: Illinois 184-000816

ELECTRICAL DETAILS
RIVERWALK MUSEUM CAMPUS
711 NORTH MAIN STREET ROCKFORD, IL
FILE:P:\20020 MCCLURE - ROCKFORD RIVERWALK\DWG\ELEC\20020 E6.1.DWG JOB:04-28-10-008

SHEET NO. 43 OF 138

F.A. RTE.	SECTION	COUNTY	TOTAL SHEETS	SHEET NO.
	06-00543-00-BT	WINNEBAGO	71	----
FED. ROAD DIST. NO.		ILLINOIS	CONTRACT NO.	

Panel 1NL1

Voltage: 120/240V, 1PH, 3W — Mounting: Enclosure
Mains: 100A MCB — Min. AIC: 10K
Project Number: 20020

CKT	BRKR. (A/P)	DESCRIPTION	PH. A LOAD (VA)	PH. B LOAD (VA)	DESCRIPTION	BRKR. (A/P)	CKT
1	20	POLE LIGHTS	1180		AUD. STEPLIGHTS	20	
			850		(TYPE C)	1	2
3				1180		20	
	2			1000	BRIDGE HAND RAILS	1	4
5	20	POLE LIGHTS	1180			20	
			1623			2	6
7				1180			
	2			1623	INGRADE UPLIGHTS	2	8
9	30	BRIDGE ACCENT	2360			20	
		UPLIGHTS	540		POLE RECEPTACLES	1	10
11				2360		20	
	2				SPARE	1	12
13	20	BRIDGE ACCENT LTS.	885		PANELBOARD	20	
			180		RECEPTACLE	1	14
15				885		20	
	2				SPARE	1	16
17	20	LED LIGHTS	180			20	
	1				SPARE	1	18
19	20	SPARE				20	
					SPARE	1	20
21	20	SPARE				20	
					SPARE	1	22
23	20	SPARE				20	
	1				SPARE	1	24
25	20	SPARE				20	
	1				SPARE	1	26
27	20	SPARE				20	
	1				SPARE	1	28
29	20	SPARE				20	
	1				SPARE	1	30
31		SPACE					
					SPACE		32
33		SPACE					
					SPACE		34
35		SPACE					
					SPACE		36
37		SPACE					
					SPACE		38
39		SPACE					
					SPACE		40
41		SPACE					
					SPACE		42
		Connected Load Phase A:	8.96 KVA				
		Connected Load Phase B:	8.23 KVA		Max Connected Amps:	74.65	

Panel 1NL2

Voltage: 120/240V, 1PH, 3W — Mounting: Exterior
Mains: 100A MCB — Min. AIC: 10K
*NEMA 4X Enclosure
Project Number: 20020

CKT	BRKR. (A/P)	DESCRIPTION	PH. A LOAD (VA)	PH. B LOAD (VA)	DESCRIPTION	BRKR. (A/P)	CKT
1	20	AUD. RECEPTACLE	360			20	
	1		360		AUD. RECEPTACLE	1	2
3	20	AUD. RECEPTACLE		360		30	
	1			360	AUD. RECEPTACLE		4
5	20	AUD. RECEPTACLE	360				
	1		360			2	6
7	20	IRRIGATION				20	
	1			360	RECEPTACLE	1	8
9	20	IRRIGATION				20	
	1				SPARE	1	10
11	20	IRRIGATION				20	
	1				SPARE	1	12
13	20	IRRIGATION				20	
	1				SPARE	1	14
15	20	IRRIGATION				20	
	1				SPARE	1	16
17	20	IRRIGATION				20	
	1				SPARE	1	18
19	20	IRRIGATION				20	
	1				SPARE	1	20
21	20	SPARE				20	
	1				SPARE	1	22
23	20	SPARE				20	
	1				SPARE	1	24
25	20	SPARE				20	
	1				SPARE	1	26
27	20	SPARE				20	
	1				SPARE	1	28
29	20	SPARE				20	
	1				SPARE	1	30
31		SPACE					
					SPACE		32
33		SPACE					
					SPACE		34
35		SPACE					
					SPACE		36
37		SPACE					
					SPACE		38
39		SPACE					
					SPACE		40
41		SPACE					
					SPACE		42
		Connected Load Phase A:	1.44 KVA				
		Connected Load Phase B:	1.08 KVA		Max Connected Amps:	12	

LIGHT FIXTURE SCHEDULE

TAG	DESCRIPTION	VOLTAGE	NUMBER OF LAMPS	LAMP TYPE	MANUFACTURER	CATALOG NUMBER	FEATURES
A	SITE POLE LIGHT	240V	1	250W PSMH	ARCHITECTURAL AREA LIGHTING	UCL-LUM-ANG-H3-250PSMH-DBZ OR APPROVED EQUAL	LUMINOUS RINGS, ANGLED HOOD, TYPE 3 DISTRIBUTION, PULSE START BALLAST, DARK BRONZE FINISH, FURNISH WITH SLA-17 ARM AND 14' PR4-4R14-226-B8D4-Z4 POLE. FURNISH WITH BANNER ARMS.
A1	SITE POLE LIGHT	240V	1	250W PSMH	ARCHITECTURAL AREA LIGHTING	UCL-LUM-ANG-H3-250PSMH-DBZ OR APPROVED EQUAL	LUMINOUS RINGS, ANGLED HOOD, TYPE 3 DISTRIBUTION, PULSE START BALLAST, DARK BRONZE FINISH, FURNISH WITH SLA-17 ARM AND 14' PR4-4R14-226-B8D4-Z4 POLE. FURNISH WITH BANNER ARMS, PLANTER ARMS & GFI RECEPTACLE WITH LOCKABLE WEATHERPROOF COVER.
B	IN GRADE ACCENT LIGHT	240V	1	70W PSMH	KIM LIGHTING	LTV32-WW-70PMH240 OR APPROVED EQUAL	BRONZE HOUSING, WALL WASH REFLECTOR.
C	STEPLIGHT	120V	-	15W LED	BEGA	2040LED-SLV OR APPROVED EQUAL	ALUMINUM HOUSING, LOUVER DOOR, SILVER FINISH.
D	LED ACCENT LIGHT	120V	-	4W LED	HESS	LEDIA-LF-OD-4-12-WH-N OR APPROVED EQUAL	ILLUMINATING TILE, WHITE 6500K COLOR, FURNISH EIGHT TILES & ONE DRIVER AT EACH LOCATION. COORDINATE INSTALLATION WITH COLUMN DETAILS SHEET 125.
E	SPOTLIGHT	240V	1	150W PSMH	HYDREL	7100-150CMT6-MVOLT-SP-KM-ISS -GS-STG OR APPROVED EQUAL	SPOT DISTRIBUTION, KNUCKLE-MOUNT, INTERAL SOURCE SHIELD, GLARE SHIELD, STEEL GRAY FINISH.
F	FLOODLIGHT	240V	1	150W PSMH	HYDREL	7100-150CMT6-MVOLT-NHSP-KM-ISS -DDBGS OR APPROVED EQUAL	NARROW HORIZONTAL FLOODLIGHT DISTRIBUTION, KNUCKLE MOUNT, INTERNAL SOURCE SHIELD, GLARE SHIELD, DARK BRONZE FINISH.
G	BOLLARD	240V	1	100W MH	HYDREL	3120 36 100M 240V FT GEB LP1 DDB OR APPROVED EQUAL	36" TALL BOLLARD, DARK BRONZE FINISH, FORWARD THROW 180 DEGREE DISTRIBUTION, ELECTRONIC BALLAST.
H	LIGHTED HANDRAIL	120V	-	LED	INTENSE	IRV2-**-**-36-HO-40-60S-MOD OR APPROVED EQUAL	STAGGERED 8' LED SECTIONS, SILVER POWDER COATED ALUMINUM CONSTRUCTION, POST MOUNTED, WITH DRIVERS AND ALL ACCESSORIES. REFER TO QUOTE #08167-00-A427-QTE.

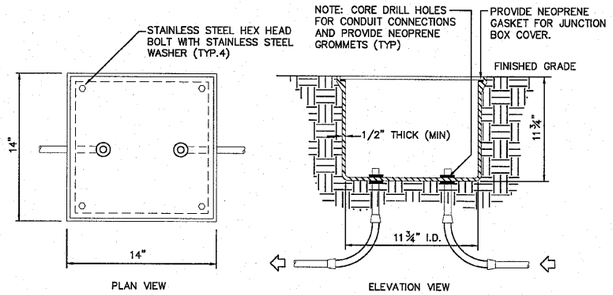

POLYMER CONCRETE JUNCTION BOX

1 HAND HOLE DETAIL
SCALE: NONE

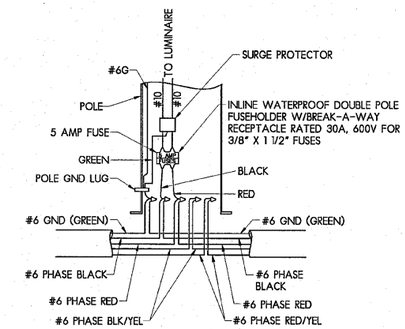

4 POLE BASE CONNECTION DETAIL
SCALE: NONE

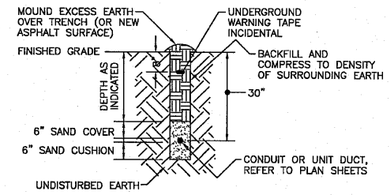

BRANCH LIGHTING CIRCUIT

NOTE: CONTRACTOR SHALL FURNISH THE CITY OF ROCKFORD DETAILED "AS-BUILT" PLANS SHOWING EXACT LOCATIONS OF INSTALLED CONDUITS AND CABLES FOR FUTURE REFERENCE.

2 DIRECT BURIAL CONDUIT
SCALE: NONE

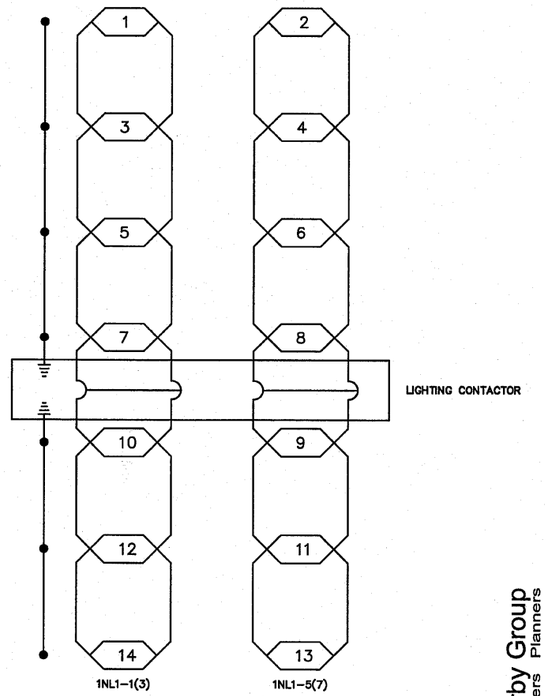

5 POLE FIXTURE CIRCUIT DIAGRAM
SCALE: NONE

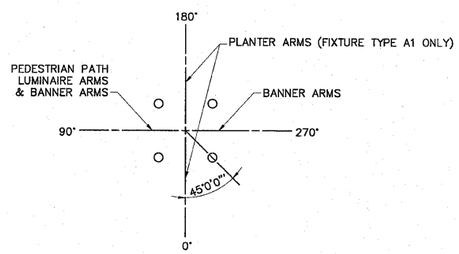

3 POLE ORIENTATION DETAIL
SCALE: NONE

Exp. 11.30.11
9.1.10

Larson & Darby Group
Architects Engineers Planners

SHEET REVIEW	
AGENCY	DATE

REVISIONS		
NO.	ITEM	DATE

SCALE:	NA
DRAWN BY:	MS
CHECKED BY:	JMH
DATE:	4/16/2010

McClure Engineering Associates, Inc.
7282 Argus Drive (815) 398-2382
Rockford, Illinois 61107-5837 FAX (815) 398-2496
Design Firm License: Illinois 184-000816

ELECTRICAL DETAILS

RIVERWALK MUSEUM CAMPUS
711 NORTH MAIN STREET — ROCKFORD, IL
FILE:P:\20020 MCCLURE - ROCKFORD RIVERWALK\DWG\ELEC\20020 E5.2.DWG — JOB:04-28-10-008

SHEET NO. 44 OF 138

F.A. RTE.	SECTION	COUNTY	TOTAL SHEETS	SHEET NO.
	06-00543-00-BT	WINNEBAGO	148	45
FED. ROAD DIST. NO.		ILLINOIS	CONTRACT NO.	

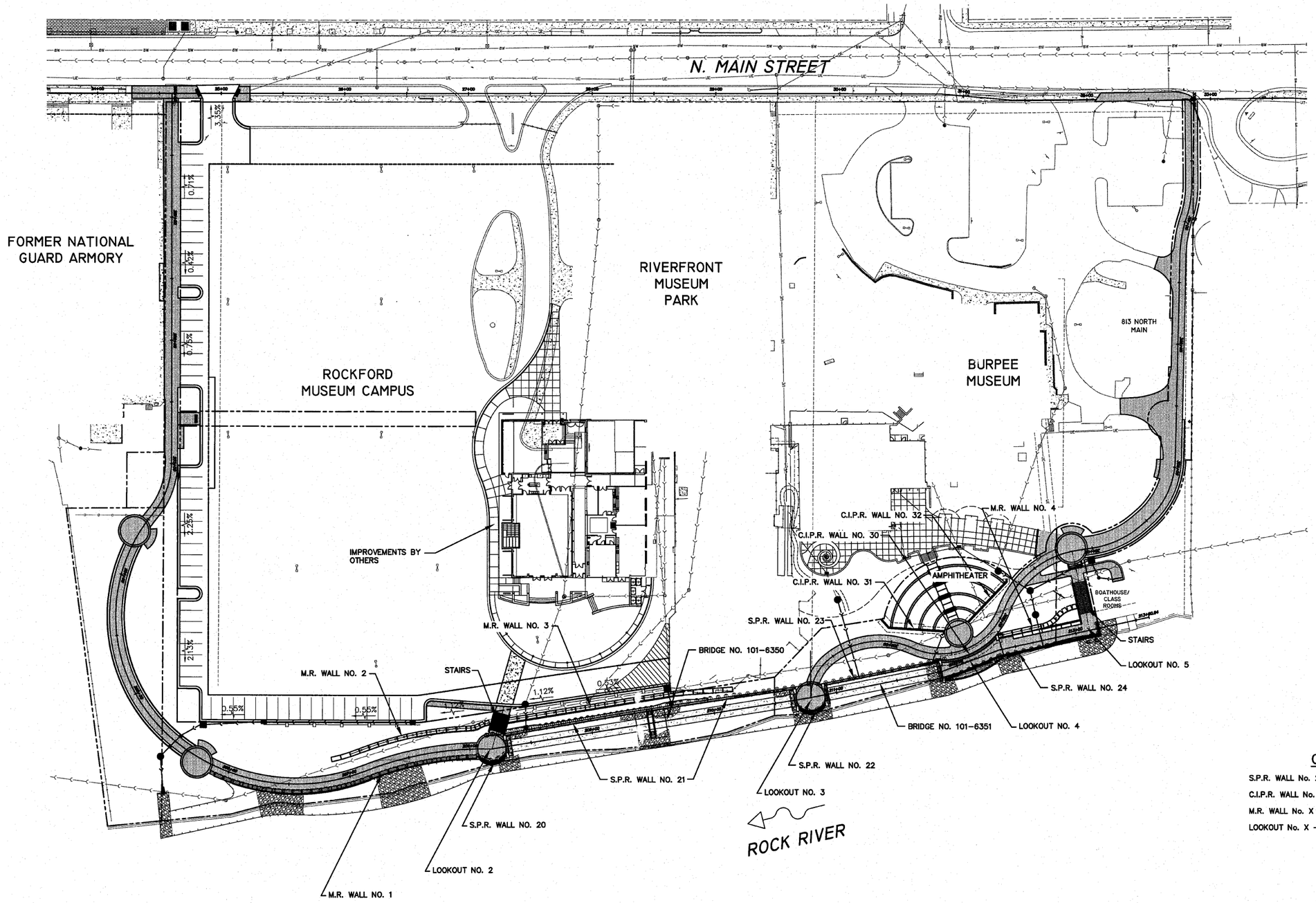

SCALES:

PLAN: 1"= 40'

0 40 80

Scale in Feet

LEGEND

- 915 PROPOSED CONTOUR
- 915 EXISTING CONTOUR MAJOR
- 901 EXISTING CONTOUR MINOR
- PROPOSED STORM SEWER
- EXISTING STORM SEWER
- PROPOSED INLET 700
- PROPOSED INLET SPECIAL
- PROPOSED MANHOLE

STRUCTURE CALL-OUT KEY

S.P.R. WALL No. 2X = SOLDIER PILE RETAINING WALL No. 2X

C.I.P.R. WALL No. 3X = CAST-IN-PLACE RETAINING WALL No. 3X

M.R. WALL No. X = PRECAST MODULAR BLOCK WALL No. X

LOOKOUT No. X --- A.K.A. --- OVERLOOK No. X

SHEET REVIEW	
AGENCY	DATE

REVISIONS		
NO.	ITEM	DATE

SCALE:	Hor. 1"= 50'
DRAWN BY:	JAW
CHECKED BY:	JWH
DATE:	AUGUST 13, 2010

McClure Engineering Associates, Inc.
7282 Argus Drive (815) 398-2332
Rockford, Illinois 61107-5837 FAX (815) 398-2496
Design Firm License: Illinois 184-000816

OVERALL STRUCTURE SITE PLAN

RIVERWALK MUSEUM CAMPUS

711 NORTH MAIN STREET — ROCKFORD, IL

FILE:H:\08-008 RIVERWALK MUSEUM\DESIGN\DRAWINGS\STRUCTURAL\GP&E\08-008 OVERALL STRUCTURE PLAN.DWG

SHEET NO. 45 OF 148

STATE OF ILLINOIS

DEPARTMENT OF TRANSPORTATION

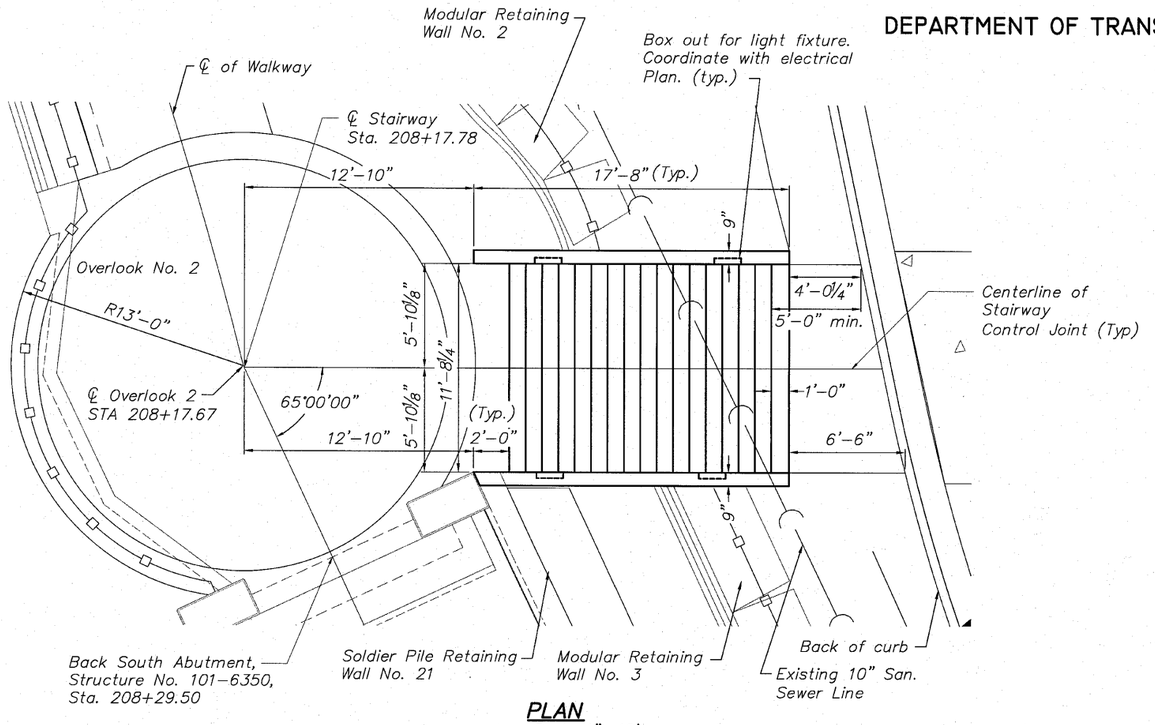

PLAN
Scale 1"=40'

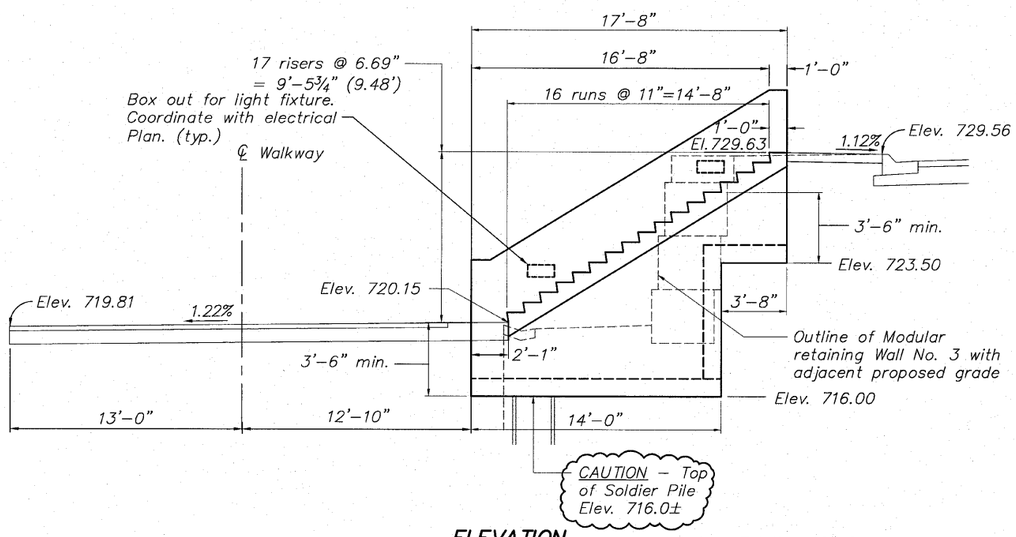

ELEVATION
Scale 1"=40'

Existing 10" Sanitary Sewer Inv. Elev. 705.26

NOTES:

1. It Shall be the responsibility of the Contractor to verify all dimensions and conditions existing in the field prior to construction and ordering materials.
2. The concrete shall be constructed as shown in accordance with Section 503 of the "Standard Specifications for Road and Bridge Construction".
3. All exposed edges of concrete walls shall have a ¾" x 45° chamfer, except as shown otherwise. Chamfers on vertical edges shall be continued a minimum of one foot below finished ground level.
4. Stair tread edges shall be protected with Balco, Inc Model P-200 or equal installed according to manufactures instructions.
5. Reinforcement bars shall all be epoxy coated.
6. See Landscape Architect sheet 137 for handrail detail.
7. Refer to Electrical Plan sheet 40 for lighting insets. Provide box-out in sidewalls for flush panels.
8. Stair Tread Nosings shall be installed in two halves to allow for a scored or sawed contraction joint along the centerline of the stairs. The joint shall be sealed with a premium polyurethane sealant in accordance with the Standard Specifications.

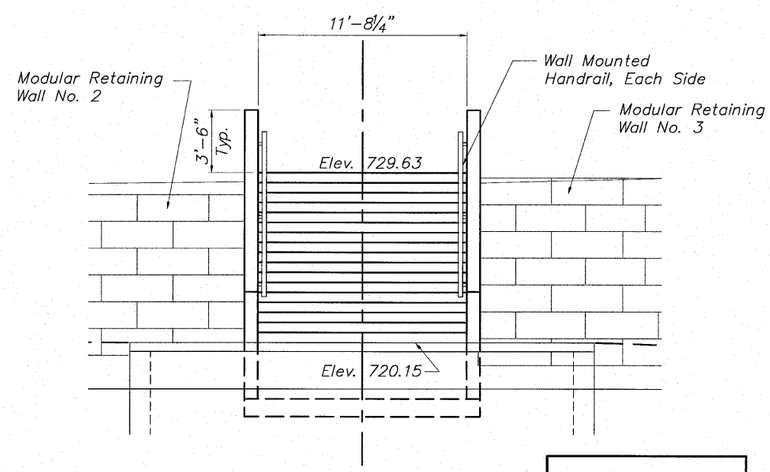

FRONT ELEVATION

INDEX OF STAIRWAY SHEETS

ALI A. GHARAATI
081-026060
LICENSED
STRUCTURAL ENGINEER OF MOLINE
STATE OF ILLINOIS

Signature

Date 9/7/10

SOUTH STAIRS AT OVERLOOK NO. 2
PLAN AND ELEVATION
PEDESTRIAN RIVERWALK
ALONG THE ROCK RIVER
WINNEBAGO COUNTY
SECTION NO. 06-00543-00-BT
STATION 208+17.78

DESIGNED	CTB
CHECKED	AAG
DRAWN	JAW
CHECKED	JWH

McClure Engineering Associates, Inc.
7282 Argus Drive Rockford, Illinois 61107-5837
(815) 398-2332 Fax (815) 398-2496
Design Firm License: Illinois#184-000816

SHEET NO. 1

5 SHEETS

F.A. RTE.	SECTION	COUNTY	TOTAL SHEETS	SHEET NO.
	06-00543-00-BT	WINNEBAGO	148	46
		CONTRACT NO.		85521
FED. ROAD DIST. NO.	ILLINOIS	FED. AID PROJECT		

STATE OF ILLINOIS
DEPARTMENT OF TRANSPORTATION

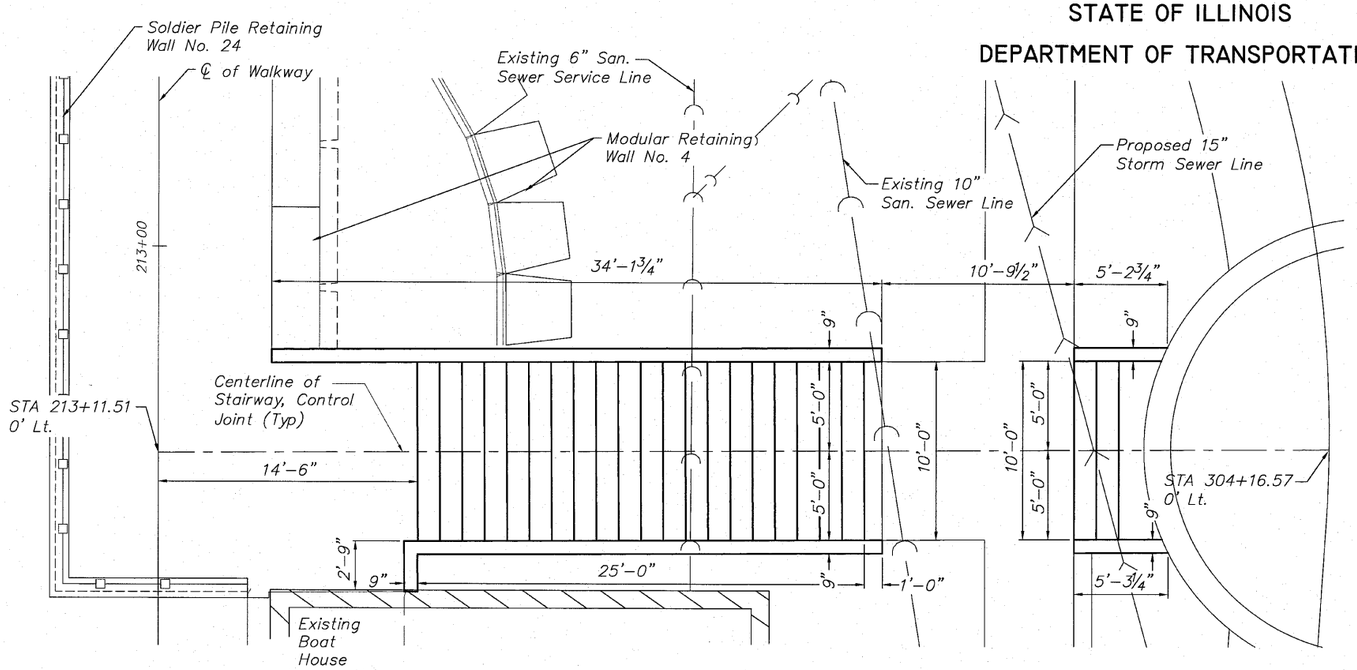

PLAN

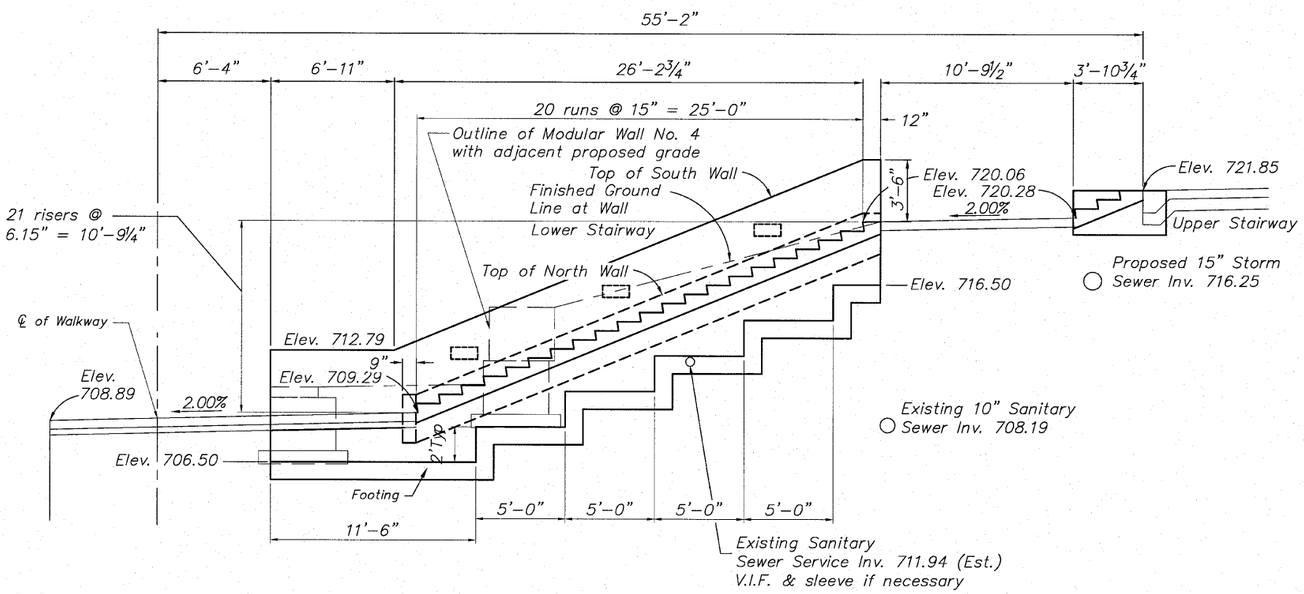

ELEVATION

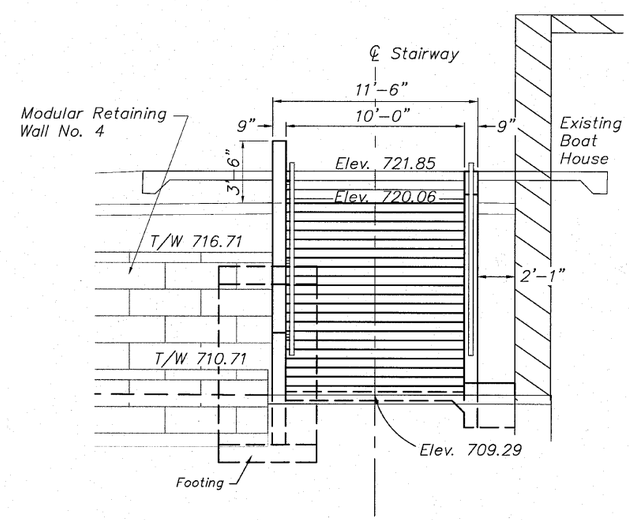

FRONT ELEVATION
SECTION B-B

NOTES:

1. It Shall be the responsibility of the Contractor to verify all dimensions and conditions existing in the field prior to construction and ordering materials.
2. The concrete shall be constructed as shown in accordance with Section 503 of the "Standard Specifications for Road and Bridge Construction".
3. All exposed edges of concrete walls shall have a ¾" x 45° chamfer, except as shown otherwise. Chamfers on vertical edges shall be continued a minimum of one foot below finished ground level.
4. Stair tread edges shall be protected with Balco, Inc Model P-200 or equal installed according to manufactures instructions.
5. Reinforcement bars shall all be epoxy coated.
6. See Landscape Architect sheet 137 for handrail detail.
7. Refer to Electrical Plan sheet 41 for lighting insets. Provide box-out in sidewalls for flush panels.
8. Stair Tread Nosings shall be installed in two halves to allow for a scored or sawed contraction joint along the centerline of the stairs. The joint shall be sealed with a premium polyurethane sealant in accordance with the Standard Specifications.

NORTH STAIRS AT BOAT HOUSE
PLAN AND ELEVATION
PEDESTRIAN RIVERWALK
ALONG THE ROCK RIVER
WINNEBAGO COUNTY
SECTION NO. 06-00543-00-BT
STATION 213+11.51

DESIGNED	CTB
CHECKED	AAG
DRAWN	JAW
CHECKED	JWH

McClure Engineering Associates, Inc.
7282 Argus Drive Rockford, Illinois 61107-5837
(815) 398-2332 Fax (815) 398-2496
Design Firm License: Illinois#184-000816

SHEET NO. 2
5 SHEETS

F.A. RTE.	SECTION	COUNTY	TOTAL SHEETS	SHEET NO.
	06-00543-00-BT	WINNEBAGO	148	47
		CONTRACT NO.		85521
FED. ROAD DIST. NO.	ILLINOIS	FED. AID PROJECT		

STATE OF ILLINOIS

DEPARTMENT OF TRANSPORTATION

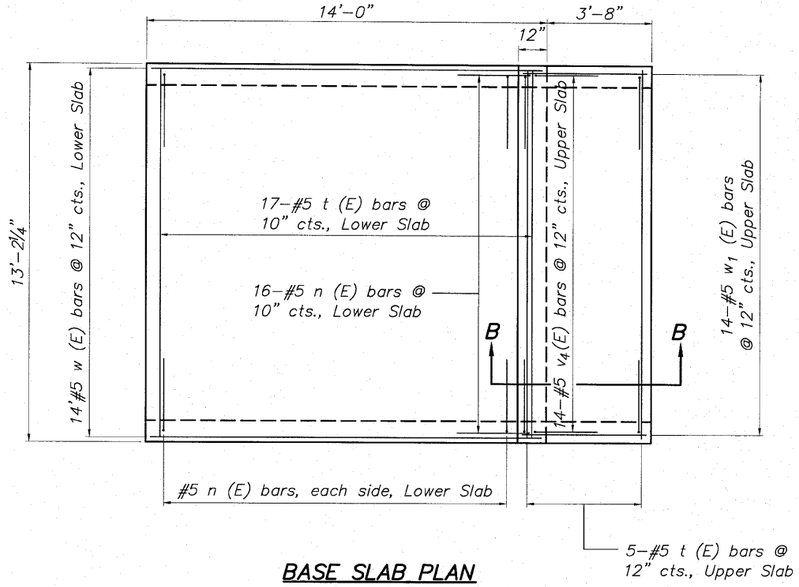

BASE SLAB PLAN Showing Reinforcement

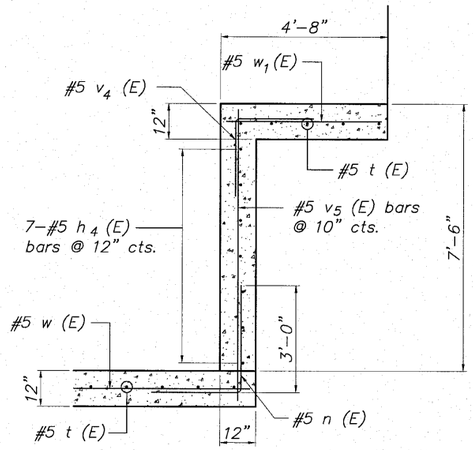

BACK WALL SECTION B-B

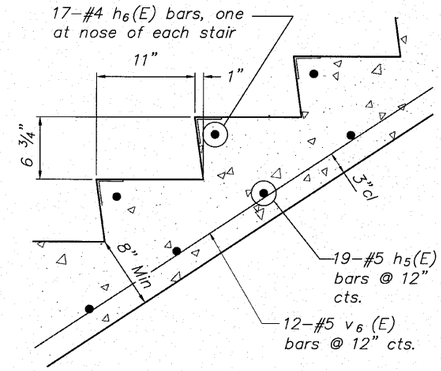

STAIR TREAD DETAIL SECTION C-C

not to scale

BILL OF MATERIALS

SOUTH STAIRS AT OUTLOOK No. 2

Bar	No.	Size	Length	Shape
h (E)	16	#5	12'-8"	
* h_1(E)	8	#5	15'-9"	
h_2(E)	48	#5	5'-0"	
h_3(E)	2	#5	19'-5"	
h_4(E)	7	#5	12'-10"	
h_5(E)	19	#5	11'-4"	
h_6(E)	17	#4	11'-4"	
n (E)	48	#5	5'-6"	
t (E)	22	#5	12'-10"	
v (E)	4	#5	6'-4"	
* v_1(E)	14	#5	19'-11"	
* v_2(E)	4	#5	14'-7"	
v_3(E)	2	#5	8'-4"	
v_4(E)	14	#5	4'-4"	
v_5(E)	16	#5	8'-2"	
v_6(E)	12	#5	17'-10"	
w (E)	14	#5	13'-8"	
w_1(E)	14	#5	4'-4"	
Concrete Structures			Cu. Yd.	29.4
Reinforcement Bars (Epoxy Coated)			Pound	2,740
Rubbed Finish			Sq. Ft.	319

Box out for lighting fixture. Coordinate with electrical Plan. (Typ.)

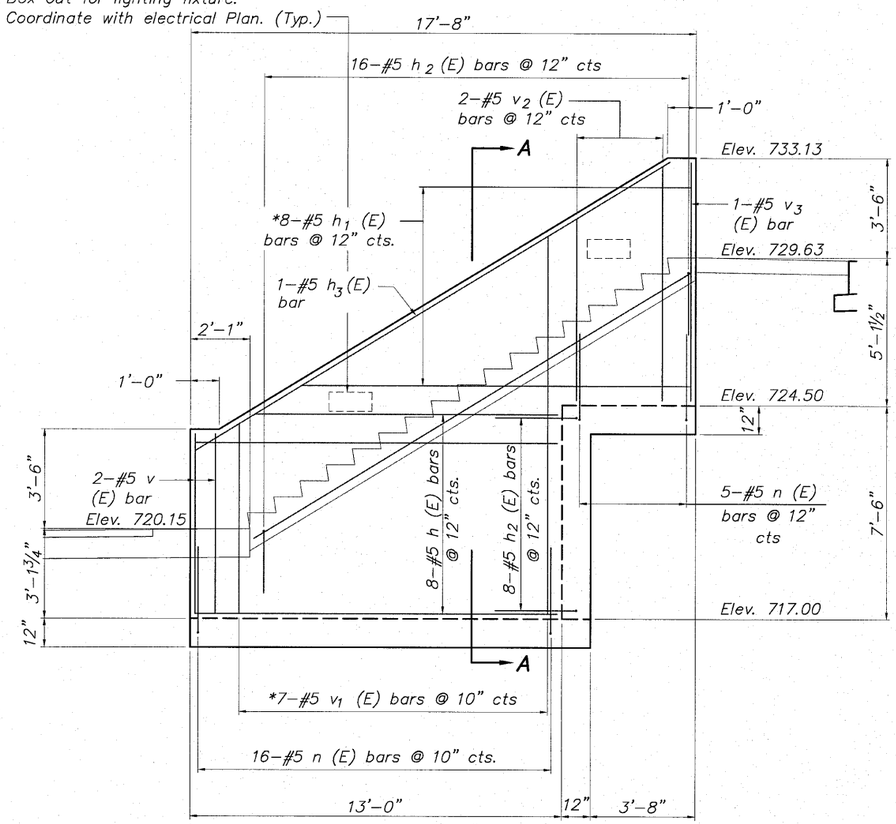

SIDEWALL ELEVATION Showing Reinforcement

* Order bars full length, cut and use remainder at opposite end of bar run, see cutting diagrams

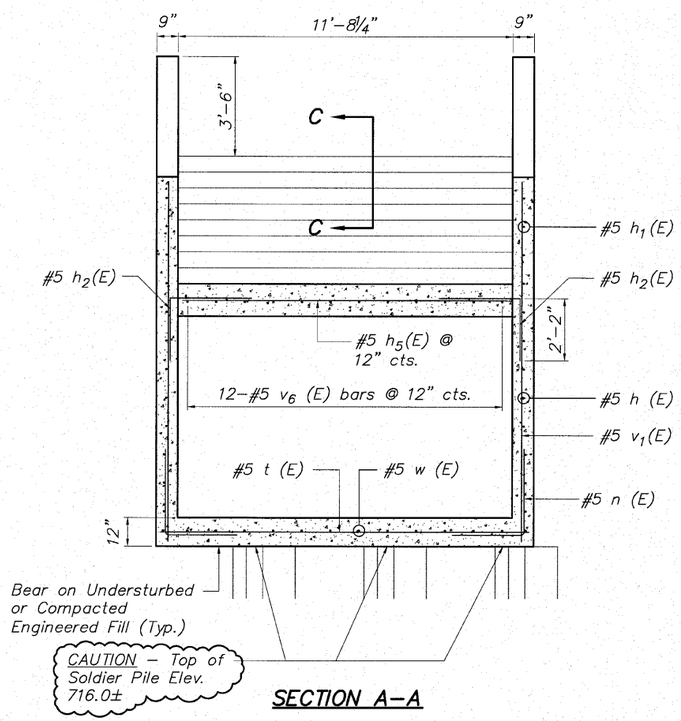

SECTION A-A

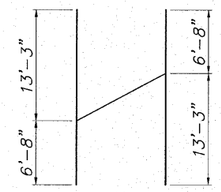

BAR v_1(E) Cutting Diagram

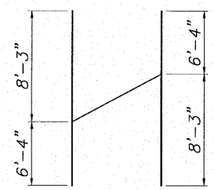

BAR v_2(E) Cutting Diagram

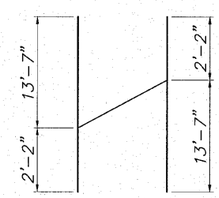

BAR h_1(E) Cutting Diagram

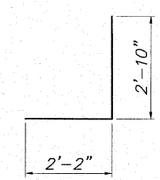

BAR h_2(E)

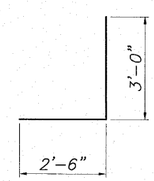

BAR n(E)

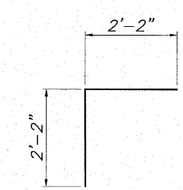

BAR v_4(E)

MINIMUM BAR LAP

No. 4 bars	1'-8"
No. 5 bars	2'-2"
No. 6 bars	2'-7"
No. 7 bars	3'-5"

SOUTH STAIRS AT OVERLOOK NO. 2 STAIRWAY DETAILS PEDESTRIAN RIVERWALK ALONG THE ROCK RIVER WINNEBAGO COUNTY SECTION NO. 06-00543-00-BT STATION 208+17.78

DESIGNED	CTB
CHECKED	AAG
DRAWN	JAW
CHECKED	JWH

McClure Engineering Associates, Inc.
7282 Argus Drive (815) 398-2332
Rockford, Illinois 61107-5837 Fax (815) 398-2496
Design Firm License: Illinois#184-000816

SHEET NO. 3

5 SHEETS

F.A. RTE.	SECTION	COUNTY	TOTAL SHEETS	SHEET NO.
	06-00543-00-BT	WINNEBAGO	148	48
		CONTRACT NO.		85521
FED. ROAD DIST. NO.	ILLINOIS	FED. AID PROJECT		

STATE OF ILLINOIS
DEPARTMENT OF TRANSPORTATION

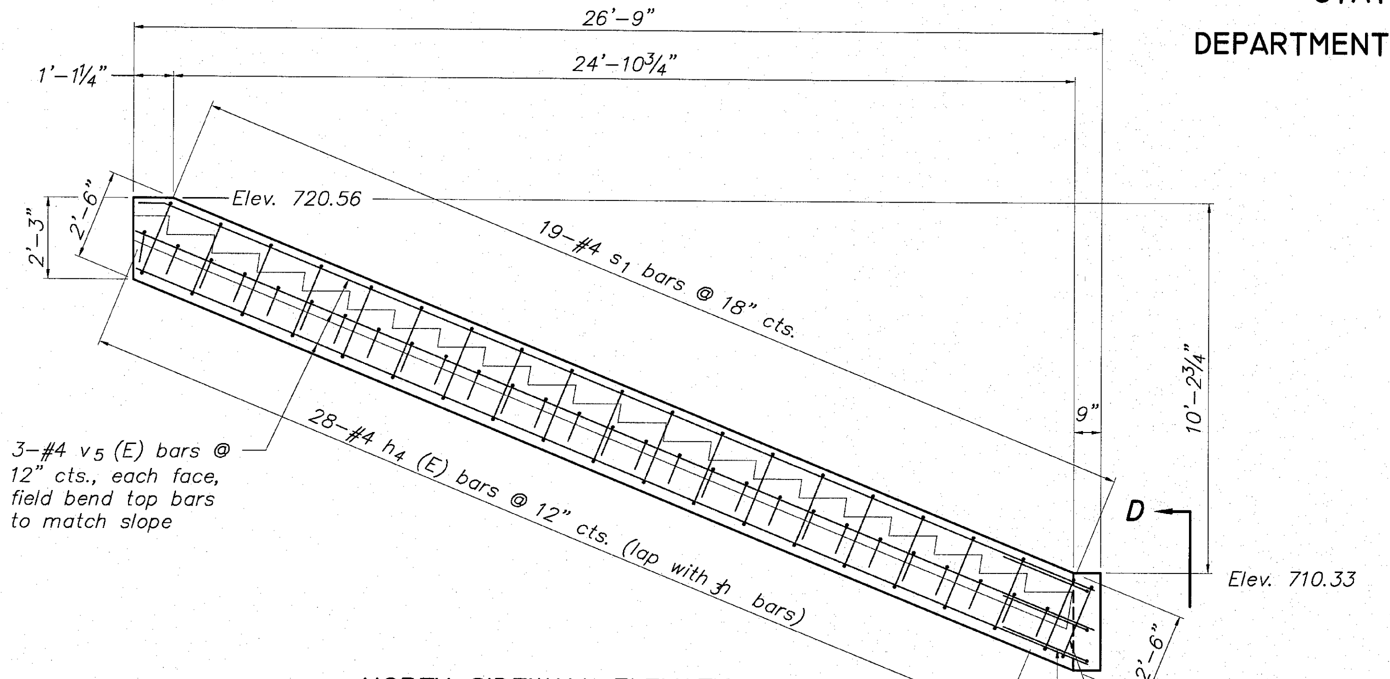

NORTH SIDEWALL ELEVATION
Looking North Showing
Reinforcement

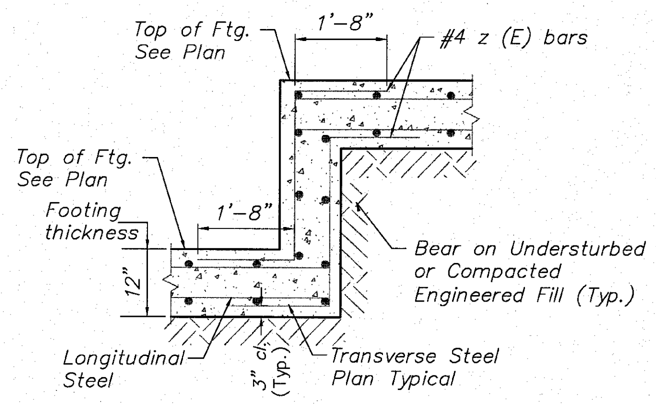

TYPICAL WALL FOOTING
STEP DETAIL

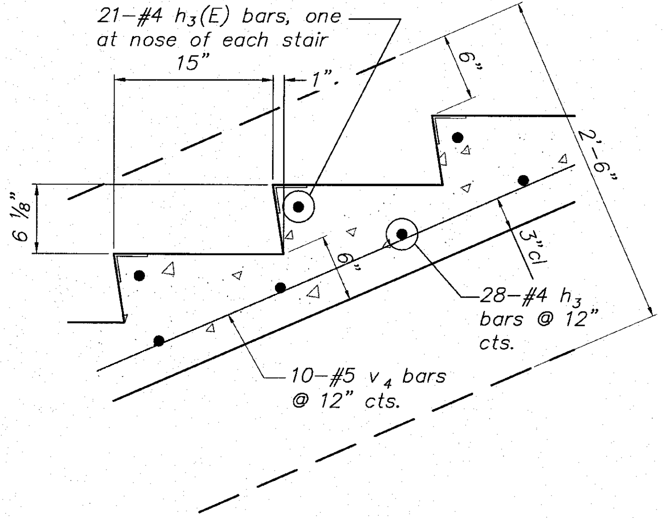

STAIR TREAD DETAIL
not to scale

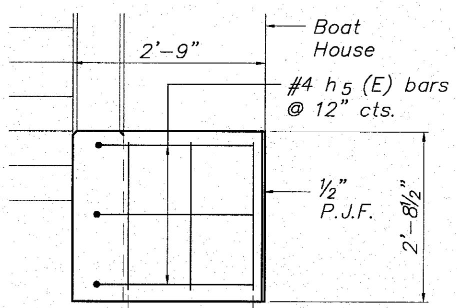

ELEVATION D-D

* Order bars full length, cut 5 bars and use remainder at opposite end of opposite face, see cutting diagrams

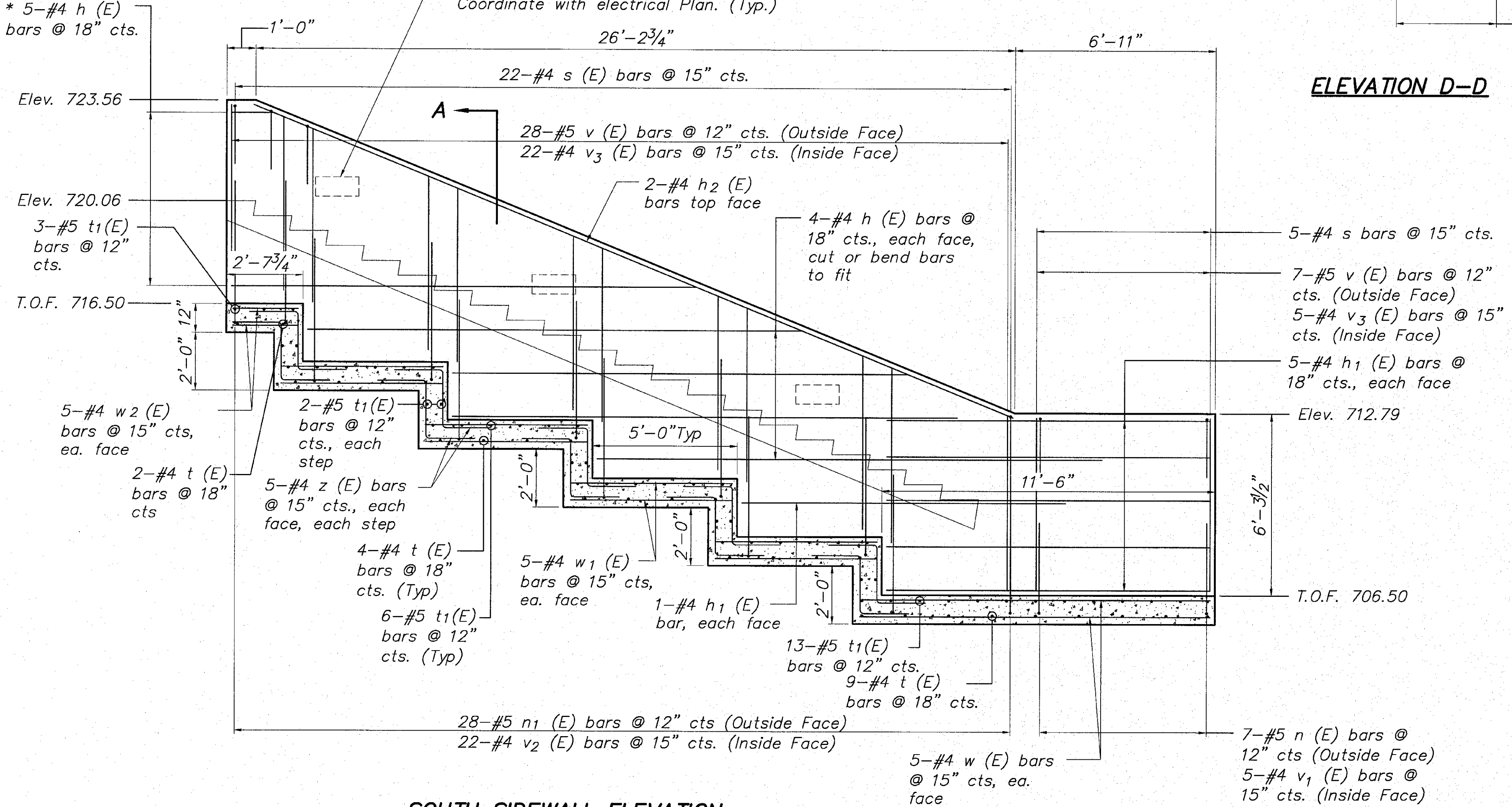

SOUTH SIDEWALL ELEVATION
Looking North Showing
Reinforcement

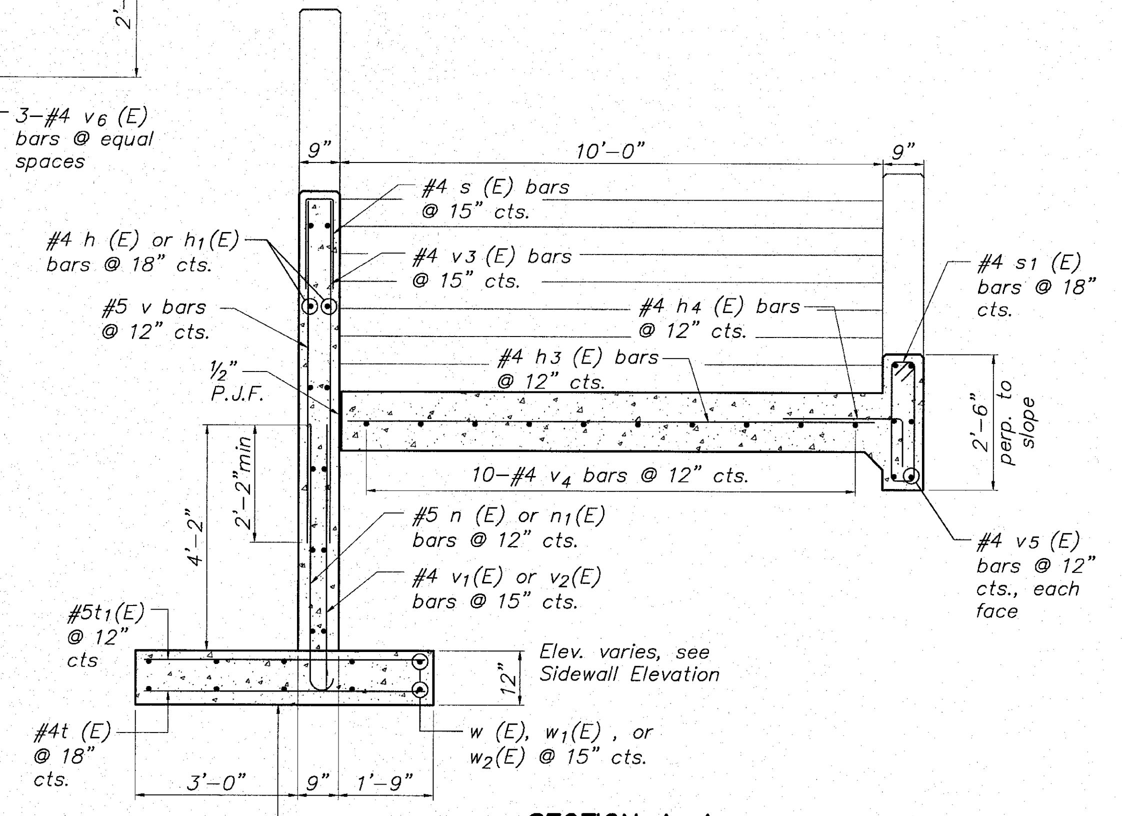

SECTION A-A
not to scale

NORTH STAIRS AT BOAT HOUSE
STAIRWAY DETAILS
PEDESTRIAN RIVERWALK
ALONG THE ROCK RIVER
WINNEBAGO COUNTY
SECTION NO. 06-00543-00-BT
STATION 213+11.51

DESIGNED	CTB
CHECKED	AAG
DRAWN	JAW
CHECKED	JWH

McClure
Engineering Associates, Inc.
7282 Argus Drive Rockford, Illinois 61107-5837
(815) 398-2332 Fax (815) 398-2496
Design Firm License: Illinois#184-000816

SHEET NO. 4
5 SHEETS

F.A. RTE.	SECTION	COUNTY	TOTAL SHEETS	SHEET NO.
	06-00543-00-BT	WINNEBAGO	148	49
		CONTRACT NO.		85521
FED. ROAD DIST. NO.	ILLINOIS	FED. AID PROJECT		

06 Riverwalk Museum\DESIGN\DRAWINGS\STRUCTURAL\GP&E\06-008 StairsGP&E.dwg, NORTH STAIRS DETAILS (2), 8/30/2010 3:40:04 PM,
Oce D+ 24x36 in (Portrait), 1:1

STATE OF ILLINOIS

DEPARTMENT OF TRANSPORTATION

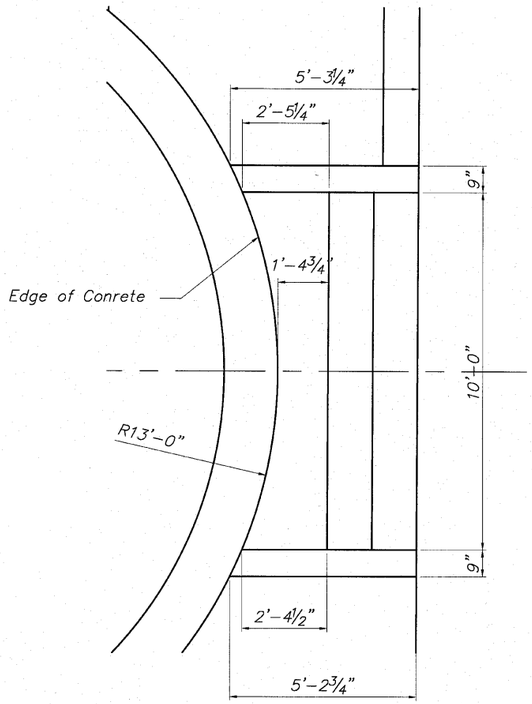

UPPER STAIRWAY PLAN

not to scale

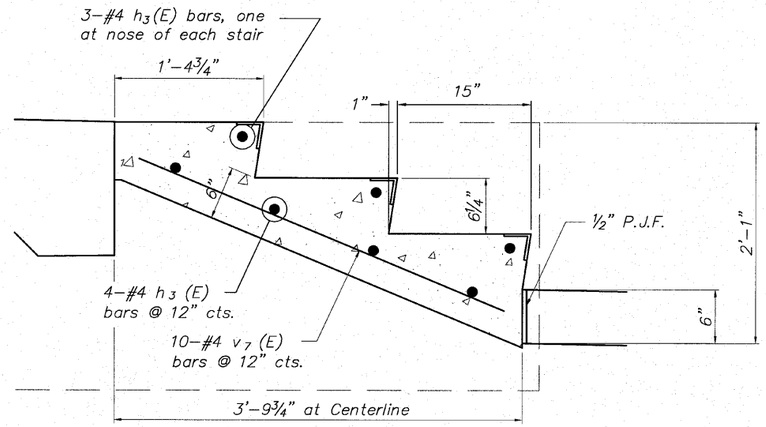

STAIR TREAD DETAIL

not to scale

MINIMUM BAR LAP

No. 4 bars	1'-8"
No. 5 bars	2'-2"
No. 6 bars	2'-7"
No. 7 bars	3'-5"

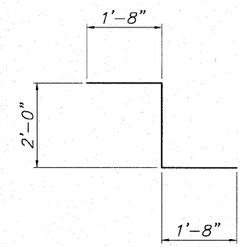

BAR z (E)

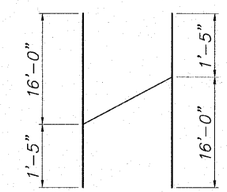

BAR h (E) Cutting Diagram

BILL OF MATERIALS

NORTH STAIRS AT BOAT HOUSE

Bar	No.	Size	Length	Shape
* h (E)	13	#4	17'-5"	
h_1(E)	12	#4	11'-2"	
h_2(E)	2	#4	28'-4"	
h_3(E)	56	#4	9'-8"	
h_4(E)	36	#4	3'-3"	
h_5(E)	3	#4	4'-8"	
h_6(E)	12	#4	4'-10"	
n (E)	7	#5	3'-9"	
n_1(E)	28	#5	5'-6"	
S (E)	27	#4	3'-9"	
S_1(E)	28	#4	5'-9"	
t (E)	27	#4	5'-2"	
t_1(E)	50	#5	5'-2"	
v (E)	35	#5	6'-4"	
v_1(E)	5	#4	3'-2"	
v_2(E)	22	#4	4'-11"	
v_3(E)	27	#4	6'-0"	
v_4(E)	10	#4	27'-7"	
v_5(E)	6	#4	28'-2"	
v_6(E)	3	#4	2'-3"	
v_7(E)	10	#4	3'-8"	
w (E)	10	#4	12'-1"	
w_1(E)	40	#4	5'-7"	
w_2(E)	10	#4	2'-3"	
z (E)	50	#4	5'-4"	
Concrete Structures			Cu. Yd.	20.9
Reinforcement Bars (Epoxy Coated)			Pound	2,665
Rubbed Finish			Sq. Ft.	415

* Order bars full length, cut 5 bars and use remainder at opposite end of opposite face, see cutting diagrams

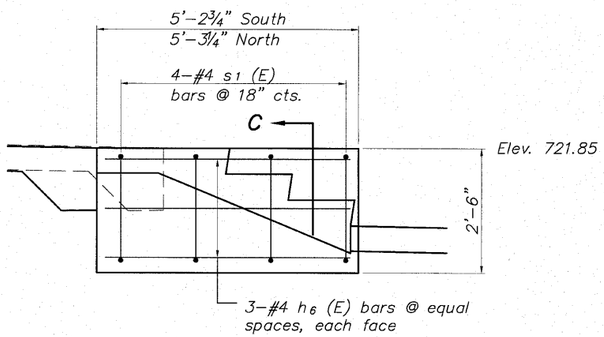

SIDEWALL ELEVATION Looking North Showing Reinforcement

not to scale

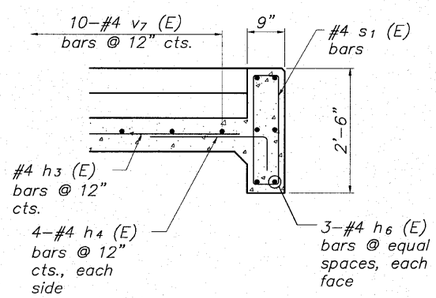

PARTIAL SECTION C-C

not to scale

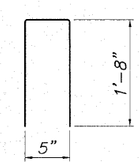

BAR s (E)

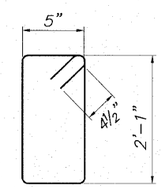

BAR s_1(E)

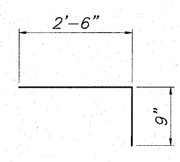

BAR h_4(E)

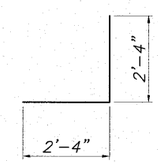

BAR h_5(E)

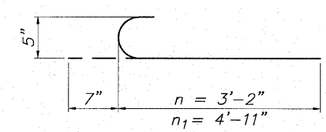

BAR n (E) & n_1(E)

NORTH STAIRS AT BOAT HOUSE STAIRWAY DETAILS PEDESTRIAN RIVERWALK ALONG THE ROCK RIVER WINNEBAGO COUNTY SECTION NO. 06-00543-00-BT STATION 213+11.51

DESIGNED	CTB
CHECKED	AAG
DRAWN	JAW
CHECKED	JWH

McClure Engineering Associates, Inc.
7282 Argus Drive, Rockford, Illinois 61107-5837
(815) 398-2332, Fax (815) 398-2496
Design Firm License: Illinois#184-000816

SHEET NO. 5	F.A. RTE.	SECTION	COUNTY	TOTAL SHEETS	SHEET NO.
5 SHEETS		06-00543-00-BT	WINNEBAGO	148	50
			CONTRACT NO.		85521
	FED. ROAD DIST. NO.	ILLINOIS	FED. AID PROJECT		

STATE OF ILLINOIS

DEPARTMENT OF TRANSPORTATION

BENCHMARK

NO.	DESCRIPTION	ELEVATION
BM 304	NE Bonnet Bolt on top flange of Fire Hydrant North of Fisher Ave. on West side of N. Main St. across from North Entrance to Burpee Museum 31+97, 61'Lt.	732.70

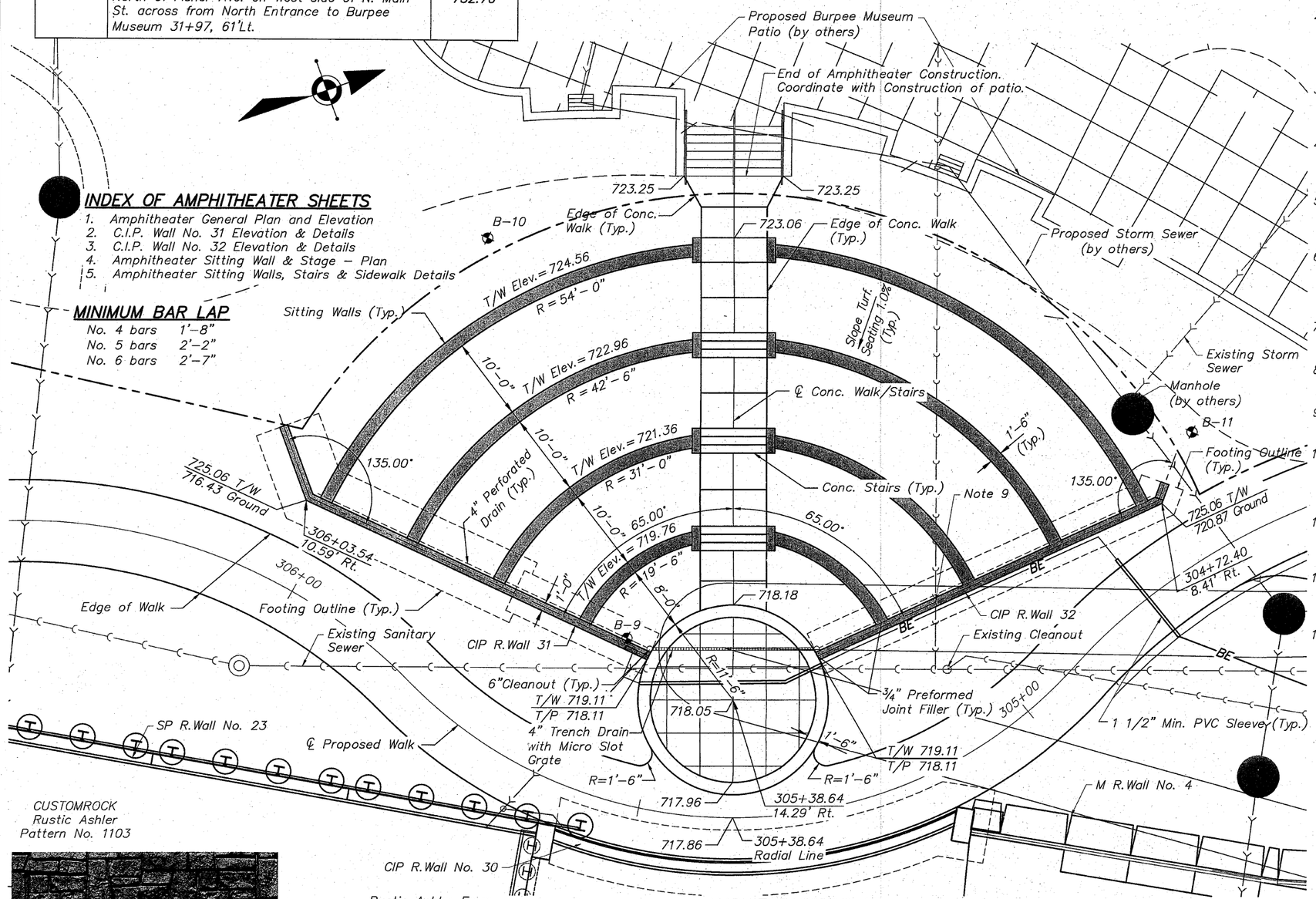

INDEX OF AMPHITHEATER SHEETS

1. Amphitheater General Plan and Elevation
2. C.I.P. Wall No. 31 Elevation & Details
3. C.I.P. Wall No. 32 Elevation & Details
4. Amphitheater Sitting Wall & Stage – Plan
5. Amphitheater Sitting Walls, Stairs & Sidewalk Details

MINIMUM BAR LAP

No. 4 bars	1'-8"
No. 5 bars	2'-2"
No. 6 bars	2'-7"

CUSTOMROCK
Rustic Ashler
Pattern No. 1103

FORM LINER

AMPHITHEATER PLAN

no scale

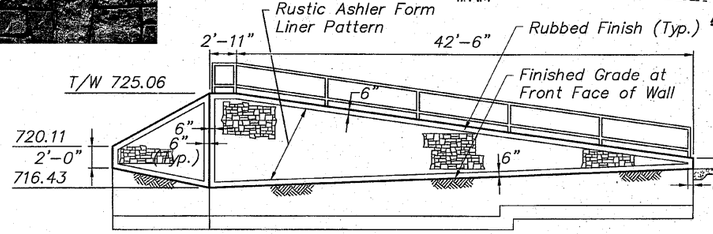

CIP R.WALL NO. 31 ELEVATION

Facing West — no scale

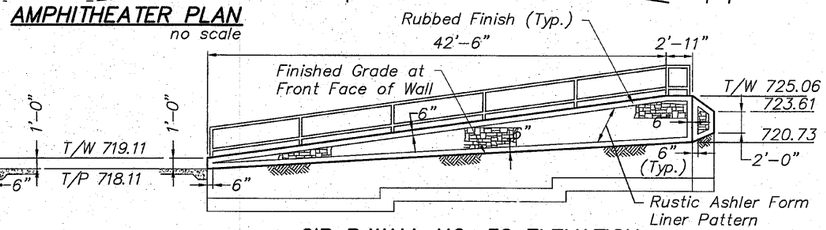

CIP R.WALL NO. 32 ELEVATION

Facing West — no scale

NOTES:

1. It Shall be the responsibility of the Contractor to verify all dimensions and conditions existing in the field prior to construction and ordering materials.
2. The concrete for walls and structures shall be Type SI and shall be constructed as shown in accordance with Section 503 and the concrete for Sidewalks and Sidewalks (Spl) shall be Type SI in accordance with Section 424 of the IDOT "Standard Specifications for Road and Bridge Construction".
3. All exposed edges shall have a 3/4" x 45° chamfer, except as shown otherwise. Chamfers on vertical edges shall be continued a minimum of one foot below finished ground level.
4. Exposed surfaces of concrete shall be given a "rubbed finish" except where form liner is specified. Exposed Surfaces of Stairs and Sidewalks to be given a brush finish in accordance with art. 424.06 of the Standard Specifications
5. Stair tread edges shall be protected with Balco, Inc., Style P-200 or equal installed according to manufacture's instructions. Safety Stair Nosings will not be paid for separately but shall be included in the cost of the concrete.
6. Reinforcing bars shall be lapped a minimum as shown below where splices occur. Radius bars shall be factory bent and delivered to the site with appropriate radius. Field bending will only be allowed to achieve form clearances.
7. Curved exposed edges shall be finished with an edging tool with a 3/4" radius (bullnose detail) versus a 3/4" 45° chamfer.
8. Form liner treatment where specified shall be Customrock, Rustic Ashler pattern (1" relief) or approved equal.
9. Provide sleeve for wall penetration if necessary to avoid conflict with sanitary service. Cost of the sleeve to be included in the cost of Class MS concrete.
10. Quantities shown on Bill of Materials does not include Concrete Walking Path, R Wall No. 30, Furnished Excavation, Top Soil, Seeding, Trench Drain, or Electrical that is shown on this plan. Refer to schedule of quantity sheets for these items.
11. Handrail to be placed on top of walls 31 & 32 is to be furnished and installed in this contract. Coordinate installation with handrail contractor. See Sheet 132 for details.
12. Cost for the Thickened Edge of the Sidewalk (Spl) and the reinforcement bars included within, will be paid for separately and shall be included in the contract price per sq. ft. for PC Concrete Sidewalk 6" SP.
13. Coordinate installation of electrical components with electrical plans.

ALI A. GHARAMITI
081-005680
LICENSED STRUCTURAL ENGINEER OF MOLINE
STATE OF ILLINOIS

Signature

9/2/10
Date

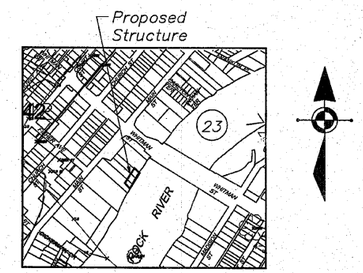

Section 23, Township 44 North, Range 1 East of the 3rd Principal Meridian

LOCATION SKETCH

BORING NUMBER	STATION	OFFSET	GROUND ELEV.	EST. ROCK ELEV.
B-9	305+59	19.3' RT	716	706
B-10	306+00	49.0' RT	720	710
B-11	304+66	14.1' RT	721	705

DESIGN STRESSES
FIELD UNITS

f'c = 3,500 psi
fy = 60,000 psi (Reinforcement)

GENERAL PLAN & ELEVATION
RIVERWALK AMPHITHEATER
WINNEBAGO COUNTY
SECTION NO. 06-00543-00-BT
STATION 305+38.64

DESIGNED	CTB
CHECKED	AAG
DRAWN	JAW
CHECKED	JWH

McClure Engineering Associates, Inc.
7282 Argus Drive (815) 398-2332
Rockford, Illinois 61107-5837 Fax (815) 398-2496
Design Firm License: Illinois/184-000816

SHEET NO. 1
5 SHEETS

F.A. RTE.	SECTION	COUNTY	TOTAL SHEETS	SHEET NO.
	06-00543-00-BT	WINNEBAGO	148	51
		CONTRACT NO.		85521
FED. ROAD DIST. NO.	ILLINOIS	FED. AID PROJECT		

STATE OF ILLINOIS
DEPARTMENT OF TRANSPORTATION

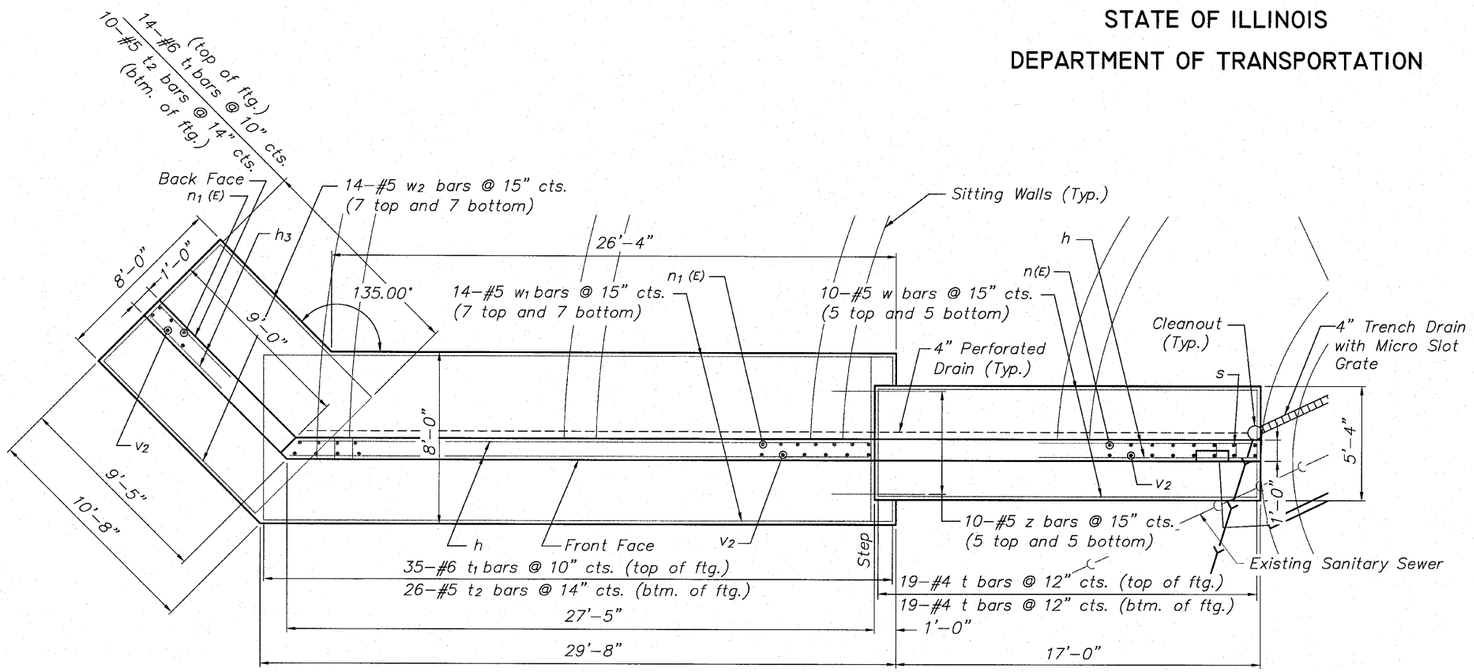

CIP R.WALL 31 PLAN DETAIL
not to scale

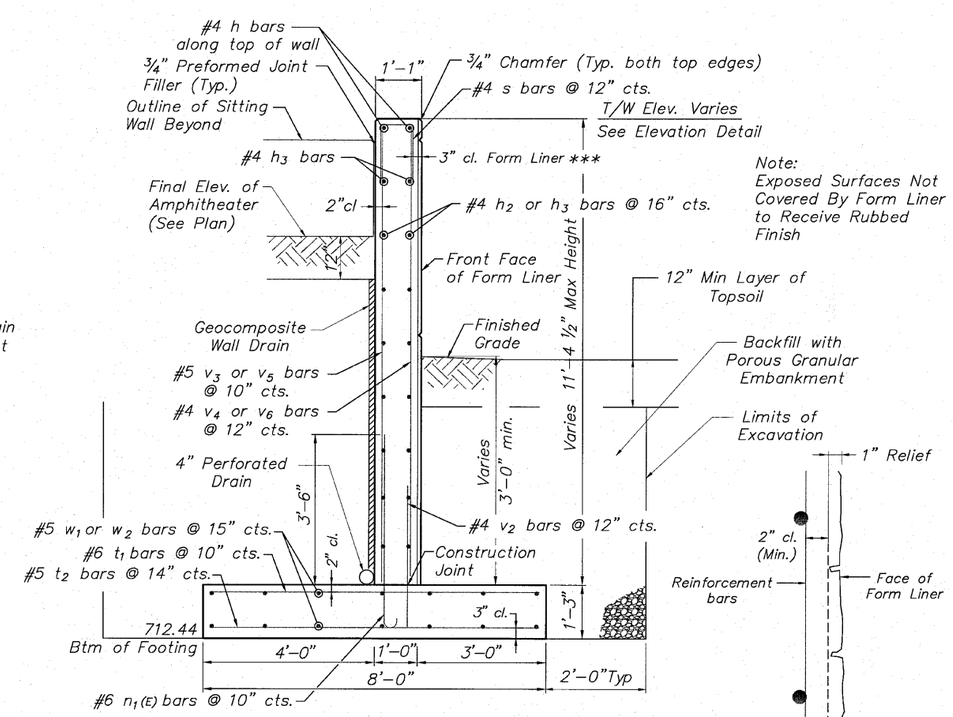

SECTION G–G
not to scale

*** FORM LINER DETAIL

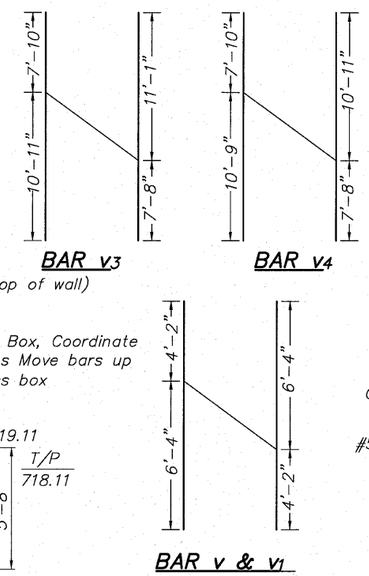

BAR v3 BAR v4 BAR v & v1

BAR CUT DIAGRAMS

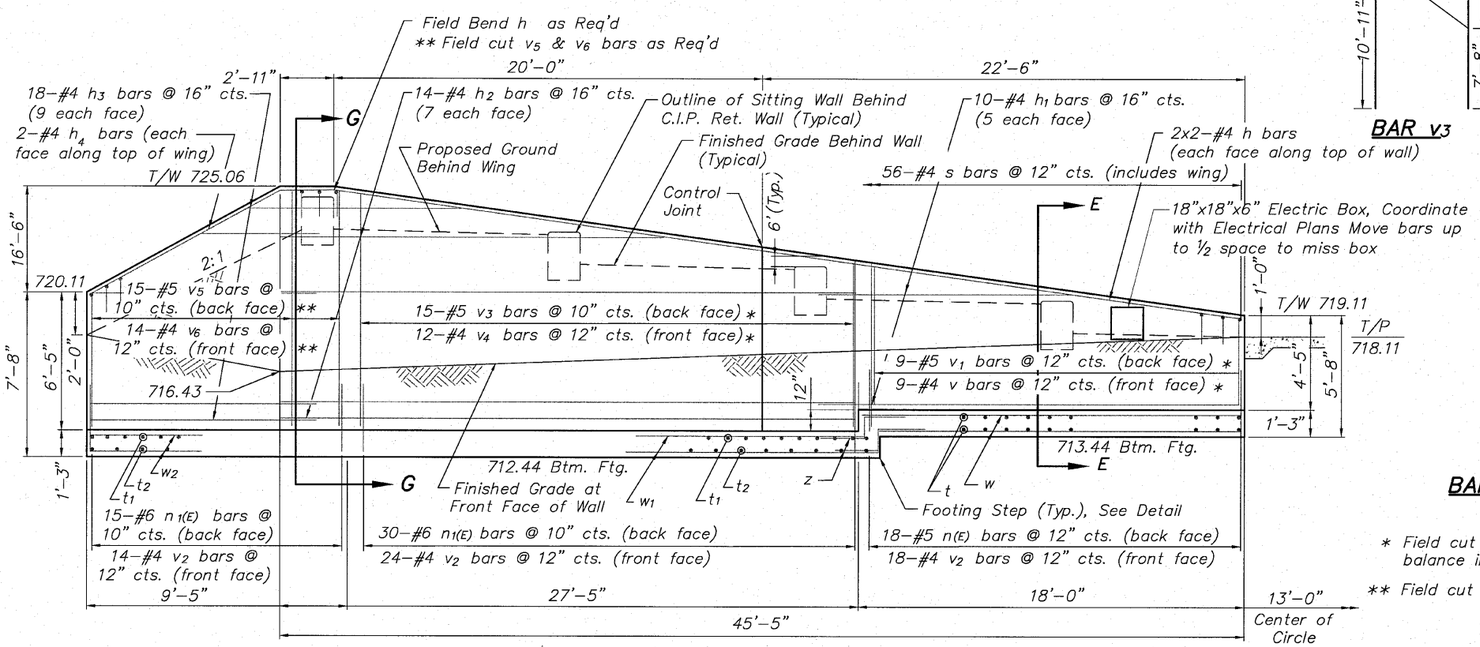

CIP R.WALL 31 ELEVATION DETAIL
not to scale

* Field cut bars & use remaining balance in opposite end.

** Field cut bar(s) to fit

BILL OF MATERIAL
Refer to Next Sheet

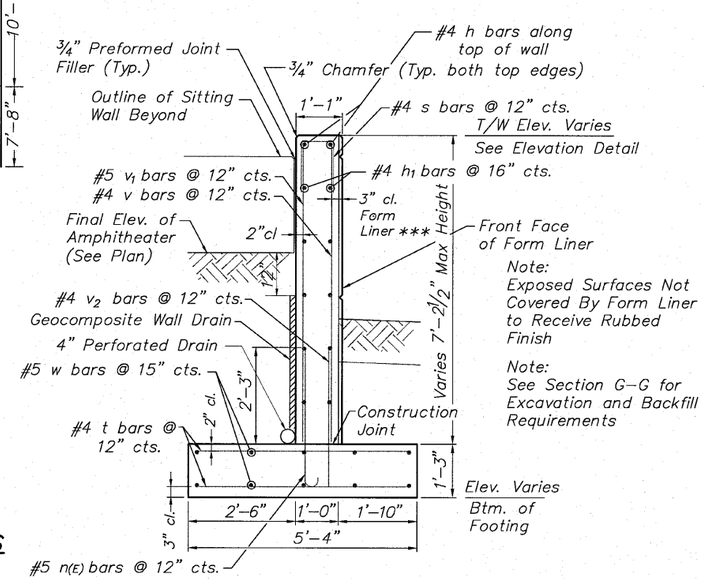

SECTION E–E
not to scale

C.I.P. WALL No. 31
ELEVATION & DETAILS
RIVERWALK AMPHITHEATER
WINNEBAGO COUNTY
SECTION NO. 06–00543–00–BT
STATION 305+38.64

DESIGNED	CTB
CHECKED	AAG
DRAWN	JAW
CHECKED	JWH

McClure Engineering Associates, Inc.
7282 Argus Drive (815) 398–2332
Rockford, Illinois 61107–5837 Fax (815) 398–2496
Design Firm License: Illinois#184–000816

SHEET NO. 2
5 SHEETS

F.A. RTE.	SECTION	COUNTY	TOTAL SHEETS	SHEET NO.
	06-00543-00-BT	WINNEBAGO	148	52
		CONTRACT NO.		85521

FED. ROAD DIST. NO.	ILLINOIS	FED. AID PROJECT

STATE OF ILLINOIS
DEPARTMENT OF TRANSPORTATION

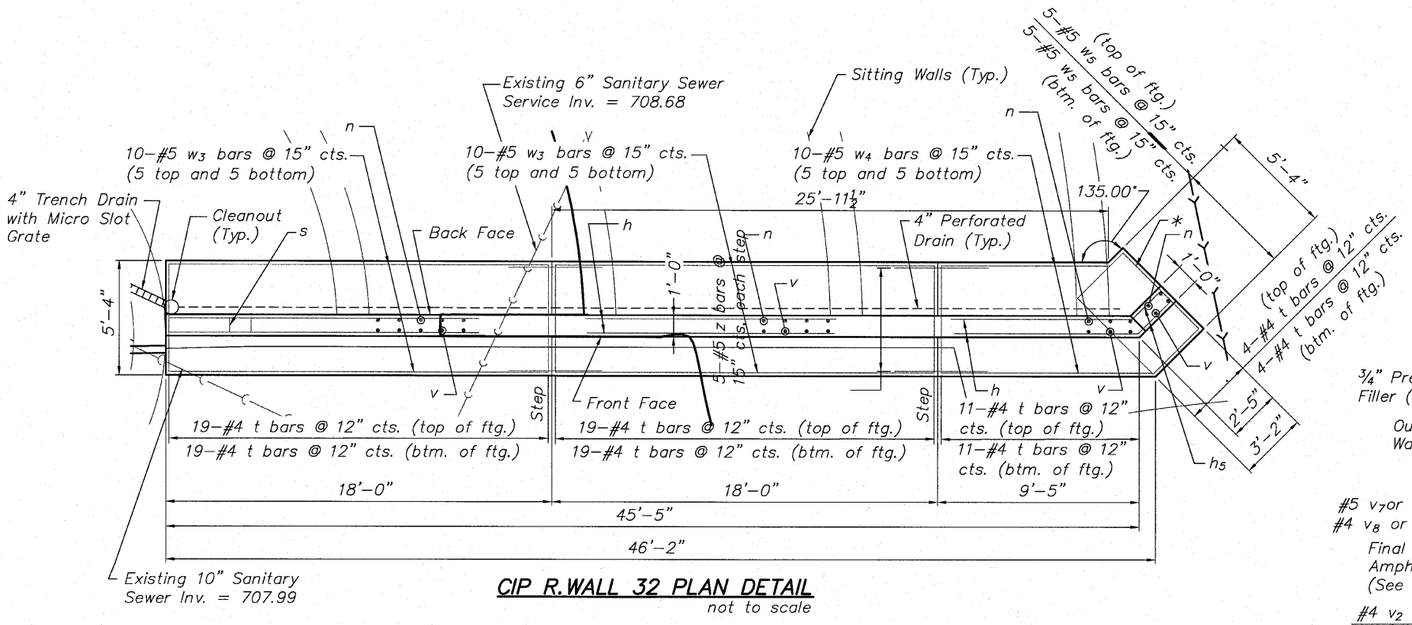

CIP R.WALL 32 PLAN DETAIL
not to scale

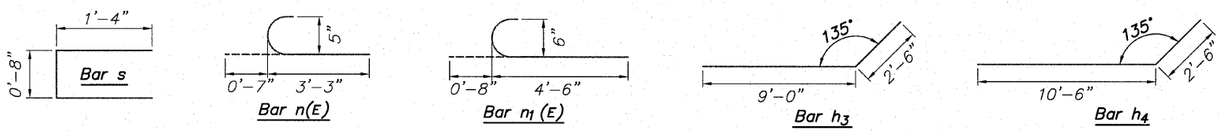

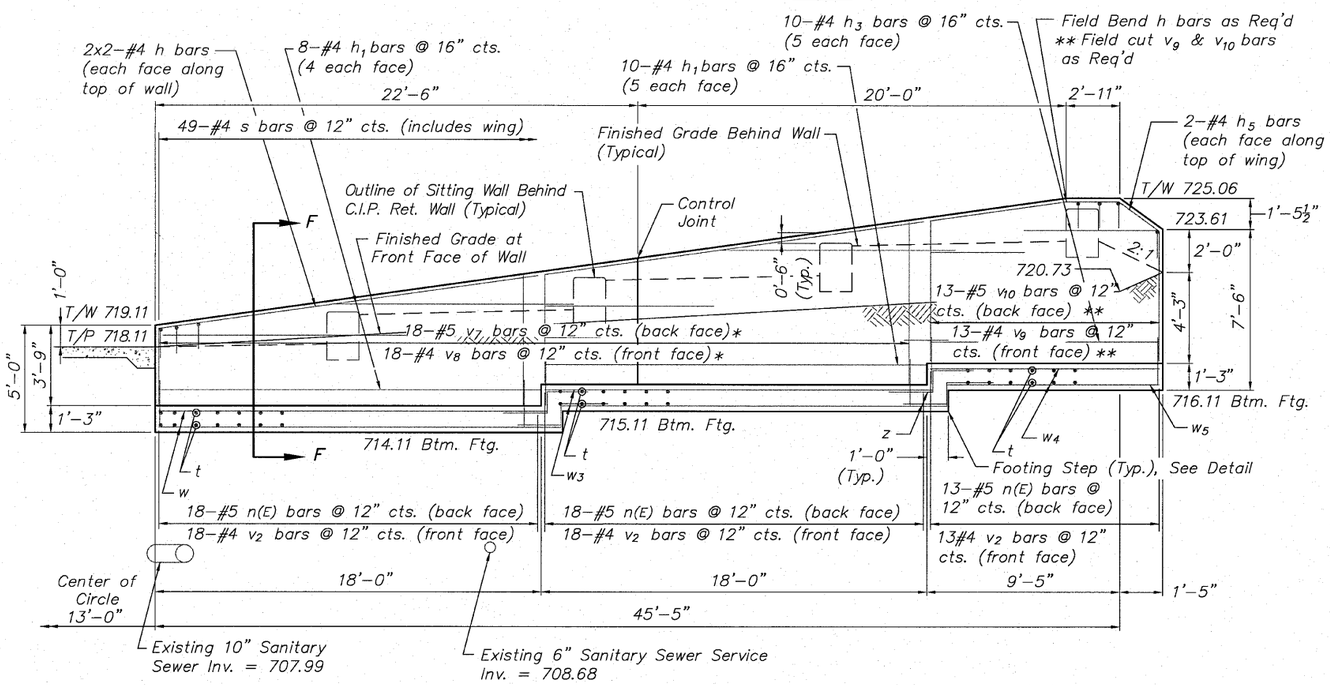

CIP R.WALL 32 ELEVATION DETAIL
not to scale

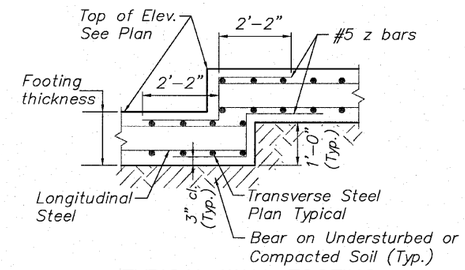

TYPICAL WALL FOOTING STEP DETAIL

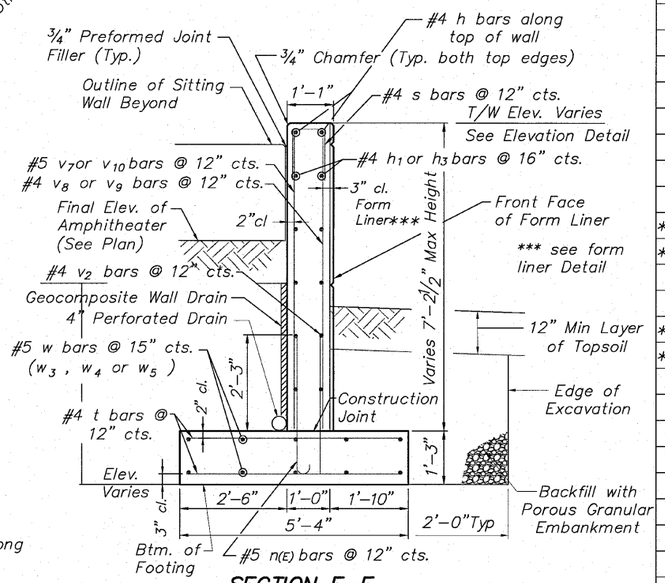

SECTION F-F
not to scale

Note:
Exposed Surfaces Not Covered By Form Liner to Receive Rubbed Finish

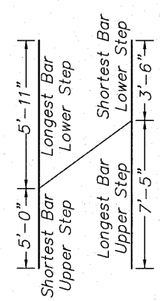

BAR v7 & v8 CUT DIAGRAM

* Field cut bars & use remaining balance in opposite end.

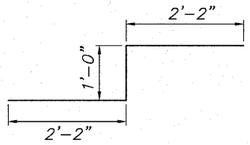

Bar z

BILL OF MATERIALS
For Wall 31 and Wall 32

Bar	No.	Size	Length	Shape
h	8	#4	23'-8"	
* h1	28	#4	19'-8"	
* h2	14	#4	27'-0"	
* h3	28	#4	11'-6"	
* h4	2	#4	13'-0"	
* h5	2	#4	5'-2"	
n(E)	67	#5	3'-10"	
n(E)1	45	#6	5'-2"	
s	105	#4	3'-4"	
t	144	#4	5'-0"	
t1	49	#6	7'-8"	
t2	36	#5	7'-8"	
* v	9	#4	10'-9"	
* v1	9	#5	10'-9"	
v2	105	#4	3'-3"	
* v3	15	#5	18'-9"	
* v4	12	#4	18'-7"	
** v5	15	#5	11'-1"	
** v6	14	#4	11'-1"	
* v7	18	#5	10'-11"	
* v8	18	#4	10'-11"	
** v9	18	#4	7'-6"	
** v10	18	#5	7'-6"	
w	10	#5	17'-8"	
w1	14	#5	29'-4"	
w2	14	#5	10'-4"	
w3	20	#5	18'-8"	
w4	10	#5	9'-8"	
w5	10	#5	3'-0"	
z	30	#5	5'-4"	
Class SI Concrete		Cu. Yd.	60.0	
Reinforcement Bars		Pound	5,265	
Reinforcement Bars (Epoxy Coated)		Pound	617	
Form Liner-1" Ashler		Sq. Ft.	299.4	
4" Perforated Drain		Foot	88	
Rubbed Finish		Sq. Ft.	384.5	
POROUS GRANULAR EMBANKMENT		Cu. Yd.	162.2	
GEOCOMPOSITE WALL DRAIN		Sq. Yd.	49.9	

** Field cut bar(s) to fit

C.I.P. WALL No. 32
ELEVATION & DETAILS
RIVERWALK AMPHITHEATER
WINNEBAGO COUNTY
SECTION NO. 06-00543-00-BT
STATION 305+38.64

DESIGNED	CTB
CHECKED	AAG
DRAWN	JAW
CHECKED	JWH

- 2010
EXAMINED
ENGINEER OF BRIDGE DESIGN
PASSED
ENGINEER OF BRIDGES AND STRUCTURES

McClure Engineering Associates, Inc.
7282 Argus Drive (815) 398-2332
Rockford, Illinois 61107-5837 Fax (815) 398-2496
Design Firm License: Illinois#184-000816

SHEET NO. 3
5 SHEETS

F.A. RTE.	SECTION	COUNTY	TOTAL SHEETS	SHEET NO.
	06-00543-00-BT	WINNEBAGO	148	53
		CONTRACT NO.		85521
FED. ROAD DIST. NO.	ILLINOIS	FED. AID PROJECT		

STATE OF ILLINOIS
DEPARTMENT OF TRANSPORTATION

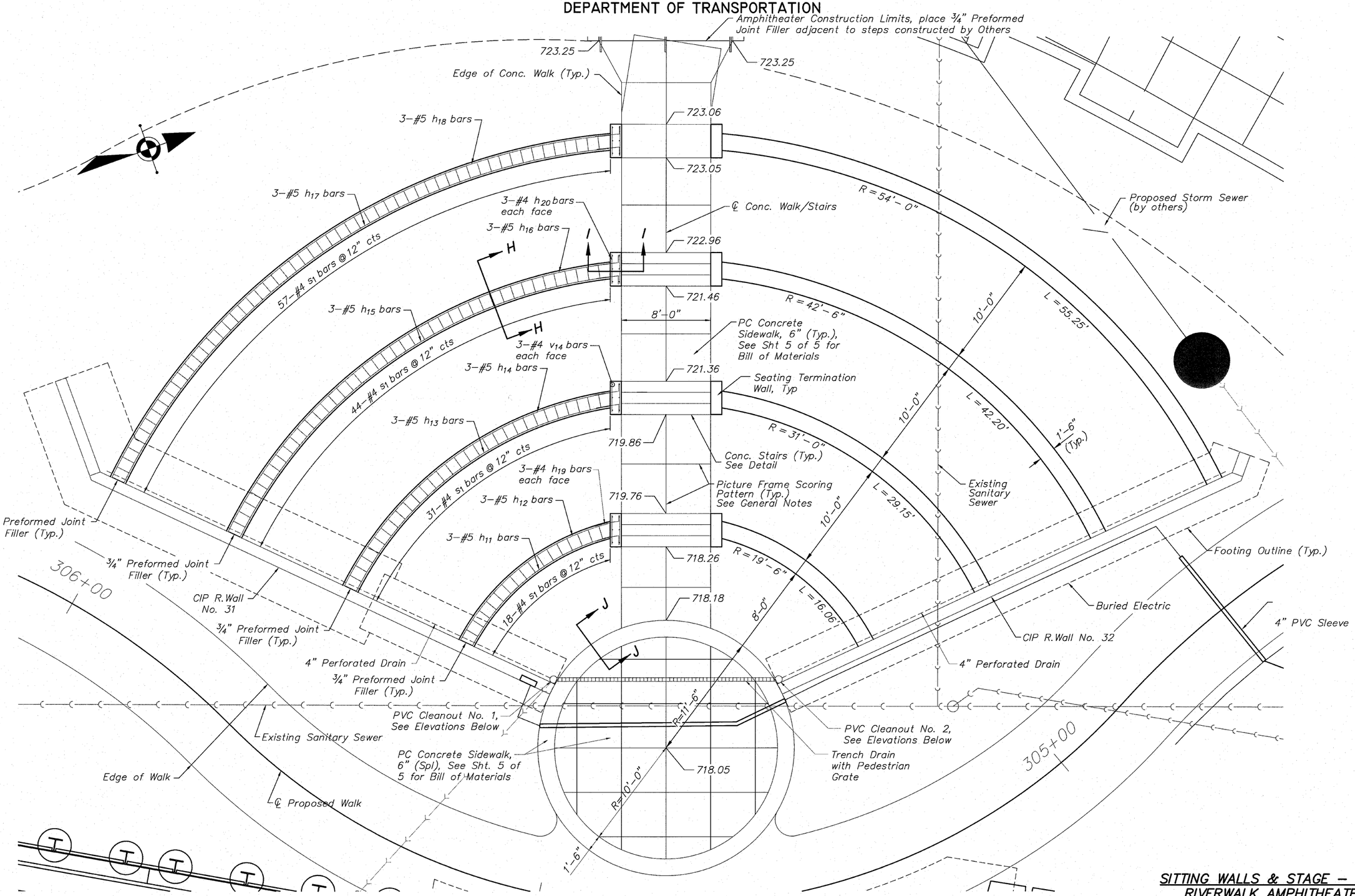

SHOWING REINFORCEMENT

SHOWING OUTLINES

AMPHITHEATER PLAN – SITTING WALLS

no scale

PVC CLEANOUT ELEVATIONS

Cleanout No. 1
Trench = 715.40
Perf Pipe = 716.00
6" Outlet = 714.20

Cleanout No. 2
Trench = 715.90
Perf Pipe = 716.00

SITTING WALLS & STAGE – PLAN
RIVERWALK AMPHITHEATER
WINNEBAGO COUNTY
SECTION NO. 06–00543–00–BT
STATION 305+38.64

DESIGNED	CTB
CHECKED	AAG
DRAWN	JAW
CHECKED	JWH

McClure Engineering Associates, Inc.
7282 Argus Drive, Rockford, Illinois 61107–5837
(815) 398–2332, Fax (815) 398–2496
Design Firm License: Illinois#184–000816

SHEET NO. 4
5 SHEETS

F.A. RTE.	SECTION	COUNTY	TOTAL SHEETS	SHEET NO.
	06-00543-00-BT	WINNEBAGO	148	54
		CONTRACT NO.		85521

FED. ROAD DIST. NO. | ILLINOIS | FED. AID PROJECT

STATE OF ILLINOIS
DEPARTMENT OF TRANSPORTATION

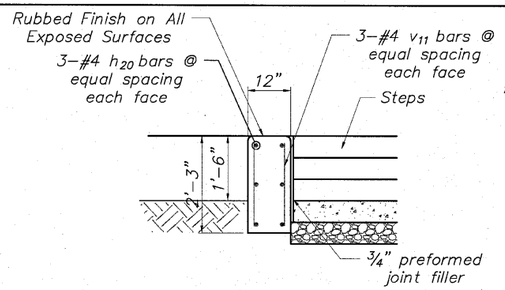

SECTION I–I
not to scale

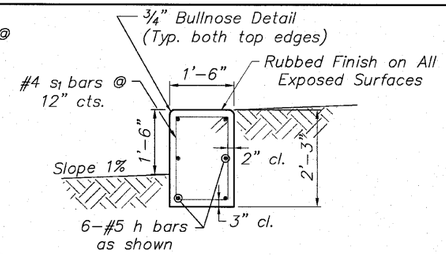

SECTION H–H
not to scale

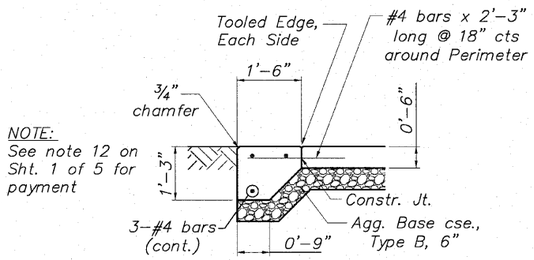

NOTE:
See note 12 on Sht. 1 of 5 for payment

SECTION J–J
not to scale

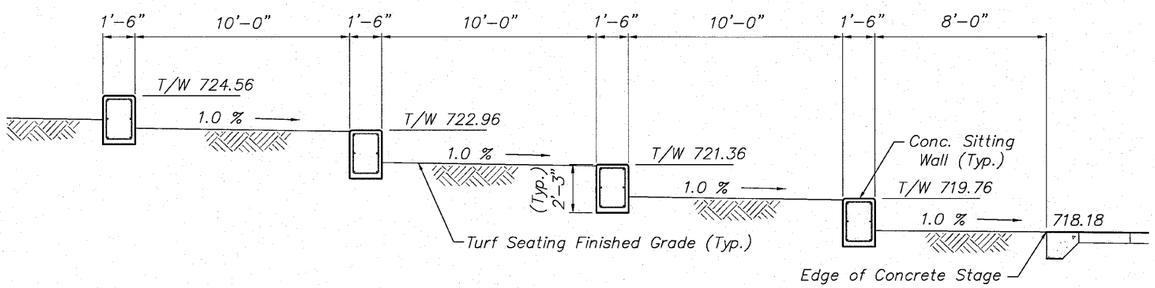

SECTION THRU AMPHITHEATER SEATING
(Typical)
no scale

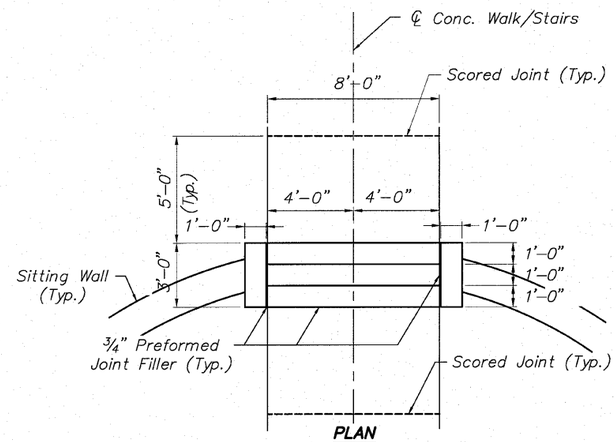

PLAN

NOTE:
Brush Finish on Exposed Surfaces

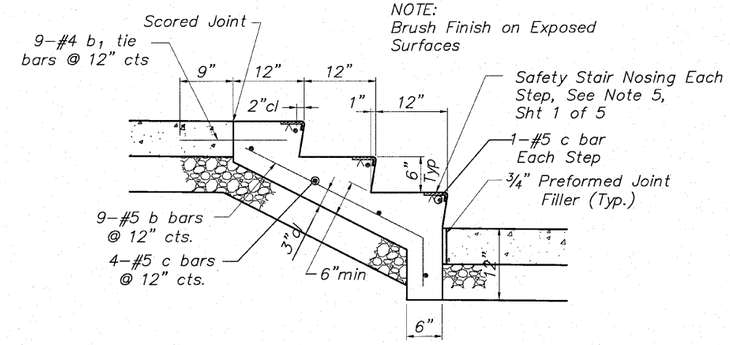

SECTION

STAIR DETAILS

BILL OF MATERIALS

For Sitting Walls, End Walls & Stairs

Bar	No.	Size	Length	Shape
b_1	27	#5	3'–5"	
b	27	#4	1'–6"	
c	21	#5	7'–8"	
h_{11}	6	#5	15'–10"	19'–8"R
h_{12}	6	#5	17'–3"	20'–10"R
h_{13}	6	#5	28'–11"	31'–2"R
h_{14}	6	#5	30'–3"	32'–4"R
h_{15}	12	#5	22'–1"	42'–8"R
h_{16}	12	#5	22'–11"	43'–10"R
h_{17}	12	#5	28'–7"	54'–2"R
h_{18}	12	#5	29'–3"	55'–4"R
h_{19}	48	#5	3'–8"	
h_{20}	48	#4	2'–8"	
v_{11}	48	#4	1'–10"	
s_1	300	#4	6'–9"	
Concrete Structures			Cu. Yd.	40.9
Reinforcement Bars			Pound	3836
Rubbed Finish			Sq. Ft.	1102.2

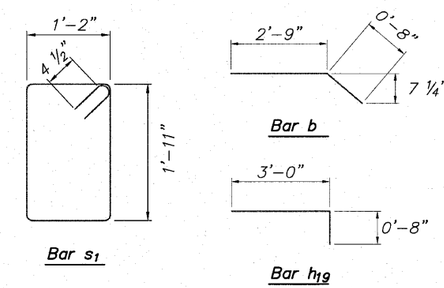

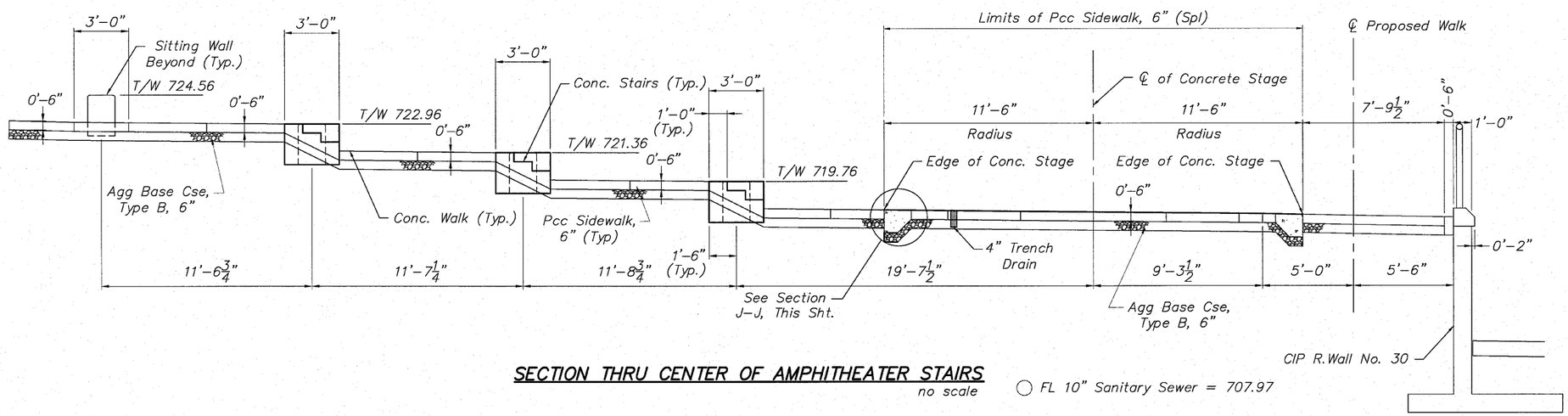

SECTION THRU CENTER OF AMPHITHEATER STAIRS
no scale

FL 10" Sanitary Sewer = 707.97

SITTING WALLS, STAIRS & SIDEWALK – DETAILS
RIVERWALK AMPHITHEATER
WINNEBAGO COUNTY
SECTION NO. 06–00543–00–BT
STATION 305+38.64

DESIGNED	CTB
CHECKED	AAG
DRAWN	JAW
CHECKED	JWH

McClure Engineering Associates, Inc.
7282 Argus Drive (815) 398–2332 Rockford, Illinois 61107–5837 Fax (815) 398–2496
Design Firm License: Illinois#184–000816

SHEET NO. 5
5 SHEETS

F.A. RTE.	SECTION	COUNTY	TOTAL SHEETS	SHEET NO.
	06-00543-00-BT	WINNEBAGO	148	55
		CONTRACT NO.		85521
FED. ROAD DIST. NO.	ILLINOIS	FED. AID PROJECT		

BENCH MARK: North Bonnet Bolt on Fire Hydrant South of Museum Entrance on the East side of N. Main Street Elev.=736.60

EXISTING STRUCTURE: None

STATE OF ILLINOIS

DEPARTMENT OF TRANSPORTATION

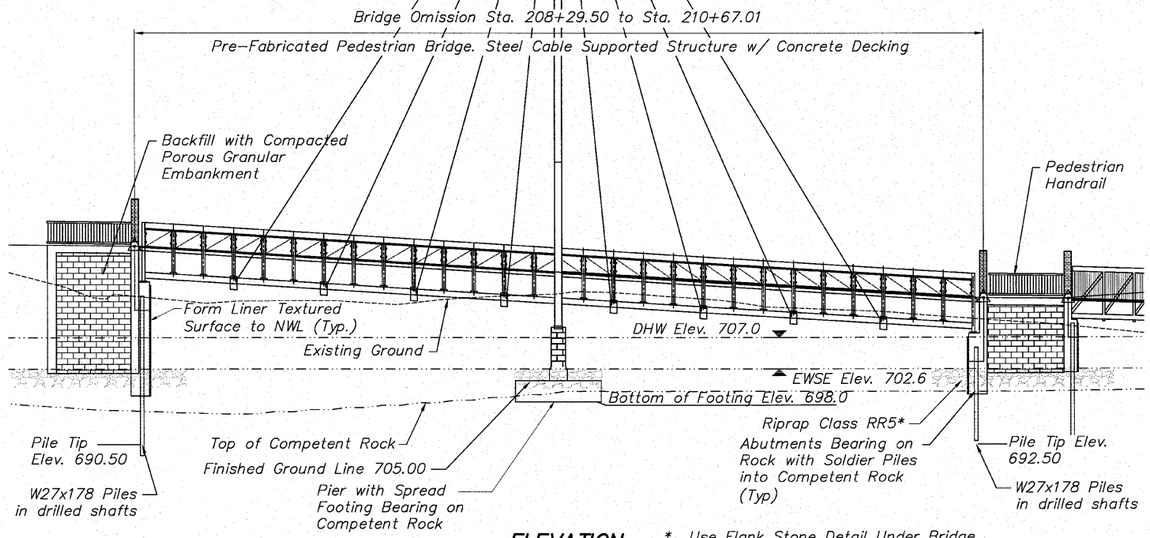

ELEVATION

* Use Flank Stone Detail Under Bridge in Front of Retaining Wall. Use Toe Stone Detail at Pier and Overlooks., See Details, Sht 2 of 11

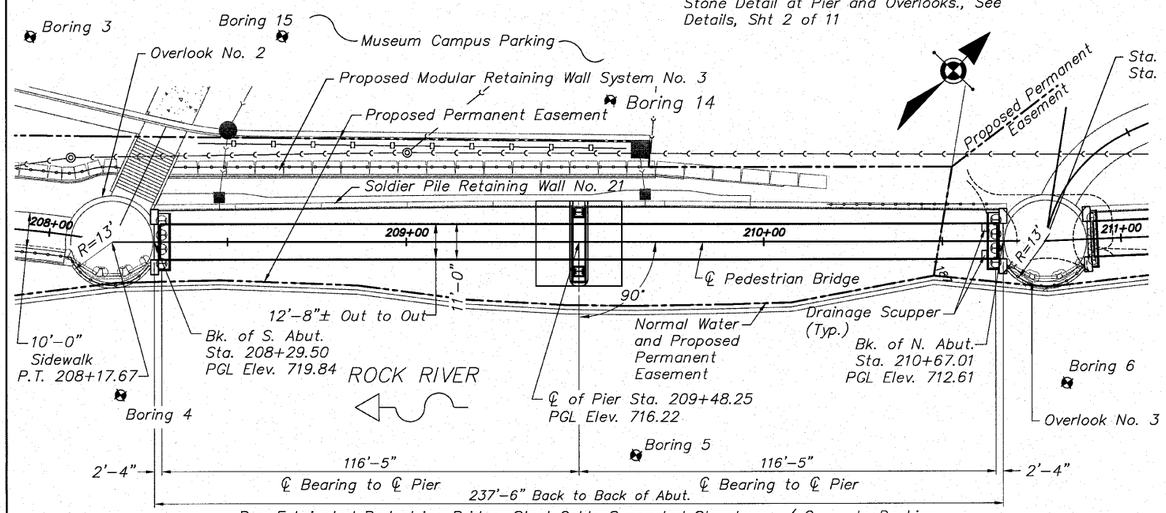

PLAN

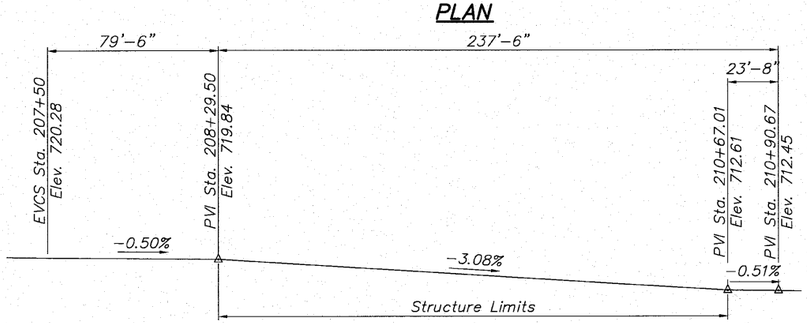

Profile Grade

(Along ℄ Walkway)

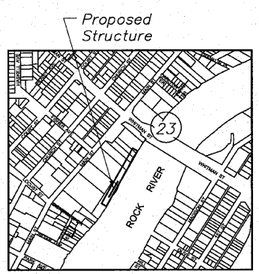

Section 23, Township 44 North, Range 1 East of the 3rd Principal Meridian

LOCATION SKETCH

HIGHWAY CLASSIFICATION

Rockford Pedestrian Riverwalk
Functional Class: Pedestrian

DESIGN STRESSES

FIELD UNITS

f'c = 3,500 psi
fy = 60,000 psi (Reinforcement)
fy = 50,000 psi (M270 Grade 50) – Soldier Pile

PREFABRICATED BRIDGE UNITS

fy = 50,000 psi (M270 Grade 50)
See Special Provisions for "Pedestrian Truss Superstructure"

LOADING

Pedestrian/Bicycle Design Loading: 85 psf
Vehicular: H-10

DESIGN SPECIFICATIONS

Americans with Disabilities Act (ADA)
2002 AASHTO "Standard Specifications for Highway Bridges"
17th Edition, AASHTO "Guide Specifications for Design of Pedestrian Bridges"

SEISMIC DATA

Seismic Performance Category (SPC) = A
Horizontal Bedrock Acceleration Coefficient (A) = 0.0325g
Site Coefficient (S) = 1.0

INDEX OF BRIDGE SHEETS

TOTAL BILL OF MATERIALS

ITEM	UNIT	SUPER	SUB	TOTAL
Prefabricated Cable-Stayed Pedestrian Bridge	Sq. Ft.	2,740		2,740
Structure Excavation	Cu. Yd.			
Rock Excavation for Structures	Cu. Yd.		101	101
Concrete Structures	Cu. Yd.		179.9	179.9
Reinforcement Bars (Epoxy Coated)	Pound		19,636	19,636
Furnishing Soldier Pile W Section W27x178	Foot		156	156
Setting Piles in Rock	Each		8	8
PCC Pavement, 7 ½"	Sq. Yd.	304.4		304.4
Geocomposite Wall Drain	Sq. Yd.		68.0	68.0
Form Liner Textured Surface	Sq. Ft.		71.5	71.5

REFER TO SHEET 11 FOR GENERAL NOTES

WATERWAY INFORMATION

Drainage Area = 6400 Sq.Mi. Low Grade Elev. 712.57 @ Sta 210+67.0

Flood	Freq. Yr.	Q C.F.S.	Opening Sq.Ft.		Nat H.W.E.	Head – Ft.		Headwater El.	
			Exist.	Prop.		Exist.	Prop.	Exist.	Prop.
Design	100	41,500	N/A	905	707.0	N/A	N/A	N/A	N/A
Base	100	41,500	N/A	905	707.0	N/A	N/A	N/A	N/A
Max. Calc.	500		N/A	1,493	709.6	N/A	N/A	N/A	N/A

DESIGN SCOUR ELEVATIONS		
South Abutment	Pier	North Abutment
700.0	700.0	700.0

STATION 209+48.25
BUILT 2011 BY
CITY OF ROCKFORD
SECTION No. 06-00543-00-BT
LOADING H-10
STR No. 101-6350

NAME PLATE

LICENSED STRUCTURAL ENGINEER TODD C. UDE 081-005764 Exp. 11/30/2010 STATE OF ILLINOIS

REVIEWED AND APPROVED
FOR STRUCTURAL ADEQUACY ONLY
EXCLUDING PRE-FABRICATED SUPERSTRUCTURE

Todd C. Ude 9/9/10
Todd C. Ude

ALI A. GHARAMITI 081-005060 LICENSED STRUCTURAL ENGINEER OF MOLINE STATE OF ILLINOIS

Signature
9/8/10
Date

GENERAL PLAN & ELEVATION
CABLE-STAYED PEDESTRIAN BRIDGE
PEDESTRIAN RIVERWALK
ALONG THE ROCK RIVER
WINNEBAGO COUNTY
SECTION NO. 06-00543-00-BT
STATION 209+48.25
STRUCTURE NO. 101-6350

DESIGNED	CTB
CHECKED	AAG
DRAWN	JAW
PEER REVIEWED	

EXAMINED — 2010
ENGINEER OF BRIDGE DESIGN
PASSED
ENGINEER OF BRIDGES AND STRUCTURES

McClure Engineering Associates, Inc.
7282 Argus Drive Rockford, Illinois 61107-5837
(815) 398-2332 Fax (815) 398-2496
Design Firm License: Illinois #184-000816

SHEET NO. 1
11 SHEETS

F.A. RTE.	SECTION	COUNTY	TOTAL SHEETS	SHEET NO.
	06-00543-00-BT	WINNEBAGO	148	56
		CONTRACT NO.		85521
FED. ROAD DIST. NO.	ILLINOIS	FED. AID PROJECT		

STATE OF ILLINOIS

DEPARTMENT OF TRANSPORTATION

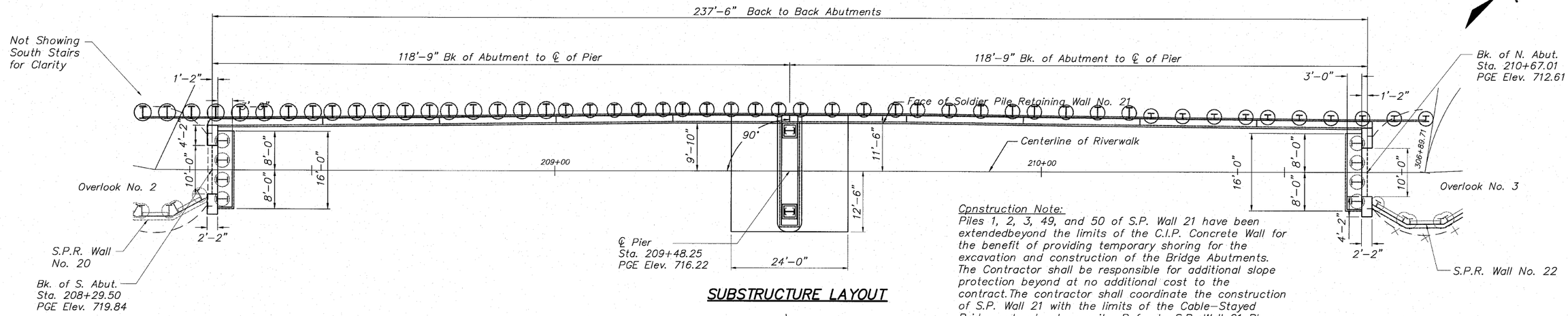

Construction Note:
Piles 1, 2, 3, 49, and 50 of S.P. Wall 21 have been extendedbeyond the limits of the C.I.P. Concrete Wall for the benefit of providing temporary shoring for the excavation and construction of the Bridge Abutments. The Contractor shall be responsible for additional slope protection beyond at no additional cost to the contract. The contractor shall coordinate the construction of S.P. Wall 21 with the limits of the Cable-Stayed Bridge sub-structure units. Refer to S.P. Wall 21 Plans.

SUBSTRUCTURE LAYOUT

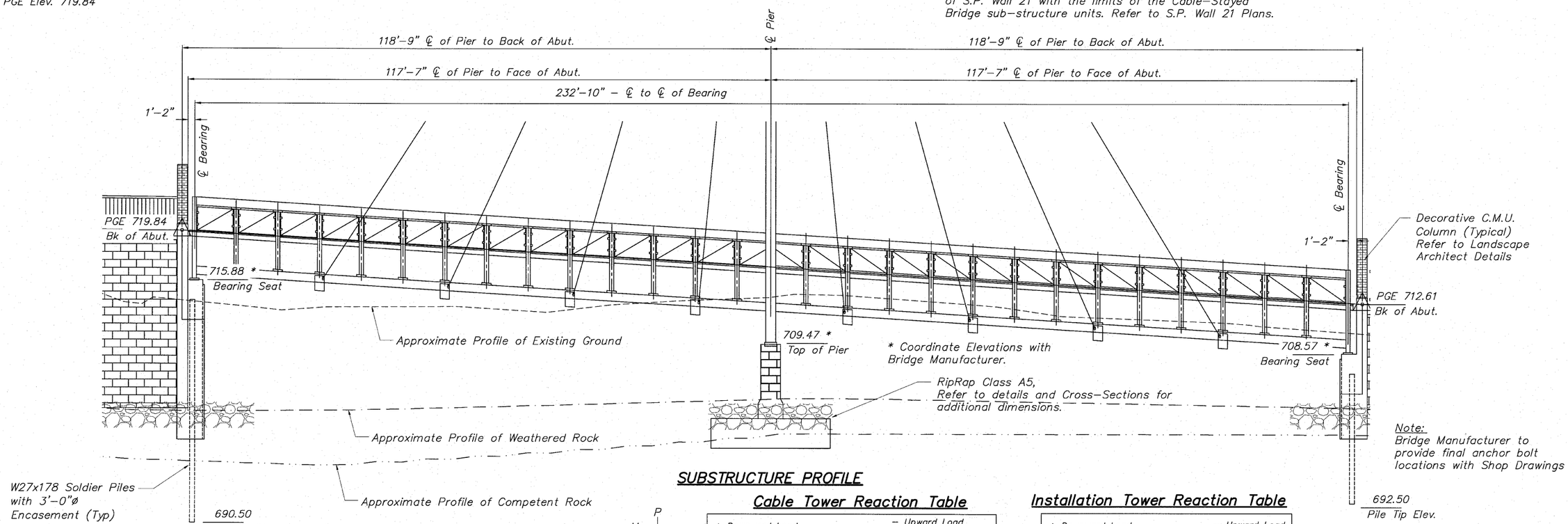

Note:
Bridge Manufacturer to provide final anchor bolt locations with Shop Drawings

SUBSTRUCTURE PROFILE

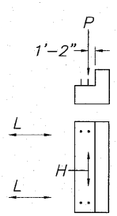

Abut.

Abutment Reaction Table

+ Downward Load		– Upward Load	
	P (Kips)	H (Kips)	L (Kips)
Dead Load	30.9		
Uniform Live Load	23.7 / –8.1		
Vehicle Load	10.0		
Wind Uplift (20 psf)	24.2 / –8.1		
Wind	±7.3	10.1	
Wind at 45°	±6.7	5.3	9.7
Thermal			3.5

P – Vertical Load Each Base Plate (4 per Bridge)
H – Horizontal Load Per Abutment (2 per Bridge)
L – Longitudinal Load Each Base Plate (4 per Bridge)

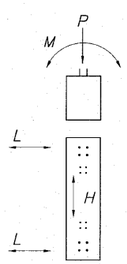

Pier

Cable Tower Reaction Table

+ Downward Load		– Upward Load	
	P (Kips)	M (K–Ft.)	L (Kips)
Dead Load	177.0		
Uniform Live Load	91.2	52.8	
Wind Uplift (20 psf)	14.9 / –7.6		
Wind	14.9 / –7.6	182.6	
Wind at 45°	±8.4	149	7.9

P – Vertical Load Each Base Plate (2 per Pier)
M – Moment Load Per Pier (1 per Pier)
L – Longitudinal Load Each Base Plate (2 per Pier)

Installation Tower Reaction Table

+ Downward Load		– Upward Load
	P (Kips)	H (Kips)
Dead Load	44.6	
Construction LL (20 psf)	17.9	
Wind	±8.8	34.6
Wind at 45°		19.1

P – Vertical Load Each Base Plate (2 per Pier)
H – Horizontal Load Per Pier (1 per Pier)

SUBSTRUCTURE LAYOUT
CABLE-STAYED PEDESTRIAN BRIDGE
PEDESTRIAN RIVERWALK
ALONG THE ROCK RIVER
WINNEBAGO COUNTY
SECTION NO. 06-00543-00-BT
STATION 209+48.25
STRUCTURE NO. 101-6350

DESIGNED	CTB
CHECKED	AAG
DRAWN	JAW
PEER REVIEWED	

McClure Engineering Associates, Inc.
7282 Argus Drive Rockford, Illinois 61107-5837
(815) 398-2332 Fax (815) 398-2496
Design Firm License: Illinois#184-000816

SHEET NO. 2
11 SHEETS

F.A. RTE.	SECTION	COUNTY	TOTAL SHEETS	SHEET NO.
	06-00543-00-BT	WINNEBAGO	148	57
		CONTRACT NO.		85521
FED. ROAD DIST. NO.	ILLINOIS	FED. AID PROJECT		

DEPARTMENT OF TRANSPORTATION

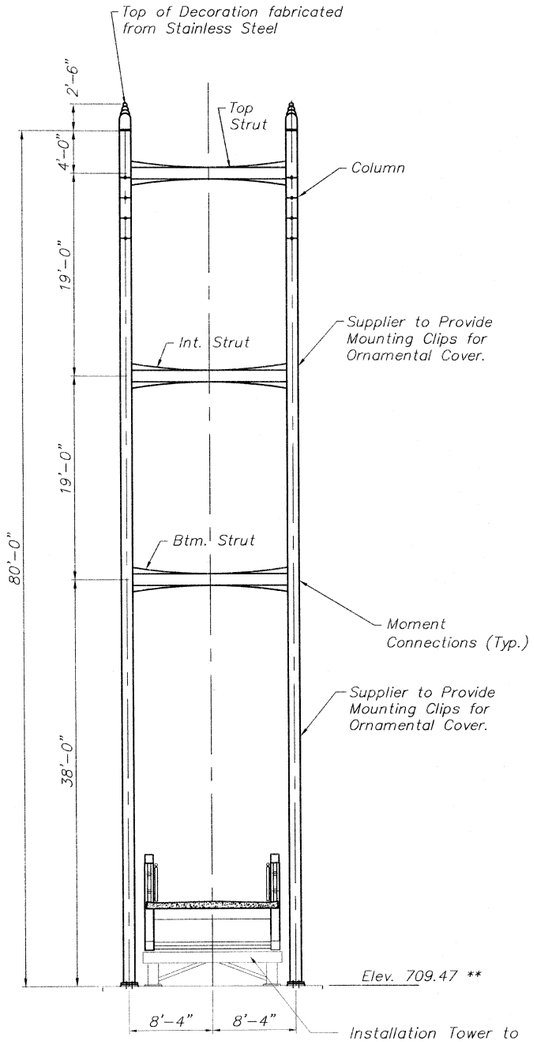

TOWER ELEVATION

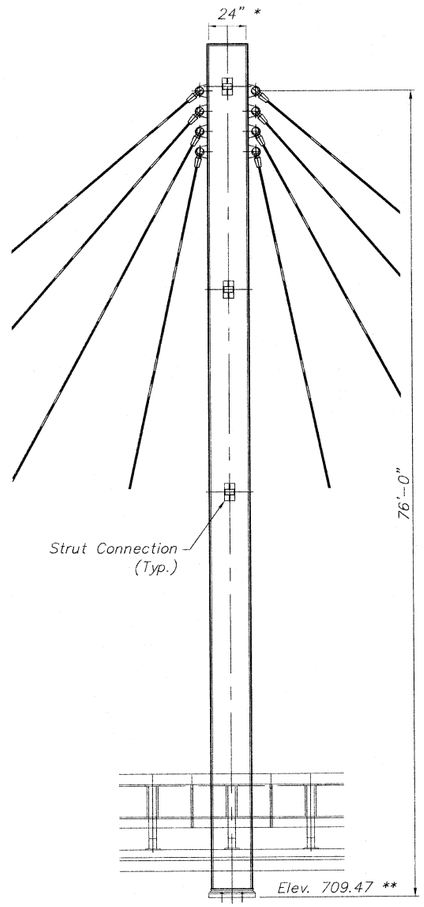

TOWER ELEVATION–SIDE VIEW

* Subject to Refinement in Manufacturer's Final Detailing

** Coordinate Elevations with Bridge Manufacturer

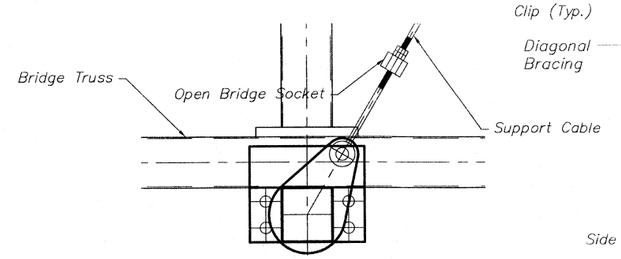

BRIDGE TRUSS CABLE ATTACHMENT DETAIL

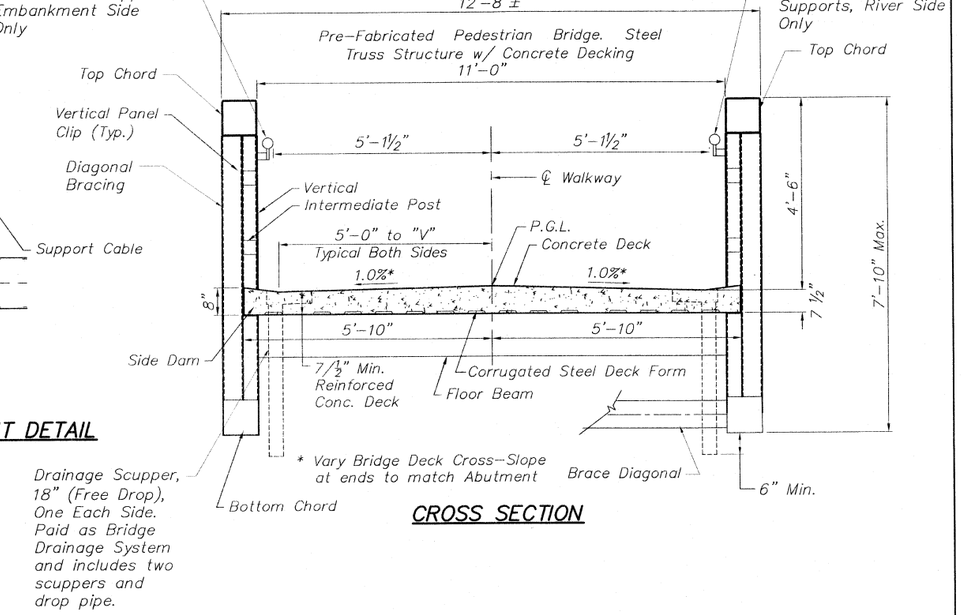

CROSS SECTION

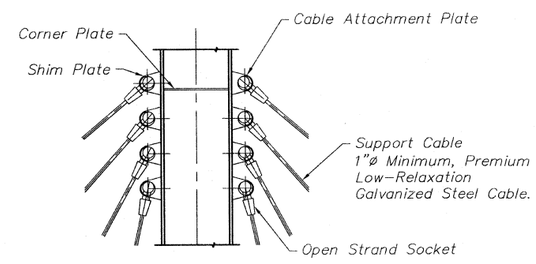

TOWER CABLE ATTACHMENT DETAIL

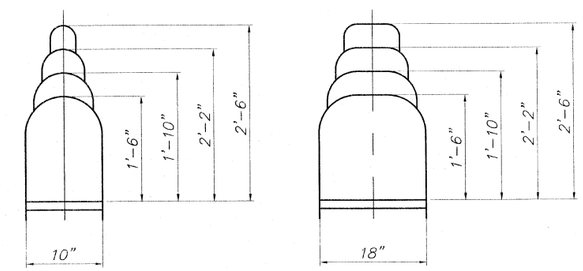

TOP ORNAMENT DETAILS

NOTE:

Contractor shall refer to the Special Provisions for design requirements, loading and stresses.

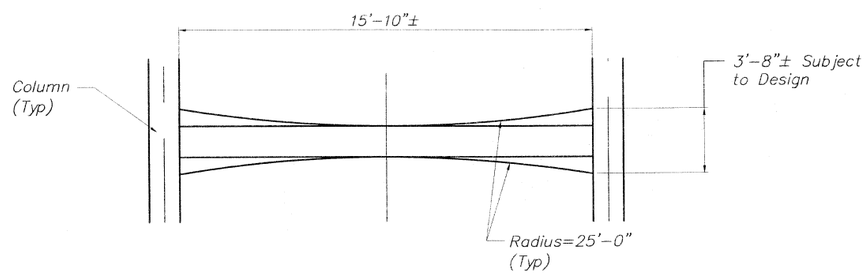

TOWER STRUT DETAIL

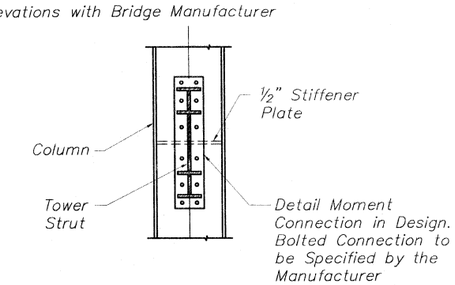

TOWER STRUT CONNECTION

SUPERSTRUCTURE DETAILS
CABLE-STAYED PEDESTRIAN BRIDGE
PEDESTRIAN RIVERWALK
ALONG THE ROCK RIVER
WINNEBAGO COUNTY
SECTION NO. 06-00543-00-BT
STATION 209+48.25
STRUCTURE NO. 101-6350

DESIGNED	CTB
CHECKED	AAG
DRAWN	JAW
CHECKED	JWH

McClure Engineering Associates, Inc.
7282 Argus Drive (815) 398-2332 Rockford, Illinois 61107-5837 Fax (815) 398-2496
Design Firm License: Illinois#184-000816

SHEET NO. 3

11 SHEETS

F.A. RTE.	SECTION	COUNTY	TOTAL SHEETS	SHEET NO.
	06-00543-00-BT	WINNEBAGO	148	58
		CONTRACT NO.		85521
FED. ROAD DIST. NO.	ILLINOIS	FED. AID PROJECT		

STATE OF ILLINOIS

DEPARTMENT OF TRANSPORTATION

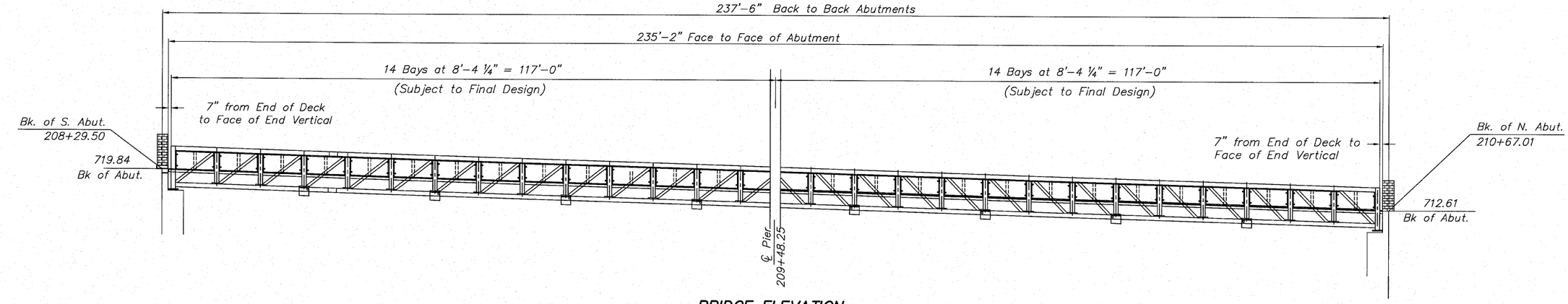

BRIDGE ELEVATION

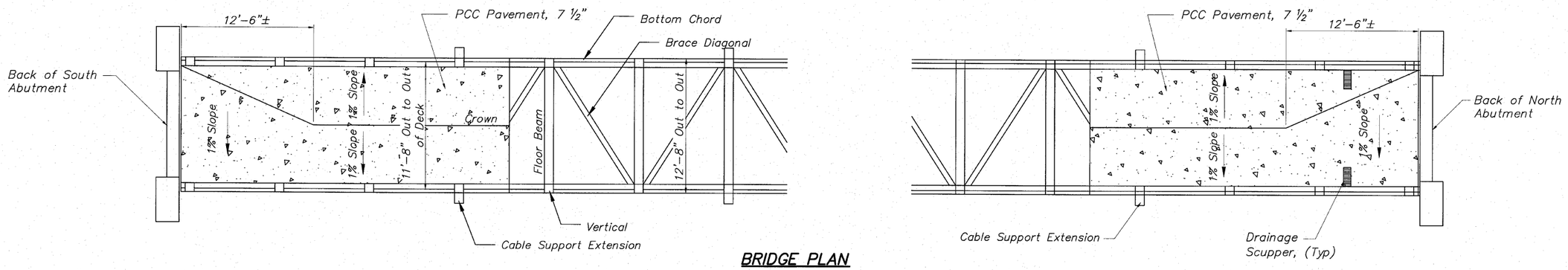

BRIDGE PLAN

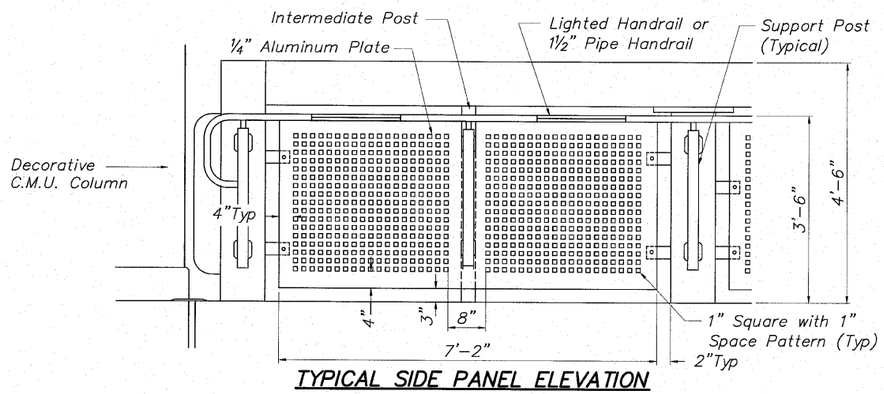

TYPICAL SIDE PANEL ELEVATION

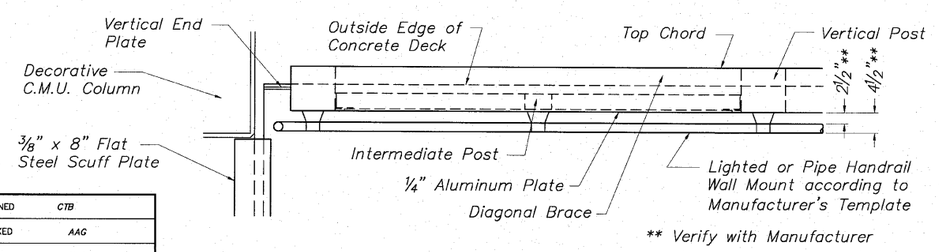

TYPICAL SIDE PANEL PLAN

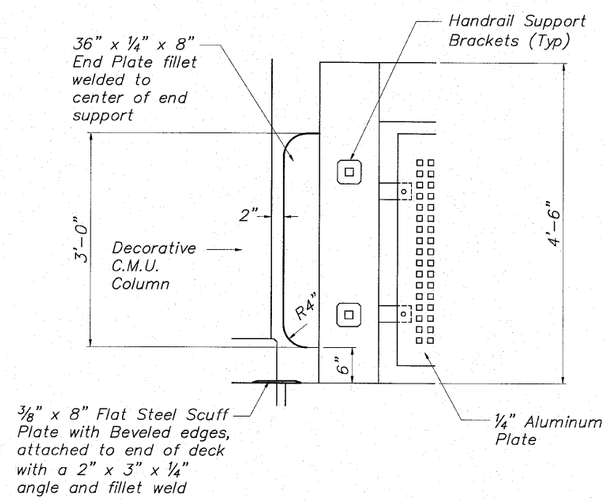

DETAIL OF SCUFF PLATE & END VERTICAL PLATE

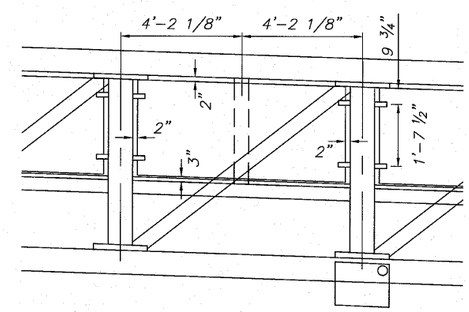

TYPICAL PANEL MOUNTING DETAIL

SUPERSTRUCTURE DETAILS
CABLE-STAYED PEDESTRIAN BRIDGE
PEDESTRIAN RIVERWALK
ALONG THE ROCK RIVER
WINNEBAGO COUNTY
SECTION NO. 06-00543-00-BT
STATION 209+48.25
STRUCTURE NO. 101-6350

DESIGNED	CTB
CHECKED	AAG
DRAWN	JAW
PEER REVIEWED	

McClure Engineering Associates, Inc.
7282 Argus Drive
(815) 398-2332
Rockford, Illinois 61107-5837
Fax (815) 398-2496
Design Firm License: Illinois#184-000816

SHEET NO. 4

11 SHEETS

F.A. RTE.	SECTION	COUNTY	TOTAL SHEETS	SHEET NO.
	06-00543-00-BT	WINNEBAGO	148	59
		CONTRACT NO.		85521
FED. ROAD DIST. NO.	ILLINOIS	FED. AID PROJECT		

STATE OF ILLINOIS
DEPARTMENT OF TRANSPORTATION

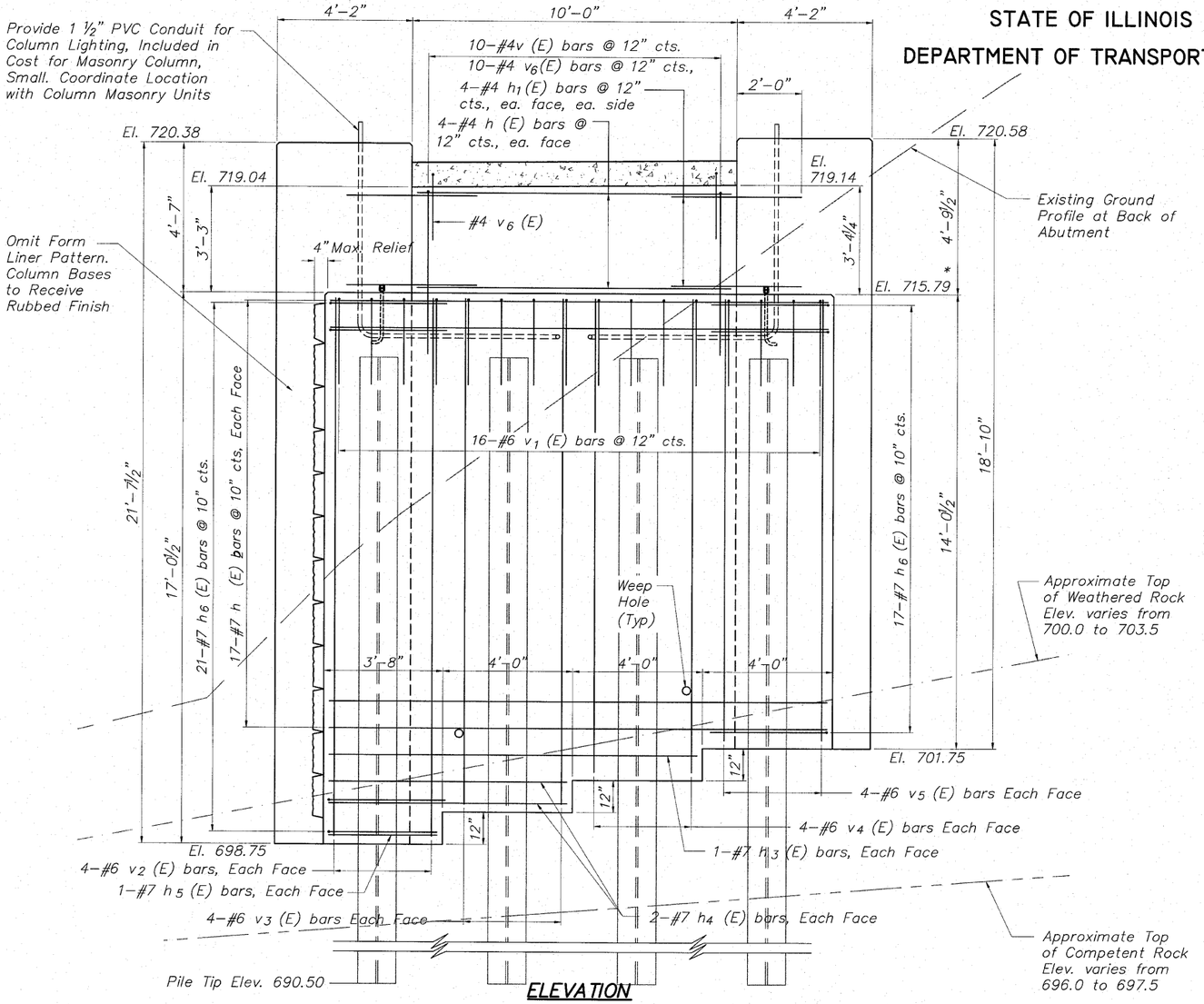

ELEVATION
Looking South

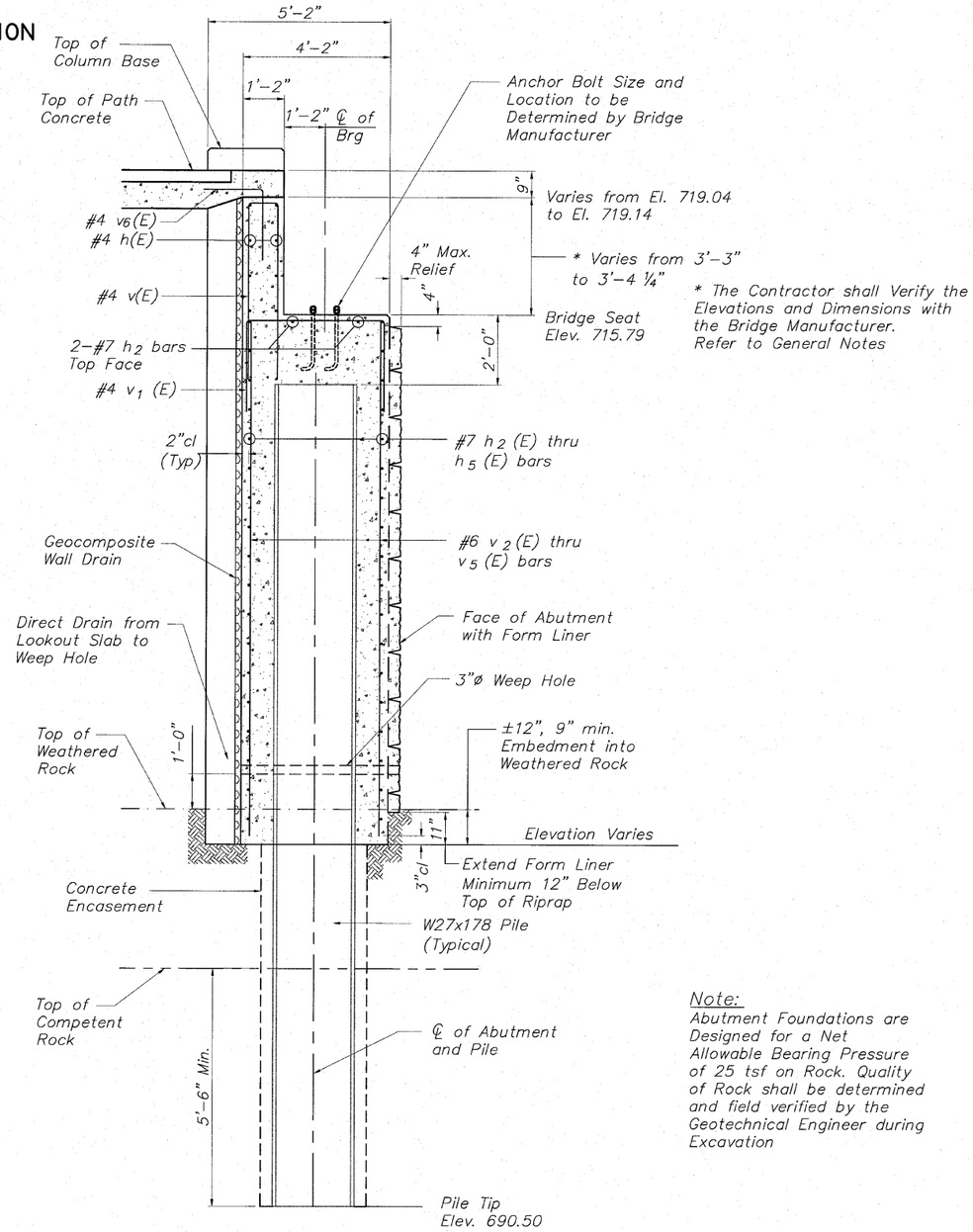

SEC THRU SOUTH ABUT

Note:
Abutment Foundations are Designed for a Net Allowable Bearing Pressure of 25 tsf on Rock. Quality of Rock shall be determined and field verified by the Geotechnical Engineer during Excavation

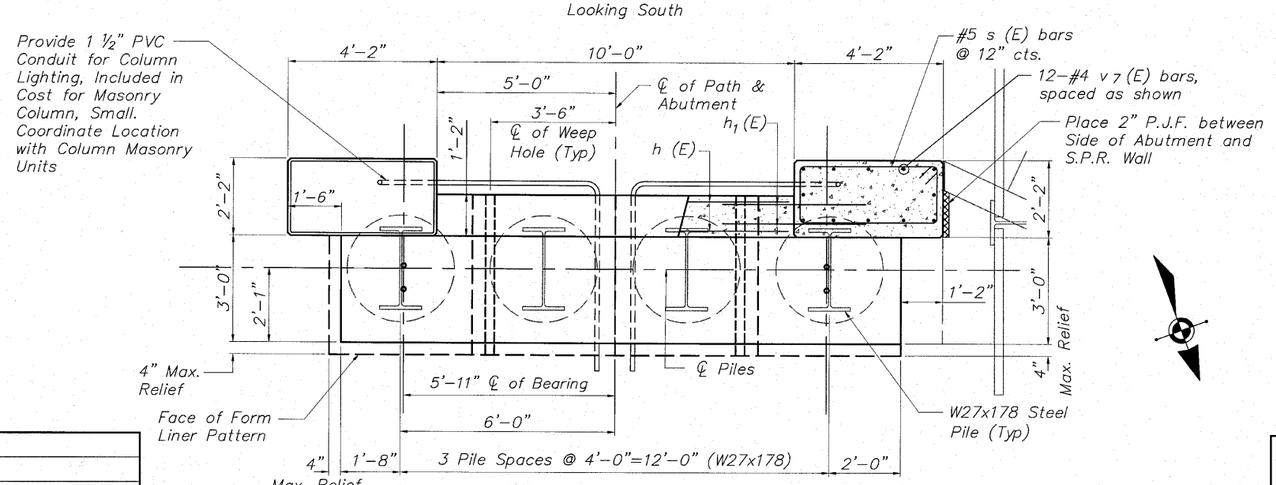

PLAN

SOUTH ABUTMENT DETAILS
CABLE-STAYED PEDESTRIAN BRIDGE
PEDESTRIAN RIVERWALK
ALONG THE ROCK RIVER
WINNEBAGO COUNTY
SECTION NO. 06-00543-00-BT
STATION 209+48.25
STRUCTURE NO. 101-6350

DESIGNED	
CHECKED	
DRAWN	
PEER REVIEWED	

McClure Engineering Associates, Inc.
7282 Argus Drive (815) 398-2332
Rockford, Illinois 61107-5837 Fax (815) 398-2496
Design Firm License: Illinois#184-000816

SHEET NO. 5
11 SHEETS

F.A. RTE.	SECTION	COUNTY	TOTAL SHEETS	SHEET NO.
	06-00543-00-BT	WINNEBAGO	148	60
		CONTRACT NO.		85521
FED. ROAD DIST. NO.	ILLINOIS	FED. AID PROJECT		

STATE OF ILLINOIS
DEPARTMENT OF TRANSPORTATION

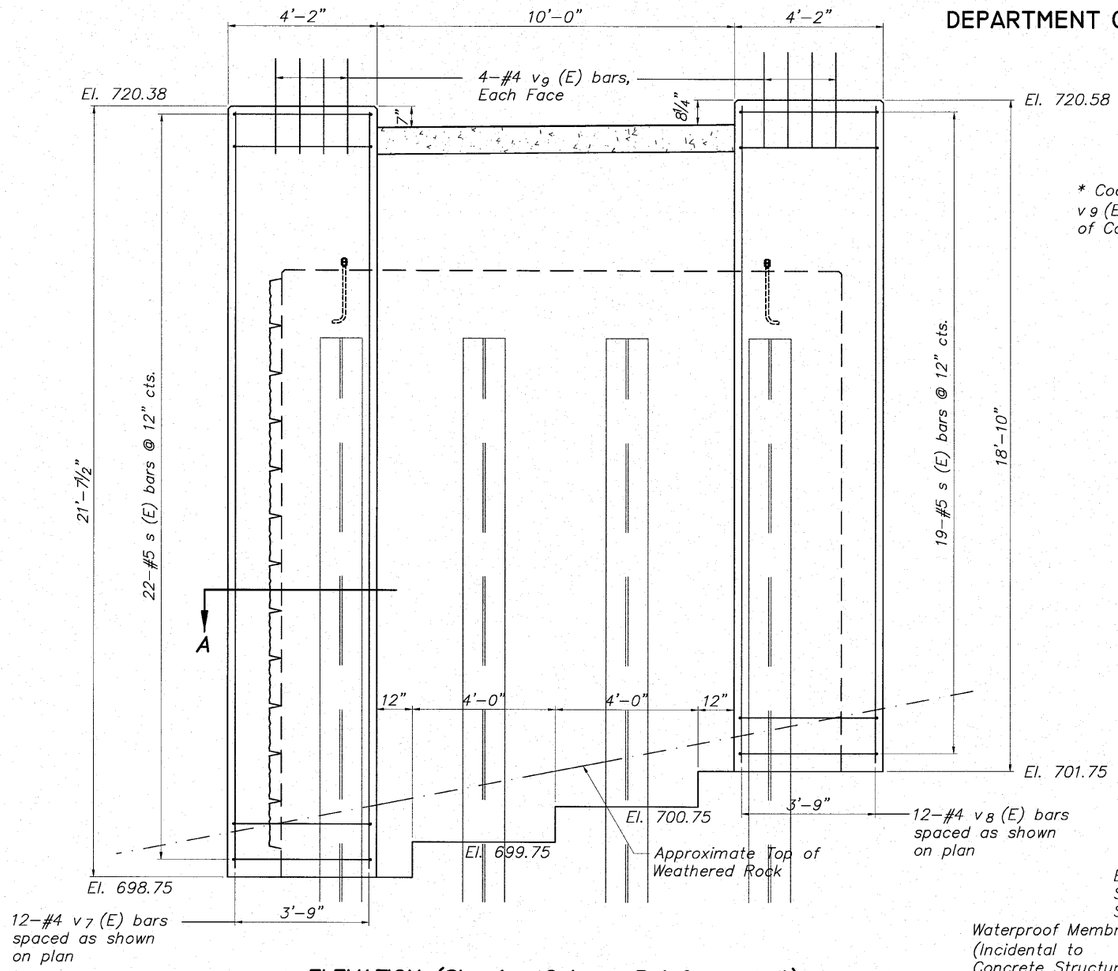

ELEVATION (Showing Column Reinforcement)

Looking South

* Coordinate location of vg (E) bars with cores of Column Masonry Units

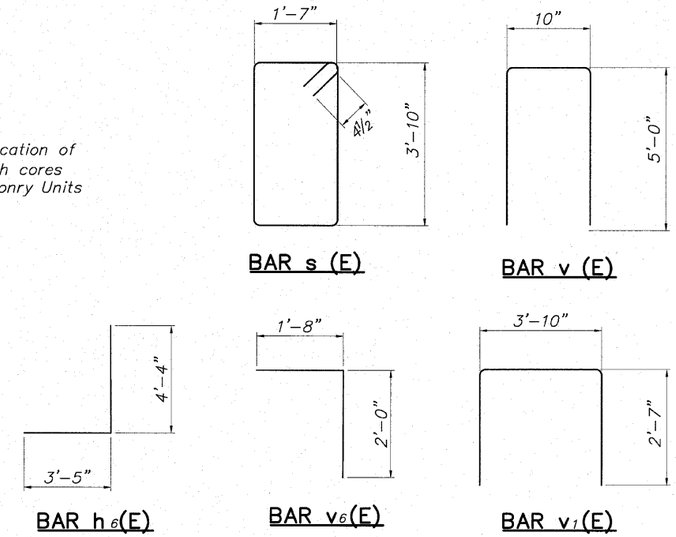

MINIMUM BAR LAP

No. 4 bars	1'-8"
No. 5 bars	2'-2"
No. 6 bars	2'-7"
No. 7 bars	3'-5"

BILL OF MATERIAL

South Abutment For Struct. No. 101-6350

Bar	No.	Size	Length	Shape
h (E)	8	#4	9'-8"	
h1 (E)	16	#4	4'-0"	
h2 (E)	36	#7	15'-4"	
h3 (E)	2	#7	11'-4"	
h4 (E)	4	#7	7'-4"	
h5 (E)	2	#7	3'-4"	
h6 (E)	38	#7	7'-9"	
s (E)	41	#5	11'-7"	
v (E)	10	#4	10'-10"	
v1 (E)	16	#6	9'-0"	
v2 (E)	11	#6	16'-7"	
v3 (E)	8	#6	15'-7"	
v4 (E)	8	#6	14'-7"	
v5 (E)	11	#6	13'-7"	
v6 (E)	10	#4	3'-8"	
v7 (E)	12	#4	21'-2"	
v8 (E)	12	#4	18'-5"	
v9 (E)	16	#4	2'-8"	
Concrete Structures			Cu. Yd.	51.8
Reinforcement Bars (Epoxy Coated)			Pound	3,490
Furnishing Steel Piles W Section W27x178			Foot	96
Setting Piles in Rock			Each	4
Geocomposite Wall Drain			Sq. Yd.	42.5
Form Liner Textured Surface			Sq. Ft.	276
Rock Excavation for Structures			Cu. Yd.	8.0

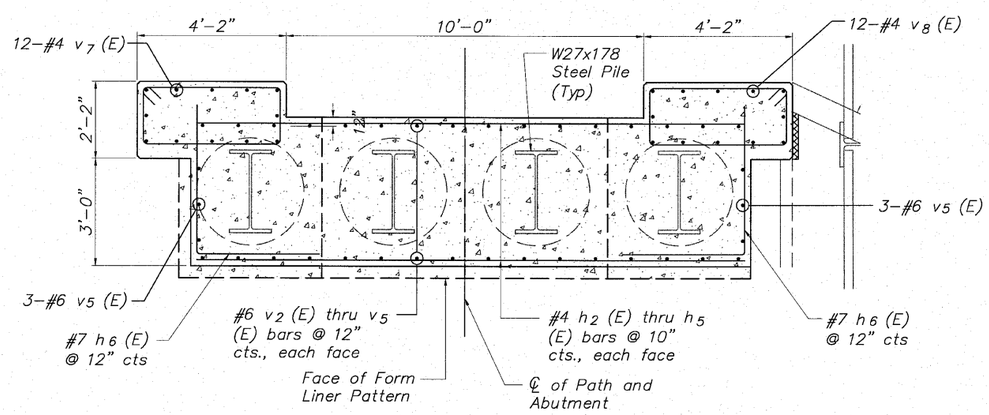

SECTION A-A

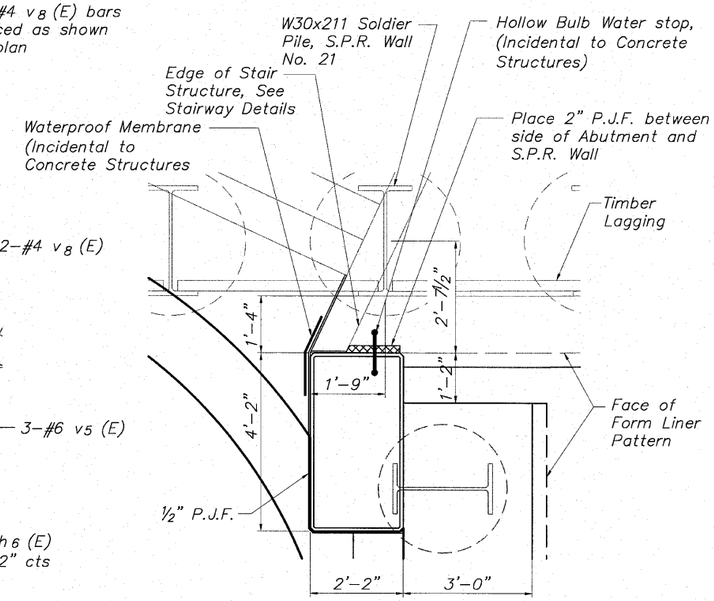

WEST SIDE SOUTH ABUTMENT PLAN

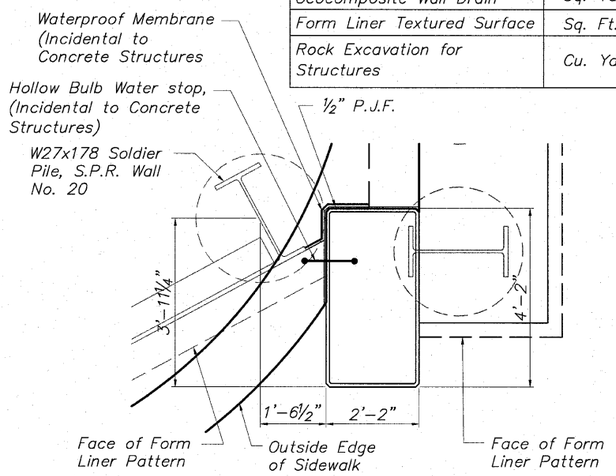

EAST SIDE SOUTH ABUTMENT PLAN

SOUTH ABUTMENT DETAILS
CABLE-STAYED PEDESTRIAN BRIDGE
PEDESTRIAN RIVERWALK
ALONG THE ROCK RIVER
WINNEBAGO COUNTY
SECTION NO. 06-00543-00-BT
STATION 209+48.25
STRUCTURE NO. 101-6350

DESIGNED	CTB
CHECKED	AAG
DRAWN	JAW
PEER REVIEWED	

McClure Engineering Associates, Inc.
7282 Argus Drive (815) 398-2332
Rockford, Illinois 61107-5837 Fax (815) 398-2496
Design Firm License: Illinois#184-000816

SHEET NO. 6
II SHEETS

F.A. RTE.	SECTION	COUNTY	TOTAL SHEETS	SHEET NO.
	06-00543-00-BT	WINNEBAGO	148	61
		CONTRACT NO.		85521
FED. ROAD DIST. NO.	ILLINOIS	FED. AID PROJECT		

STATE OF ILLINOIS
DEPARTMENT OF TRANSPORTATION

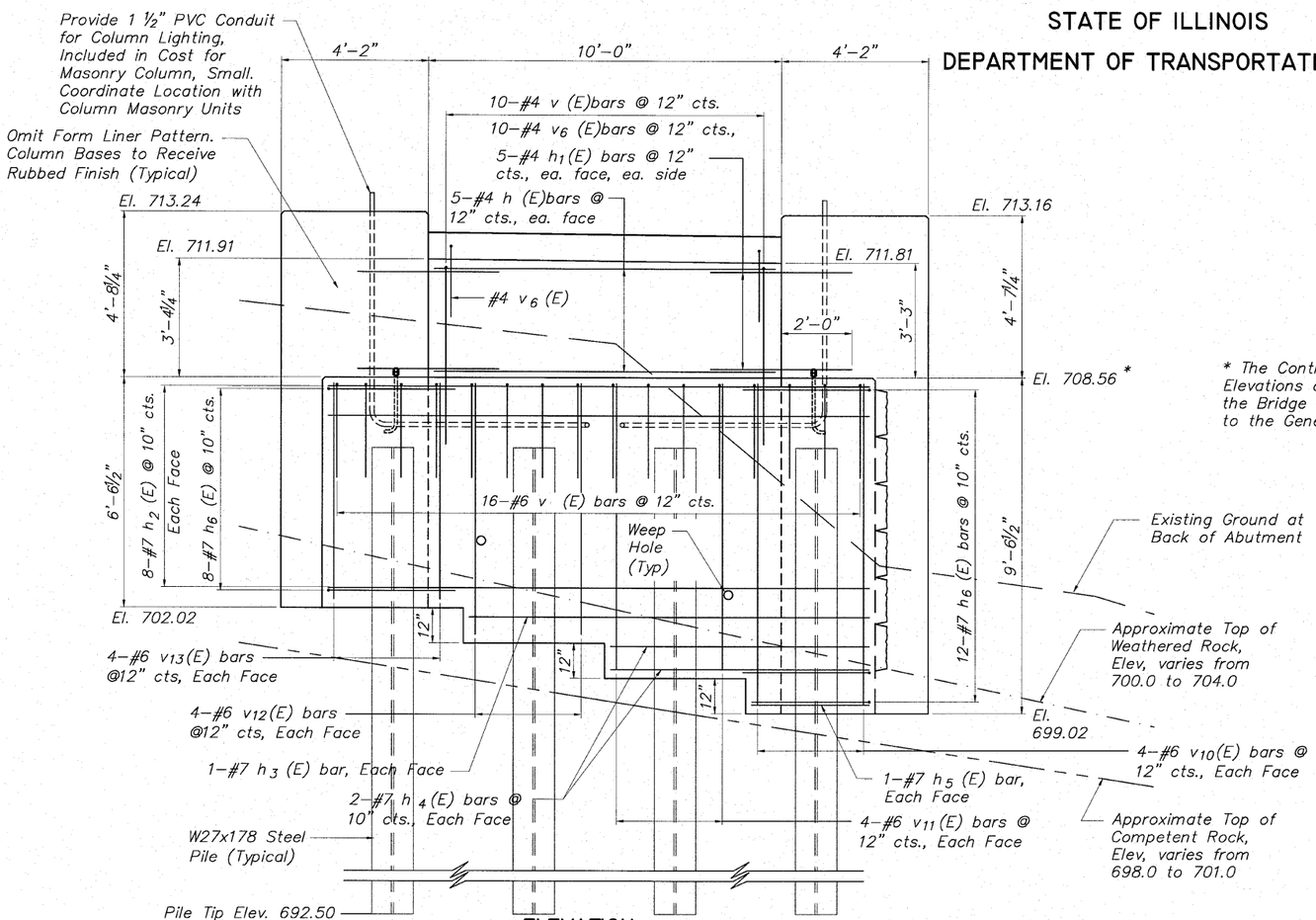

ELEVATION
Looking North

* The Contractor shall Verify Elevations and Dimensions with the Bridge Manufacturer. Refer to the General Notes.

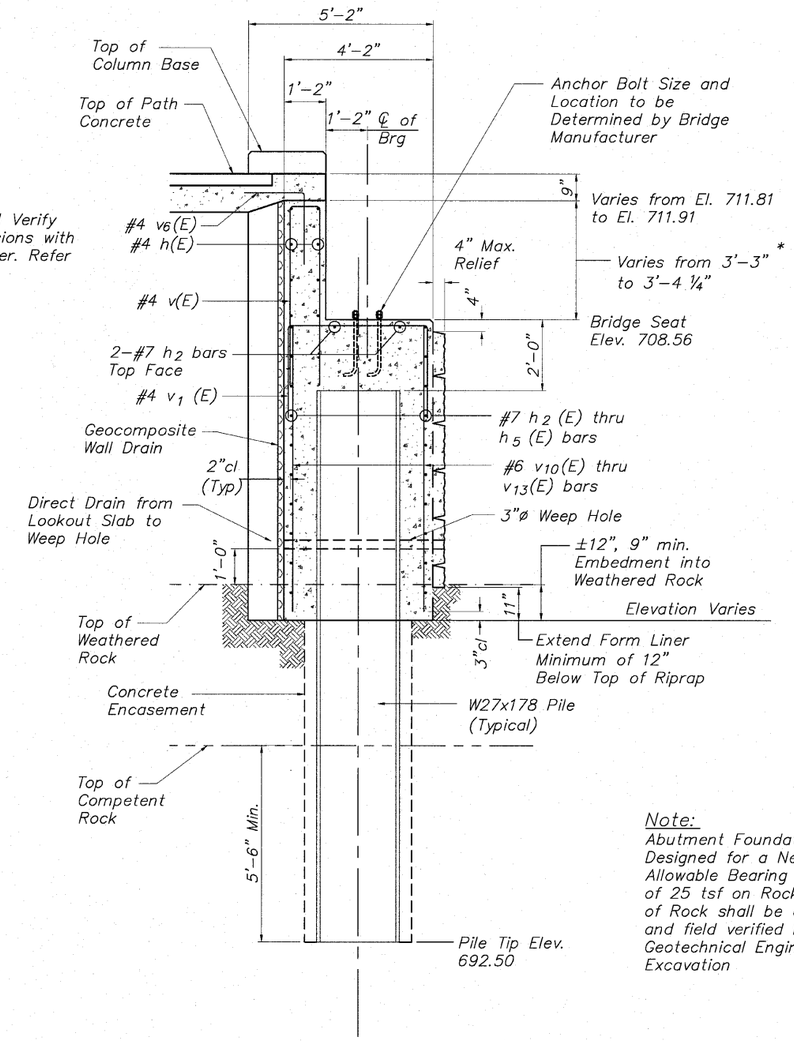

Note:
Abutment Foundations are Designed for a Net Allowable Bearing Pressure of 25 tsf on Rock. Quality of Rock shall be determined and field verified by the Geotechnical Engineer during Excavation

SEC THRU NORTH ABUT

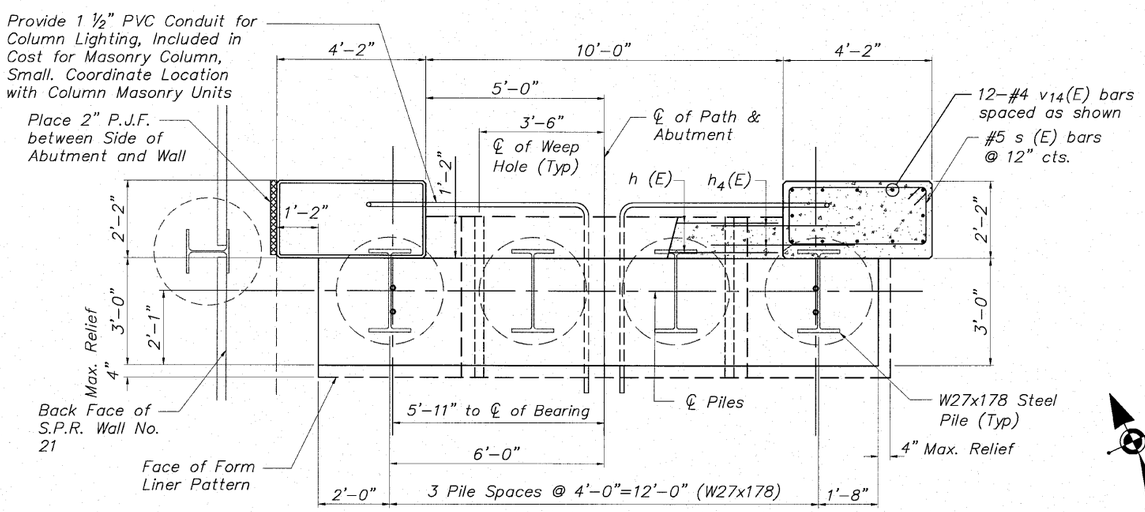

PLAN

NORTH ABUTMENT DETAILS
CABLE-STAYED PEDESTRIAN BRIDGE
PEDESTRIAN RIVERWALK
ALONG THE ROCK RIVER
WINNEBAGO COUNTY
SECTION NO. 06-00543-00-BT
STATION 209+48.25
STRUCTURE NO. 101-6350

DESIGNED	CTB
CHECKED	AAG
DRAWN	JAW
PEER REVIEWED	

McClure Engineering Associates, Inc.
7282 Argus Drive (815) 398-2332
Rockford, Illinois 61107-5837 Fax (815) 398-2496
Design Firm License: Illinois#184-000816

SHEET NO. 7
II SHEETS

F.A. RTE.	SECTION	COUNTY	TOTAL SHEETS	SHEET NO.
	06-00543-00-BT	WINNEBAGO	148	62
		CONTRACT NO.		85521
FED. ROAD DIST. NO.	ILLINOIS	FED. AID PROJECT		

STATE OF ILLINOIS

DEPARTMENT OF TRANSPORTATION

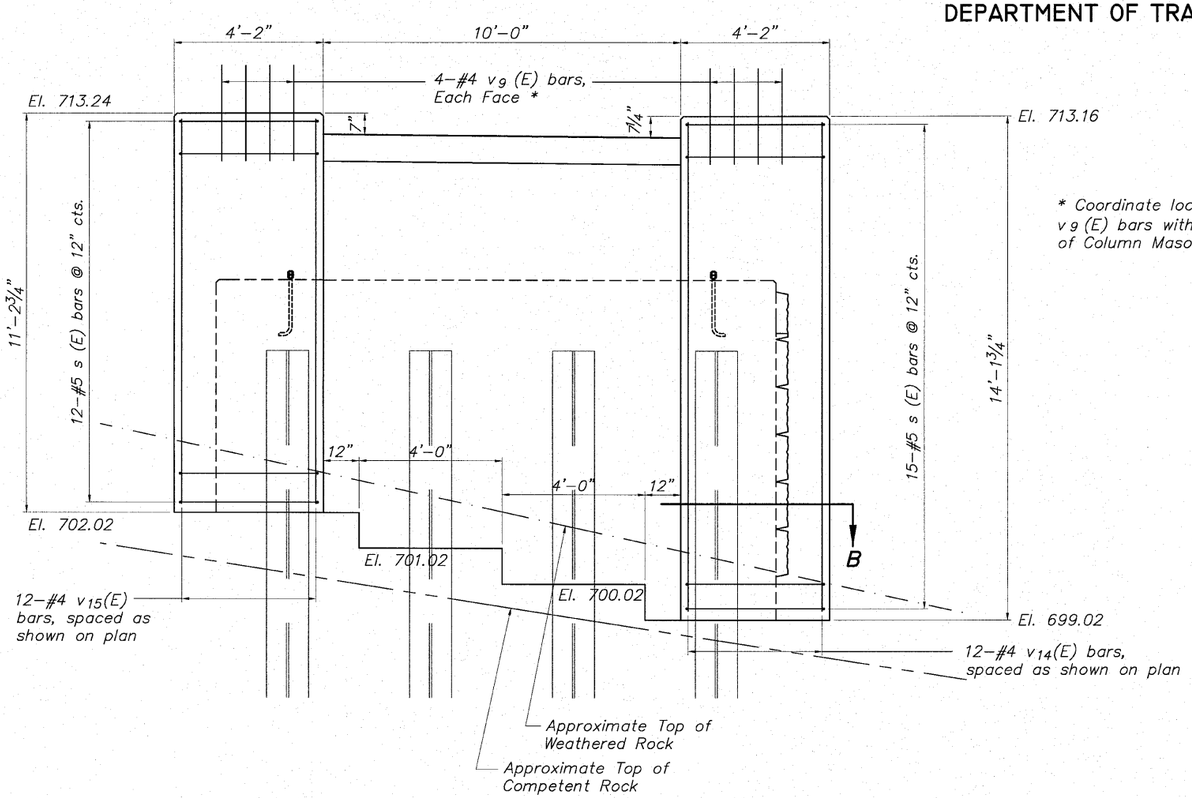

* Coordinate location of v9 (E) bars with cores of Column Masonry Units

ELEVATION (Showing Column Reinforcement)

Looking North

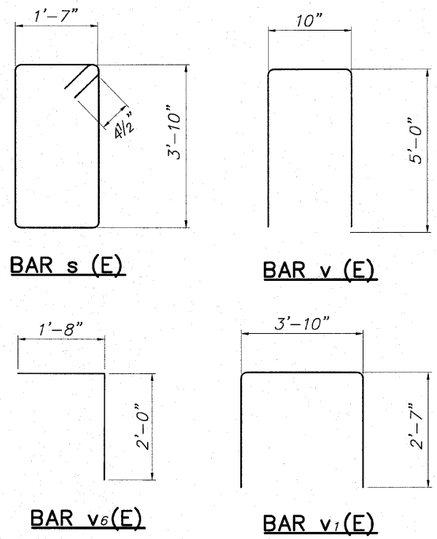

MINIMUM BAR LAP

No. 4 bars	1'-8"
No. 5 bars	2'-2"
No. 6 bars	2'-7"
No. 7 bars	3'-5"

BILL OF MATERIAL

North Abutment For Struct. No. 101-6350

Bar	No.	Size	Length	Shape
h (E)	8	#4	9'-8"	
h1 (E)	16	#4	4'-0"	
h2 (E)	18	#7	15'-4"	
h3 (E)	2	#7	11'-4"	
h4 (E)	4	#7	7'-4"	
h5 (E)	2	#7	3'-4"	
h6 (E)	20	#7	4'-4"	
s (E)	27	#5	11'-7"	
v (E)	10	#4	10'-10"	
v1 (E)	16	#6	9'-0"	
v6 (E)	10	#4	3'-8"	
v9 (E)	16	#4	2'-8"	
v10 (E)	11	#6	9'-1"	
v11 (E)	8	#6	8'-1"	
v12 (E)	8	#6	7'-1"	
v13 (E)	11	#6	6'-1"	
v14 (E)	12	#4	13'-8"	
v15 (E)	12	#4	10'-9"	
Concrete Structures			Cu. Yd.	33.4
Reinforcement Bars (Epoxy Coated)			Pound	2,255
Furnishing Steel Piles W Section W27x178			Foot	60
Setting Piles in Rock			Each	4
Geocomposite Wall Drain			Sq. Yd.	25.5
Form Liner Textured Surface			Sq. Ft.	136

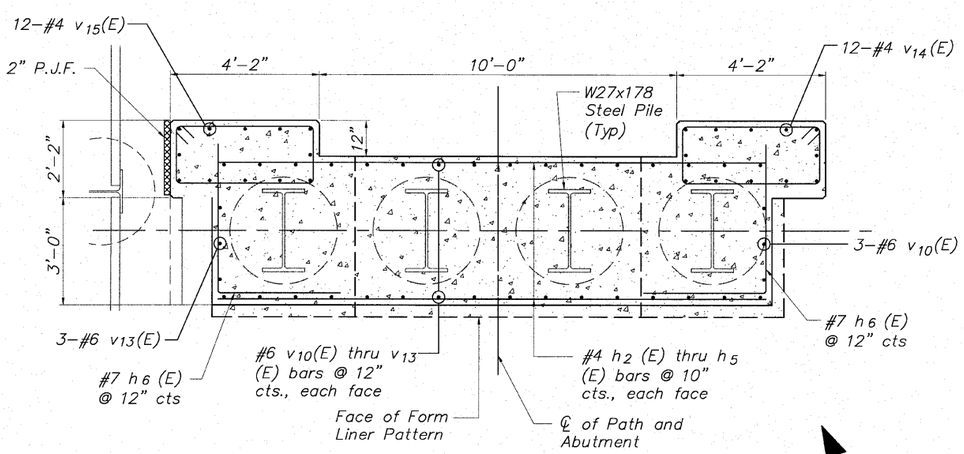

SECTION B-B

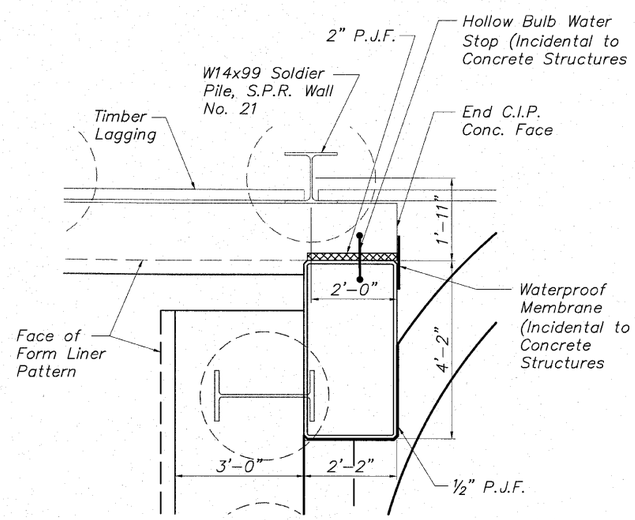

WEST SIDE NORTH ABUTMENT PLAN

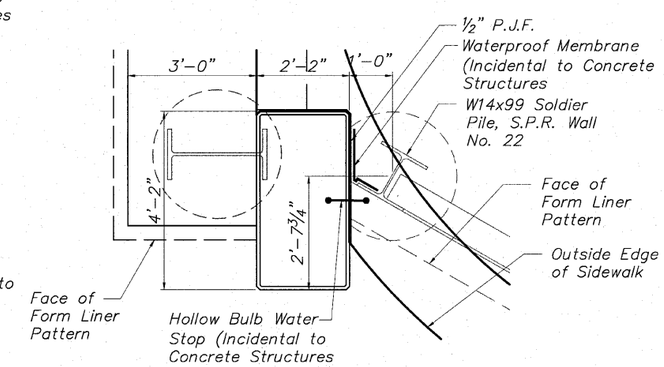

EAST SIDE NORTH ABUTMENT PLAN

NORTH ABUTMENT DETAILS
CABLE-STAYED PEDESTRIAN BRIDGE
PEDESTRIAN RIVERWALK
ALONG THE ROCK RIVER
WINNEBAGO COUNTY
SECTION NO. 06-00543-00-BT
STATION 209+48.25
STRUCTURE NO. 101-6350

DESIGNED	CTB
CHECKED	AAG
DRAWN	JAW
PEER REVIEWED	

McClure Engineering Associates, Inc.
7282 Argus Drive (815) 398-2332
Rockford, Illinois 61107-5837 Fax (815) 398-2496
Design Firm License: Illinois#184-000816

SHEET NO. 8

11 SHEETS

F.A. RTE.	SECTION	COUNTY	TOTAL SHEETS	SHEET NO.
	06-00543-00-BT	WINNEBAGO	148	63
		CONTRACT NO.		85521
FED. ROAD DIST. NO.	ILLINOIS	FED. AID PROJECT		

STATE OF ILLINOIS
DEPARTMENT OF TRANSPORTATION

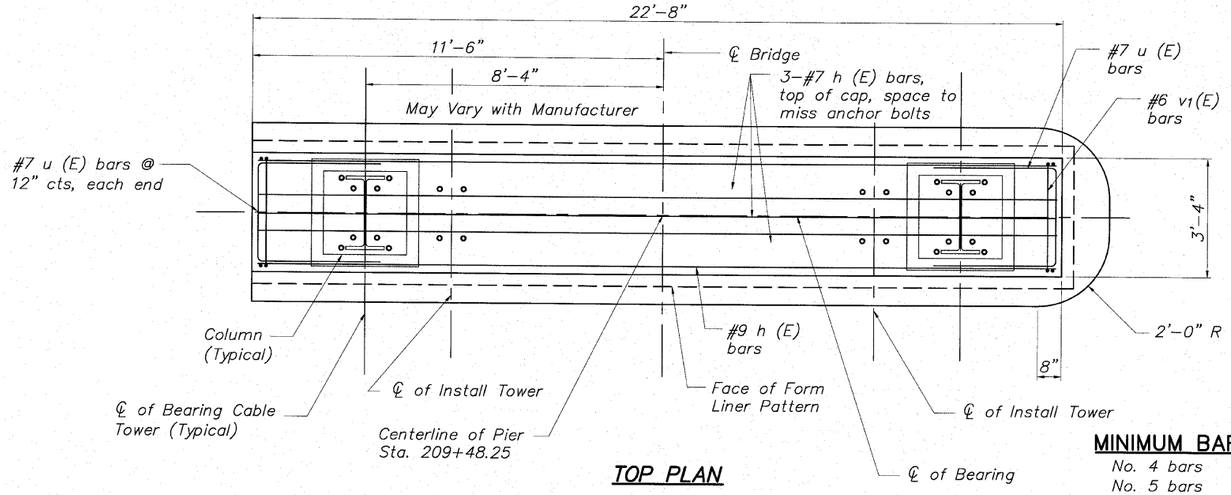

TOP PLAN

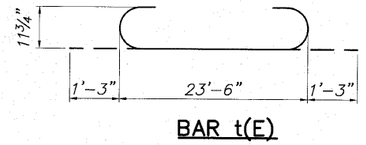

BAR t(E)

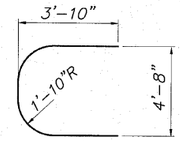

BAR u1(E)

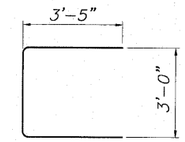

BAR u(E)

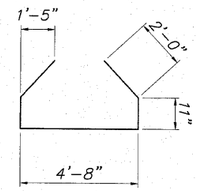

BAR v2(E)

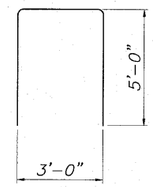

BAR v1(E)

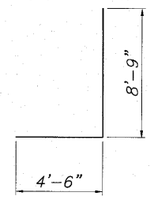

BAR v(E)

BILL OF MATERIAL

Pier For Struct. No. 101-6350

Bar	No.	Size	Length	Shape
h (E)	21	#7	22'-4"	
h_1 (E)	4	#5	22'-4"	
t (E)	59	#9	26'-0"	
t_1(E)	20	#6	23'-6"	
u (E)	18	#7	9'-10"	
u_1 (E)	2	#5	10'-9"	
v (E)	110	#8	13'-3"	
v_1(E)	55	#6	13'-0"	
v_2(E)	28	#4	10'-6"	
w (E)	40	#6	23'-6"	
Structure Excavation			Cu. Yd.	60
Rock Excavation for Structures			Cu. Yd.	85
Concrete Structures			Cu. Yd.	94.7
Reinforcement Bars (Epoxy Coated)			Pound	13,891
Form Liner Textured Surface			Sq. Ft.	303

MINIMUM BAR LAP

No. 4 bars	1'-8"
No. 5 bars	2'-2"
No. 6 bars	2'-7"
No. 7 bars	3'-5"
No. 8 bars	4'-6"
No. 9 bars	5'-9"

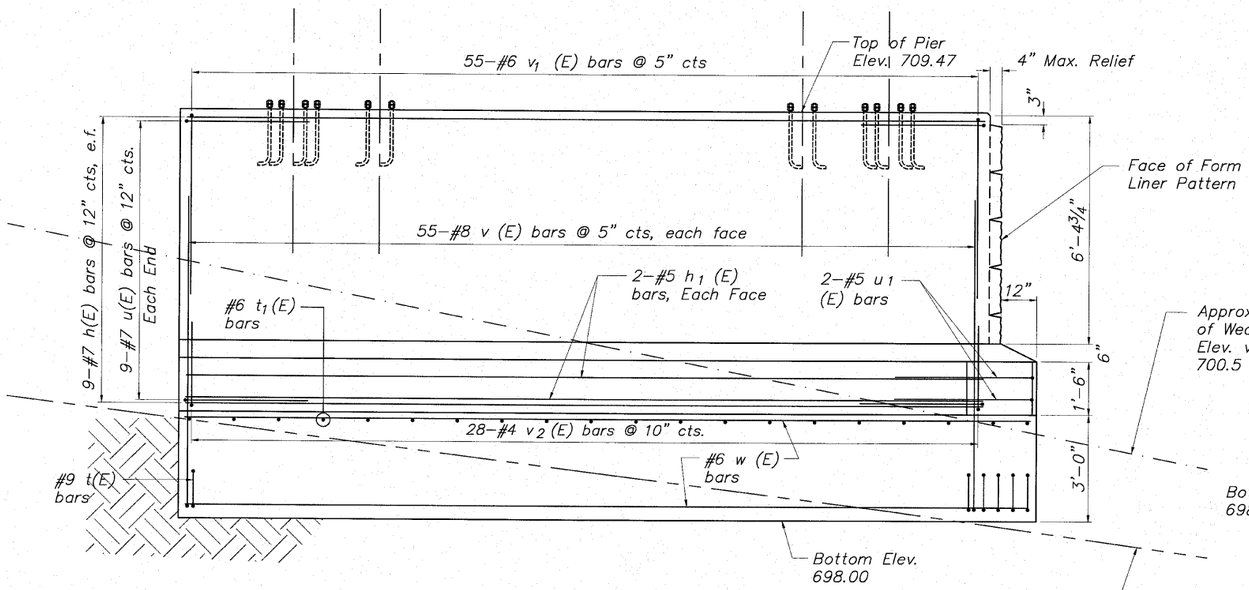

ELEVATION

Note:
The Contractor shall notify the Engineer if Bottom of Footing Excavation is required below Elev. 698.00

* The Contractor shall verify Elevations and Dimensions with the Bridge Manufacturer.

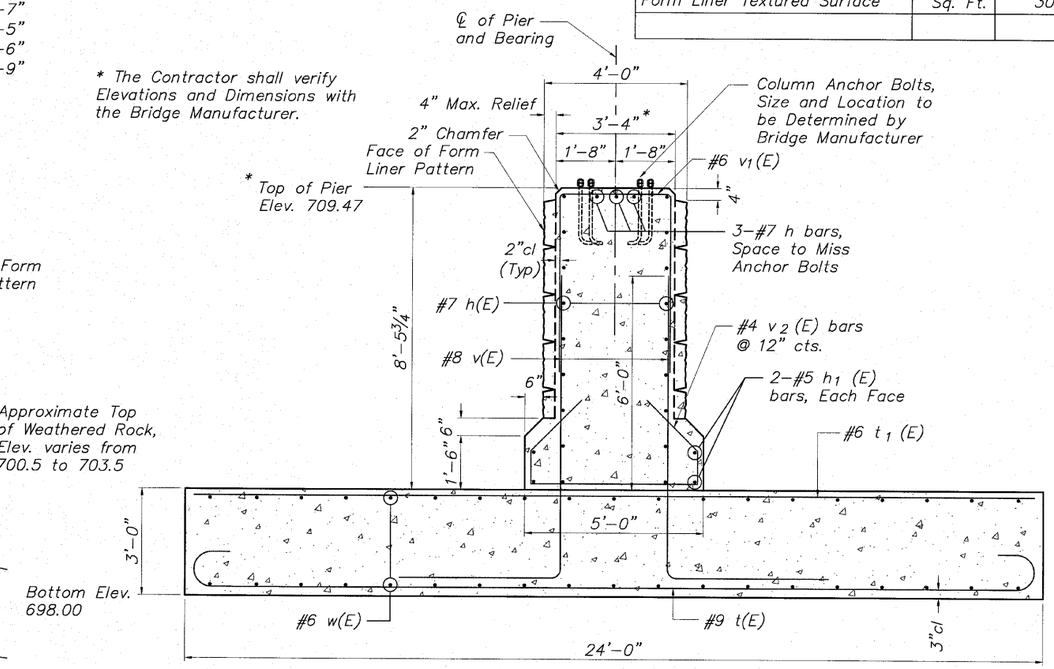

SECTION THRU PIER

PIER DETAILS
CABLE-STAYED PEDESTRIAN BRIDGE
PEDESTRIAN RIVERWALK
ALONG THE ROCK RIVER
WINNEBAGO COUNTY
STATION 209+48.25
STRUCTURE NO. 101-6350

DESIGNED	CTB
CHECKED	AAG
DRAWN	JAW
PEER REVIEWED	

McClure Engineering Associates, Inc.
7282 Argus Drive (815) 398-2332
Rockford, Illinois 61107-5837 Fax (815) 398-2496
Design Firm License: Illinois#184-000816

SHEET NO. 10
11 SHEETS

F.A. RTE.	SECTION	COUNTY	TOTAL SHEETS	SHEET NO.
	06-00543-00-BT	WINNEBAGO	148	64
		CONTRACT NO.		85521
FED. ROAD DIST. NO.	ILLINOIS	FED. AID PROJECT		

STATE OF ILLINOIS
DEPARTMENT OF TRANSPORTATION

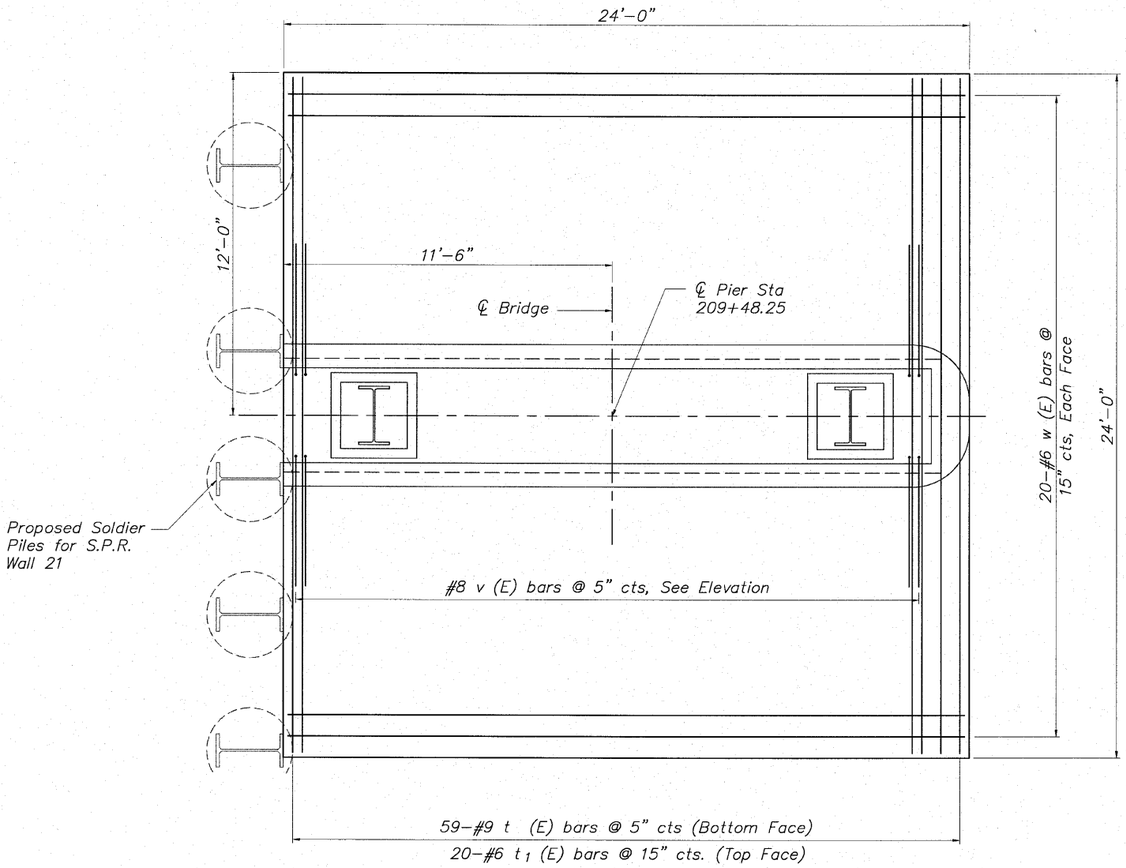

BASE SLAB PLAN

Note: The Contractor shall coordinate the location of the Pier with S.P. Wall 21.
Refer to S.P. Wall 21 Plans.

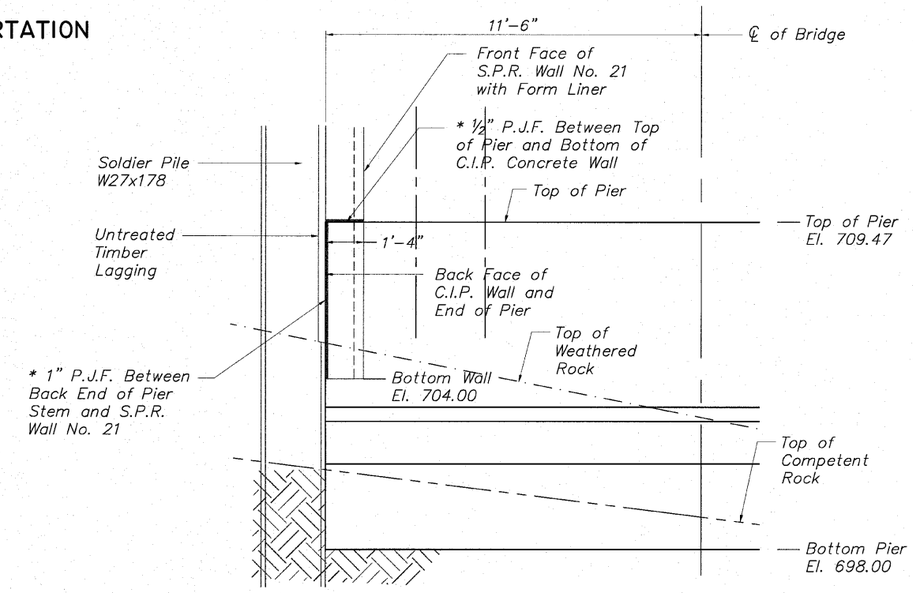

ELEVATION (Showing S.P.R. Wall No. 21)

* Cost Included with Concrete Structures

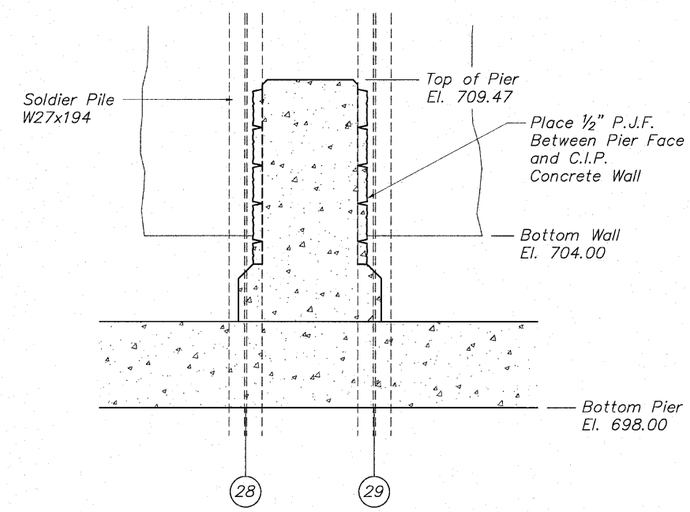

SECTION (Showing S.P.R. Wall No. 21)

PIER DETAILS
CABLE-STAYED PEDESTRIAN BRIDGE
PEDESTRIAN RIVERWALK
ALONG THE ROCK RIVER
WINNEBAGO COUNTY
STATION 209+48.25
STRUCTURE NO. 101-6350

DESIGNED	CTB
CHECKED	AAG
DRAWN	JAW
PEER REVIEWED	

McClure Engineering Associates, Inc.
7282 Argus Drive Rockford, Illinois 61107-5637
(815) 398-2332 Fax (815) 398-2496
Design Firm License: Illinois#184-000816

SHEET NO. 10
11 SHEETS

F.A. RTE.	SECTION	COUNTY	TOTAL SHEETS	SHEET NO.
	06-00543-00-BT	WINNEBAGO	148	65
		CONTRACT NO.		85521
FED. ROAD DIST. NO.	ILLINOIS	FED. AID PROJECT		

STATE OF ILLINOIS

DEPARTMENT OF TRANSPORTATION

GENERAL NOTES:

1. All Structural Steel shall be AASHTO M 270 Grade 50 except as noted.
2. Reinforcement bars shall conform to the requirements of ASTM A706 Grade 60. See Special Provisions.
3. Reinforcement bars designated (E) shall be epoxy coated.
4. All construction joints shall be bonded.
5. No field welding will be permitted.
6. If the design reactions for the individual superstructure units are larger than the reactions shown on the Substructure Layout, the Contractor shall redesign the affected substructure units, or verify the adequacy of the substructure as shown on the plans, submit the Design and Calculations signed and sealed by an Illinois Licensed Structural Engineer for the approval of the Engineer.
7. The Manufacturer shall coordinate with the Lighting Plan. Connections or clips for lighting brackets, conduit, pull boxes, and lighted rail shall be provided by the factory and factory welded.
8. Concrete sealer shall be applied to designated areas of the bearing seat and face of the back of abutment.
9. Bearing Seat surfaces shall be constructed or adjusted to the designated elevations within a tolerance of ⅛" (0.01 ft.). Adjustment shall be made either by grinding or by shimming the bearings.
10. Layout of the slope protection system may be varied to suit ground conditions in the field as directed by the Engineer.
11. When the deck pour is stopped for the day at one or more of the transverse bonded construction joints in the deck pouring sequence as shown, the next pour shall not be made until both of the following are met:
    1. At least 72 hours shall have elapsed from the end of the previous pour.
    2. The concrete strength shall have attained a minimum flexural strength of 650 psi or a minimum compressive strength of 3500 psi.
12. It shall be the responsibility of the Contractor to verify all dimensions and conditions existing in the field prior to construction and ordering materials.
13. Contractor shall be responsible for any dewatering in accordance with the erosion control plan at no additional cost to the contract.
14. Anchor bolts and bearings shall be designed and provided by the manufacturer. Anchor bolt projection shall be specified on the shop drawings. Anchor bolts at fixed bearings may be either cast-in-place or installed in holes after the supported member is in place. Anchor bolts at expansion bearings shall be drilled after the members are in place.
15. Drilled and set anchor bolts shall be installed according to Article 521.06 of the Standard Specifications.
16. The cost of furnishing and installing anchor bolts and bearing assemblies shall be included in the cost of the Pedestrian Cable-Stayed Truss Superstructure.
17. Reinforcing bars shall be lapped a minimum as shown on plans where splices occur. Radius bars shall be factory bent and delivered to the site with appropriate radius. Field bending will only be allowed to achieve form clearances.
18. Penetrations in the back of abutment for electrical conduit shall be located in the field prior to forming the back of abutment. Coordinate locations with Electrical Plans.
19. Exposed surfaces of concrete shall be given a "rubbed" finish except where form liner is specified. Form liner pattern shall be as specified to match wall facings.
20. Exposed edges shall have a ¾" x 45° chamfer except as shown otherwise. Chamfers on vertical edges shall be continued a minimum of one foot below finished ground level.
21. The approximate embedment depth for the soldier pile tip is as provided on the plans and considers a penetration into competent rock of 5.5 feet (minimum) based on the soil boring information and uniaxial compressive rock strength value of 4,000 psi (minimum) as provided by Terracon Consultants, Inc. The actual top of rock elevation, which qualifies as competent rock meeting the minimum requirements of the design, shall be determined and field verified by the geotechnical engineer during the drilling operation at each soldier pile location. Final pile tip elevations shall be a minimum of 5.5 feet below actual top of competent rock elevations.
22. Backfill behind wall shall be placed to the lines and grades as shown on the plans. The Contractor shall take care to ensure the use of suitable material and proper compaction of all fill areas. Compaction shall be performed with a loose thickness of no more than 8" and each lift shall be compacted to a density equal to or greater than 95% standard proctor maximum dry density (ASTM D-698) taking care not to over compact the soil density behind the wall. Moisture shall be within -2 to +3 percent of optimum. No heavy equipment shall be allowed within 6 feet of the wall during backfilling and compaction. Compaction shall be by hand method, "walk behind", equipment in the areas within 6 feet of the face of the wall.
23. The Superstructure of the Prefabricated Cable-Stayed Bridge and all elements of the Superstructure above "Top of Pier", including all truss members, railings, bearings, base plates, grout, anchor bolts (size, location, and embedment), concrete deck, drainage scuppers, and all attachments on the Superstructure shall be designed by the Contractor. Superstructure details as shown in these Plans along with the Special Provision "Pedestrian Truss Superstructure-Prefabricated Cable-Stayed" shall be the basis for preparation of detailed Superstructure Plans.
24. Top of Pier elevation and Bearing Seat to Top of Abutment dimensions shall be verified by the Bridge Manufacturer prior to the start of construction. The Contractor shall coordinate and verify final pier shaft dimensions with the Bridge Manufacturer to ensure proper placement of tower base plates.

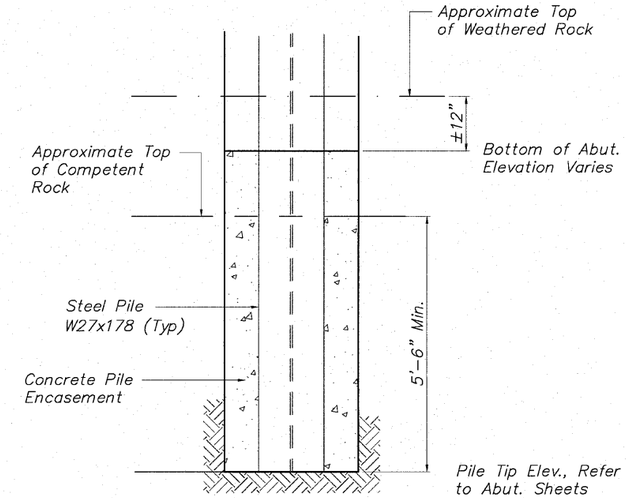

ELEVATION

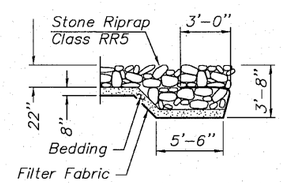

FLANK STONE RIPRAP TREATMENT

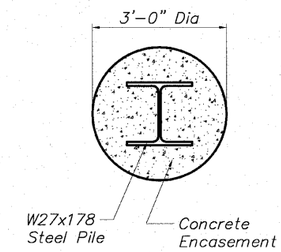

PLAN

PILE ENCASEMENT SECTION

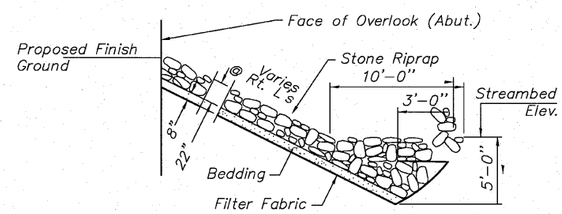

TOE STONE RIPRAP TREATMENT

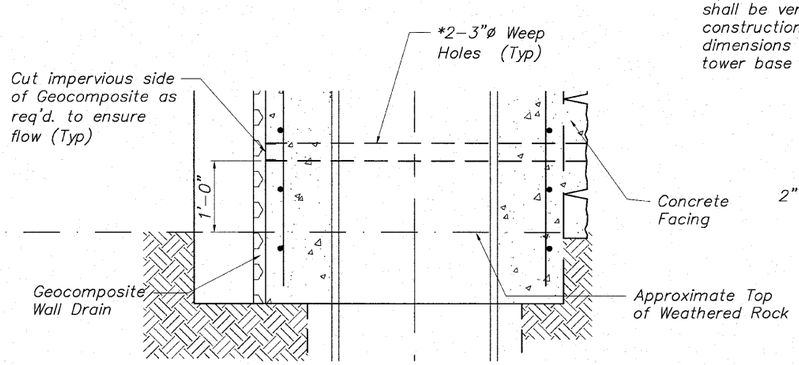

WEEP HOLE DETAIL

* Included in the cost for Concrete Structures

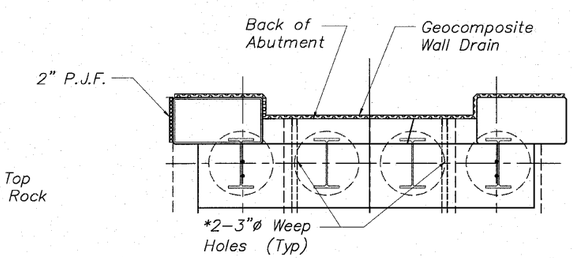

WALL DRAIN DETAIL

Note:
Location of Weep Holes as Shown on Plan View or as Directed by the Engineer based on Field Conditions

TYPICAL DETAILS AND GENERAL NOTES
CABLE-STAYED PEDESTRIAN BRIDGE
PEDESTRIAN RIVERWALK
ALONG THE ROCK RIVER
WINNEBAGO COUNTY
SECTION NO. 06-00543-00-BT
STATION 209+48.25
STRUCTURE NO. 101-6350

DESIGNED	CTB
CHECKED	AAG
DRAWN	JAW
PEER REVIEWED	

McClure Engineering Associates, Inc.
7282 Argus Drive Rockford, Illinois 61107-5837
(815) 398-2332 Fax (815) 398-2496
Design Firm License: Illinois#184-000816

SHEET NO. 11

11 SHEETS

F.A. RTE.	SECTION	COUNTY	TOTAL SHEETS	SHEET NO.
	06-00543-00-BT	WINNEBAGO	148	66
		CONTRACT NO.		85521
FED. ROAD DIST. NO.	ILLINOIS	FED. AID PROJECT		

BENCH MARK: North Bonnet Bolt on Fire Hydrant South of Museum Entrance on the East side of N. Main Street Elev.=736.60

EXISTING STRUCTURE: NONE

STATE OF ILLINOIS
DEPARTMENT OF TRANSPORTATION

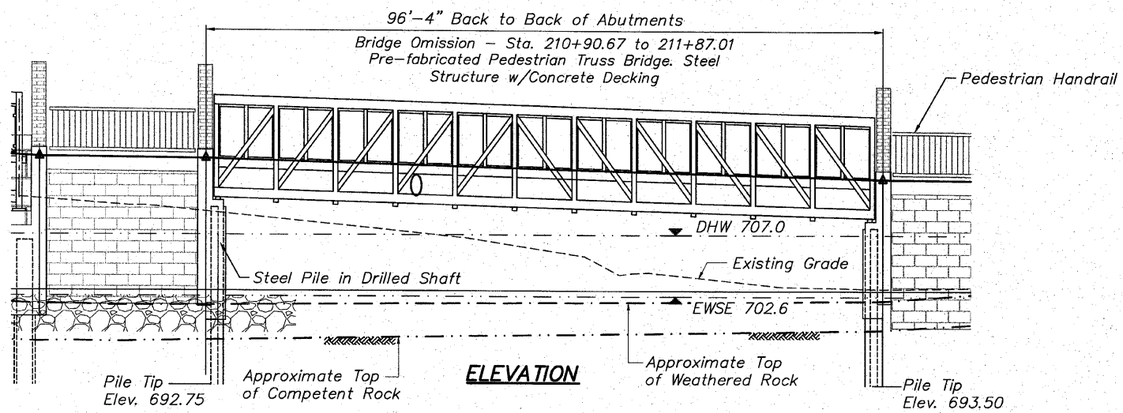

ELEVATION

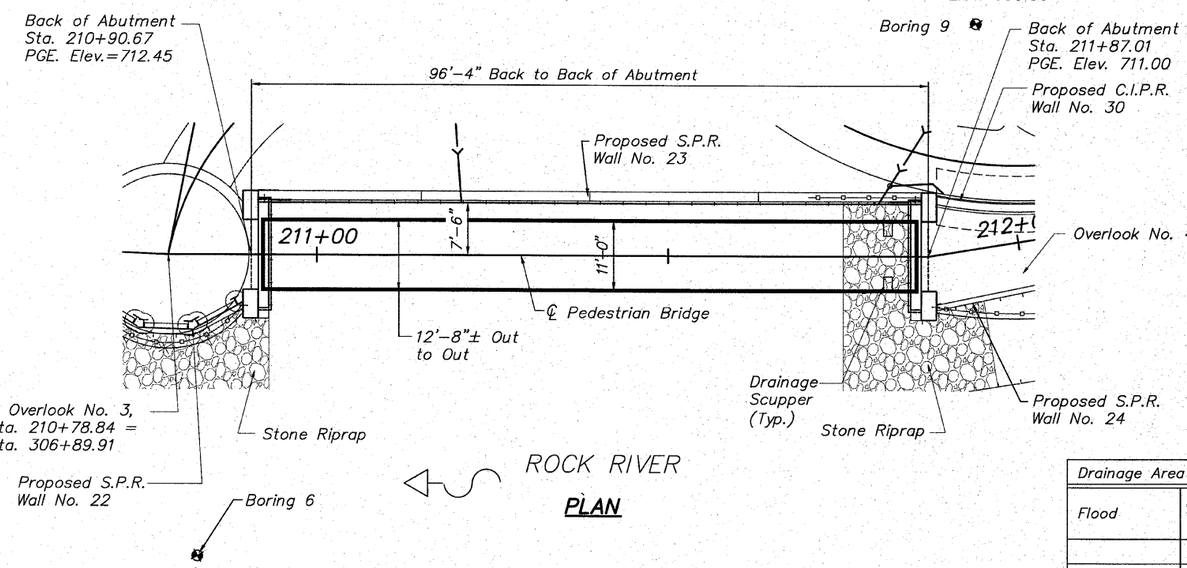

PLAN

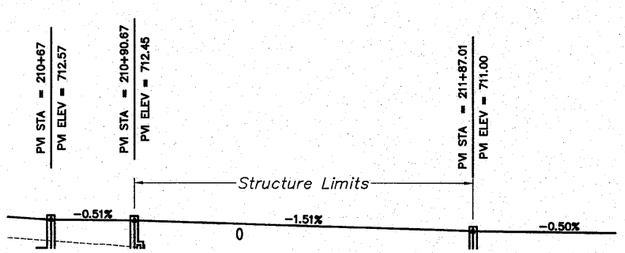

PROFILE GRADE
(Along ℄ Pedestrian Walk)

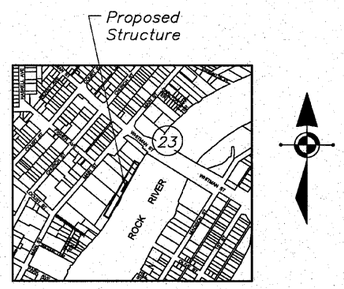

Section 23, Township 44 North, Range 1 East of the 3rd Principal Meridian

LOCATION SKETCH

SCALES:

PLAN: 1"= 10'

PROFILE: 1" = 10' HOR.
1" = 5' VERT.

0 10 20
Scale in Feet

INDEX OF BRIDGE SHEETS

DESIGN SCOUR ELEVATIONS	
South Abutment	North Abutment
700.0	700.0

Drainage Area = 6400 Sq.Mi.					Low Grade Elev. 709.00 @ Sta 213+04.17				
Flood	Freq. Yr.	Q C.F.S.	Opening Sq.Ft.		Nat H.W.E.	Head – Ft.		Headwater El.	
			Exist.	Prop.		Exist.	Prop.	Exist.	Prop.
Design	100	41,500	N/A	367	707.0	N/A	N/A	N/A	N/A
Base	100	41,500	N/A	367	707.0	N/A	N/A	N/A	N/A
Max. Calc.	500		N/A	367	709.6	N/A	N/A	N/A	N/A

TOTAL BILL OF MATERIALS

ITEM	UNIT	SUPER	SUB	TOTAL
Prefabricated Pedestrian Truss Bridge	Sq. Ft.	1,097		1,097
Structure Excavation	Cu. Yd.		37.0	37.0
Rock Excavation For Structures	Cu. Yd.		19.6	19.6
Concrete Structures	Cu. Yd.		41.9	41.9
Reinforcement Bars (Epoxy Coated)	Pound		2,870	2,870
Furnishing Soldier Pile W Section, W14x99	Foot		113	113
Setting Piles in Rock	Each		8	8
PCC Pavement, 7 ½"	Sq. Yd.	121.8		121.8
Geocomposite Wall Drain	Sq. Yd.		47.0	47.0
Form Liner Textured Surface	Sq. Ft.		243	243
Rubbed Finish	Sq. Ft.		168	168

Refer to Sheet 8 for GENERAL NOTES

HIGHWAY CLASSIFICATION
Rockford Pedestrian Riverwalk
Functional Class: Pedestrian

DESIGN STRESSES
FIELD UNITS
f'c = 3,500 psi
fy = 60,000 psi (Reinforcement)
fy = 50,000 psi (M270 Grade 50) – Soldier Pile

PREFABRICATED BRIDGE UNITS
fy = 50,000 psi (M270 Grade 50)
See Special Provisions for "Pedestrian Truss Superstructure"

LOADING
Pedestrian/Bicycle Design Loading: 85 psf
Vehicular: H–10

DESIGN SPECIFICATIONS
Americans with Disabilities Act (ADA)
2002 AASHTO "Standard Specifications for Highway Bridges"
17th Edition, AASHTO "Guide Specifications for Design of Pedestrian Bridges"

SEISMIC DATA
Seismic Performance Category (SPC) = A
Horizontal Bedrock Acceleration Coefficient (A) = 0.0325g
Site Coefficient (S) = 1.0

STATION 211+38.84
BUILT 2011 BY
CITY OF ROCKFORD
SECTION No. 06–00543–00–BT
LOADING H–10
STR No. 101–6351

NAME PLATE

REVIEWED AND APPROVED
FOR STRUCTURAL ADEQUACY ONLY
EXCLUDING PREFABRICATED PEDESTRIAN TRUSS

LICENSED STRUCTURAL ENGINEER TODD C. UDE 081-005764 Exp 11/30/2010 STATE OF ILLINOIS

9/9/2010
Todd C. Ude

ALI A. GHARAMATI 081-008080 LICENSED STRUCTURAL ENGINEER OF MOLINE STATE OF ILLINOIS

Signature
9/8/10
Date

GENERAL PLAN & ELEVATION
PEDESTRIAN TRUSS BRIDGE
PEDESTRIAN RIVERWALK
ALONG THE ROCK RIVER
WINNEBAGO COUNTY
SECTION NO. 06–00543–00–BT
STATION 210+90.67 TO STATION 211+87.01
STRUCTURE NO. 101–6351

DESIGNED	CTB
CHECKED	AAG
DRAWN	JAW
PEER REVIEWED	

EXAMINED — 2010
ENGINEER OF BRIDGE DESIGN
PASSED
ENGINEER OF BRIDGES AND STRUCTURES

McClure Engineering Associates, Inc.
7282 Argus Drive (815) 398-2332
Rockford, Illinois 61107-5837 Fax (815) 398-2496
Design Firm License: Illinois#184-000816

SHEET NO. 1
8 SHEETS

F.A. RTE.	SECTION	COUNTY	TOTAL SHEETS	SHEET NO.
	06-00543-00-BT	WINNEBAGO	148	67
		CONTRACT NO.		85521
FED. ROAD DIST. NO.	ILLINOIS	FED. AID PROJECT		

STATE OF ILLINOIS
DEPARTMENT OF TRANSPORTATION

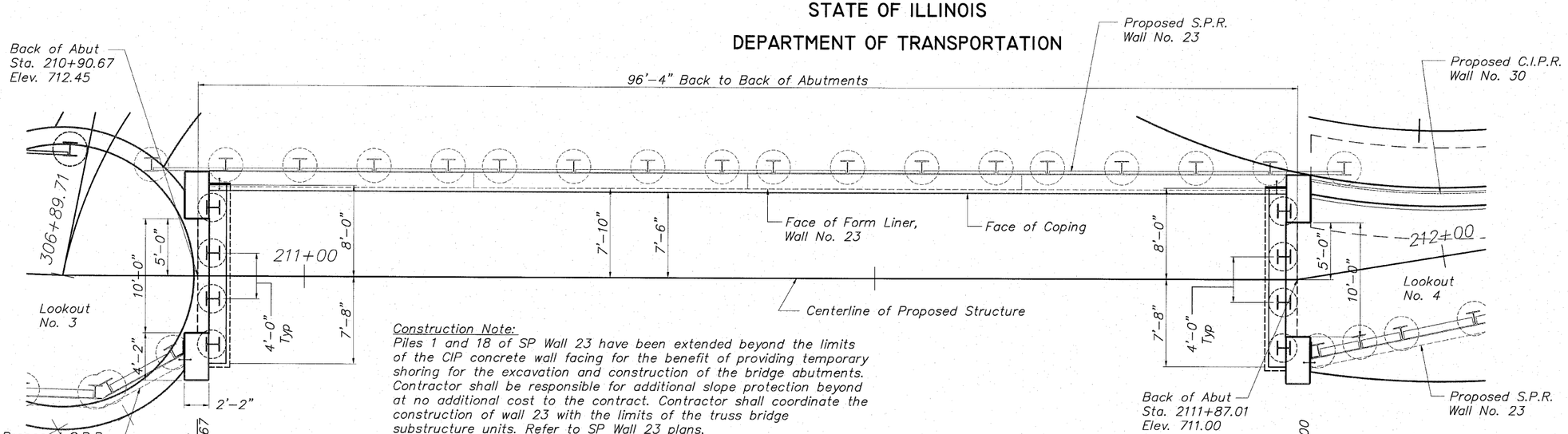

Construction Note:
Piles 1 and 18 of SP Wall 23 have been extended beyond the limits of the CIP concrete wall facing for the benefit of providing temporary shoring for the excavation and construction of the bridge abutments. Contractor shall be responsible for additional slope protection beyond at no additional cost to the contract. Contractor shall coordinate the construction of wall 23 with the limits of the truss bridge substructure units. Refer to SP Wall 23 plans,

SCALES:
PLAN: 1"= 5'
PROFILE: 1" = 5' HORIZONTAL
1" = 2.5' VERTICAL
0 5 10
Scale in Feet

SUBSTRUCTURE LAYOUT

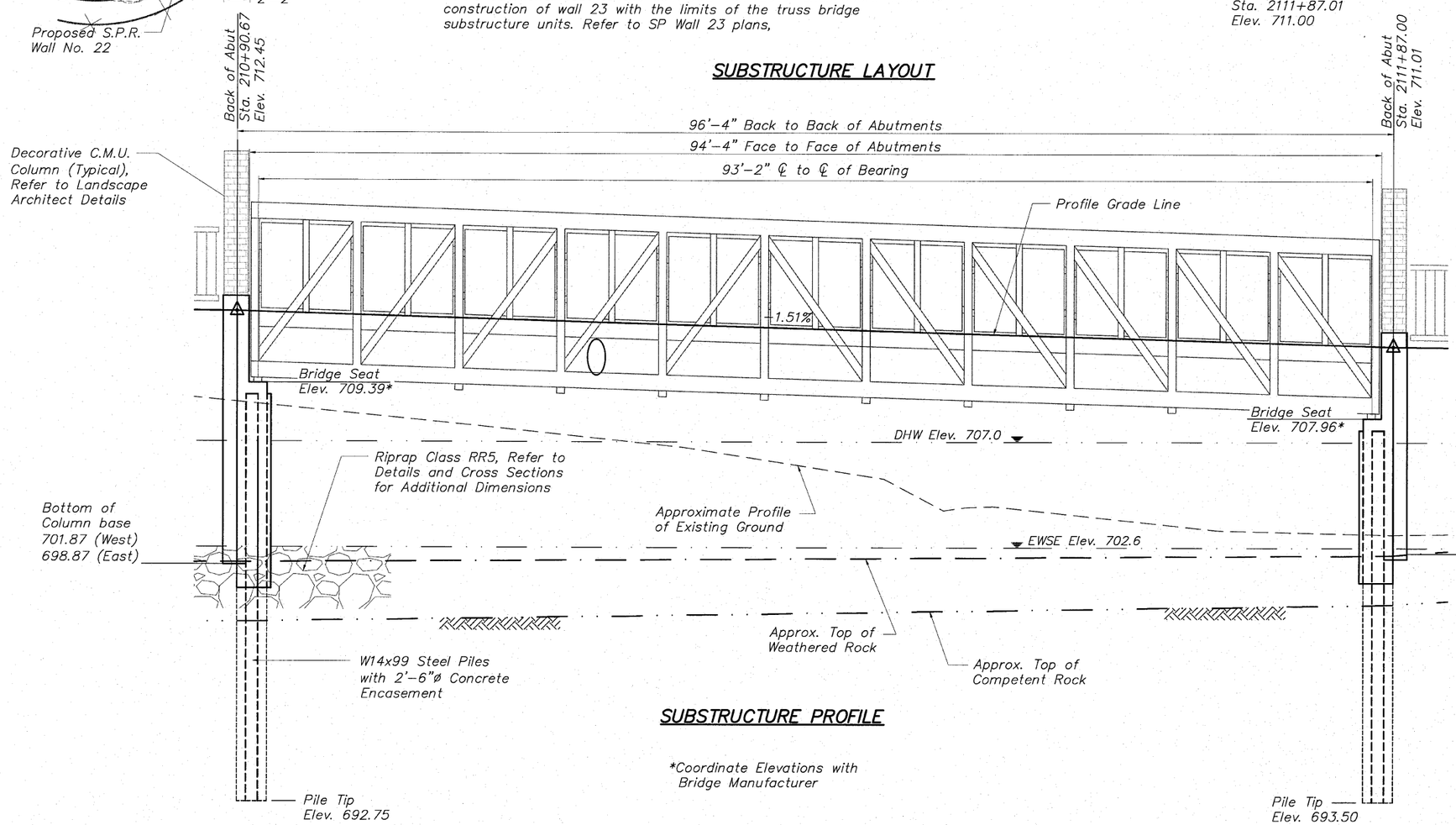

SUBSTRUCTURE PROFILE

*Coordinate Elevations with Bridge Manufacturer

BRIDGE REACTIONS

+ Downward Load			− Upward Load
	P (Kips)	H (Kips)	L (Kips)
Dead Load	40.3		
Uniform Live Load	22.1		
Vehicle Load	10.0		
Wind Uplift	−9.0		
Wind	3.9	12.4	
Thermal			5.2

P − Vertical Load Each Base Plate (4 per Bridge)
H − Horizontal Load per Abutment (2 per Bridge)
L − Longitudinal Load Each Base Plate (4 per Bridge)

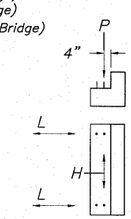

SUBSTRUCTURE LAYOUT
PEDESTRIAN TRUSS BRIDGE
PEDESTRIAN RIVERWALK
ALONG THE ROCK RIVER
WINNEBAGO COUNTY
SECTION NO. 06-00543-00-BT
STATION 210+90.67 TO
STATION 211+87.01
STRUCTURE NO. 101-6351

DESIGNED	CTB
CHECKED	AAG
DRAWN	JAW
PEER REVIEWED	

McClure Engineering Associates, Inc.
7282 Argus Drive Rockford, Illinois 61107-5837
(815) 398-2332 Fax (815) 398-2496
Design Firm License: Illinois#184-000816

SHEET NO. 2
8 SHEETS

F.A. RTE.	SECTION	COUNTY	TOTAL SHEETS	SHEET NO.
	06-00543-00-BT	WINNEBAGO	148	68
		CONTRACT NO.		85521
FED. ROAD DIST. NO.	ILLINOIS	FED. AID PROJECT		

STATE OF ILLINOIS
DEPARTMENT OF TRANSPORTATION

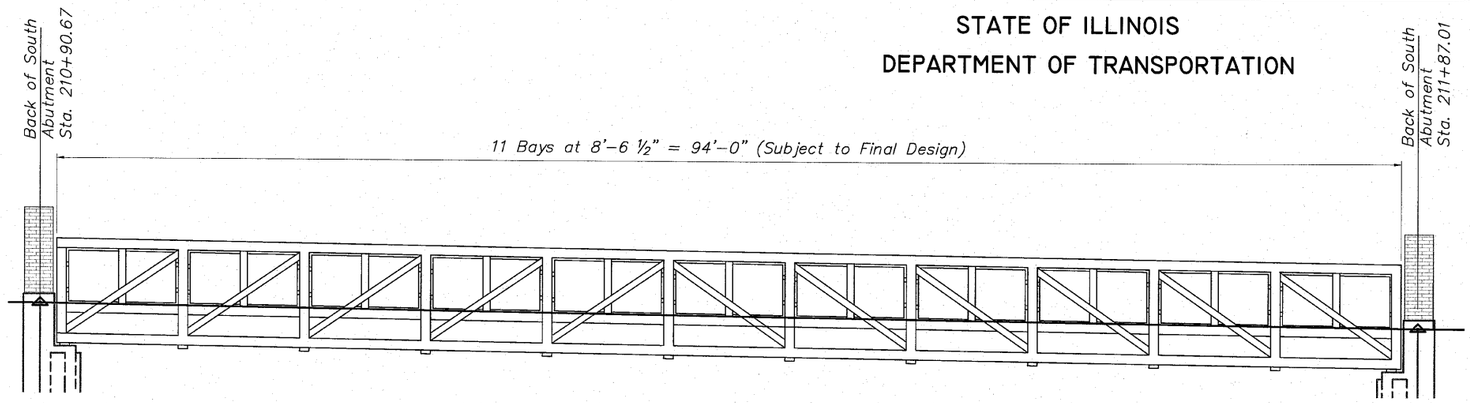

BRIDGE ELEVATION

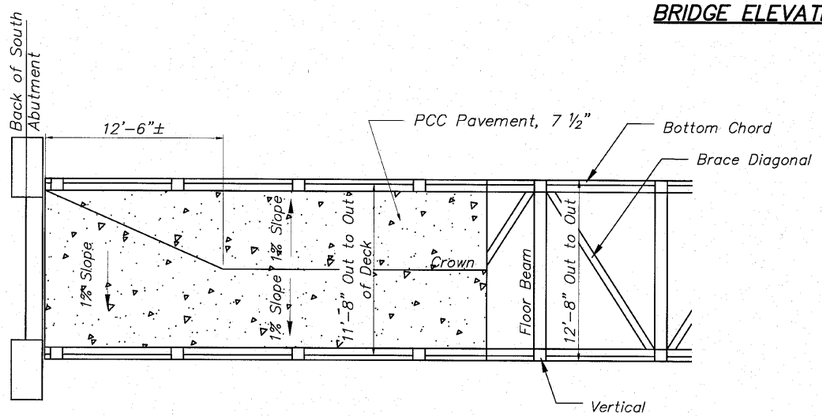

BRIDGE PLAN

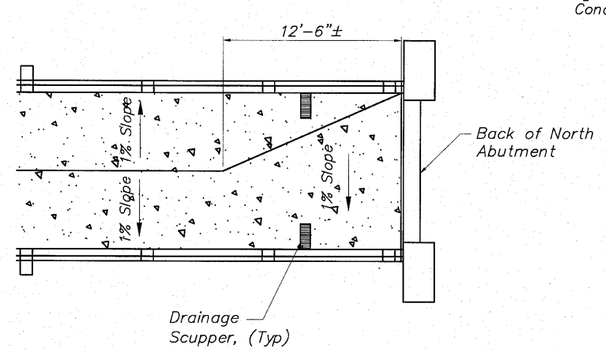

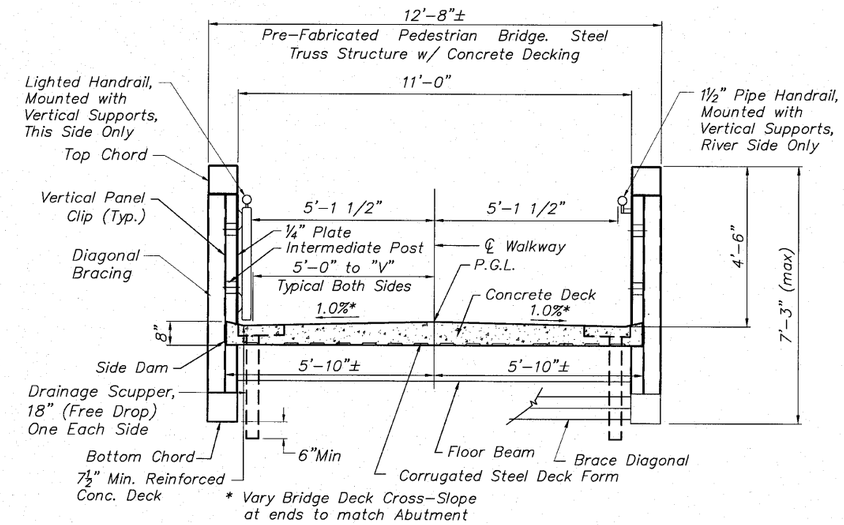

TYPICAL DECK SECTION

BORING NUMBER	STATION	OFFSET	GROUND ELEV.	EST. COMP. ROCK ELEV.
B-1	205+62	20.1' LT	728	N/A
B-2	206+69	44.3' LT	728	N/A
B-3	207+60	36.1' LT	728	701.5
B-4	208+20	43.1' RT	695	693.5
B-5	209+64	59.9' RT	693	691.0
B-6	210+83	40.15' RT	696	693.0
B-7	212+10	37.74' RT	696	694.5
B-8	213+71	34.17' RT	698	691.5
B-9	211+98	31.8' LT	716	706.0
B-10	211+67	77.9' LT	720	710.0
B-11	212+57	61.6' LT	721	705.0
B-12	211+12	200.5' LT	736	714.0
B-13	212+13	155.2' LT	730	709.0
B-14	209+57	39.5' LT	730	705.0
B-15	208+63	54.3' LT	730	700.0

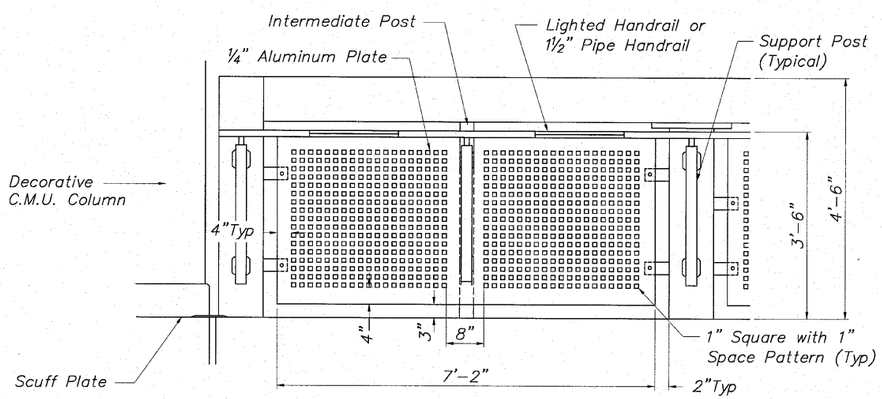

TYPICAL SIDE PANEL ELEVATION

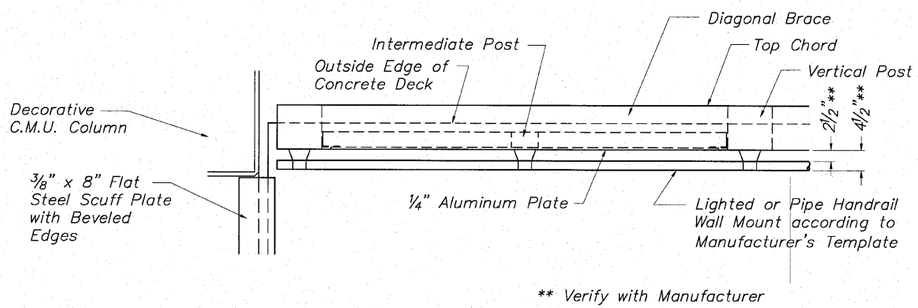

TYPICAL SIDE PANEL PLAN

SUPERSTRUCTURE DETAILS
PEDESTRIAN TRUSS BRIDGE
PEDESTRIAN RIVERWALK
ALONG THE ROCK RIVER
WINNEBAGO COUNTY
SECTION NO. 06-00543-00-BT
STATION 210+90.67 TO
STATION 211+87.01
STRUCTURE NO. 101-6351

DESIGNED	CTB
CHECKED	AAG
DRAWN	JAW
PEER REVIEWED	

McClure Engineering Associates, Inc.
7282 Argus Drive Rockford, Illinois 61107-5837
(815) 398-2332 Fax (815) 398-2496
Design Firm License: Illinois#184-000816

SHEET NO. 3
8 SHEETS

F.A. RTE.	SECTION	COUNTY	TOTAL SHEETS	SHEET NO.
	06-00543-00-BT	WINNEBAGO	148	69
		CONTRACT NO.		85521
FED. ROAD DIST. NO.	ILLINOIS	FED. AID PROJECT		

STATE OF ILLINOIS
DEPARTMENT OF TRANSPORTATION

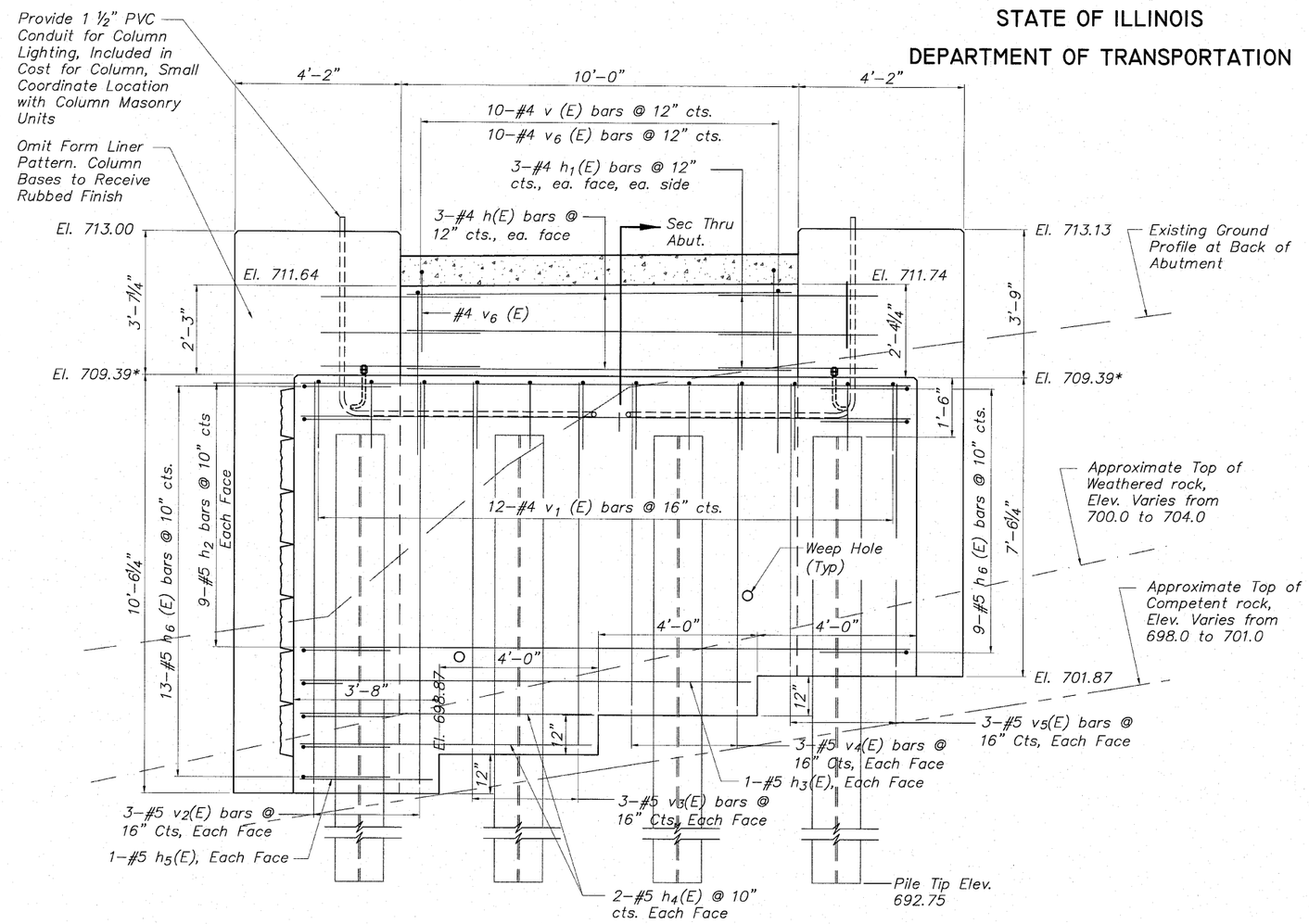

ELEVATION
Looking South

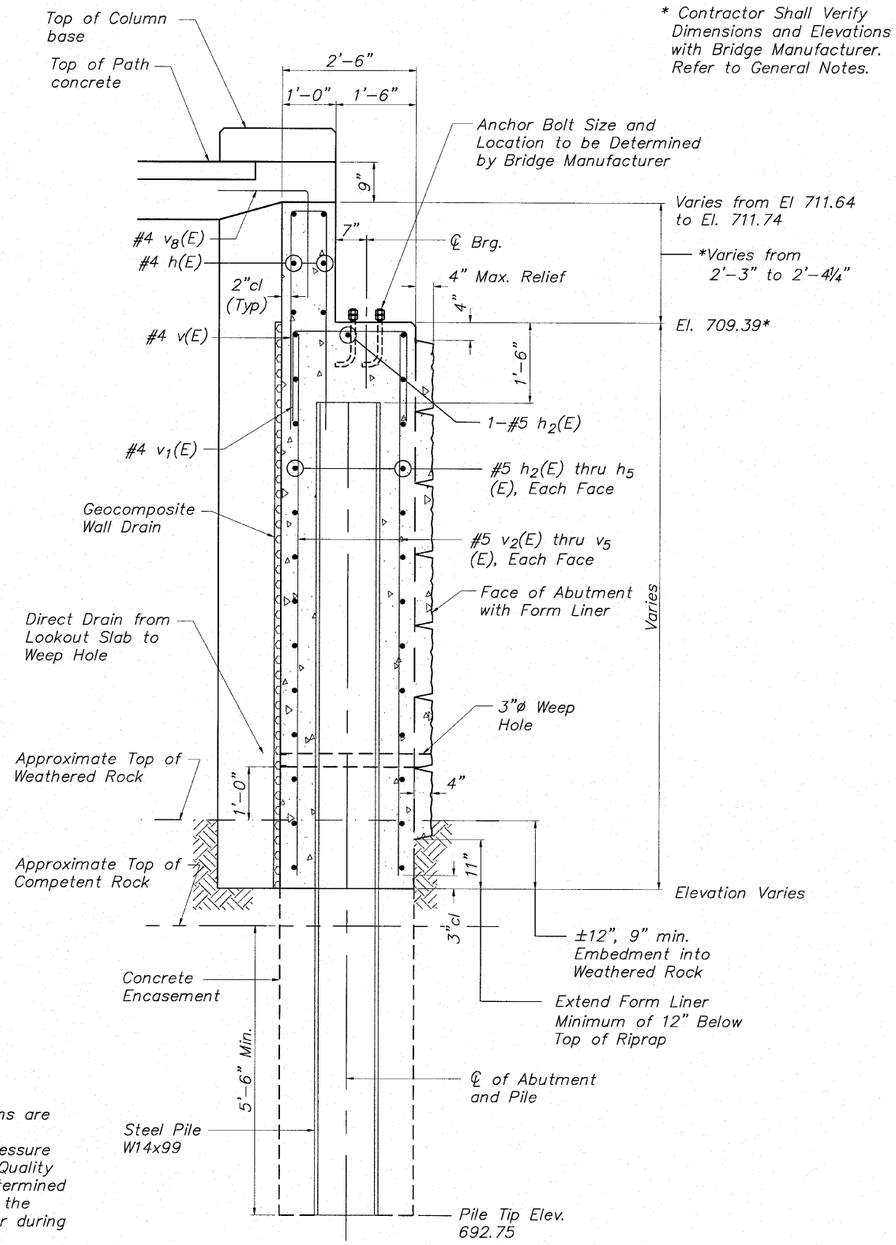

* Contractor Shall Verify Dimensions and Elevations with Bridge Manufacturer. Refer to General Notes.

SEC THRU SOUTH ABUT

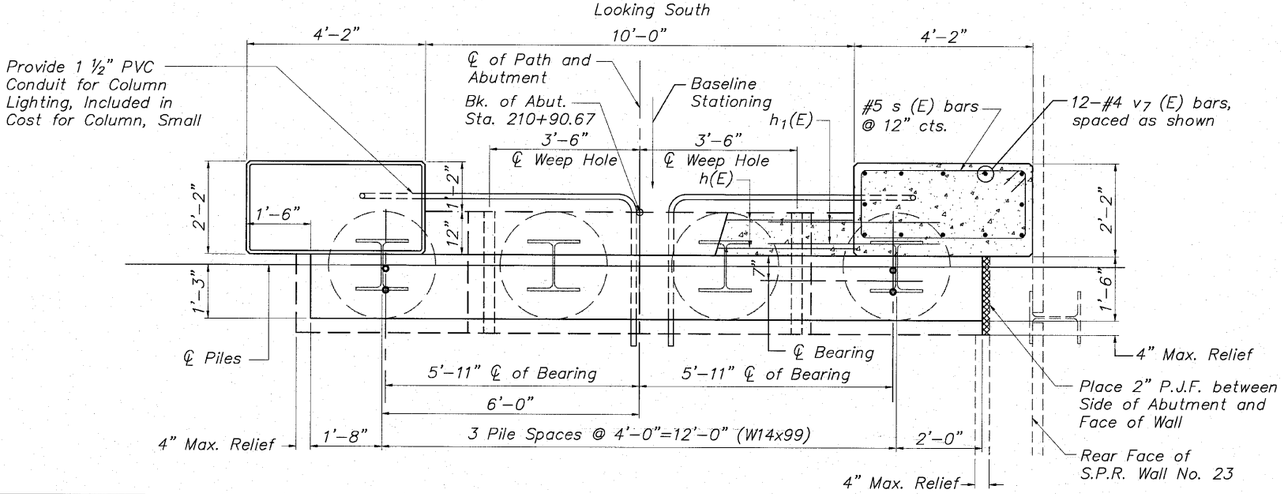

PLAN

NOTE:
Abutment Foundations are Designed for a Net Allowable Bearing Pressure of 25 tsf on Rock. Quality of Rock shall be determined and field verified by the Geotechnical Engineer during Excavation

SOUTH ABUTMENT DETAILS
PEDESTRIAN TRUSS BRIDGE
PEDESTRIAN RIVERWALK ALONG THE ROCK RIVER
WINNEBAGO COUNTY
SECTION NO. 06-00543-00-BT
STATION 210+90.67 TO STATION 211+87.01
STRUCTURE NO. 101-6351

DESIGNED	CTB
CHECKED	AAG
DRAWN	JAW
PEER REVIEWED	

McClure Engineering Associates, Inc.
7282 Argus Drive (815) 398-2332
Rockford, Illinois 61107-5837 Fax (815) 398-2496
Design Firm License: Illinois#184-000816

SHEET NO. 4
8 SHEETS

F.A. RTE.	SECTION	COUNTY	TOTAL SHEETS	SHEET NO.
	06-00543-00-BT	WINNEBAGO	148	70
		CONTRACT NO.		85521
FED. ROAD DIST. NO.	ILLINOIS	FED. AID PROJECT		

STATE OF ILLINOIS
DEPARTMENT OF TRANSPORTATION

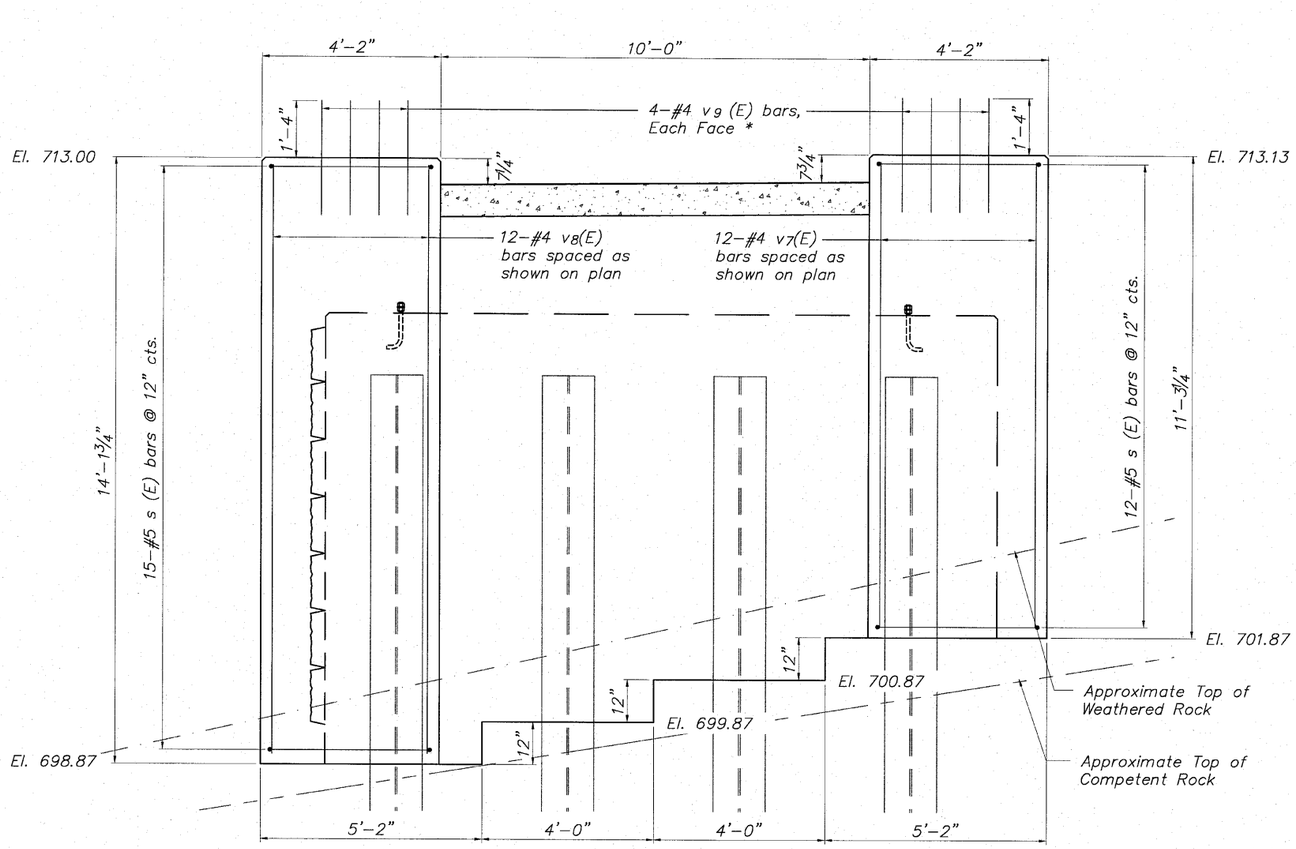

ELEVATION (Showing Column Reinforcement)
Looking South

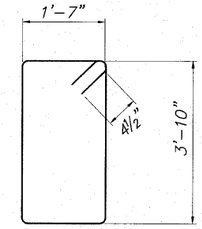

BAR s (E)

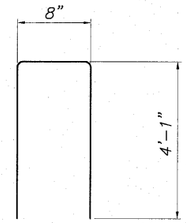

BAR v (E)

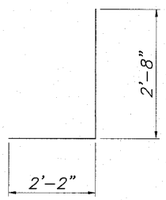

BAR h6(E)

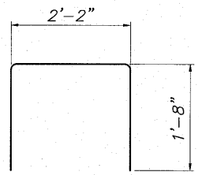

BAR v7(E)

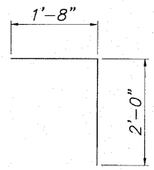

BAR v6(E)

MINIMUM BAR LAP

No. 4 bars	1'-8"
No. 5 bars	2'-2"

BILL OF MATERIAL

South Abutment For Struct. No. 101-6351

Bar	No.	Size	Length	Shape
h (E)	6	#4	9'-8"	
h1 (E)	12	#4	4'-0"	
h2 (E)	19	#5	15'-4"	
h3 (E)	2	#5	11'-4"	
h4 (E)	4	#5	7'-4"	
h5 (E)	2	#5	3'-4"	
h6 (E)	22	#5	4'-10"	
s (E)	27	#5	11'-7"	
v (E)	10	#4	8'-10"	
v1 (E)	12	#4	5'-6"	
v2 (E)	8	#5	10'-1"	
v3 (E)	6	#5	9'-1"	
v4 (E)	6	#5	8'-1"	
v5 (E)	8	#5	7'-1"	
v6 (E)	10	#4	3'-8"	
v7 (E)	12	#4	10'-10"	
v8 (E)	12	#4	13'-8"	
v9 (E)	16	#4	2'-8"	
Concrete Structures			Cu. Yd.	22.2
Reinforcement Bars (Epoxy Coated)			Pound	1,480
Furnishing Soldier Pile W Section W14x99			Foot	61
Setting Piles in Rock			Each	4
Geocomposite Wall Drain			Sq. Yd.	25.9
Form Liner Textured Surface			Sq. Ft.	135

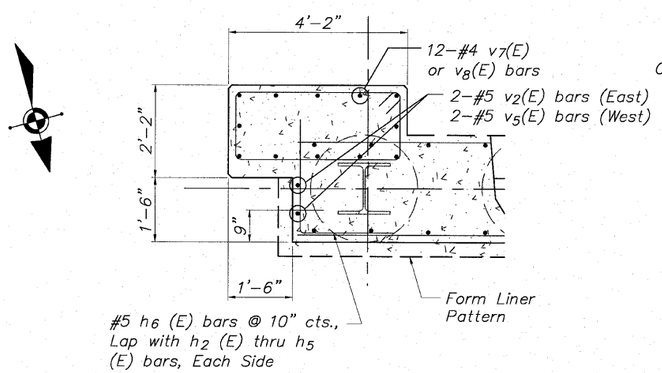

TYPICAL SECTION AT COLUMN

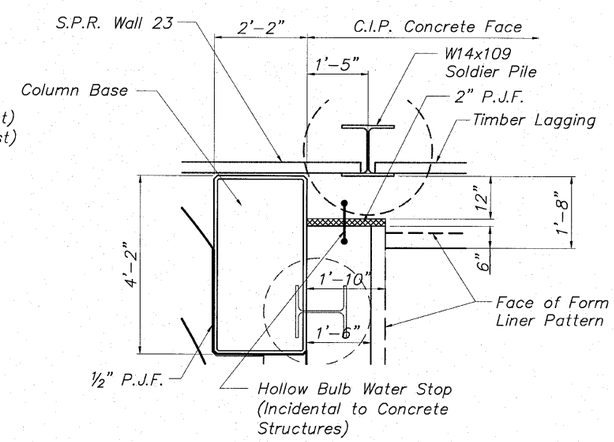

WEST SIDE SOUTH ABUT PLAN

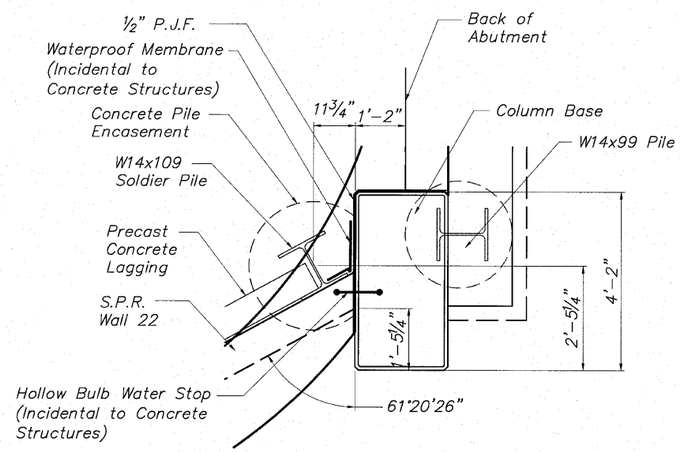

EAST SIDE SOUTH ABUT PLAN

SOUTH ABUTMENT DETAILS
PEDESTRIAN TRUSS BRIDGE
PEDESTRIAN RIVERWALK
ALONG THE ROCK RIVER
WINNEBAGO COUNTY
SECTION NO. 06-00543-00-BT
STATION 210+90.67 TO
STATION 211+87.01
STRUCTURE NO. 101-6351

DESIGNED	CTB
CHECKED	AAG
DRAWN	JAW
PEER REVIEWED	

McClure Engineering Associates, Inc.
7282 Argus Drive (815) 398-2332
Rockford, Illinois 61107-5837 Fax (815) 398-2496
Design Firm License: Illinois#184-000816

SHEET NO. 5
8 SHEETS

F.A. RTE.	SECTION	COUNTY	TOTAL SHEETS	SHEET NO.
	06-00543-00-BT	WINNEBAGO	148	71
		CONTRACT NO.		85521
FED. ROAD DIST. NO.	ILLINOIS	FED. AID PROJECT		

STATE OF ILLINOIS
DEPARTMENT OF TRANSPORTATION

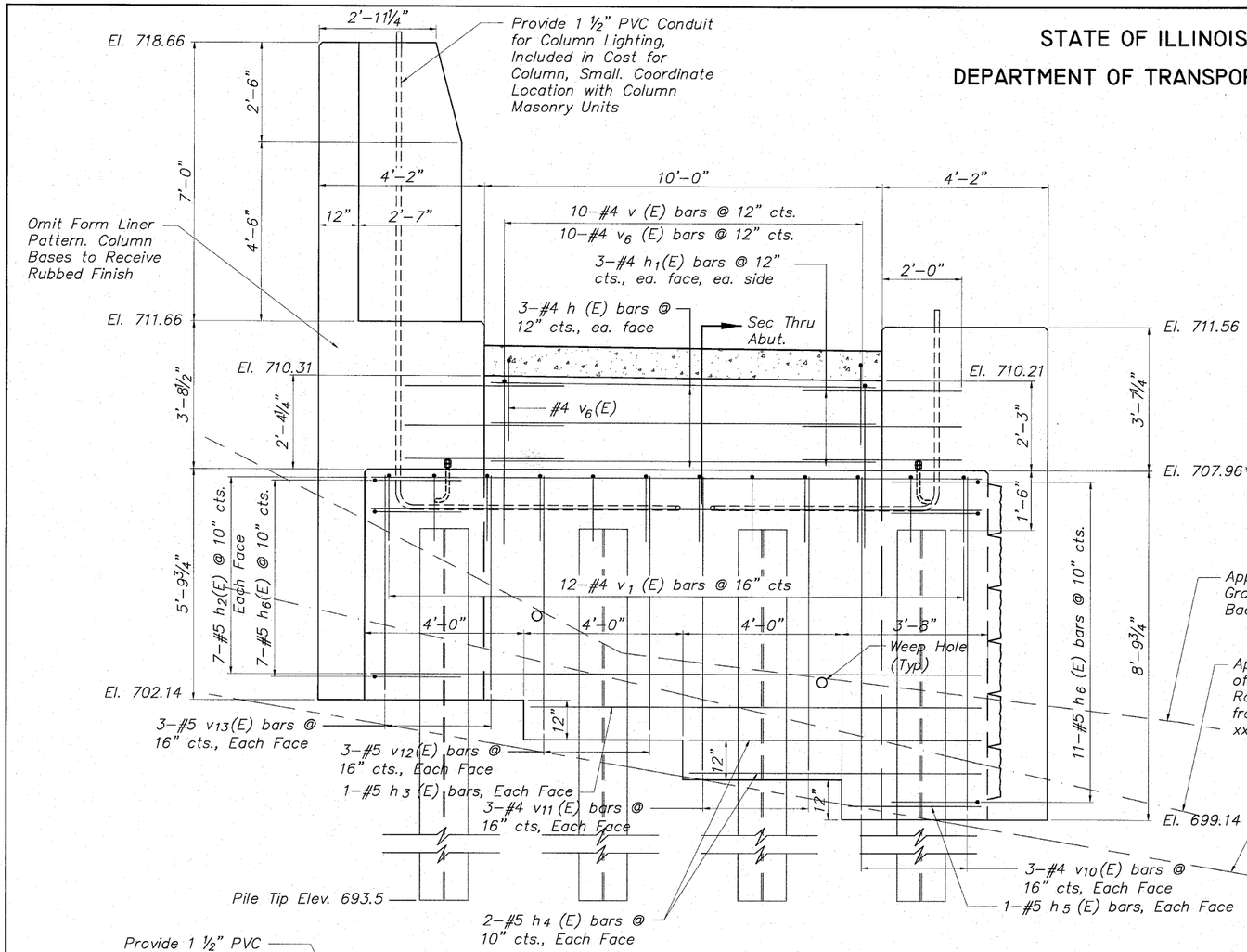

ELEVATION
Looking South

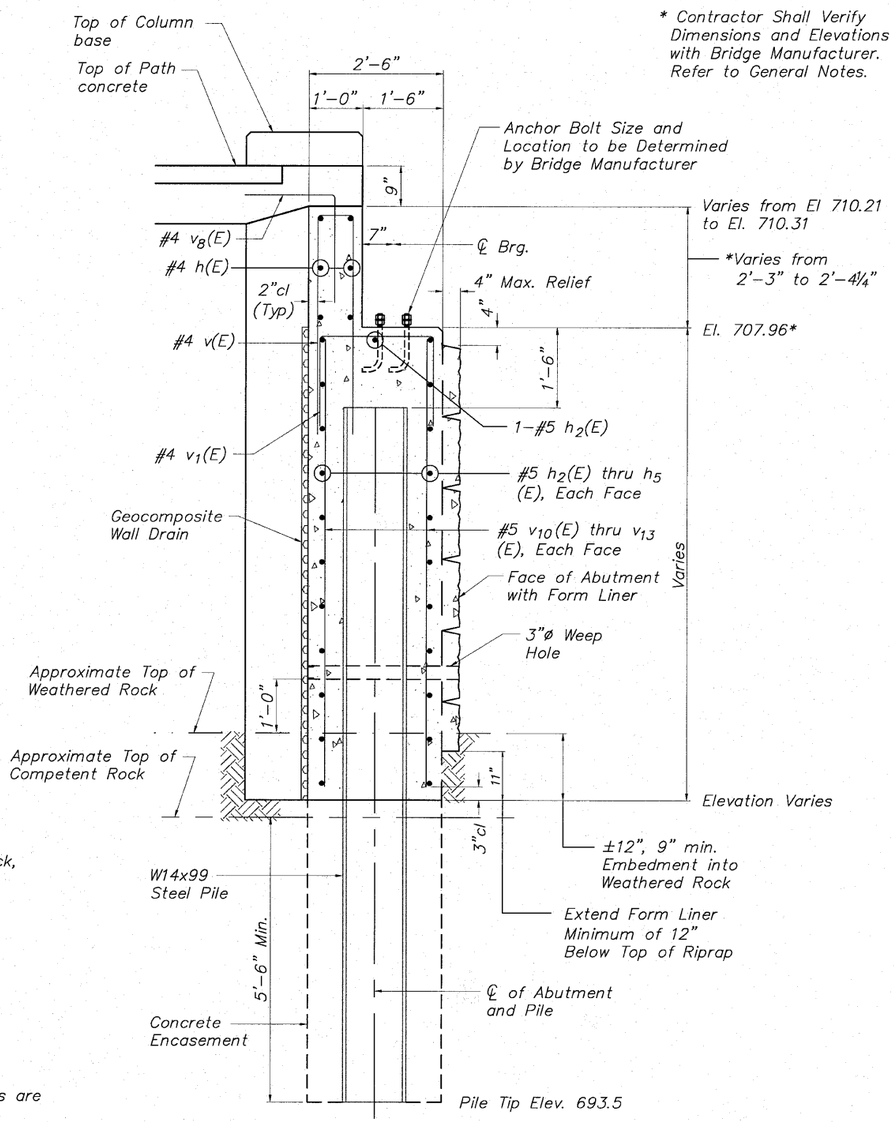

SEC THRU NORTH ABUT

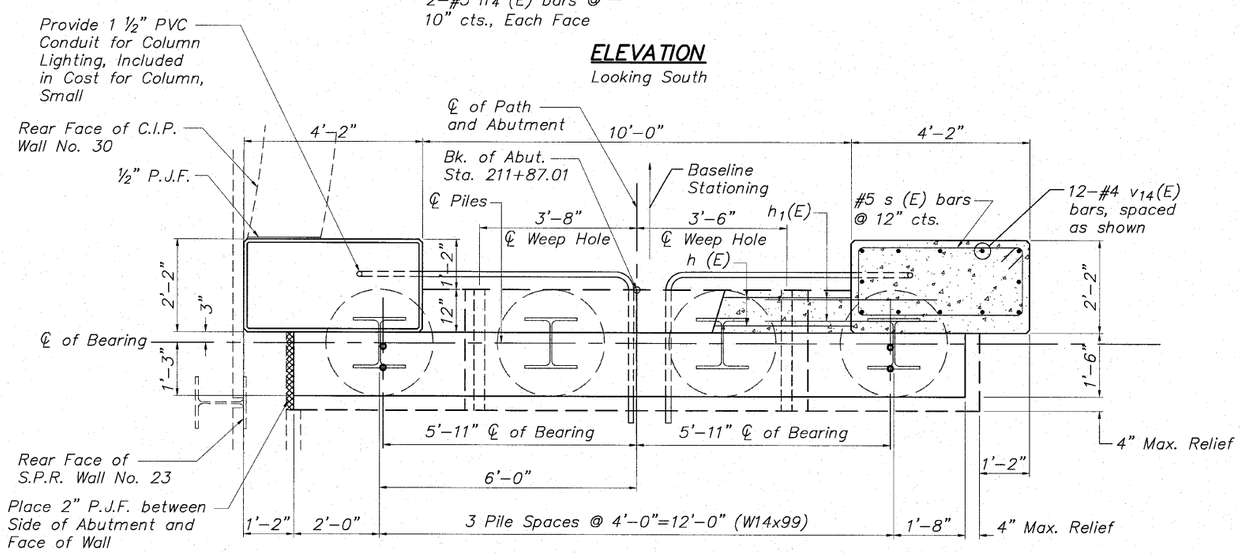

PLAN

Note:
Abutment Foundations are Designed for a Net Allowable Bearing Pressure of 25 tsf on Rock. Quality of Rock shall be determined and field verified by the Geotechnical Engineer during Excavation

NORTH ABUTMENT DETAILS
PEDESTRIAN TRUSS BRIDGE
PEDESTRIAN RIVERWALK
ALONG THE ROCK RIVER
WINNEBAGO COUNTY
SECTION NO. 06-00543-00-BT
STATION 210+90.67 TO
STATION 211+87.01
STRUCTURE NO. 101-6351

DESIGNED	
CHECKED	
DRAWN	JAW
PEER REVIEWED	

McClure Engineering Associates, Inc.
7282 Argus Drive Rockford, Illinois 61107-5837
(815) 398-2332 Fax (815) 398-2496
Design Firm License: Illinois#184-000816

SHEET NO. 6
8 SHEETS

F.A. RTE.	SECTION	COUNTY	TOTAL SHEETS	SHEET NO.
	06-00543-00-BT	WINNEBAGO	148	72
		CONTRACT NO.		85521
FED. ROAD DIST. NO.	ILLINOIS	FED. AID PROJECT		

STATE OF ILLINOIS

DEPARTMENT OF TRANSPORTATION

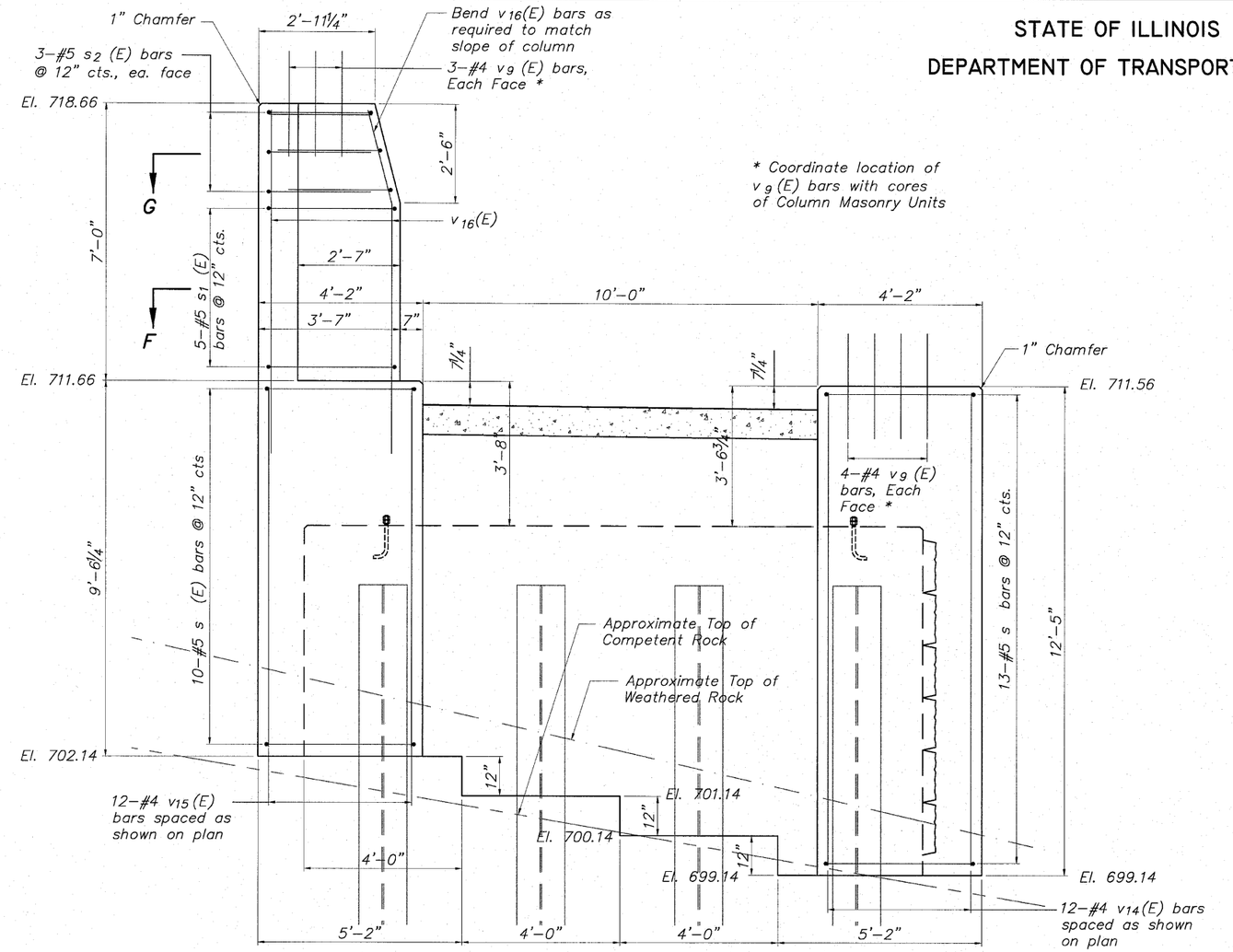

* Coordinate location of v9 (E) bars with cores of Column Masonry Units

ELEVATION (Showing Column Reinforcement)

Looking North

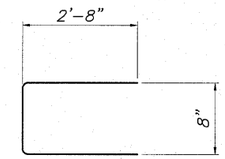

BAR s2(E)

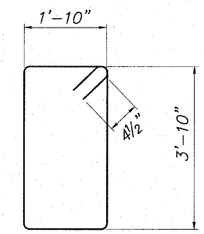

BAR s (E)

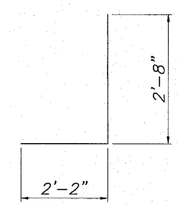

BAR h6(E)

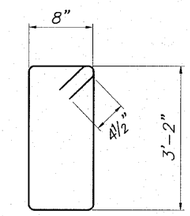

BAR s1(E)

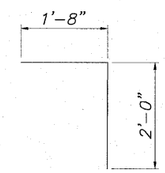

BAR v6(E)

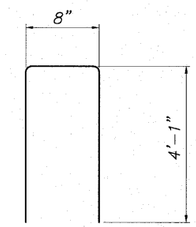

BAR v (E)

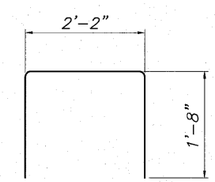

BAR v1(E)

BILL OF MATERIAL

North Abutment For Struct. No. 101-6351

Bar	No.	Size	Length	Shape
h (E)	6	#4	9'-8"	
h1 (E)	12	#4	4'-0"	
h2 (E)	15	#5	15'-4"	
h3 (E)	2	#5	11'-4"	
h4 (E)	4	#5	7'-4"	
h5 (E)	2	#5	3'-4"	
h6 (E)	18	#5	4'-10"	
s (E)	23	#5	11'-7"	
s1 (E)	5	#5	8'-5"	
s2 (E)	6	#5	6'-0"	
v (E)	10	#4	8'-10"	
v1 (E)	12	#4	5'-6"	
v6 (E)	10	#4	3'-8"	
v9 (E)	14	#4	2'-8"	
v10 (E)	8	#5	8'-4"	
v11 (E)	6	#5	7'-4"	
v12 (E)	6	#5	6'-4"	
v13 (E)	8	#5	5'-4"	
v14 (E)	12	#4	12'-0"	
v15 (E)	12	#4	9'-1"	
v16 (E)	8	#4	8'-8"	
Concrete Structures			Cu. Yd.	19.7
Reinforcement Bars (Epoxy Coated)			Pound	1,390
Furnishing Soldier Pile W Section W14x99			Foot	52
Setting Piles in Rock			Each	4
Geocomposite Wall Drain			Sq. Yd.	21.1
Form Liner Textured Surface			Sq. Ft.	108

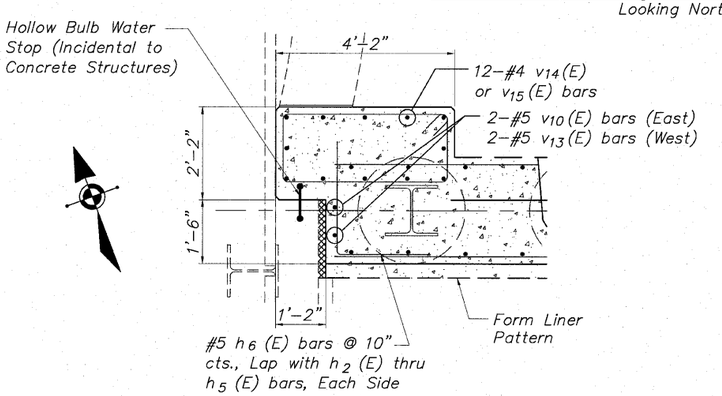

TYPICAL SECTION AT COLUMN

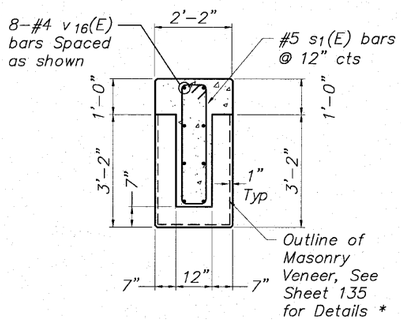

SECTION F-F

Not to Scale

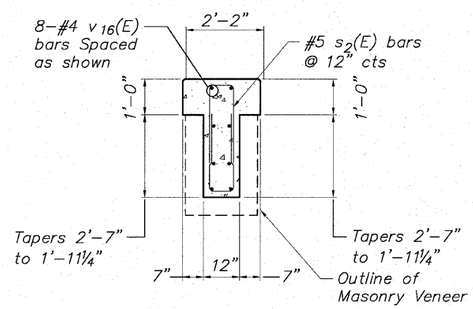

SECTION G-G

Not to Scale

MINIMUM BAR LAP

No. 4 bars 1'-8"

No. 5 bars 2'-2"

NORTH ABUTMENT DETAILS
PEDESTRIAN TRUSS BRIDGE
PEDESTRIAN RIVERWALK ALONG THE ROCK RIVER
WINNEBAGO COUNTY
SECTION NO. 06-00543-00-BT
STATION 210+90.67 TO STATION 211+87.01
STRUCTURE NO. 101-6351

DESIGNED	CTB
CHECKED	AAG
DRAWN	JAW
PEER REVIEWED	

McClure Engineering Associates, Inc.
7282 Argus Drive (815) 398-2332
Rockford, Illinois 61107-5837 Fax (815) 398-2496
Design Firm License: Illinois#184-000816

SHEET NO. 7

8 SHEETS

F.A. RTE.	SECTION	COUNTY	TOTAL SHEETS	SHEET NO.
	06-00543-00-BT	WINNEBAGO	148	73
		CONTRACT NO.		85521
FED. ROAD DIST. NO.	ILLINOIS	FED. AID PROJECT		

STATE OF ILLINOIS

DEPARTMENT OF TRANSPORTATION

GENERAL NOTES:

1. All Structural Steel shall be AASHTO M 270 Grade 50 except as noted.
2. Reinforcement bars shall conform to the requirements of ASTM A706 Grade 60. See Special Provisions.
3. Reinforcement bars designated (E) shall be epoxy coated.
4. All construction joints shall be bonded.
5. No field welding will be permitted.
6. If the design reactions for the individual superstructure units are larger than the reactions shown on the Substructure Layout, the Contractor shall redesign the affected substructure units, or verify the adequacy of the substructure as shown on the plans, submit the Design and Calculations signed and sealed by an Illinois Licensed Structural Engineer for the approval of the Engineer.
7. The Manufacturer shall coordinate with the Lighting Plan. Connections or clips for lighting brackets, conduit, pull boxes, and lighted rail shall be provided by the factory and factory welded.
8. Concrete sealer shall be applied to designated areas of the bearing seat and face of the back of abutment.
9. Bearing Seat surfaces shall be constructed or adjusted to the designated elevations within a tolerance of ⅛" (0.01 ft.). Adjustment shall be made either by grinding or by shimming the bearings.
10. Layout of the slope protection system may be varied to suit ground conditions in the field as directed by the Engineer.
11. When the deck pour is stopped for the day at one or more of the transverse bonded construction joints in the deck pouring sequence as shown, the next pour shall not be made until both of the following are met:
    1. At least 72 hours shall have elapsed from the end of the previous pour.
    2. The concrete strength shall have attained a minimum flexural strength of 650 psi or a minimum compressive strength of 3500 psi.
12. It shall be the responsibility of the Contractor to verify all dimensions and conditions existing in the field prior to construction and ordering materials.
13. Contractor shall be responsible for any dewatering in accordance with the erosion control plan at no additional cost to the contract.
14. Anchor bolts and bearings shall be designed and provided by the manufacturer. Anchor bolt projection shall be specified on the shop drawings. Anchor bolts at fixed bearings may be either cast-in-place or installed in holes after the supported member is in place. Anchor bolts at expansion bearings shall be drilled after the members are in place.
15. Drilled and set anchor bolts shall be installed according to Article 521.06 of the Standard Specifications.
16. The cost of furnishing and installing anchor bolts and bearing assemblies shall be included in the cost of the Pedestrian Truss Superstructure.
17. Reinforcing bars shall be lapped a minimum as shown on plans where splices occur. Radius bars shall be factory bent and delivered to the site with appropriate radius. Field bending will only be allowed to achieve form clearances.
18. Penetrations in the back of abutment for electrical conduit shall be located in the field prior to forming the back of abutment. Coordinate locations with Electrical Plans.
19. Exposed surfaces of concrete shall be given a "rubbed" finish except where form liner is specified. Form liner pattern shall be as specified to match wall facings.
20. Exposed edges shall have a ¾" x 45° chamfer except as shown otherwise. Chamfers on vertical edges shall be continued a minimum of one foot below finished ground level.
21. The approximate embedment depth for the soldier pile tip is as provided on the plans and considers a penetration into competent rock of 5.5 feet (minimum) based on the soil boring information and uniaxial compressive rock strength value of 4,000 psi (minimum) as provided by Terracon Consultants, Inc. The actual top of rock elevation, which qualifies as competent rock meeting the minimum requirements of the design, shall be determined and field verified by the geotechnical engineer during the drilling operation at each soldier pile location. Final pile tip elevations shall be a minimum of 5.5 feet below actual top of competent rock elevations.
22. Backfill behind wall shall be placed to the lines and grades as shown on the plans. The Contractor shall take care to ensure the use of suitable material and proper compaction of all fill areas. Compaction shall be performed with a loose thickness of no more than 8" and each lift shall be compacted to a density equal to or greater than 95% standard proctor maximum dry density (ASTM D-698) taking care not to over compact the soil density behind the wall. Moisture shall be within -2 to +3 percent of optimum. No heavy equipment shall be allowed within 6 feet of the wall during backfilling and compaction. Compaction shall be by hand method, "walk behind", equipment in the areas within 6 feet of the face of the wall.
23. The Superstructure of the Prefabricated Bridge and all elements of the Superstructure above bearing seat elevations, including all truss members, railings, bearings, base plates, grout, anchor bolts (size, location, and embedment), concrete deck, drainage scuppers, and all attachments on the Superstructure shall be designed by the Contractor. Superstructure details as shown in these Plans along with the Special Provision "Pedestrian Truss Superstructure" shall be the basis for preparation of detailed Superstructure Plans.
24. Bearing Seat to Top of Abutment dimensions shall be verified by the Bridge Manufacturer prior to the start of construction.

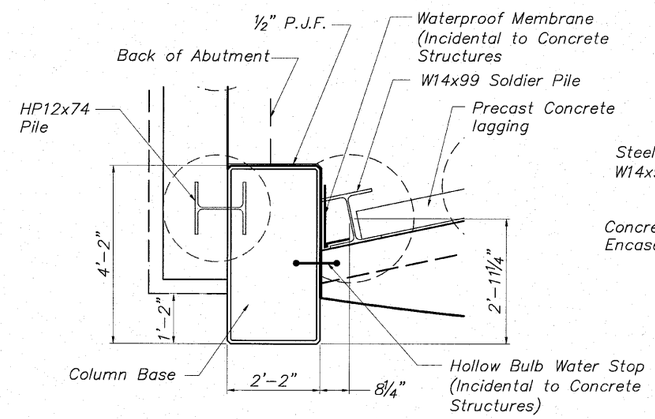

EAST END NORTH ABUTMENT

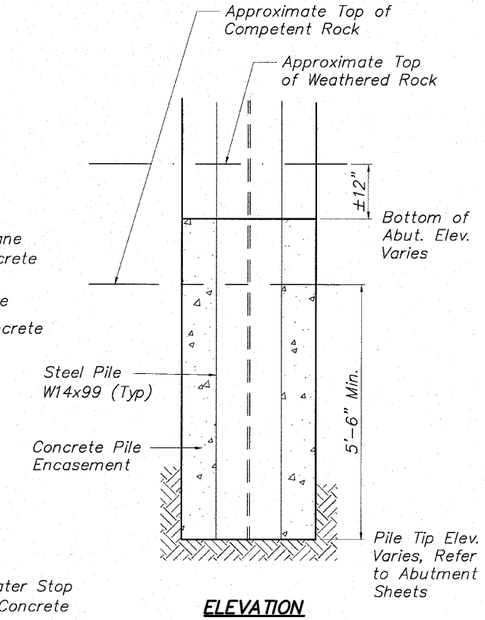

ELEVATION

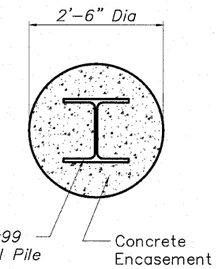

PLAN

PILE ENCASEMENT SECTION

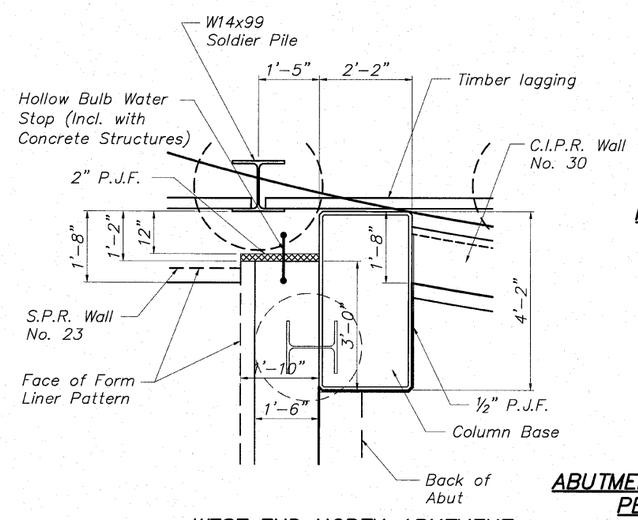

WEST END NORTH ABUTMENT

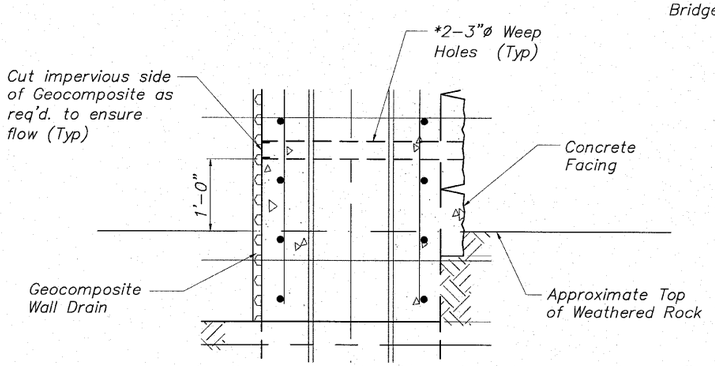

WEEP HOLE DETAIL

* Included in the cost for Concrete Structures

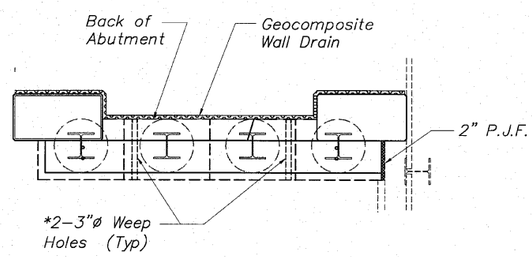

WALL DRAIN DETAIL

NOTE:
Location of Weep Holes as shown on Plan View or as Directed by the Engineer based on field conditions

ABUTMENT DETAILS & GENERAL NOTES
PEDESTRIAN TRUSS BRIDGE
PEDESTRIAN RIVERWALK
ALONG THE ROCK RIVER
WINNEBAGO COUNTY
SECTION NO. 06-00543-00-BT
STATION 210+90.67 TO
STATION 211+87.01
STRUCTURE NO. 101-6351

DESIGNED	
CHECKED	
DRAWN	JAW
PEER REVIEWED	

McClure Engineering Associates, Inc.
7282 Argus Drive (815) 398-2332
Rockford, Illinois 61107-5837 Fax (815) 398-2496
Design Firm License: Illinois#184-000816

SHEET NO. 8
8 SHEETS

F.A. RTE.	SECTION	COUNTY	TOTAL SHEETS	SHEET NO.
	06-00543-00-BT	WINNEBAGO	148	74
		CONTRACT NO.		85521
FED. ROAD DIST. NO.	ILLINOIS	FED. AID PROJECT		

STATE OF ILLINOIS

DEPARTMENT OF TRANSPORTATION

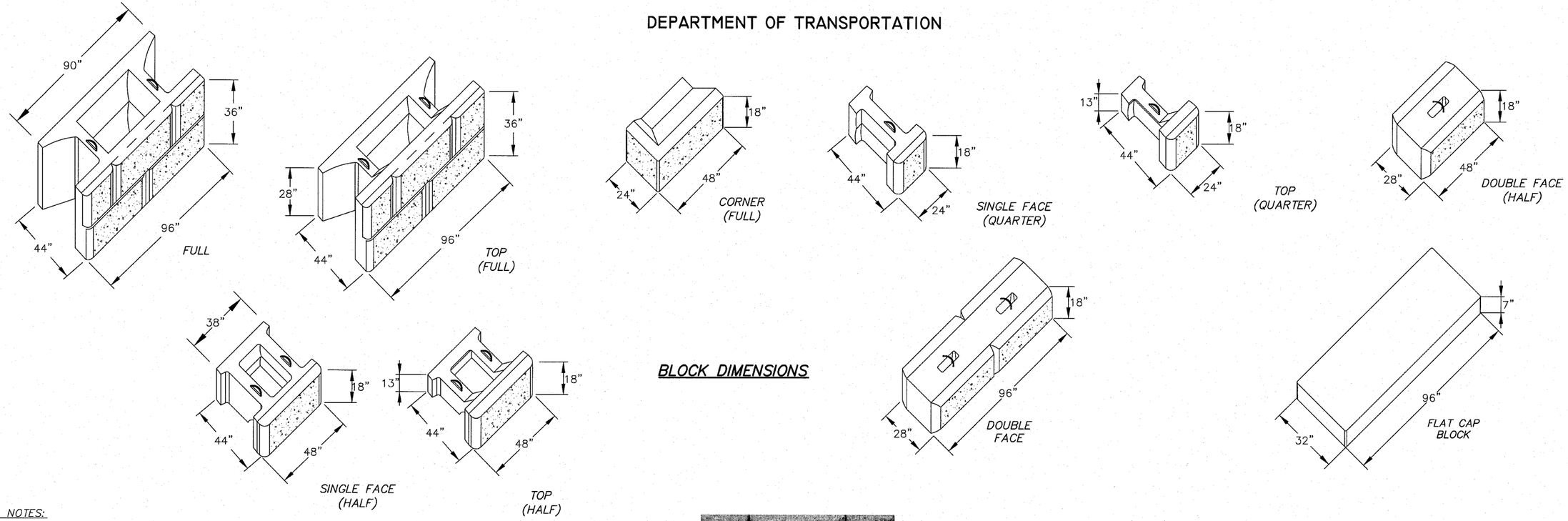

BLOCK DIMENSIONS

GENERAL NOTES:

1. The Contractor shall supply shop drawings for the proposed wall. The design shown is for Stone Strong ® Wall System. Tie-backs or mass extenders may be required. If the contractor elects to provide a different wall system, he shall supply shop drawings signed and sealed by an Illinois Licensed Structural Engineer with required stability calculations. Any proposed wall system shall conform to the general appearance and stability of that shown.

2. Mass extenders or tie-back system shall be calculated using a minimum factor of safety of 2.0 for overturning and Bearing and 1.5 for sliding.

3. The contractor shall coordinate the Precast Modular Block Wall (M.R.W.) with Form Liner-Textured Surface to ensure that they match. A sample will be required before ordering material.

4. Leveling base may be concrete or coarse aggregate based on manufactures recommendations and shop drawings. Place compacted base material on undisturbed inorganic soil in accordance with manufactures recommendations, 9" minimum thickness. The cost of leveling base, cutoff trench, unit fill of blocks, and any required mass extenders or tie-backs shall be incidental to the square foot price of the M.R.W.

5. Granular Embankment for unit fill will not be measured for payment but shall be included in the square foot price for the Modular Retaining Wall System.

6. The Contractor shall begin construction of Wall No.1 and Wall No.2 at the North ends and progress South. If cutting is necessary to achieve a snug fit, it shall be done at Overlook No.1 for M.R.W.S. No. 1 and the Joint with C.I.P. Wall 30 for M.R.W.S. 4.

7. A Cap Block shall be securely fastened to the Double-face Block on the top of M.R.W.S. No.1 with an approved epoxy. Double-face Blocks that step down shall have a third face on the revealed end. If cutting of Cap Block is necessary to lay on a radius, the cutting shall be incidental to the Block.

8. Step downs in Walls No. 2, 3 and 4 shall have corner blocks for the exposed faces.

9. The retaining walls shall be installed in accordance with the Manufacturer's written specifications and details.

10. Granular Embankment (Special) shall be placed in accordance with Section 207 of the Standard Specifications for Road and Bridge Construction.

11. The Contractor shall excavate to the lines shown on the plans being careful not to disturb embankment materials beyond the limits needed for wall excavation. Excavation and Granular Backfill beyond the Pay Limits shown on the plans is the responsibility of the Contractor and will not be included for payment. The Contractor is responsible for determining the means and methods for excavating and necessary shoring required to maintain excavation and protect workers, adjacent property, and utilities.

12. All disturbed areas which are not paved shall be graded and treated in accordance with the restoration and Landscaping Plan.

13. Minimum soil bearing pressure shall be 2000 p.s.f. and shall be field verified before setting modular blocks.

14. Portions of M.R.W. No. 1 are located within the proposed haul road for the Contractor. The Contractor shall be advised that the backfilling of S.P.R. Wall 20 is required before casting the C.I.P. face. The Contractor shall consider the completion of a portion of M.R.W. No. 1 from Station 207+04.7 to Station 208+05 relative to this backfilling requirement. See notes for S.P.R. Wall 20 on Sheet 78.

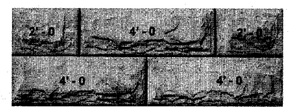

BLOCK PATTERN

INDEX

BORING NUMBER	STATION	OFFSET	GROUND ELEV.	WEATHERED ROCK	AUGER REFUSAL
B-1	205+62	20.1' LT	728		
B-2	206+69	44.3' LT	728		
B-3	207+60	36.1' LT	728	710	701.5
B-4	208+20	43.1' RT	695	693.5	692.7
B-5	209+64	59.9' RT	693	691	691
B-6	210+83	40.15' RT	696	693	693
B-7	212+10	37.74' RT	696	694.5	694.5
B-8	213+71	34.17' RT	698	695	691.5
B-9	211+98	31.8' LT	716	710	706
B-10	211+67	77.9' LT	720	712	710
B-11	212+57	61.6' LT	721	710	705
B-12	211+12	200.5' LT	736	714	714
B-13	212+13	155.2' LT	730	709	709
B-14	209+57	39.5' LT	730	711	705
B-15	208+63	54.3' LT	730	712	700

BILL OF MATERIAL

ITEM	UNITS	TOTAL QUANTITY	MRW 1	MRW 2	MRW 3	MRW 4
MODULAR BLOCK WALL UNITS *	Sq. Ft.	6,326	2,713	858	2,004	751
GRANULAR EMBANKMENT, SP.	Cu. Yd.	465	180	60	180	45
4" PERFORATED DRAIN TILE	Foot	603	218	134	182	69

M.R.W.S. = PRECAST MODULAR BLOCK WALL

* Quanity includes payment for all faces. Corner Block will include measurement for payment of both faces. Cap Block will be measured along one edge only for payment.

ALI A. GHARAMTI
081-005060
LICENSED
STRUCTURAL
ENGINEER
OF
MOLINE
STATE OF ILLINOIS

Signature

9/7/10

Date

DESIGNED	CTB
CHECKED	AAG
DRAWN	JAW
CHECKED	JWH

McClure Engineering Associates, Inc.

7282 Argus Drive (815) 398-2332 Rockford, Illinois 61107-5837 Fax (815) 398-2496

Design Firm License: Illinois#184-000816

SHEET NO. 1

5 SHEETS

PRECAST MODULAR BLOCK WALLS

F.A. RTE.	SECTION	COUNTY	TOTAL SHEETS	SHEET NO.
	06-00543-00-BT	WINNEBAGO	148	75
		CONTRACT NO.		85521
FED. ROAD DIST. NO.	ILLINOIS	FED. AID PROJECT		

STATE OF ILLINOIS
DEPARTMENT OF TRANSPORTATION

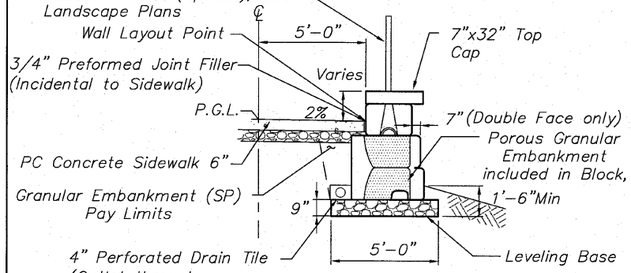

DETAIL 1
Sta. 205+86.7 to Sta. 205+94.7

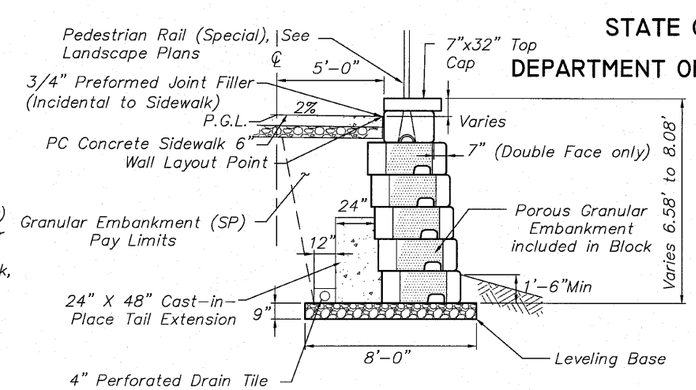

DETAIL 2
Sta. 205+94.7 to Sta. 206+06.7

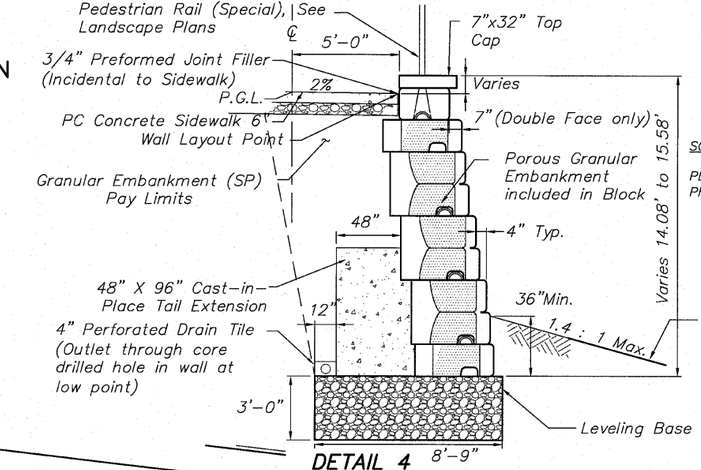

DETAIL 4
Sta. 206+32.7 to Sta. 206+56.7

SCALES:
PLAN: 1"= 10'
PROFILE: 1" = 10' HORIZONTAL
1" = 10' VERTICAL
0 10 20
Scale in Feet

Perform minor grading as required to meet Max. slope

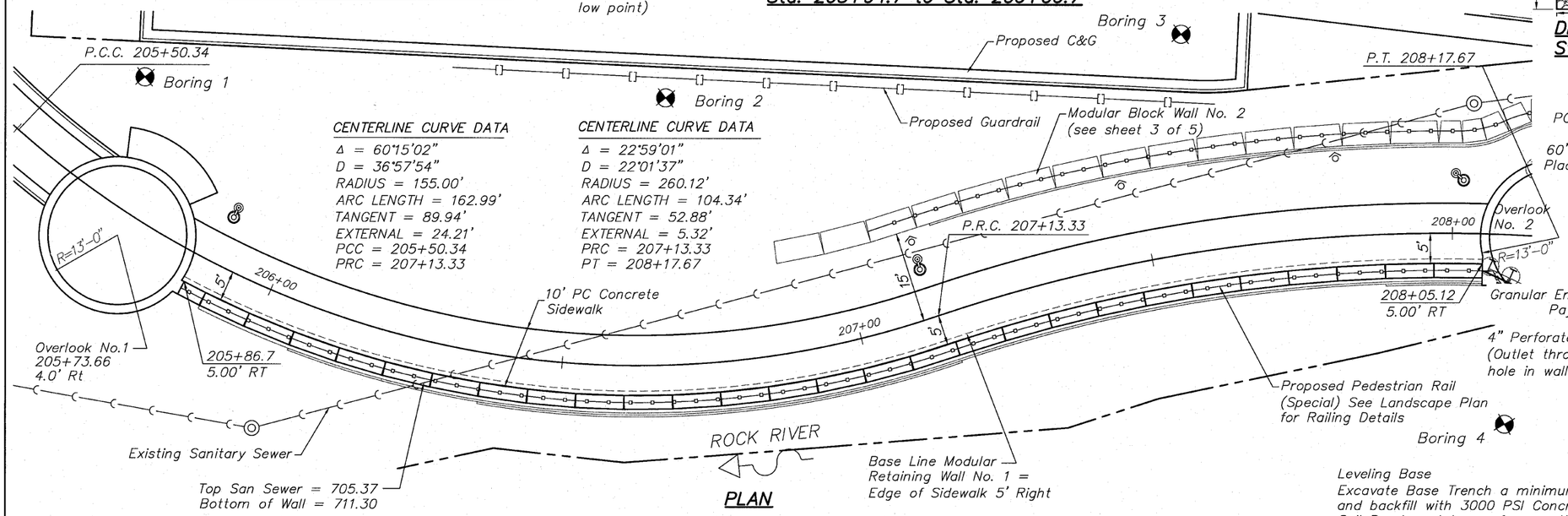

PLAN

Leveling Base
Excavate Base Trench a minimum of 4' deep and backfill with 3000 PSI Concrete. Minimum Soil Bearing at base of excavation to be 2000 PSF. Field Verify.

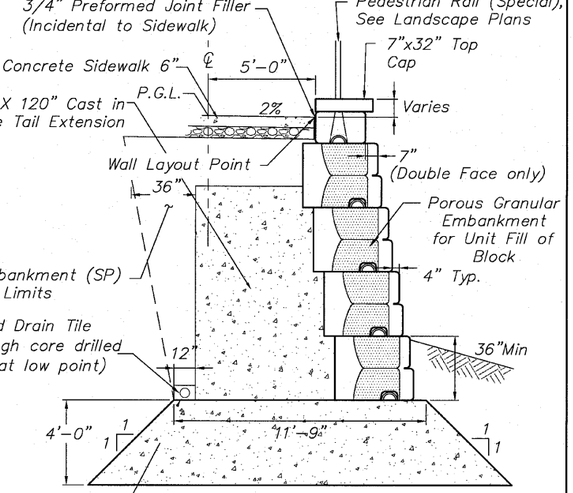

DETAIL 5
Sta. 206+56.7 to Sta. 207+04.7
Sta. 207+88.7 to Sta 208+05

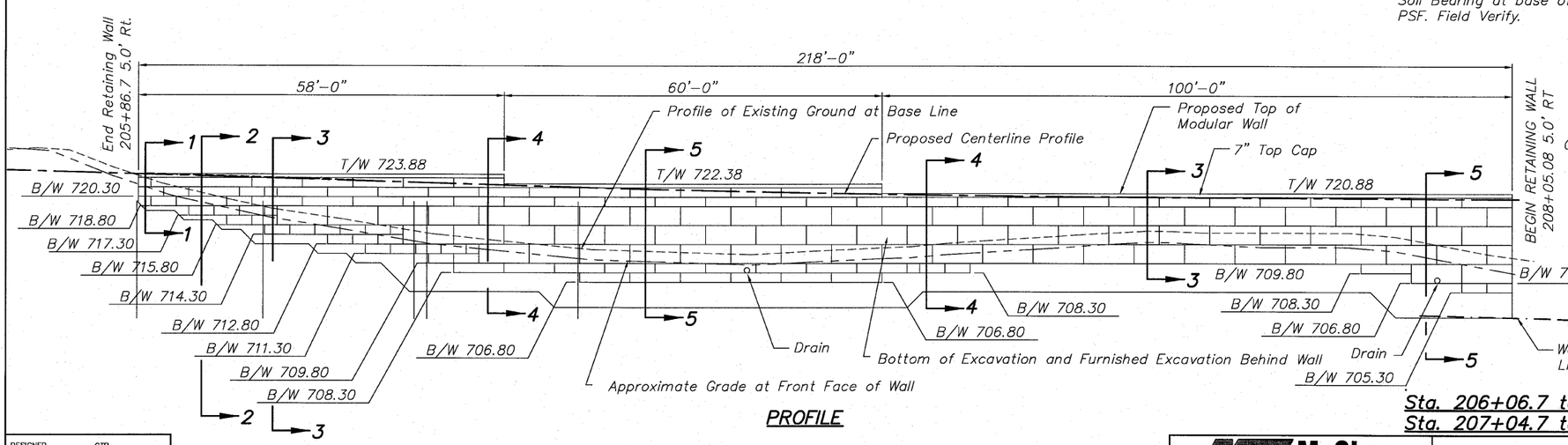

PROFILE

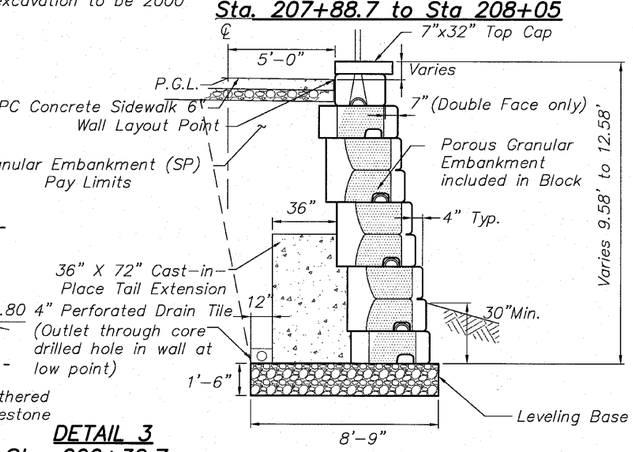

DETAIL 3
Sta. 206+06.7 to Sta. 206+32.7
Sta. 207+04.7 to Sta. 207+88.7

SEE CONSTRUCTION SEQUENCE NOTE 14 ON SHEET 73

PRECAST MODULAR BLOCK WALL NO. 1

DESIGNED	CTB
CHECKED	AAG
DRAWN	JAW
CHECKED	JWH

McClure Engineering Associates, Inc.
7282 Argus Drive, Rockford, Illinois 61107-5837
(815) 398-2332 Fax (815) 398-2496
Design Firm License: Illinois#184-000816

SHEET NO. 2
5 SHEETS

F.A. RTE.	SECTION	COUNTY	TOTAL SHEETS	SHEET NO.
	06-00543-00-BT	WINNEBAGO	148	76
		CONTRACT NO.		85521
FED. ROAD DIST. NO.	ILLINOIS	FED. AID PROJECT		

STATE OF ILLINOIS
DEPARTMENT OF TRANSPORTATION

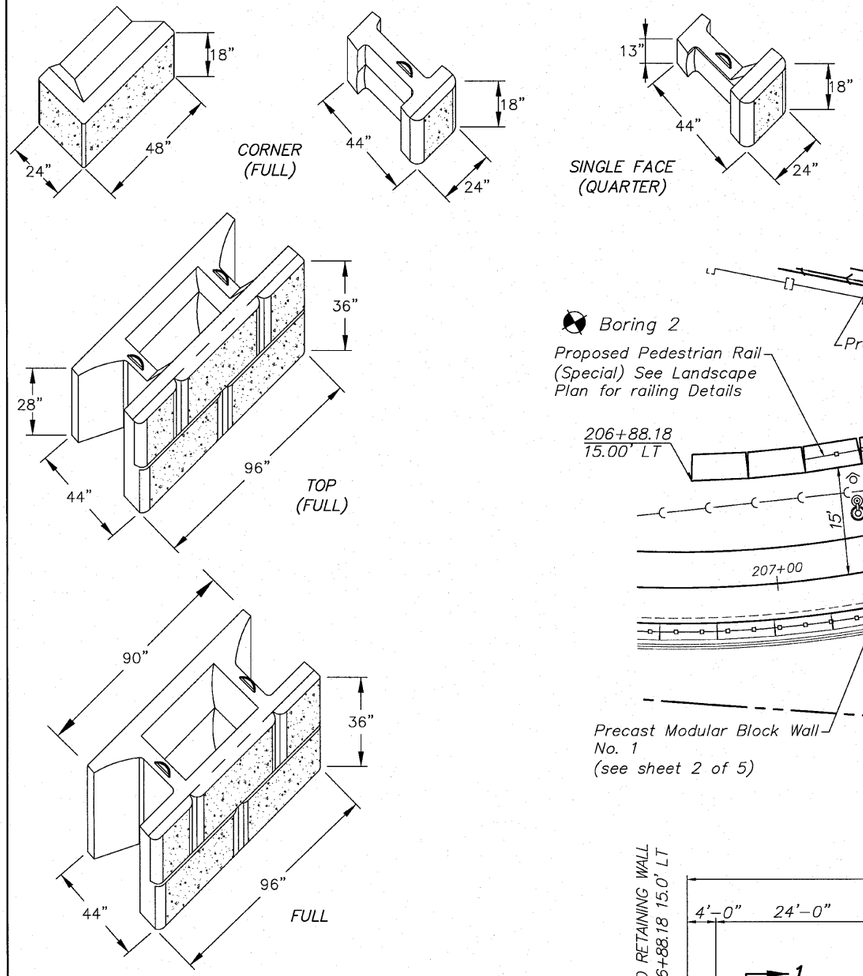

CENTERLINE CURVE DATA

Δ = 22°59'01"
D = 22°01'37"
RADIUS = 260.12'
ARC LENGTH = 104.34'
TANGENT = 52.88'
EXTERNAL = 5.32'
PRC = 207+13.33
PT = 208+17.67

SCALES:

PLAN: 1" = 10'

PROFILE: 1" = 10' HORIZONTAL
1" = 10' VERTICAL

0 10 20
Scale in Feet

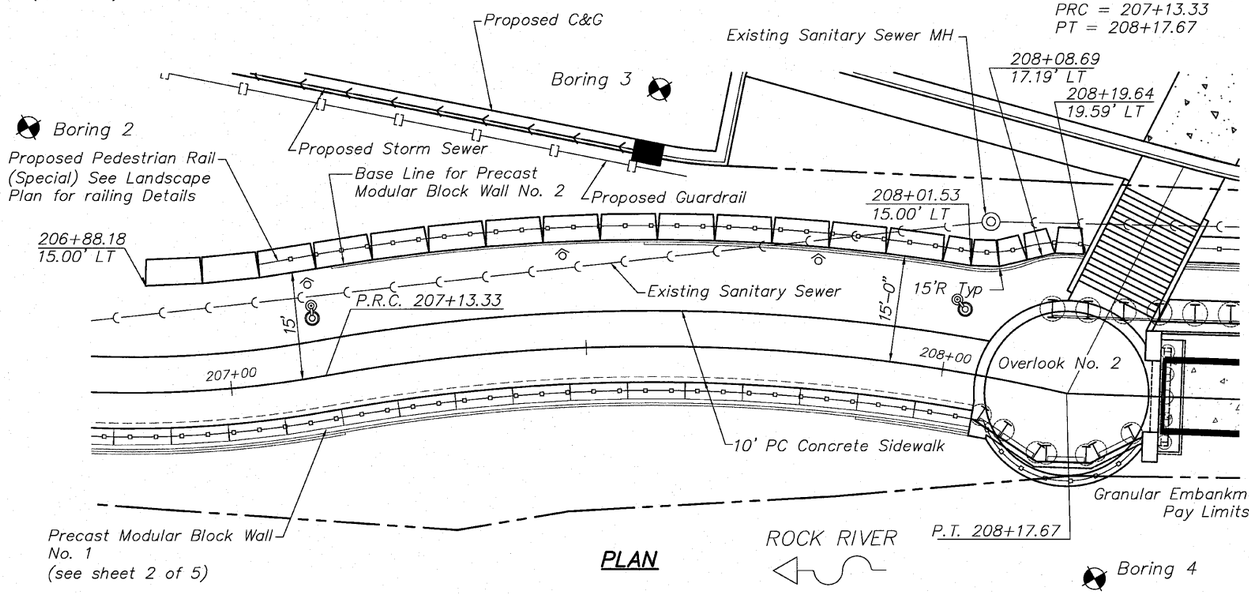

PLAN

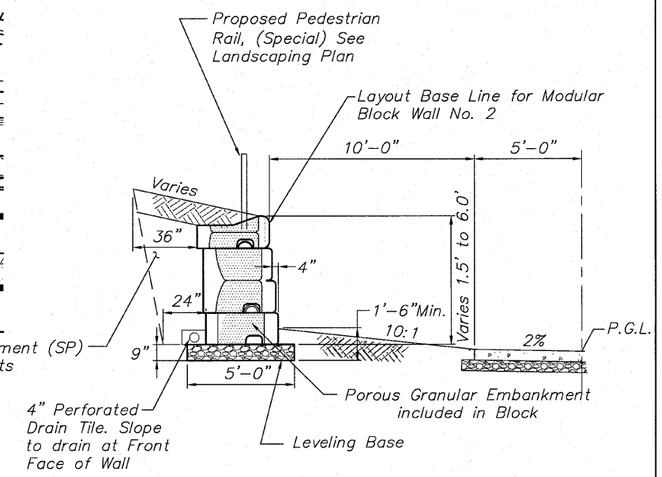

DETAIL 1
Sta. 206+88 to Sta. 207+32

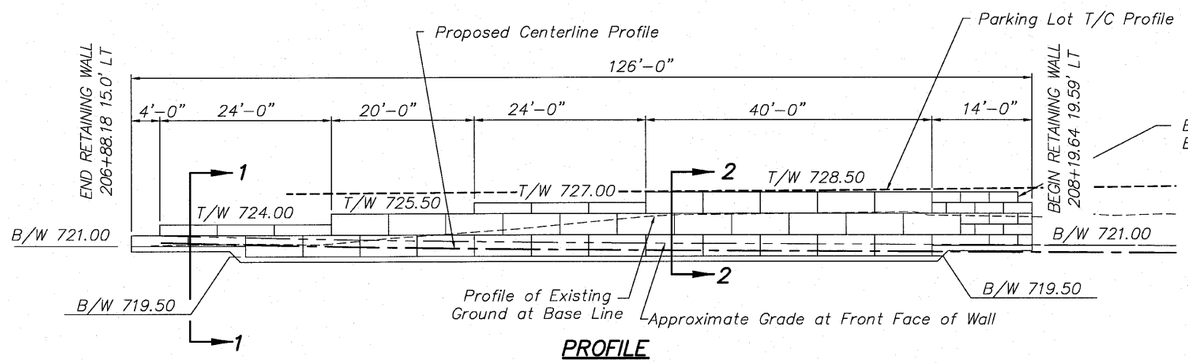

PROFILE

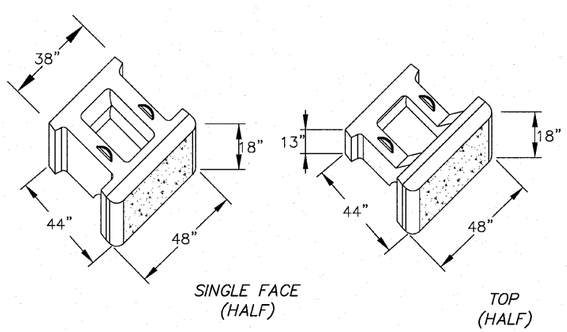

BLOCK DIMENSIONS

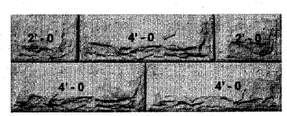

BLOCK PATTERN

SEE GENERAL NOTES, SHEET 1 OF 5

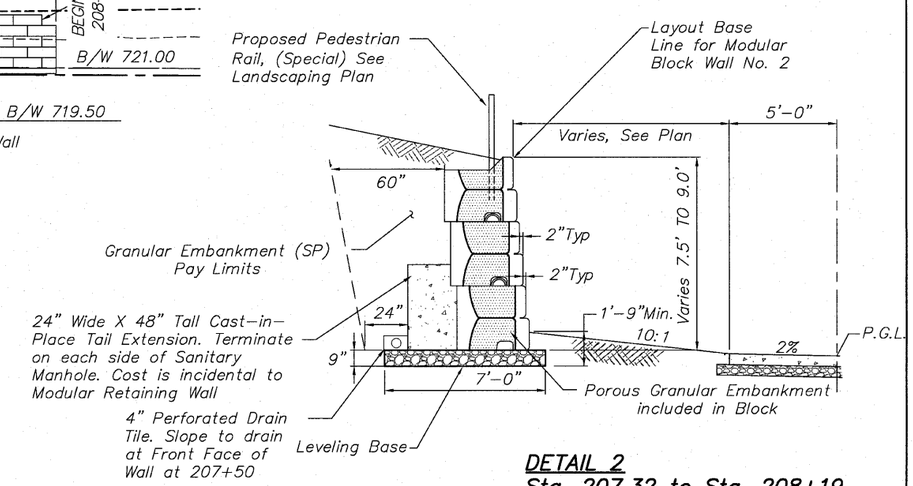

DETAIL 2
Sta. 207.32 to Sta. 208+19

PRECAST MODULAR BLOCK WALL NO. 2

DESIGNED	CTB
CHECKED	AAG
DRAWN	JAW
CHECKED	JWH

McClure Engineering Associates, Inc.
7282 Argus Drive (815) 398-2332 Rockford, Illinois 61107-5837 Fax (815) 398-2496
Design Firm License: Illinois#184-000816

SHEET NO. 3
5 SHEETS

F.A. RTE.	SECTION	COUNTY	TOTAL SHEETS	SHEET NO.
	06-00543-00-BT	WINNEBAGO	148	77
		CONTRACT NO.	85521	
FED. ROAD DIST. NO.	ILLINOIS	FED. AID PROJECT		

STATE OF ILLINOIS

DEPARTMENT OF TRANSPORTATION

SCALES:

PLAN: 1"= 10'

PROFILE: 1" = 10' HORIZONTAL
1" = 10' VERTICAL

0 10 20
Scale in Feet

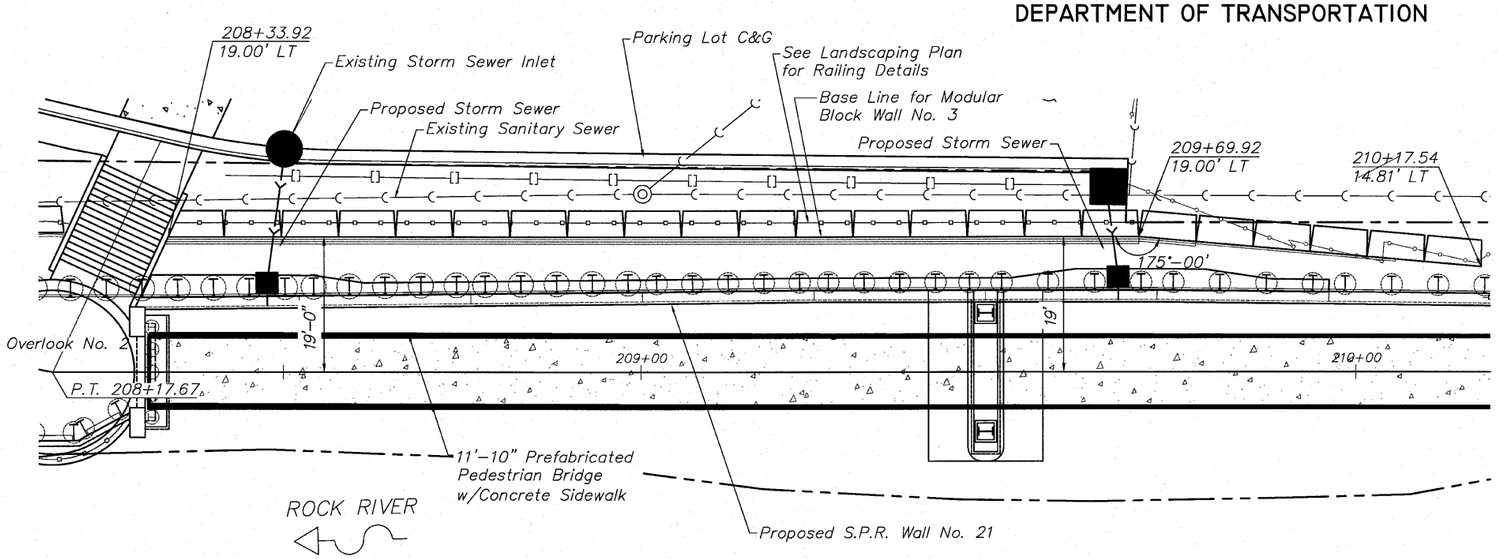

PLAN

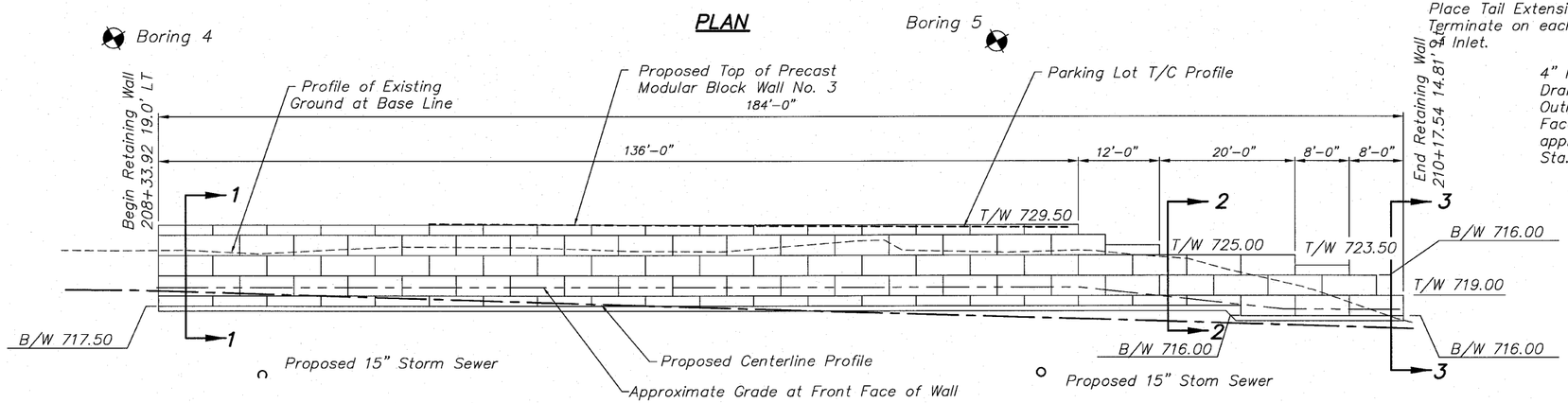

PROFILE

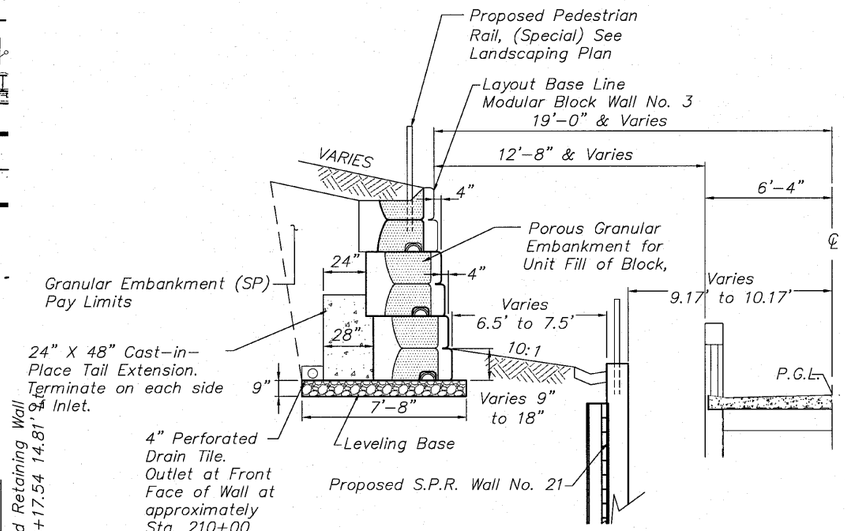

DETAIL 2
Sta. 209+69.92 to Sta. 210+09.92

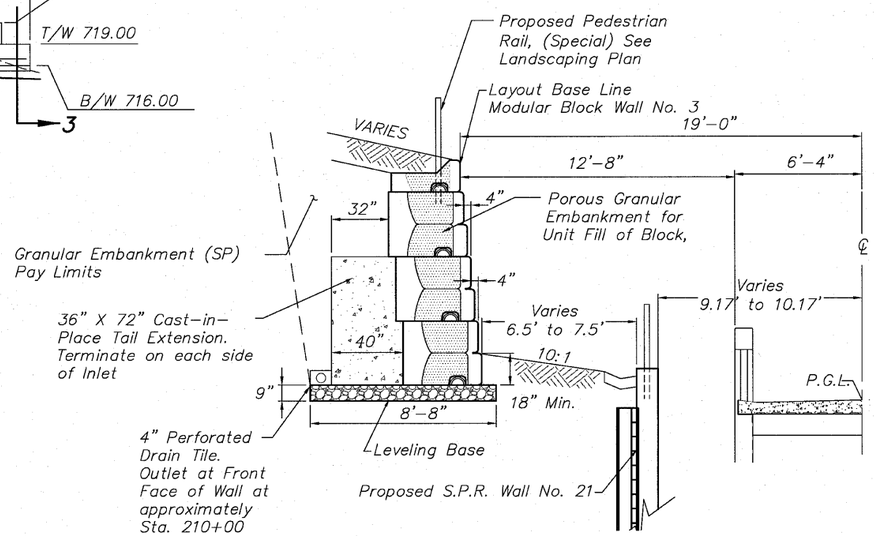

DETAIL 1
Sta. 208+33.92 to Sta. 209+69.92

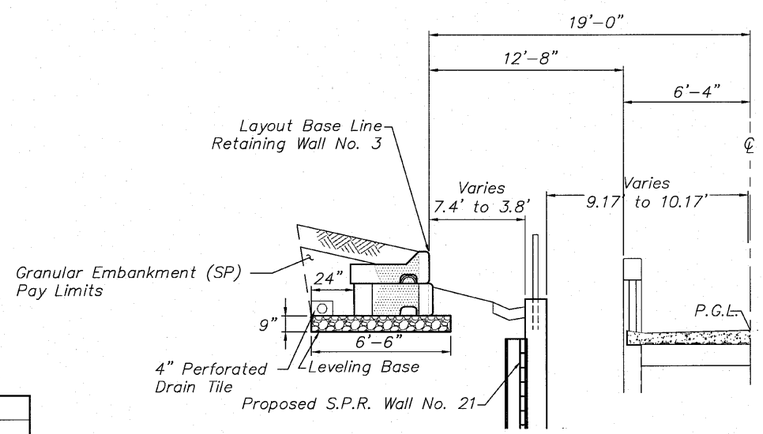

DETAIL 3
Sta. 210+69.92 to Sta. 210+17.54

PRECAST MODULAR BLOCK WALL NO. 3

DESIGNED	CTB
CHECKED	AAG
DRAWN	JAW
CHECKED	JWH

McClure Engineering Associates, Inc.
7282 Argus Drive
(815) 398-2332
Rockford, Illinois 61107-5837
Fax (815) 398-2496
Design Firm License: Illinois#184-000816

SHEET NO. 4

5 SHEETS

F.A. RTE.	SECTION	COUNTY	TOTAL SHEETS	SHEET NO.
	06-00543-00-BT	WINNEBAGO	148	78
		CONTRACT NO.		85521
FED. ROAD DIST. NO.	ILLINOIS	FED. AID PROJECT		

STATE OF ILLINOIS
DEPARTMENT OF TRANSPORTATION

SCALES:
PLAN: 1" = 10'
PROFILE: 1" = 10' HORIZONTAL
1" = 10' VERTICAL

0 10 20
Scale in Feet

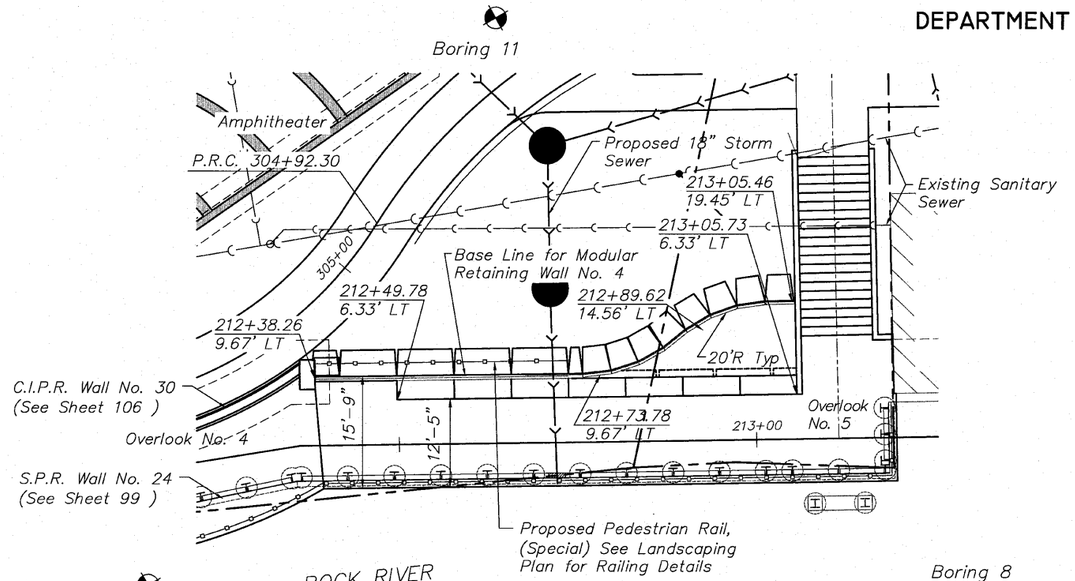

PLAN

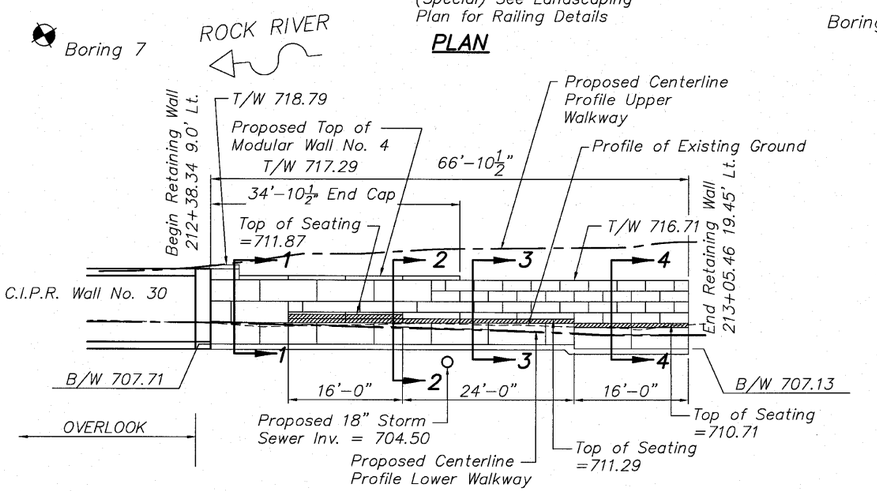

PROFILE

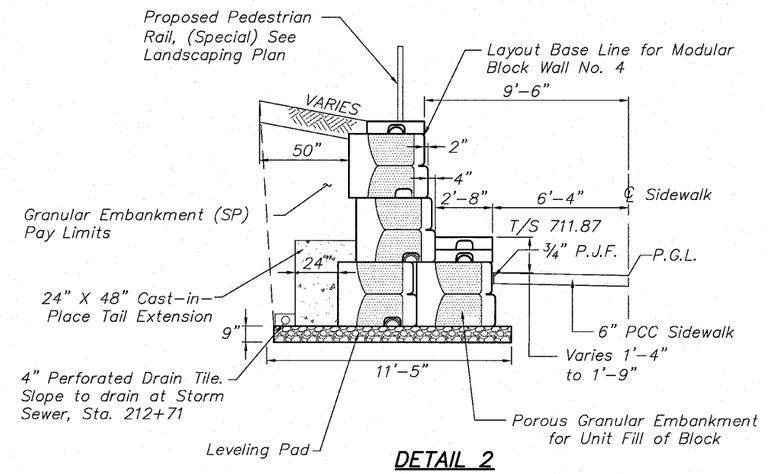

DETAIL 2
Sta. 212+49.78 to Sta. 212+65.78

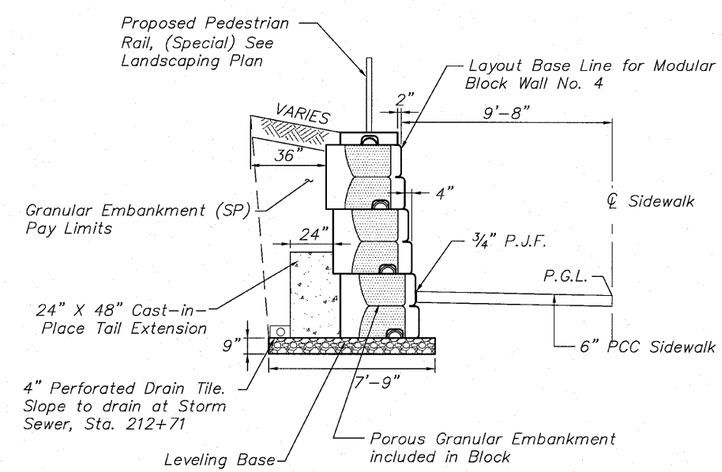

DETAIL 1
Sta. 212+38.34 to Sta. 212+49.78

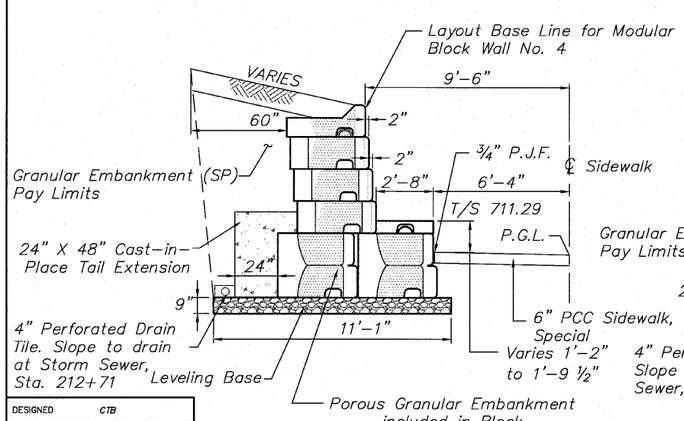

DETAIL 3
Sta. 212+65.78 to Sta. 212+89.78

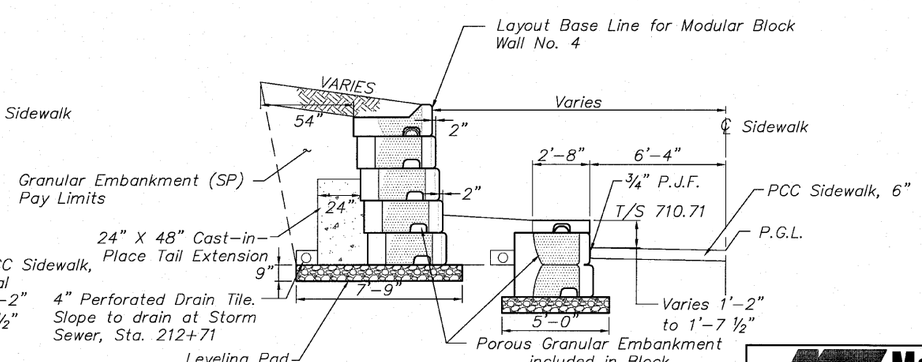

DETAIL 4
Sta. 212+89.78 to 213+05.46

PRECAST MODULAR BLOCK WALL NO. 4

DESIGNED	CTB
CHECKED	AAG
DRAWN	JAW
CHECKED	JWH

McClure Engineering Associates, Inc.
7282 Argus Drive
(815) 398-2332
Rockford, Illinois 61107-5837
Fax (815) 398-2496
Design Firm License: Illinois#184-000816

SHEET NO. 5
5 SHEETS

F.A. RTE.	SECTION	COUNTY	TOTAL SHEETS	SHEET NO.
	06-00543-00-BT	WINNEBAGO	148	79
		CONTRACT NO.		85521
FED. ROAD DIST. NO.	ILLINOIS	FED. AID PROJECT		

BENCHMARK		
NO.	DESCRIPTION	ELEVATION
	North Bonnet Bolt on Fire Hydrant South Of Museum Entrance on the East side of N. Main Street	736.60

EXISTING STRUCTURE: None

Notes: Wall Offsets are Measured from the ℄ of the Pedestrian Walkway to the Back Face of the Cast-In-Place Portion of the Soldier Pile Wall unless shown otherwise.

S.P.R.W. = Soldier Pile Retaining Wall
C.I.P. = Cast-in-Place

STATE OF ILLINOIS
DEPARTMENT OF TRANSPORTATION

HIGHWAY CLASSIFICATION
Rockford Pedestrian Riverwalk
Functional Class: Pedestrian

DESIGN SPECIFICATIONS
2002 AASHTO
Standard Specifications – 17th Edition

DESIGN STRESSES
Field Units
f'c = 3,500 psi (Cast-In Place Concrete)
fy = 60,000 psi (Reinforcement)
fy = 50,000 psi (Soldier Pile Steel)

Precast Units
f'c = 5,000 psi (Precast Concrete)
fy = 60,000 psi (Reinforcement)

TOTAL BILL OF MATERIALS

SP WALL No. 20 AND LOOKOUT No. 2 SLAB

ITEM	UNITS	TOTAL
Structure Excavation	Cu. Yd.	10
Concrete Structures	Cu. Yd	31.1
Protective Coat	Sq. Yd.	49.8
Stud Shear Connectors	Each	210
Precast Concrete Lagging	Sq. Ft.	340
Furnishing Soldier Piles (W Section)	Foot	194
Drilling and Setting Soldier Piles in Rock	Cu. Ft.	435
Drilling and Setting Soldier Piles in Soil	Cu. Ft.	396
Reinforcement Bars (Epoxy Coated)	Pound	4,303
Geocomposite Wall Drain	Sq. Yd.	17.5
Form Liner Textured Surface	Sq. Ft.	410
Rock Excavation for Structures, Special	Cu. Yd.	1.2
Rubbed Finish	Sq. Ft.	86
Anti-Grafitti Coating	Sq. Ft.	496
Staining Concrete Structures	Sq. Yd.	46

SCALES:
PLAN: 1"= 10'
PROFILE: 1" = 10' HORIZONTAL
1" = 10' VERTICAL
0 10 20
Scale in Feet

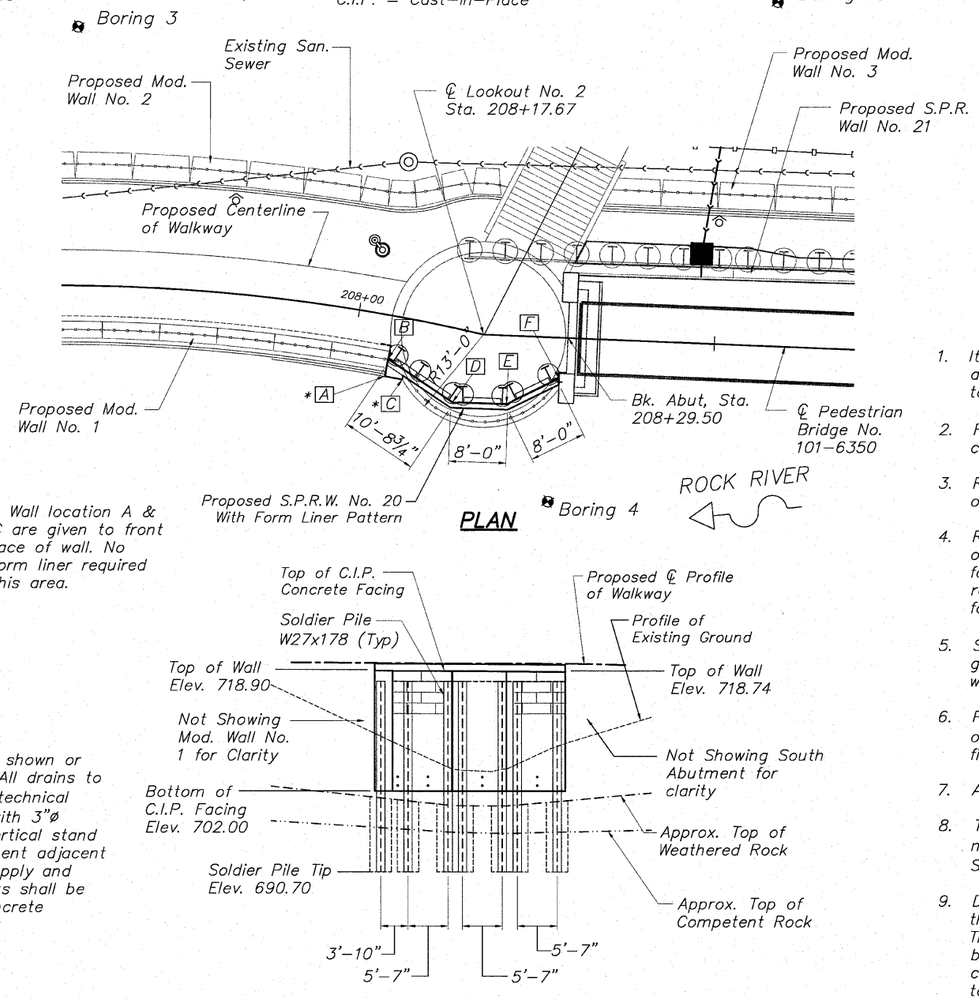

PLAN

ELEVATION

CENTERLINE CURVE DATA

Δ = 22°59'01"
D = 22°01'37"
RADIUS = 260.12'
ARC LENGTH = 104.34'
TANGENT = 52.88'
EXTERNAL = 5.32'
PCC = 207+13.33
PT = 208+17.67

* Wall location A & C are given to front face of wall. No form liner required this area.

DRAINAGE SYSTEM NOTE:

* 3"Ø drains to be placed as shown or as directed by the Engineer. All drains to be covered by a 18"x18" Geotechnical Filter Fabric and connected with 3"Ø Drain Pipe and directed to vertical stand pipe in back of Bridge Abutment adjacent to Weep Hole. The cost to supply and install all drainage components shall be included with the cost of Concrete Structures.

* Wall location A & C are given to front face of wall. No form liner required this area.

GENERAL NOTES

1. It shall be the responsibility of the Contractor to verify all dimensions and conditions existing in the field prior to construction and ordering materials.
2. Reinforcement bars designated (E) shall be epoxy coated.
3. Reinforcement bars shall conform to the requirements of ASTM A706 Gr 60. See Special Provisions.
4. Reinforcing bars shall be lapped a minimum as shown on plans where splices occur. Radius bars shall be factory bent and delivered to the site with appropriate radius. Field bending will only be allowed to achieve form clearances.
5. Stud shear connectors shall be ¾" diameter x 4" granular or flux filled headed studs automatically end welded to the front flange in the field.
6. Protective coat shall be applied to all exposed surfaces of the wall and shall extend 1'-0" minimum below finished grade.
7. All construction joints shall be bonded.
8. The cost of cutting off any piling in excess of that needed shall be included in the cost of "Drilling and Setting Soldier Piles".
9. Drilling and Setting of Soldier Piles will require drilling through layers of sand and gravel. Refer to boring logs. The use of temporary drill casings or drilling slurry may be required to keep holes open prior to placement of concrete at no additional cost to the contract. Refer to Special Provisions for Drilling and Setting Soldier Piles.
10. The approximate embedment depth for the soldier pile tip is as provided on the plans and considers a penetration into competent rock of 5.5 feet (minimum) based on the soil boring information and uniaxial compressive rock strength value of 4,000 PSI (minimum) as provided by Terracon Consultants, Inc. The actual top of rock elevation, which qualifies as competent rock meeting the minimum requirements of the design, shall be determined and field verified by the Geotechnical Engineer during the drilling operation at each soldier pile location. Final pile tip elevations shall be a minimum of 5.5 feet below actual top of competent rock elevations.
11. All exposed edges shall have a ¾" x 45° chamfer, except as shown otherwise. Chamfers on vertical edges shall be continued a minimum of one foot below finished ground level.
12. Exposed surfaces of concrete shall be given a "rubbed finish" except where form liner is specified.
13. Contractor shall be responsible for dewatering in accordance with the erosion control plan at no additional cost to the contract.
14. Backfill behind wall shall be placed to the lines and grades as shown on the plans. The Contractor shall take care to ensure the use of suitable material and proper compaction of all fill areas. Compaction shall be performed with a loose thickness of no more than 8" and each lift shall be compacted to a density equal to or greater than 95% standard proctor maximum dry density (ASTM D-698) taking care not to over compact the soil directly behind the wall. Moisture shall be within -2 to +3 percent of optimum. No heavy equipment shall be allowed within 6 feet of the wall during backfilling and compaction. Compaction shall be by hand method, "walk behind", equipment in the areas within 6 feet of the face of the wall.
15. Backfill of wall behind precast panels must be completed before placement of cast-in-place concrete face. Refer to Precast Panel Details Sheet for additional notes.
16. Temporary Concrete will be removed in the future by "others". Install a bond breaker to allow removal without damaging the structural slab. Temporary Concrete will be paid as PCC Sidewalk, 6" and shall include payment for the bond breaker.

INDEX OF WALL No. 20 SHEETS

WALL INFORMATION CHART

Reference Point	Station to Back Face of C.I.P. Wall	Offset to Back Face of C.I.P. Wall
A	*208+05.12	*8.56' Rt.
B	208+05.12	6.11' Rt.
C	*208+07.71	*8.54' Rt.
D	208+15.47	10.23' Rt.
E	208+21.27	9.62' Rt.
F	208+28.50	5.72' Rt.

MINIMUM BAR LAP

No. 4 bars 1'-8"
No. 5 bars 2'-2"
No. 6 bars 2'-7"

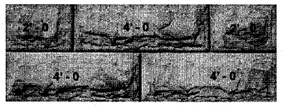

FORM LINER PATTERN

Milestone, Inc.
Pattern No. MS-1011
Weathered Limestone or Equal
(See Special Provisions)

Reviewed and Approved for Structural Adequacy Only

Todd C. Ude 9/1/2010

LICENSED STRUCTURAL ENGINEER TODD C. UDE 081-005764 Exp. 11/30/2010 STATE OF ILLINOIS

ALI A. GHARAMATI 081-005060 LICENSED STRUCTURAL ENGINEER OF MOLINE STATE OF ILLINOIS

Signature

Date 8/31/10

GENERAL PLAN & ELEVATION
SP WALL No. 20
PEDESTRIAN RIVERWALK
ALONG THE ROCK RIVER
WINNEBAGO COUNTY
SECTION NO. 06-00543-00-BT
STATION 208+05.12 TO STATION 208+28.50

DESIGNED	CTB
CHECKED	AAG
DRAWN	JAW
CHECKED	JWH

EXAMINED — 20
ENGINEER OF BRIDGE DESIGN
PASSED
ENGINEER OF BRIDGES AND STRUCTURES

McClure Engineering Associates, Inc.
7282 Argus Drive Rockford, Illinois 61107-5837
(815) 398-2332 Fax (815) 398-2496
Design Firm License: Illinois#184-000816

SHEET NO. 1
5 SHEETS

F.A. RTE.	SECTION	COUNTY	TOTAL SHEETS	SHEET NO.
	06-00543-00-BT	WINNEBAGO	148	80
		CONTRACT NO.		85521
FED. ROAD DIST. NO.	ILLINOIS	FED. AID PROJECT		

STATE OF ILLINOIS
DEPARTMENT OF TRANSPORTATION

SCALES:
PLAN: 1"= 5'
PROFILE: 1" = 5' HORIZONTAL
1" = 5' VERTICAL

0 5 10
Scale in Feet

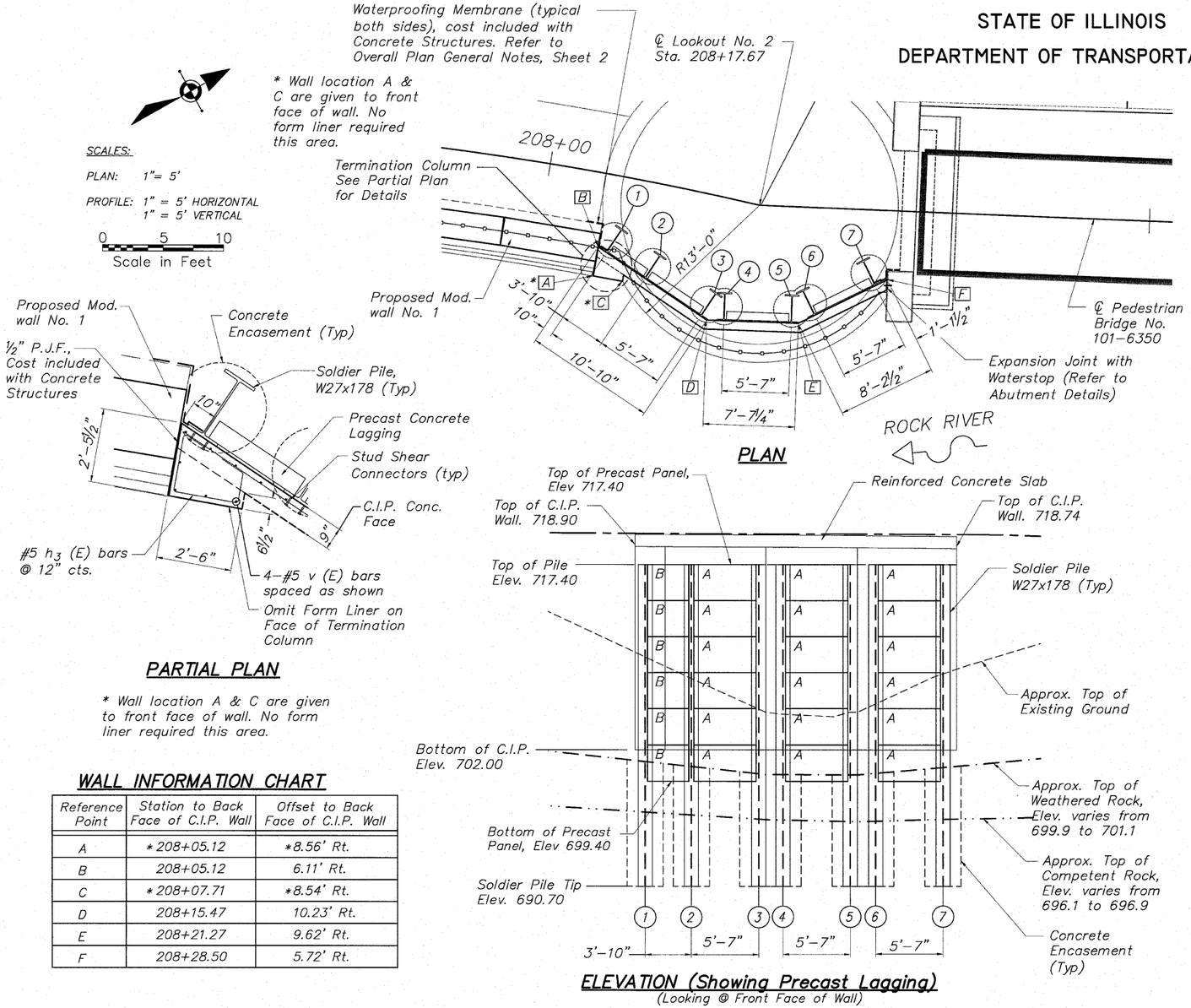

PLAN

ELEVATION (Showing Precast Lagging)
(Looking @ Front Face of Wall)

PARTIAL PLAN

* Wall location A & C are given to front face of wall. No form liner required this area.

WALL INFORMATION CHART

Reference Point	Station to Back Face of C.I.P. Wall	Offset to Back Face of C.I.P. Wall
A	*208+05.12	*8.56' Rt.
B	208+05.12	6.11' Rt.
C	*208+07.71	*8.54' Rt.
D	208+15.47	10.23' Rt.
E	208+21.27	9.62' Rt.
F	208+28.50	5.72' Rt.

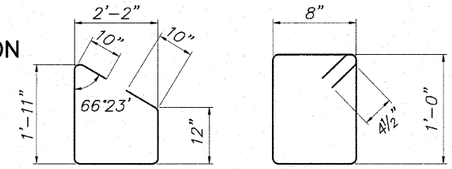

BAR h_3 BAR s

BILL OF MATERIAL
Cast-in-Place Concrete

Bar	No.	Size	Length	Shape
h (E)	20	#5	10'-7"	
h_1(E)	20	#5	7'-7"	
h_2(E)	20	#5	8'-0"	
h_3(E)	18	#5	6'-9"	
s (E)	28	#4	4'-1"	
v (E)	36	#5	16'-5"	
Concrete Structures			Cu. Yd.	15.0
Reinforcement Bars (Epoxy Coated)			Pound	1,365
Form Liner Textured Surface			Sq. Ft.	410
Staining Concrete Structures			Sq. Yd.	46
Anti-Grafitti Coating			Sq. Ft.	410
Rubbed Finish			Sq. Ft.	60

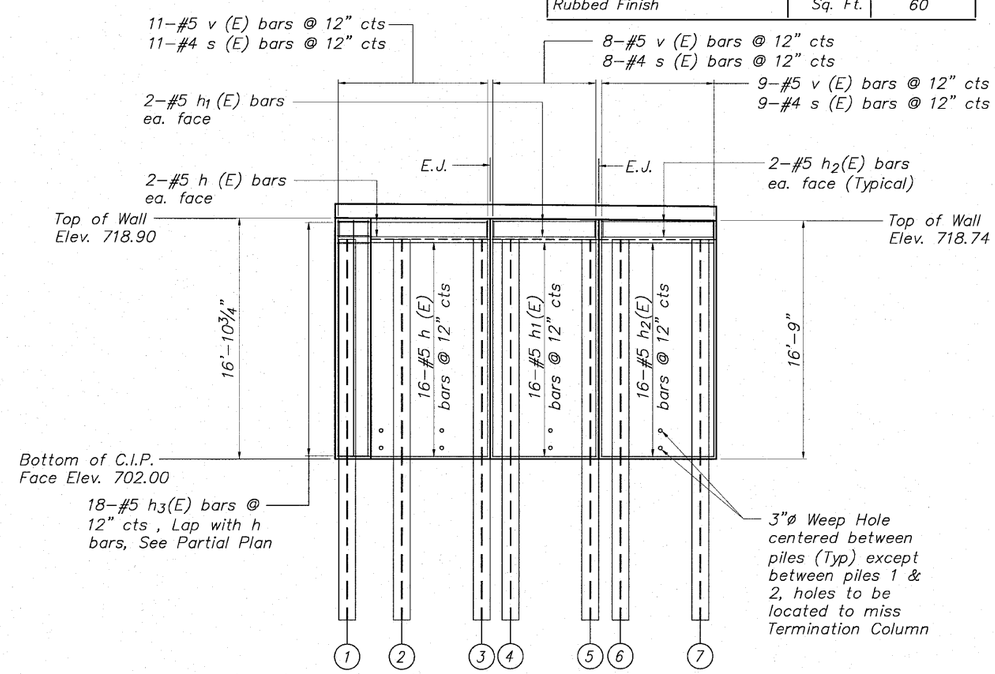

ELEVATION (Showing C.I.P. Facing Reinforcement)
(Looking @ Front Face of Wall)

SOLDIER PILE INFORMATION CHART

Reference Point	Station	Offset to ℄ of Hole	Offset to Center Front Flange of Pile	Pile Section	Top of Pile	Bottom of Pile	Finished Pile Length	Furnished Pile Length	No. Stud Shear Connectors
1	208+06.37	5.38' Rt.	6.44' Rt.	W27x178	717.40	690.70	26.70	27.70	30
2	208+09.99	6.86' Rt.	7.93' Rt.	W27x178	717.40	690.70	26.70	27.70	30
3	208+15.34	8.94' Rt.	10.02' Rt.	W27x178	717.40	690.70	26.70	27.70	30
4	208+16.70	8.83' Rt.	9.97' Rt.	W27x178	717.40	690.70	26.70	27.70	30
5	208+20.68	8.47' Rt.	9.62' Rt.	W27x178	717.40	690.70	26.70	27.70	30
6	208+22.06	7.88' Rt.	8.90' Rt.	W27x178	717.40	690.70	26.70	27.70	30
7	208+26.97	5.23' Rt.	6.25' Rt.	W27x178	717.40	690.70	26.70	27.70	30
					Totals		187 Ft.	194 Ft.	210 Ea.

PRECAST PANEL SCHEDULE

PANEL	NOMINAL SIZE	No.	Sq. Ft. PANELS
A	3' x 5'-2"	18	277.4
B	3' x 3'-5"	6	61.1
Total			339

MINIMUM BAR LAP

No. 4 bars	1'-8"
No. 5 bars	2'-2"
No. 6 bars	2'-7"

SP WALL No. 20 DETAILS
PEDESTRIAN RIVERWALK
ALONG THE ROCK RIVER
WINNEBAGO COUNTY
SECTION NO. 06-00543-00-BT
STATION 208+05.12 TO
STATION 208+28.50

DESIGNED	CTB
CHECKED	AAG
DRAWN	JAW
CHECKED	JWH

McClure Engineering Associates, Inc.
7282 Argus Drive Rockford, Illinois 61107-5837
(815) 398-2332 Fax (815) 398-2496
Design Firm License: Illinois#184-000816

SHEET NO. 2
5 SHEETS

F.A. RTE.	SECTION	COUNTY	TOTAL SHEETS	SHEET NO.
	06-00543-00-BT	WINNEBAGO	148	81
		CONTRACT NO.		85521
FED. ROAD DIST. NO.	ILLINOIS	FED. AID PROJECT		

STATE OF ILLINOIS
DEPARTMENT OF TRANSPORTATION

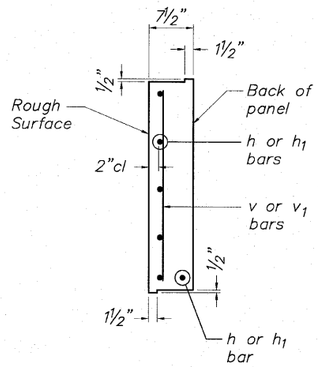

TYPICAL PANEL END VIEW

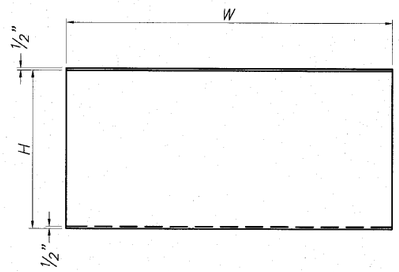

TYPICAL PANEL ELEVATION

NOTES:

1. Precast Concrete Lagging shall be labeled "front" (river side) or "back" (embankment side) at the time of casting by the manufacturer.
2. Precast Panels shall meet the requirements of Section 1042 of the Standard Specifications and shall be paid for at the contract unit price per square foot foot for Precast Concrete Lagging.
3. Contractor to backfill wall as precast panels are installed or provide blocking detail to Engineer for approval at no additional cost to the contract.
4. Contractor is advised that the portion of Modular Retaining Wall No. 1 directly adjacent to SP Wall No. 20 shall be constructed and backfilled as SP Wall No. 20 is backfilled. No additional compensation will be allowed for temporary shoring or additional excavation and backfilling due to staged work.

BORING NUMBER	STATION	OFFSET	GROUND ELEV.	EST. COMP. ROCK ELEV.
B-1	205+62	20.1' LT	728	N/A
B-2	206+69	44.3' LT	728	N/A
B-3	207+60	36.1' LT	728	701.5
B-4	208+20	43.1' RT	695	693.5
B-5	209+64	59.9' RT	693	691.0
B-6	210+83	40.15' RT	696	693.0
B-7	212+10	37.74' RT	696	694.5
B-8	213+71	34.17' RT	698	691.5
B-9	211+98	31.8' LT	716	706.0
B-10	211+67	77.9' LT	720	710.0
B-11	212+57	61.6' LT	721	705.0
B-12	211+12	200.5' LT	736	714.0
B-13	212+13	155.2' LT	730	709.0
B-14	209+57	39.5' LT	730	705.0
B-15	208+63	54.3' LT	730	700.0

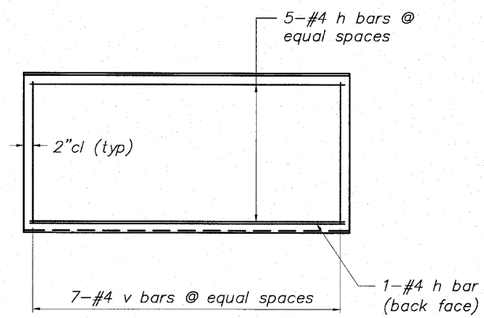

PANEL A REINFORCEMENT

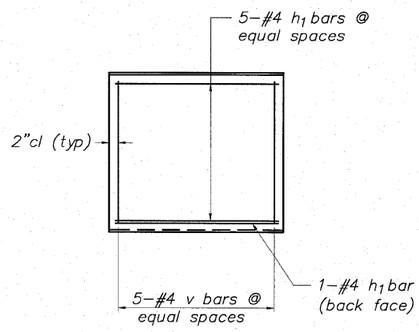

PANEL B REINFORCEMENT

PRECAST CONCRETE LAGGING PANEL DETAILS

*BILL OF MATERIAL

ONE PANEL A

Bar	No.	Size	Length	Shape
h	6	#4	4'-10"	———
v	7	#4	2'-8"	———
Concrete Structures			Cu. Yd.	0.35
Reinforcement Bars			Pound	31.8
Panel Area			Sq. Ft.	15.41

*BILL OF MATERIAL

ONE PANEL B

Bar	No.	Size	Length	Shape
h_1	6	#4	3'-1"	———
v	5	#4	2'-8"	———
Concrete Structures			Cu. Yd.	0.23
Reinforcement Bars			Pound	21.3
Panel Area			Sq. Ft.	10.19

* Concrete and reinforcement quantities are given for information only. Concrete and reinforcement for panels are included in the pay item "Precast Concrete Lagging".

PANEL SCHEDULE

PANEL	H	W
A	2'-11¾"	5'-2"
B	2'-11¾"	3'-5"

SP WALL No. 20 DETAILS
PRECAST PANEL DETAILS
PEDESTRIAN RIVERWALK
ALONG THE ROCK RIVER
WINNEBAGO COUNTY
SECTION NO. 06-00543-00-BT
STATION 208+05.12 TO
STATION 208+28.50

DESIGNED	CTB
CHECKED	AAG
DRAWN	JAW
CHECKED	JWH

McClure Engineering Associates, Inc.
7282 Argus Drive (815) 398-2332
Rockford, Illinois 61107-5637 Fax (815) 398-2496
Design Firm License: Illinois#184-000816

SHEET NO. 3
5 SHEETS

F.A. RTE.	SECTION	COUNTY	TOTAL SHEETS	SHEET NO.
	06-00543-00-BT	WINNEBAGO	148	82
		CONTRACT NO.		85521

FED. ROAD DIST. NO. | ILLINOIS | FED. AID PROJECT

STATE OF ILLINOIS
DEPARTMENT OF TRANSPORTATION

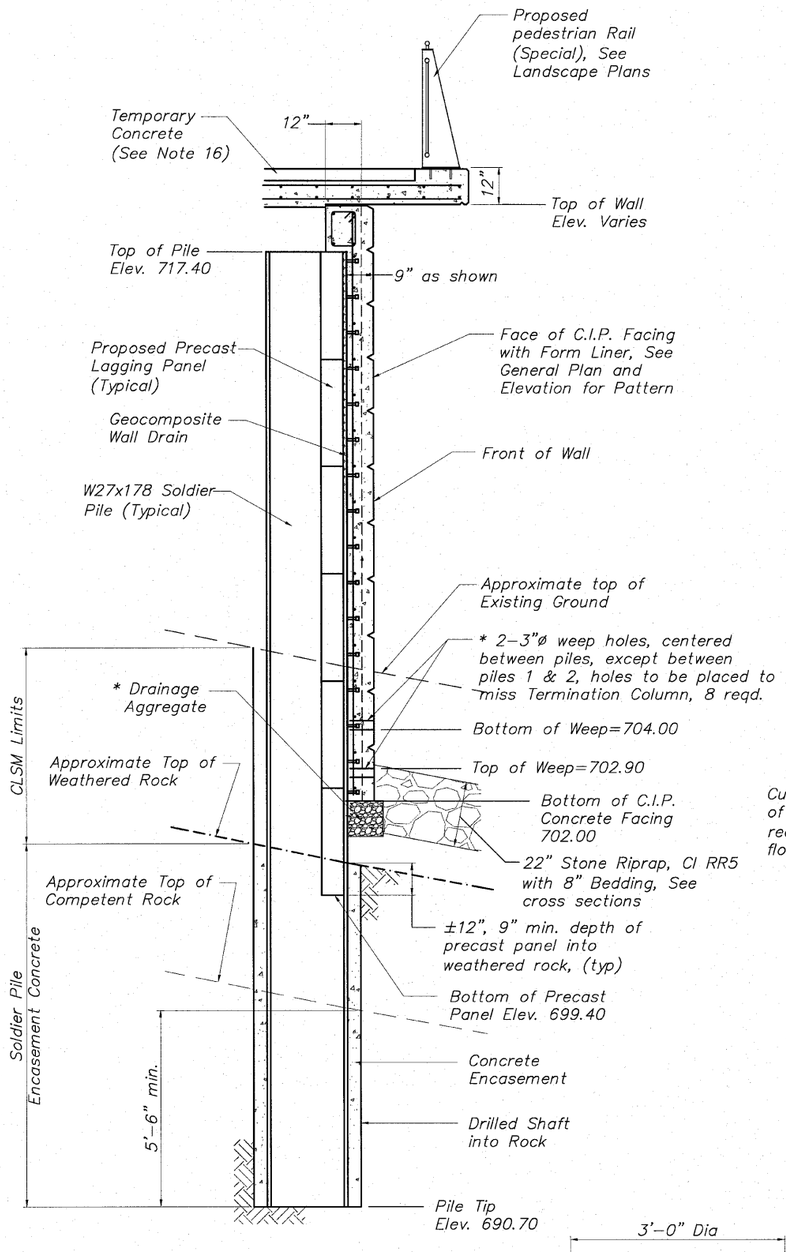

TYPICAL WALL SECTION

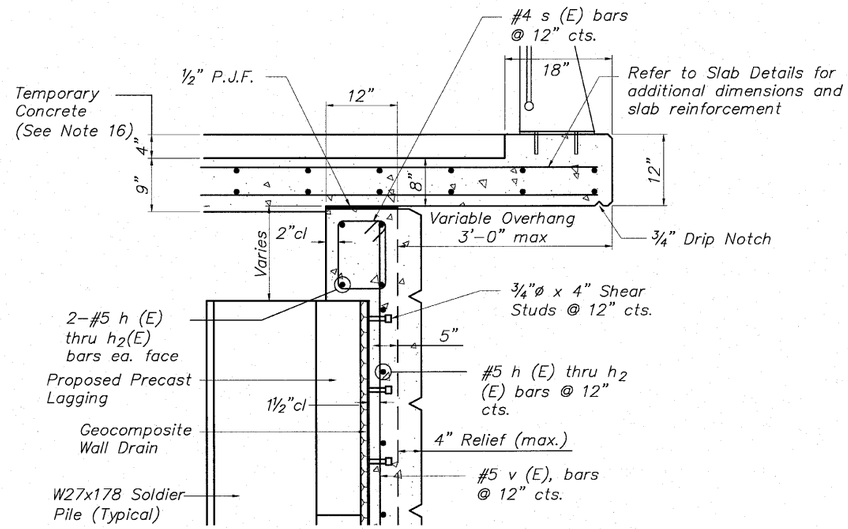

TYPICAL WALL SECTION
Showing Reinforcement

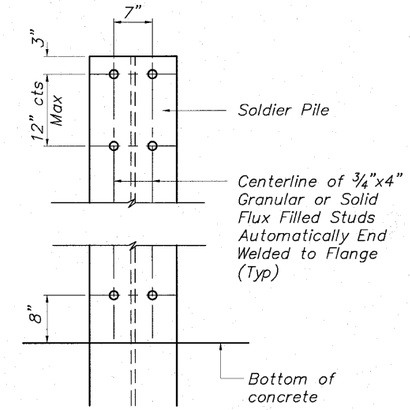

STUD SHEAR CONNECTOR LAYOUT

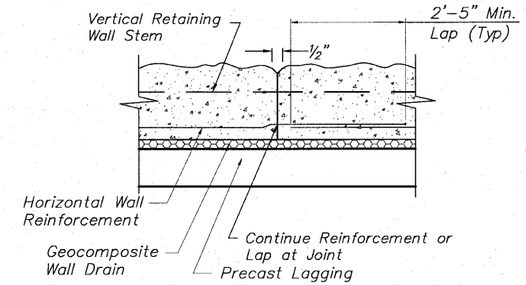

PLAN VIEW

TYPICAL CONSTRUCTION JOINT DETAIL
No Scale

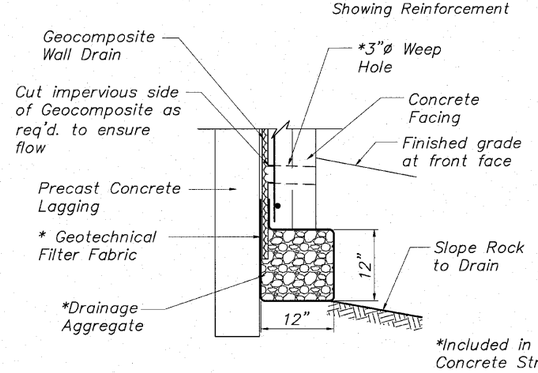

BETWEEN SOLDIER PILES

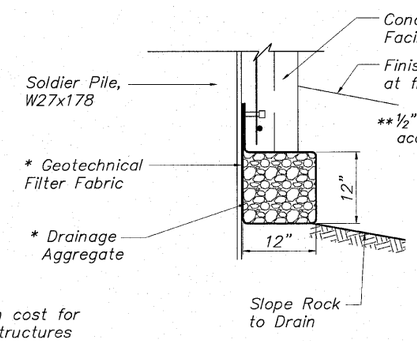

AT SOLDIER PILES

*Included in cost for Concrete Structures

DRAINAGE AGGREGATE DETAIL

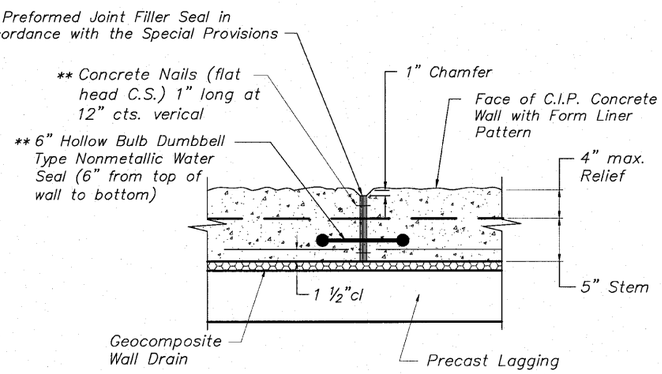

PLAN VIEW

Space Expansion Joints as Shown on Elevation
** Cost included with Concrete Structures

TYPICAL EXPANSION JOINT DETAIL
NO SCALE

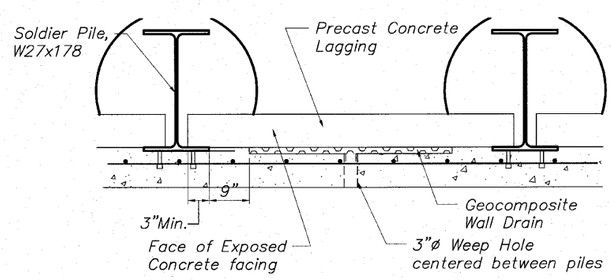

GEOCOMPOSITE WALL DRAIN DETAIL

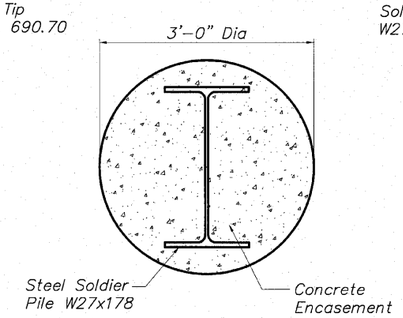

TYPICAL PILE ENCASEMENT SECTION
No Scale

MINIMUM BAR LAP

No. 4 bars	1'-8"
No. 5 bars	2'-2"
No. 6 bars	2'-7"

SP WALL No. 20 DETAILS
PEDESTRIAN RIVERWALK
ALONG THE ROCK RIVER
WINNEBAGO COUNTY
SECTION NO. 06-00543-00-BT
STATION 208+05.12 TO
STATION 208+28.50

DESIGNED	CTB
CHECKED	AAG
DRAWN	JAW
CHECKED	JWH

McClure Engineering Associates, Inc.
7282 Argus Drive, Rockford, Illinois 61107-5837
(815) 398-2332, Fax (815) 398-2496
Design Firm License: Illinois#184-000816

SHEET NO. 4
5 SHEETS

F.A. RTE.	SECTION	COUNTY	TOTAL SHEETS	SHEET NO.
	06-00543-00-BT	WINNEBAGO	148	83
		CONTRACT NO.		85521

FED. ROAD DIST. NO.	ILLINOIS	FED. AID PROJECT

STATE OF ILLINOIS

DEPARTMENT OF TRANSPORTATION

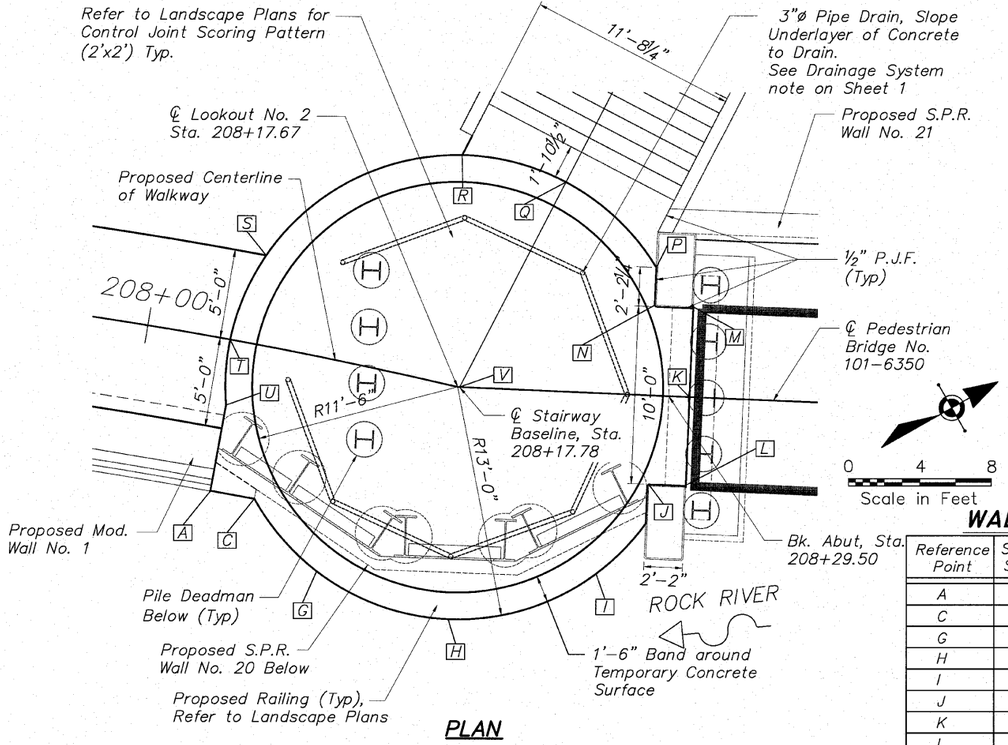

PLAN

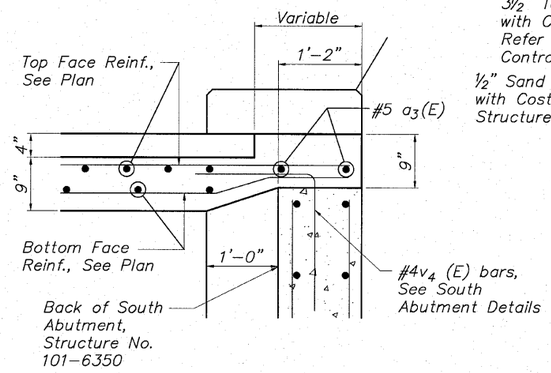

SECTION AT BRIDGE ABUTMENT

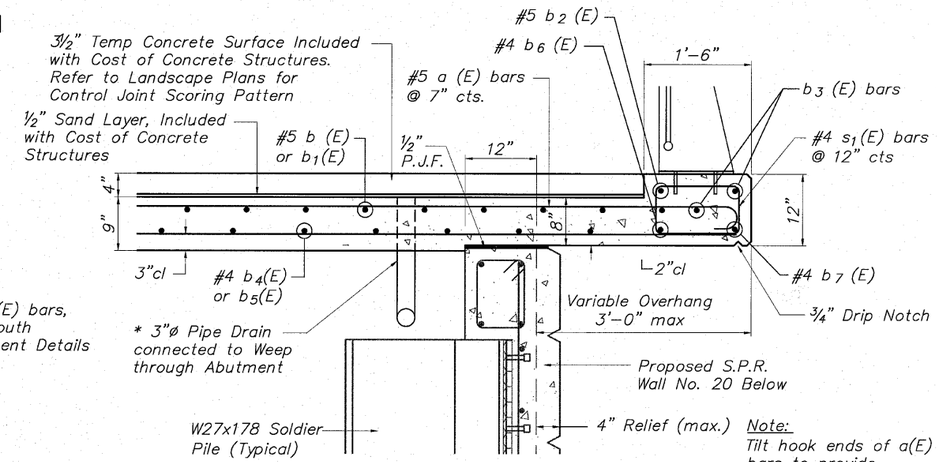

SECTION AT SOLDIER PILE WALL

Note: Tilt hook ends of a(E) bars to provide clearance

WALL INFORMATION CHART

Reference Point	Station to Top of Slab Elevation Pt.	Offset to Top of Slab Elevation Pt.	Elevation	Reference Point	Station to Top of Slab Elevation Pt.	Offset to Top of Slab Elevation Pt.	Elevation
A	208+05.12	8.56' Rt.	719.90	N	208+28.58	5.00' Lt.	719.87
C	208+07.71	8.54' Rt.	719.90	P	208+28.58	7.19' Lt.	719.92
G	208+13.21	12.25' Rt.	719.86	Q	208+23.14	11.74' Lt.	720.13
H	208+17.67	13.00' Rt.	719.81	R	208+15.08	12.73' Lt.	720.13
I	208+23.71	11.52' Rt.	719.71	S	208+05.79	5.00' Lt.	720.10
J	208+28.58	5.00' Rt.	719.76	T	208+04.67	0.00' Lt.	720.01
K	208+30.67	0.00' Rt.	719.84	U	208+05.11	3.67' Rt.	719.93
L	208+30.59	5.00' Rt.	719.79	V	208+17.67	0.00' Rt.	719.94
M	208+30.59	5.00' Lt.	719.89				

BILL OF MATERIAL

LOOKOUT No. 2 SLAB

Bar	No.	Size	Length	Shape
a (E)	38	#5	14'-7"	
a1(E)	11	#5	14'-0"	
a2(E)	9	#5	10'-8"	
a3(E)	2	#5	9'-8"	
a4(E)	26	#4	13'-8"	
a5(E)	19	#4	11'-7"	
a6(E)	2	#5	11'-9"	
b (E)	42	#5	14'-0"	
b1(E)	14	#5	10'-8"	
b2(E)	3	#5	24'-0"	R11'-8"
b3(E)	6	#5	23'-3"	R12'-9"
b4(E)	34	#4	13'-8"	
b5(E)	12	#4	10'-3"	
b6(E)	3	#4	23'-8"	R11'-8"
b7(E)	3	#4	23'-0"	R12'-9"
s1(E)	66	#4	4'-5"	
Concrete Structures			Cu. Yd.	16.1
Reinforcement Bars (Epoxy Coated)			Pound	2,938

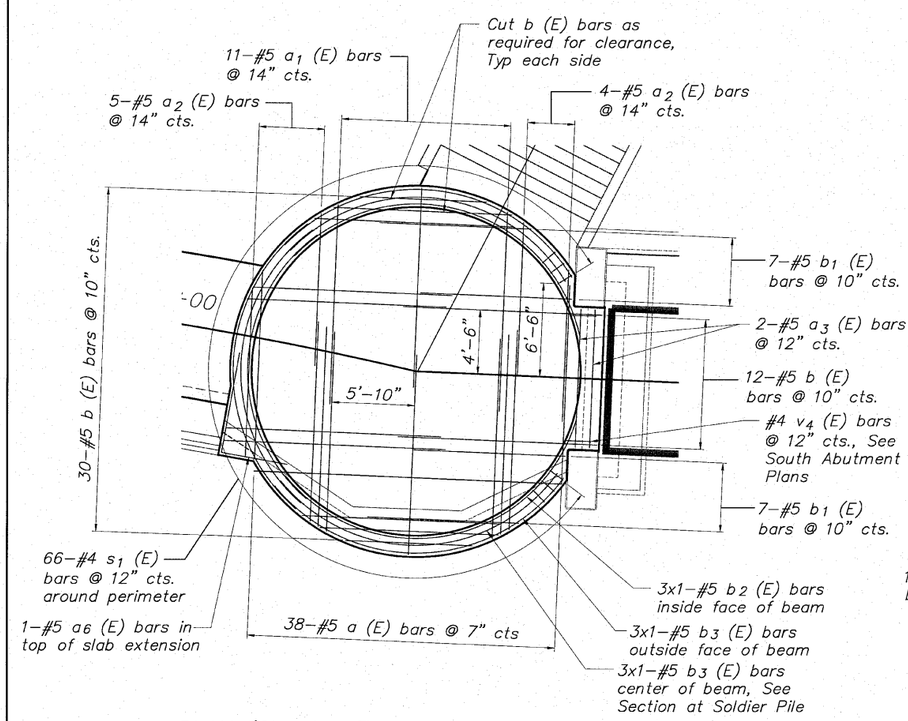

PLAN (Showing Top of Slab Reinforcement)

0 5 10
Scale in Feet

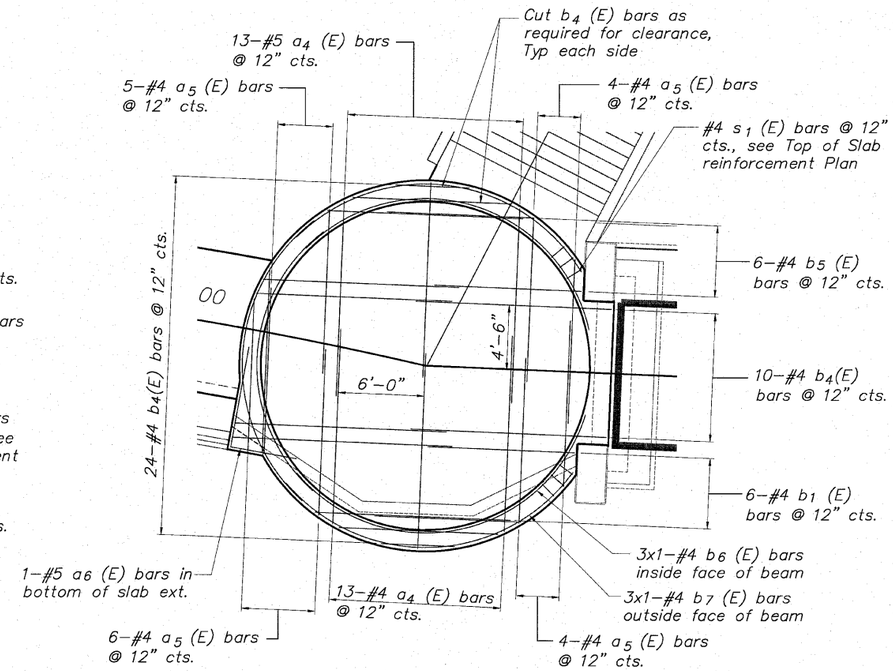

PLAN (Showing Bottom of Slab Reinforcement)

0 5 10
Scale in Feet

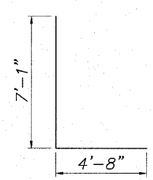

BAR a6(E)

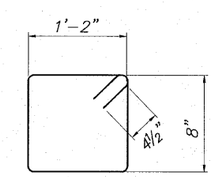

BAR s1(E)

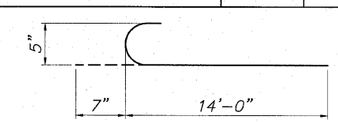

BAR a (E)

SLAB DETAILS LOOKOUT No. 2
PEDESTRIAN RIVERWALK
ALONG THE ROCK RIVER
WINNEBAGO COUNTY
SECTION NO. 06-00543-00-BT
STATION 208+17.67

DESIGNED	CTB
CHECKED	AAG
DRAWN	JAW
CHECKED	JWH

McClure Engineering Associates, Inc.
7282 Argus Drive, Rockford, Illinois 61107-5837
(815) 398-2332 Fax (815) 398-2496
Design Firm License: Illinois#184-000816

SHEET NO. 5
5 SHEETS

F.A. RTE.	SECTION	COUNTY	TOTAL SHEETS	SHEET NO.
	06-00543-00-BT	WINNEBAGO	148	84
		CONTRACT NO.		85521
FED. ROAD DIST. NO.	ILLINOIS	FED. AID PROJECT		

BENCHMARK		
NO.	DESCRIPTION	ELEVATION
	North Bonnet Bolt on Fire Hydrant South Of Museum Entrance on the East side of N. Main Street	736.60

Notes: Wall Offsets are Measured from the ℄ of the Pedestrian Walkway to the Back Face of the Cast–In–Place Portion of the Soldier Pile Wall.

S.P.R.W. = Soldier Pile Retaining Wall
C.I.P. = Cast–in–Place

STATE OF ILLINOIS
DEPARTMENT OF TRANSPORTATION

EXISTING STRUCTURE: None

SCALES:
PLAN: 1"= 20'
PROFILE: 1" = 20' HORIZONTAL
1" = 20' VERTICAL
0 20 40
Scale in Feet

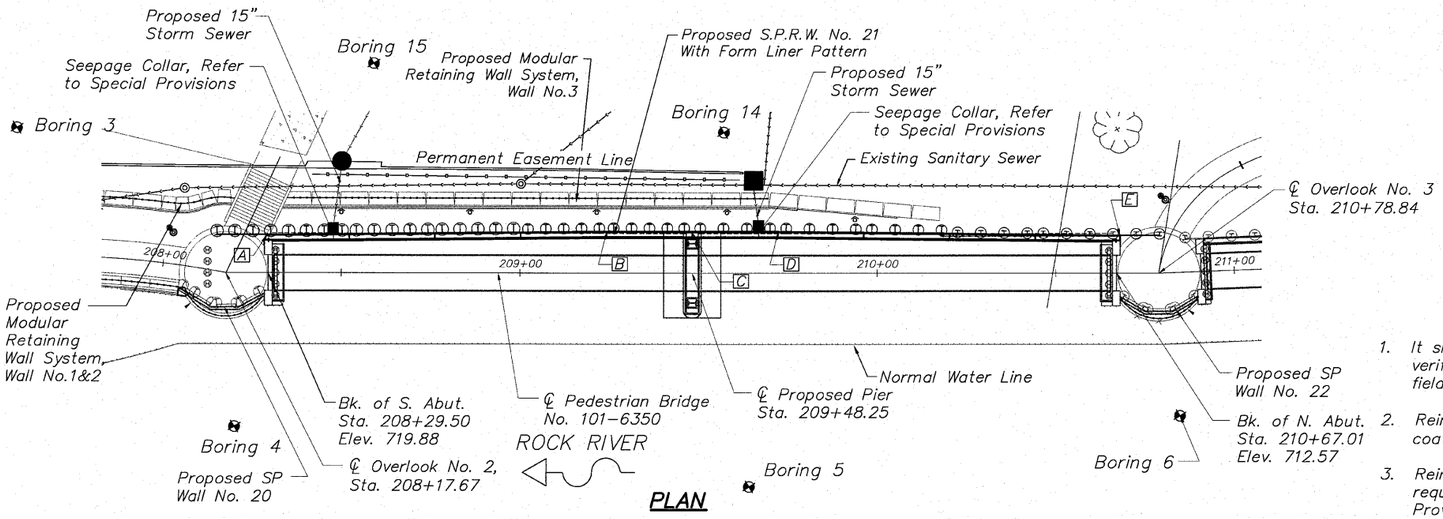

PLAN

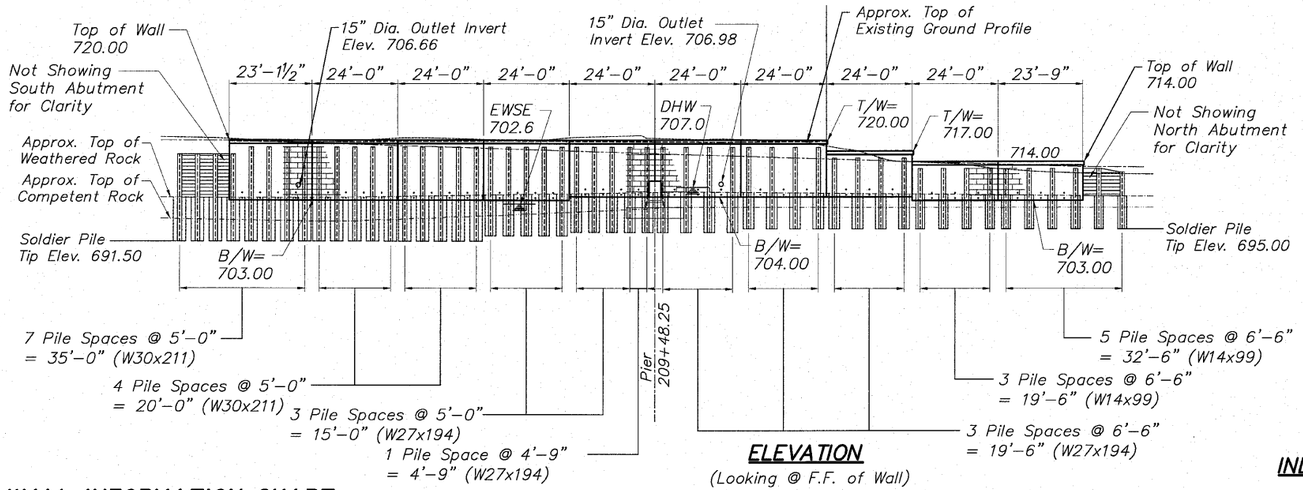

ELEVATION
(Looking @ F.F. of Wall)

TOTAL BILL OF MATERIALS

SP WALL No. 21

ITEM	UNITS	TOTAL
Structure Excavation	Cu. Yd.	1,226
Concrete Structures	Cu. Yd	182.4
Protective Coat	Sq. Yd.	448
Stud Shear Connectors	Each	1,196
Untreated Timber Lagging	Sq. Ft.	2,707
Furnishing Soldier Piles (W Section–14x99)	Foot	179
Furnishing Soldier Piles (W Section–27x194)	Foot	535
Furnishing Soldier Piles (W Section–30x211)	Foot	487
Drilling and Setting Soldier Piles in Rock	Cu. Ft.	4,082
Drilling and Setting Soldier Piles in Soil	Cu. Ft.	6,027
Reinforcement Bars (Epoxy Coated)	Pound	15,325
Geocomposite Wall Drain	Sq. Yd.	154
Rubbed Finish	Sq. Ft.	637
Form Liner Textured Surface	Sq. Ft.	3,395
Rock Excavation for Structures, Special	Cu. Yd.	28.5
Anti–Grafitti Coating	Sq. Ft.	4,032
Staining Concrete Structures	Sq. Yd.	377

GENERAL NOTES

1. It shall be the responsibility of the Contractor to verify all dimensions and conditions existing in the field prior to construction and ordering materials.
2. Reinforcement bars designated (E) shall be epoxy coated.
3. Reinforcement bars shall conform to the requirements of ASTM A706 Gr 60. See Special Provisions.
4. Reinforcing bars shall be lapped a minimum as shown on plans where splices occur. Radius bars shall be factory bent and delivered to the site with appropriate radius. Field bending will only be allowed to achieve form clearances.
5. Stud shear connectors shall be ¾" diameter x 6" granular or flux filled headed studs automatically end welded to the front flange in the field.
6. Protective coat shall be applied to all exposed surfaces of the wall and shall extend 1'–0" minimum below finished grade.
7. All construction joints shall be bonded.
8. The cost of cutting off any piling in excess of that needed shall be included in the cost of "Drilling and Setting Soldier Piles".
9. Drilling and setting of soldier piles will require drilling through layers of sand and gravel. Refer to boring logs. The use of temporary drill casings or drilling slurry may be required to keep holes open prior to placement of concrete at no additional cost to the contract. Refer to Special Provisions for Drilling and Setting Soldier Piles.
10. The approximate embedment depth for the soldier pile tip is as provided on the plans and considers a penetration into competent rock of 5.5 feet (minimum) based on the soil boring information and uniaxial compressive rock strength value of 4,000 PSI (minimum) as provided by Terracon Consultants, Inc. The actual top of rock elevation, which qualifies as competent rock meeting the minimum requirements of the design, shall be determined and field verified by the geotechnical engineer during the drilling operation at each soldier pile location. Final pile tip elevations shall be a minimum of 5.5 feet below actual top of competent rock elevations.
11. All exposed edges shall have a ¾" x 45° chamfer, except as shown otherwise. Chamfers on vertical edges shall be continued a minimum of one foot below finished ground level.
12. Exposed surfaces of concrete shall be given a "rubbed finish" except where form liner is specified.
13. Contractor shall be responsible for any dewatering in accordance with the erosion control plan at no additional cost to the contract.
14. Backfill behind wall shall be placed to the lines and grades as shown on the plans. The Contractor shall take care to ensure the use of suitable material and proper compaction of all fill areas. Compaction shall be performed with a loose thickness of no more than 8" and each lift shall be compacted to a density equal to or greater than 95% standard proctor maximum dry density (ASTM D–698) taking care not to over compact the soil directly behind the wall. Moisture shall be within –2 to +3 percent of optimum. No heavy equipment shall be allowed within 6 feet of the wall during backfilling and compaction. Compaction shall be by hand method, "walk behind", equipment in the areas within 6 feet of the face of the wall.
15. The Contractor is responsible for the design and performance of the lagging using no less than a 3" nominal rough–sawn thickness and timber with allowable bending stress of 1000 psi.

WALL INFORMATION CHART

Reference Point	Station to Back Face of C.I.P. Wall	Offset to Back Face of C.I.P. Wall
A	208+29.12	10.50' Rt.
B	209+24.26	11.50' Rt.
C	209+48.26	11.50' Rt.
D	209+72.26	11.50' Rt.
E	210+68.01	10.50' Rt.

MINIMUM BAR LAP

No. 4 bars 1'–8"
No. 5 bars 2'–2"
No. 6 bars 2'–7"

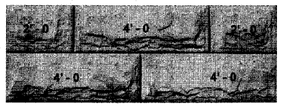

FORM LINER PATTERN

Milestone, Inc.
Pattern No. MS–1011
Weathered Limestone or Equal
(See Special Provisions)

HIGHWAY CLASSIFICATION

Rockford Pedestrian Riverwalk
Functional Class: Pedestrian

DESIGN SPECIFICATIONS

2002 AASHTO
Standard Specifications – 17th Edition

DESIGN STRESSES

Field Units
f'c = 3,500 psi (Cast–In Place Concrete)
fy = 60,000 psi (Reinforcement)
fy = 50,000 psi (Soldier Pile Steel)

INDEX OF WALL No. 21 SHEETS

Reviewed and Approved for Structural Adequacy Only

Todd C. Ude 9/1/2010

LICENSED STRUCTURAL ENGINEER
TODD C. UDE
081-005764
EXP. 11/30/2010
STATE OF ILLINOIS

ALI A. GHARAMTI
081-006060
LICENSED STRUCTURAL ENGINEER OF MOLINE
STATE OF ILLINOIS

Signature

8/31/10
Date

GENERAL PLAN & ELEVATION
SP WALL No. 21
PEDESTRIAN RIVERWALK
ALONG THE ROCK RIVER
WINNEBAGO COUNTY
SECTION NO. 06–00543–00–BT
STATION 208+13.27 TO STATION 210+79.46

DESIGNED	CTB
CHECKED	AAG
DRAWN	JAW
CHECKED	JWH

— 20
EXAMINED
ENGINEER OF BRIDGE DESIGN
PASSED
ENGINEER OF BRIDGES AND STRUCTURES

McClure Engineering Associates, Inc.
7282 Argus Drive
(815) 398–2332
Rockford, Illinois 61107–5837
Fax (815) 398–2496
Design Firm License: Illinois#184–000816

SHEET NO. 1
5 SHEETS

F.A. RTE.	SECTION	COUNTY	TOTAL SHEETS	SHEET NO.
	06-00543-00-BT	WINNEBAGO	148	85
		CONTRACT NO.		85521
FED. ROAD DIST. NO.	ILLINOIS	FED. AID PROJECT		

H:\08-008 RIVERWALK MUSEUM\DESIGN\DRAWINGS\STRUCTURAL\GP&E\08-008 SP-WALL 21.DWG, GP&E WALL 21, 8/30/2010 3:21:51 PM,
EI: JWH

STATE OF ILLINOIS
DEPARTMENT OF TRANSPORTATION

SCALES:
PLAN: 1"= 5'
PROFILE: 1" = 5' HORIZ
1" = 5' VERT
0 5 10
Scale in Feet

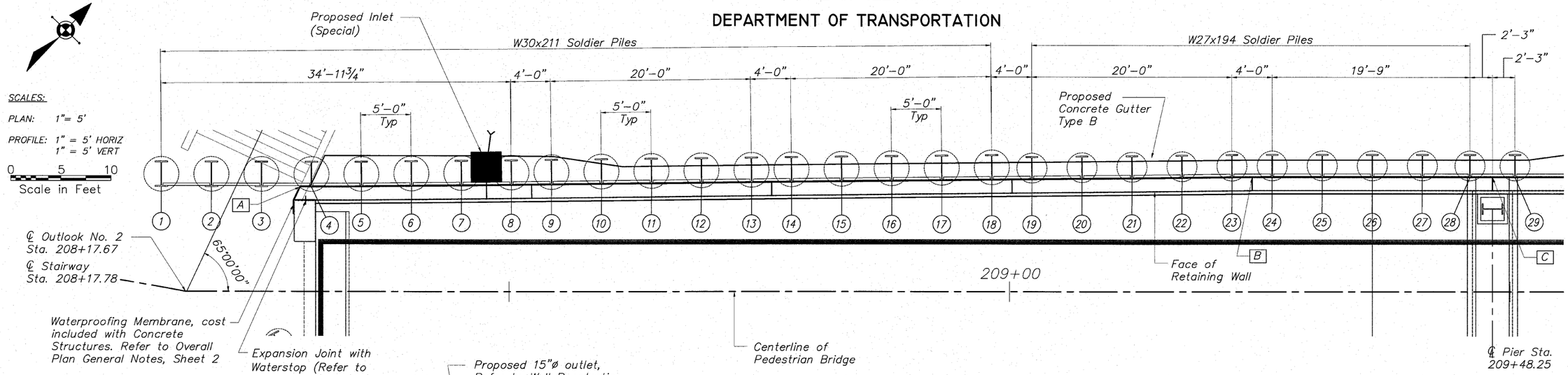

PARTIAL PLAN
(South Half of Wall)

E.J.=Expansion Joint
C.J.=Construction Joint
T.C.=Top of Curb (Gutter)

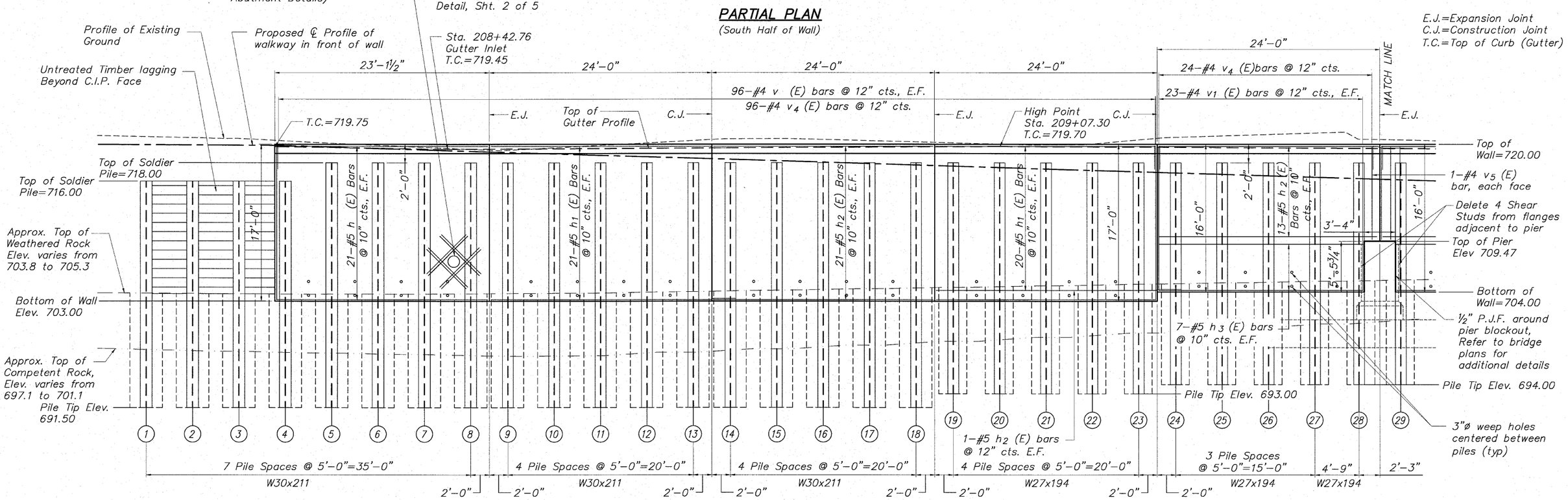

PARTIAL ELEVATION (Showing Reinforcement)
(Looking @ Front Face of Wall)

MINIMUM BAR LAP

No. 4 bars	1'-8"
No. 5 bars	2'-2"
No. 6 bars	2'-7"

SP WALL No. 21 DETAILS
PEDESTRIAN RIVERWALK
ALONG THE ROCK RIVER
WINNEBAGO COUNTY
SECTION NO. 06-00543-00-BT
STATION 208+13.27 TO STATION 210+79.46

DESIGNED	CTB
CHECKED	AAG
DRAWN	JAW
CHECKED	JWH

McClure Engineering Associates, Inc.
7282 Argus Drive
(815) 398-2332
Rockford, Illinois 61107-5837
Fax (815) 398-2496
Design Firm License: Illinois#184-000816

SHEET NO. 2
5 SHEETS

F.A. RTE.	SECTION	COUNTY	TOTAL SHEETS	SHEET NO.
	06-00543-00-BT	WINNEBAGO	148	86
		CONTRACT NO.		85521
FED. ROAD DIST. NO.	ILLINOIS	FED. AID PROJECT		

STATE OF ILLINOIS
DEPARTMENT OF TRANSPORTATION

SCALES:
PLAN: 1"= 5'
PROFILE: 1" = 5' HORIZ
1" = 5' VERT
0 5 10
Scale in Feet

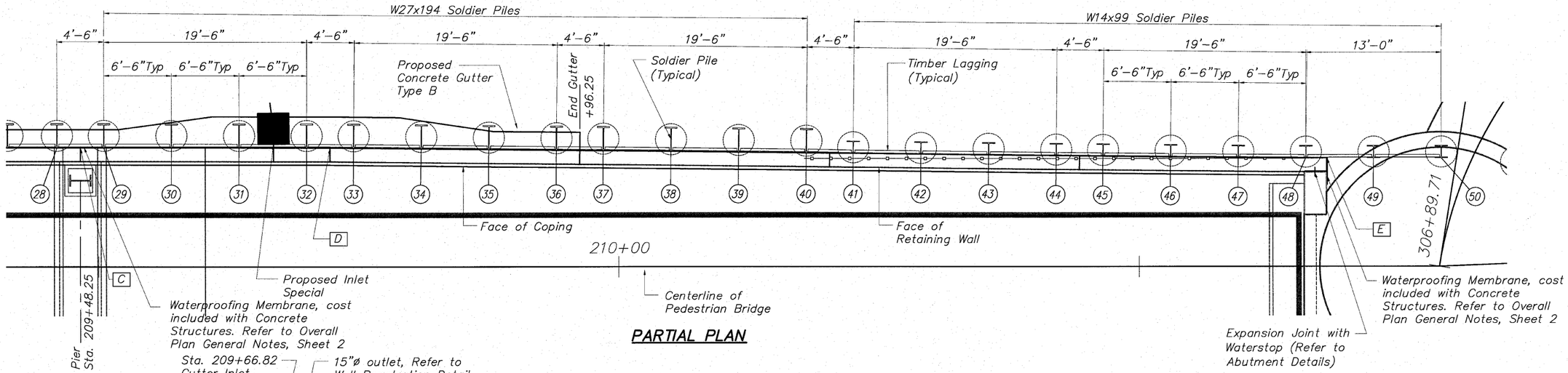

PARTIAL PLAN

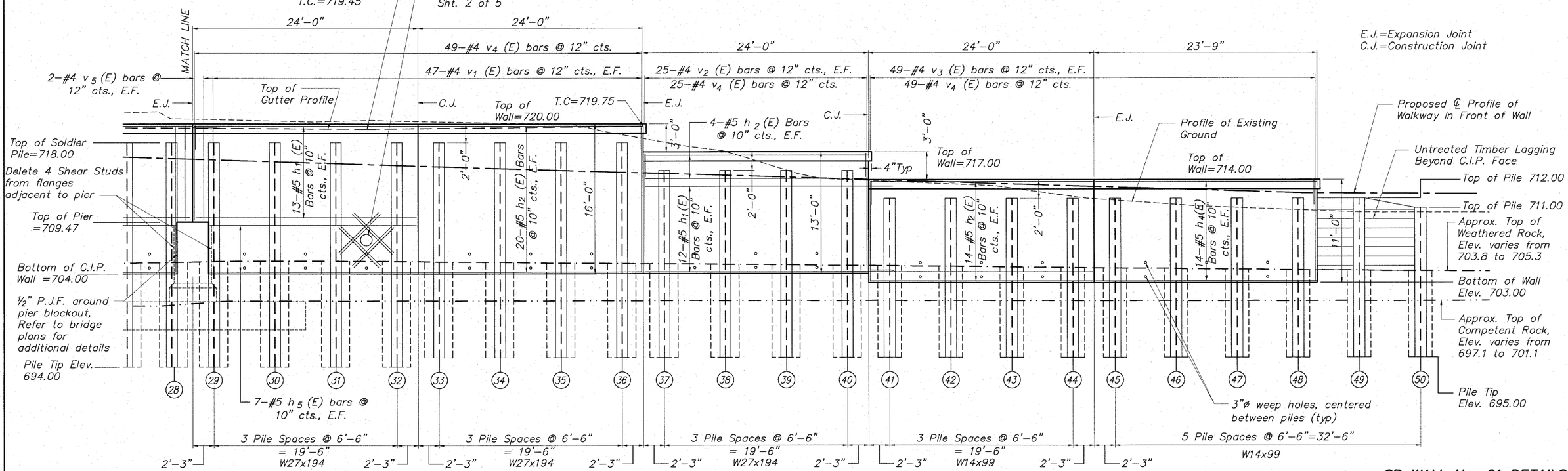

PARTIAL ELEVATION (Showing Reinforcement)
(Looking @ Front Face of Wall)

MINIMUM BAR LAP

No. 4 bars	1'-8"
No. 5 bars	2'-2"
No. 6 bars	2'-7"

SP WALL No. 21 DETAILS
PEDESTRIAN RIVERWALK
ALONG THE ROCK RIVER
WINNEBAGO COUNTY
SECTION NO. 06-00543-00-BT
STATION 208+13.27 TO
STATION 210+79.46

DESIGNED	CTB
CHECKED	AAG
DRAWN	JAW
CHECKED	JWH

McClure Engineering Associates, Inc.
7282 Argus Drive (815) 398-2332
Rockford, Illinois 61107-5837 Fax (815) 398-2496
Design Firm License: Illinois#184-000816

SHEET NO. 3
5 SHEETS

F.A. RTE.	SECTION	COUNTY	TOTAL SHEETS	SHEET NO.
	06-00543-00-BT	WINNEBAGO.	148	87
		CONTRACT NO.		85521
FED. ROAD DIST. NO.	ILLINOIS	FED. AID PROJECT		

STATE OF ILLINOIS

DEPARTMENT OF TRANSPORTATION

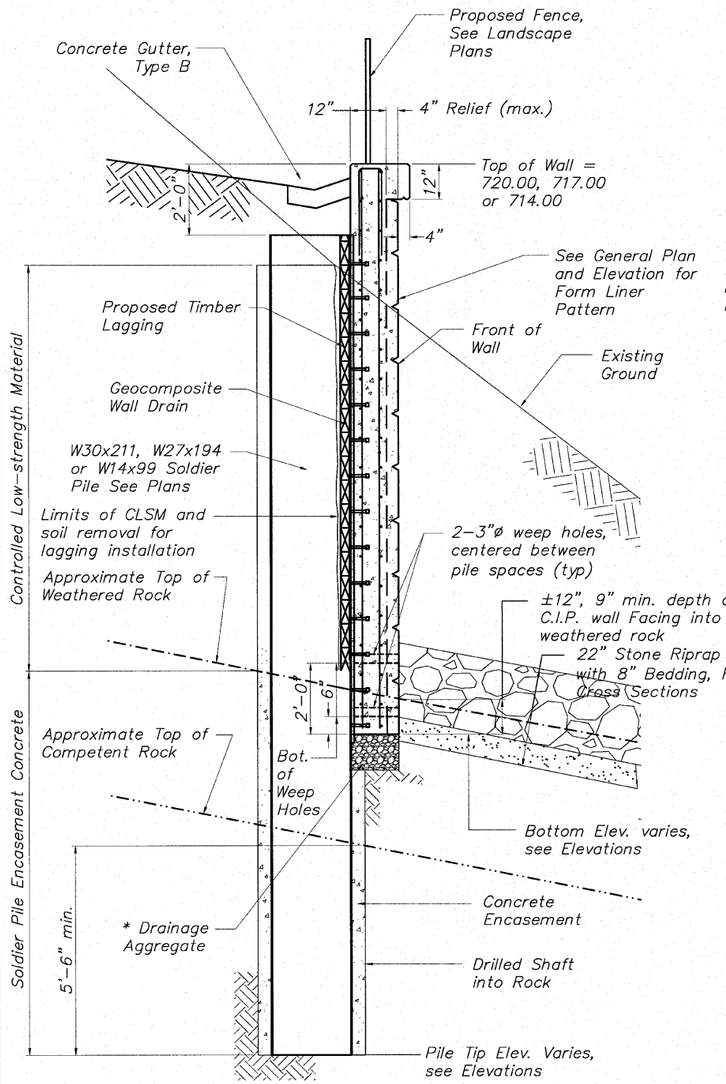

TYPICAL WALL SECTION

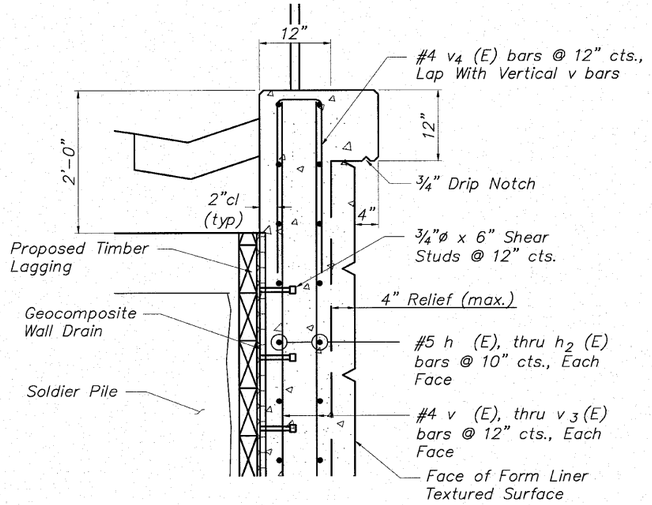

TYPICAL WALL SECTION

Showing Reinforcement

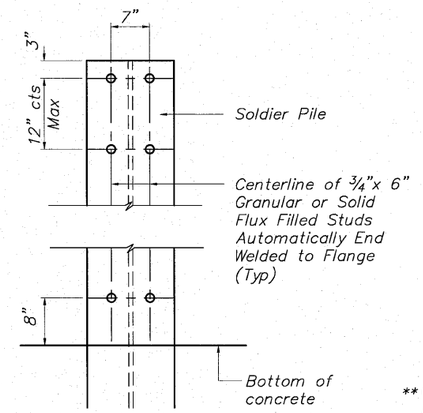

STUD SHEAR CONNECTOR LAYOUT

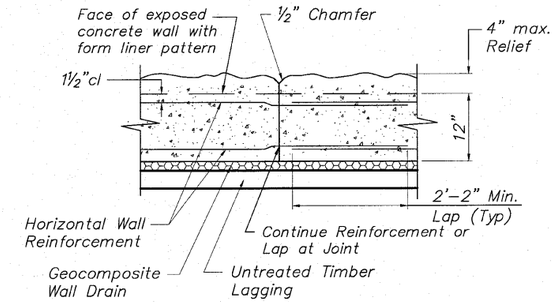

PLAN VIEW

TYPICAL CONSTRUCTION JOINT DETAIL

No Scale

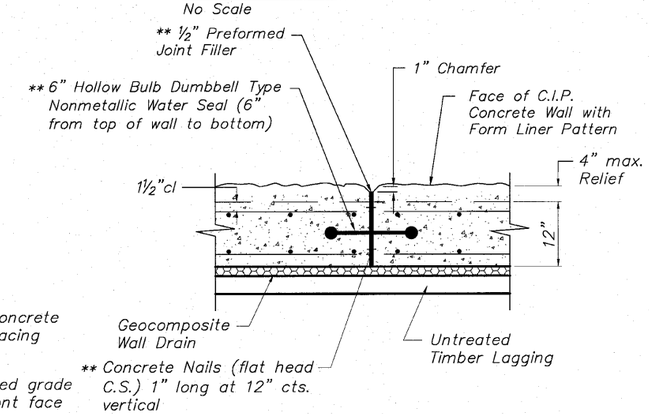

PLAN VIEW

Space Expansion Joints as Shown on Elevation

** Cost included with Concrete Structures

TYPICAL EXPANSION JOINT DETAIL

No Scale

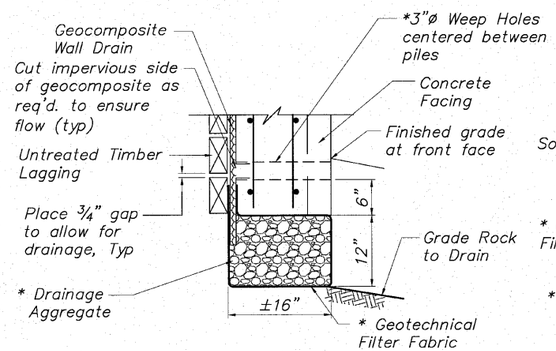

BETWEEN SOLDIER PILES

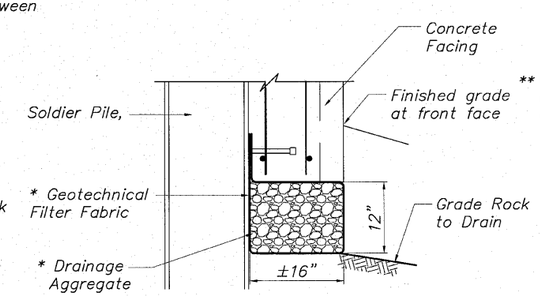

AT SOLDIER PILES

* Included in the cost for Concrete Structures

DRAINAGE AGGREGATE DETAIL

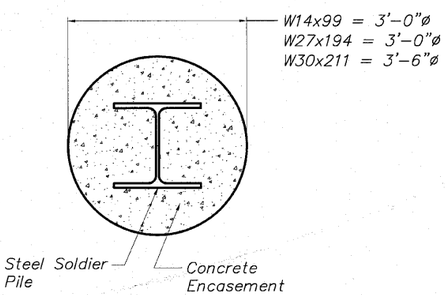

TYPICAL PILE ENCASEMENT SECTION

No Scale

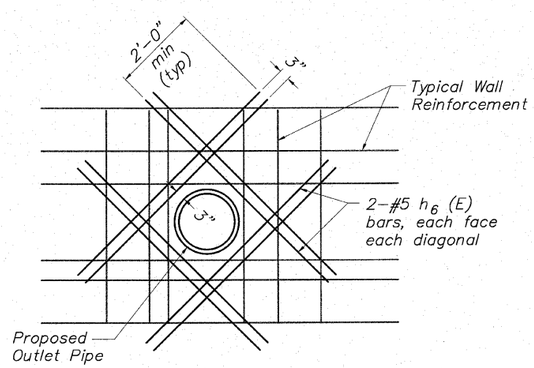

Move horizontal and vertical wall reinforcement up to one half their bar spacing to miss wall opening

WALL PENETRATION DETAIL

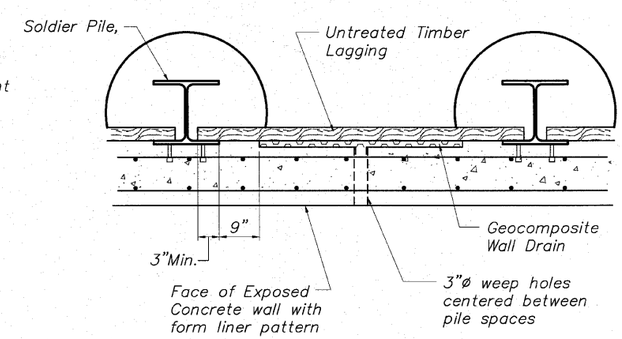

GEOCOMPOSITE WALL DRAIN DETAIL

SP WALL No. 21 DETAILS
PEDESTRIAN RIVERWALK
ALONG THE ROCK RIVER
WINNEBAGO COUNTY
SECTION NO. 06-00543-00-BT
STATION 208+13.27 TO
STATION 210+79.46

DESIGNED	CTB
CHECKED	AAG
DRAWN	JAW
CHECKED	JWH

McClure Engineering Associates, Inc.
7282 Argus Drive (815) 398-2332
Rockford, Illinois 61107-5837 Fax (815) 398-2496
Design Firm License: Illinois#184-000816

SHEET NO. 4

5 SHEETS

F.A. RTE.	SECTION	COUNTY	TOTAL SHEETS	SHEET NO.
	06-00543-00-BT	WINNEBAGO	148	88
		CONTRACT NO.		85521
FED. ROAD DIST. NO.	ILLINOIS	FED. AID PROJECT		

STATE OF ILLINOIS
DEPARTMENT OF TRANSPORTATION

SOLDIER PILE INFORMATION CHART

Reference Point	Station	Offset to ℄ of Hole	Offset to Center front Flange of Pile	Pile Section	Top of Pile	Bottom of Pile	Finished Pile Length	Furnished Pile Length	No. Stud Shear Connectors
1	208+13.27	11.16' Lt.	9.50' Lt.	W30x211	716.00	691.50	24.50'	25.50'	–
2	208+20.25	11.79' Lt.	10.50' Lt.	W30x211	716.00	691.50	24.50'	25.50'	–
3	208+25.25	11.79' Lt.	10.50' Lt.	W30x211	716.00	691.50	24.50'	25.50'	–
4	208+30.25	11.79' Lt.	10.50' Lt.	W30x211	716.00	691.50	24.50'	25.50'	30
5	208+35.23	11.80' Lt.	10.52' Lt.	W30x211	718.00	691.50	26.50'	27.50'	30
6	208+40.23	11.86' Lt.	10.57' Lt.	W30x211	718.00	691.50	26.50'	27.50'	30
7	208+45.23	11.92' Lt.	10.63' Lt.	W30x211	718.00	691.50	26.50'	27.50'	30
8	208+50.23	11.97' Lt.	10.68' Lt.	W30x211	718.00	691.50	26.50'	27.50'	30
9	208+54.23	12.01' Lt.	10.73' Lt.	W30x211	718.00	691.50	26.50'	27.50'	30
10	208+59.23	12.07' Lt.	10.78' Lt.	W30x211	718.00	691.50	26.50'	27.50'	30
11	208+64.23	12.13' Lt.	10.84' Lt.	W30x211	718.00	691.50	26.50'	27.50'	30
12	208+69.23	12.18' Lt.	10.89' Lt.	W30x211	718.00	691.50	26.50'	27.50'	30
13	208+74.23	12.24' Lt.	10.95' Lt.	W30x211	718.00	691.50	26.50'	27.50'	30
14	208+78.23	12.28' Lt.	10.99' Lt.	W30x211	718.00	691.50	26.50'	27.50'	30
15	208+83.23	12.33' Lt.	11.05' Lt.	W30x211	718.00	691.50	26.50'	27.50'	30
16	208+88.23	12.39' Lt.	11.10' Lt.	W30x211	718.00	691.50	26.50'	27.50'	30
17	208+93.23	12.45' Lt.	11.16' Lt.	W30x211	718.00	691.50	26.50'	27.50'	30
18	208+98.23	12.50' Lt.	11.21' Lt.	W30x211	718.00	691.50	26.50'	27.50'	30
19	209+02.23	12.43' Lt.	11.26' Lt.	W27x194	718.00	693.00	25.00'	26.00'	30
20	209+07.23	12.48' Lt.	11.31' Lt.	W27x194	718.00	693.00	25.00'	26.00'	30
21	209+12.23	12.54' Lt.	11.37' Lt.	W27x194	718.00	693.00	25.00'	26.00'	30
22	209+17.23	12.59' Lt.	11.42' Lt.	W27x194	718.00	693.00	25.00'	26.00'	30
23	209+22.23	12.65' Lt.	11.48' Lt.	W27x194	718.00	693.00	25.00'	26.00'	30
24	209+26.25	12.67' Lt.	11.50' Lt.	W27x194	718.00	694.00	24.00'	25.00'	28
25	209+31.25	12.67' Lt.	11.50' Lt.	W27x194	718.00	694.00	24.00'	25.00'	28
26	209+36.25	12.67' Lt.	11.50' Lt.	W27x194	718.00	694.00	24.00'	25.00'	28
27	209+41.25	12.67' Lt.	11.50' Lt.	W27x194	718.00	694.00	24.00'	25.00'	28
28	209+46.01	12.67' Lt.	11.50' Lt.	W27x194	718.00	694.00	24.00'	25.00'	24 *
29	209+50.51	12.67' Lt.	11.50' Lt.	W27x194	718.00	694.00	24.00'	25.00'	24 *
30	209+57.01	12.67' Lt.	11.50' Lt.	W27x194	718.00	694.00	24.00'	25.00'	28
31	209+63.51	12.67' Lt.	11.50' Lt.	W27x194	718.00	694.00	24.00'	25.00'	28
32	209+70.01	12.67' Lt.	11.50' Lt.	W27x194	718.00	694.00	24.00'	25.00'	28
33	209+74.53	12.65' Lt.	11.48' Lt.	W27x194	718.00	695.00	23.00'	24.00'	28
34	209+81.03	12.57' Lt.	11.40' Lt.	W27x194	718.00	695.00	23.00'	24.00'	28
35	209+87.53	12.50' Lt.	11.33' Lt.	W27x194	718.00	695.00	23.00'	24.00'	28
36	209+94.03	12.43' Lt.	11.26' Lt.	W27x194	718.00	695.00	23.00'	24.00'	28
37	209+98.53	12.38' Lt.	11.21' Lt.	W27x194	715.00	695.00	20.00'	21.00'	24
38	210+05.03	12.31' Lt.	11.14' Lt.	W27x194	715.00	695.00	20.00'	21.00'	24
39	210+11.53	12.24' Lt.	11.07' Lt.	W27x194	715.00	695.00	20.00'	21.00'	24
40	210+18.03	12.17' Lt.	10.99' Lt.	W27x194	715.00	695.00	20.00'	21.00'	24
41	210+22.52	11.54' Lt.	10.95' Lt.	W14x99	712.00'	695.00	17.00'	18.00'	18
42	210+29.02	11.47' Lt.	10.87' Lt.	W14x99	712.00'	695.00	17.00'	18.00'	18
43	210+35.52	11.39' Lt.	10.80' Lt.	W14x99	712.00'	695.00	17.00'	18.00'	18
44	210+42.02	11.32' Lt.	10.73' Lt.	W14x99	712.00'	695.00	17.00'	18.00'	18
45	210+46.52	11.27' Lt.	10.68' Lt.	W14x99	712.00'	695.00	17.00'	18.00'	18
46	210+53.02	11.20' Lt.	10.61' Lt.	W14x99	712.00'	695.00	17.00'	18.00'	18
47	210+59.52	11.13' Lt.	10.54' Lt.	W14x99	712.00'	695.00	17.00'	18.00'	18
48	210+66.02	11.09' Lt.	10.50' Lt.	W14x99	712.00'	695.00	17.00'	18.00'	18
49	210+72.52	11.09' Lt.	10.50' Lt.	W14x99	712.00'	695.00	17.00'	18.00'	–
50	210+79.46	11.08' Lt.	10.48' Lt.	W14x99	711.00	695.00	16.00	17.00'	–
					Total		1,138'	1,201	1,196

* Delete Shear Studs from flange adjacent to pier blockout, see elevations

BORING NUMBER	STATION	OFFSET	GROUND ELEV.	EST. COMP. ROCK ELEV.
B-1	205+62	20.1' LT	728	N/A
B-2	206+69	44.3' LT	728	N/A
B-3	207+60	36.1' LT	728	701.5
B-4	208+20	43.1' RT	695	693.5
B-5	209+64	59.9' RT	693	691.0
B-6	210+83	40.15' RT	696	693.0
B-7	212+10	37.74' RT	696	694.5
B-8	213+71	34.17' RT	698	691.5
B-9	211+98	31.8' LT	716	706.0
B-10	211+67	77.9' LT	720	710.0
B-11	212+57	61.6' LT	721	705.0
B-12	211+12	200.5' LT	736	714.0
B-13	212+13	155.2' LT	730	709.0
B-14	209+57	39.5' LT	730	705.0
B-15	208+63	54.3' LT	730	700.0

BILL OF MATERIAL

Cast-in-Place Concrete Face

Bar	No.	Size	Length	Shape
h	42	#5	22'-9"	———
h_1	133	#5	26'-4"	———
h_2	147	#5	23'-8"	———
h_3	13	#5	22'-0"	———
h_4	28	#5	23'-5"	———
h_5	13	#5	24'-8"	———
h_6	32	#5	6'-0"	———
v	192	#4	16'-8"	———
v_1	140	#4	15'-8"	———
v_2	50	#4	12'-8"	———
v_3	98	#4	10'-8"	———
v_4	243	#4	4'-8"	⊏⊐
v_5	6	#4	10'-3"	———
Concrete Structures			Cu. Yd.	182.4
Reinforcement Bars (Epoxy Coated)			Pound	15,325
Form Liner Textured Surface			Sq. Ft.	3,395
Rubbed Finish			Sq. Ft.	637
Staining Concrete Structures			Sq. Yd.	377
Anti-Grafitti Coating			Sq. Ft.	4,032

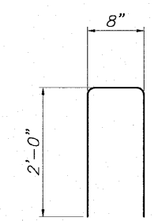

BAR v_4

SP WALL No. 21
PILE INFORMATION & C.I.P. BILL OF MATERIALS
PEDESTRIAN RIVERWALK
ALONG THE ROCK RIVER
WINNEBAGO COUNTY
SECTION NO. 06-00543-00-BT
STATION 208+13.27 TO
STATION 210+79.46

DESIGNED	CTB
CHECKED	AAG
DRAWN	JAW
CHECKED	JWH

McClure Engineering Associates, Inc.
7282 Argus Drive Rockford, Illinois 61107-5837
(815) 398-2332 Fax (815) 398-2496
Design Firm License: Illinois#184-000816

SHEET NO. 5
5 SHEETS

F.A. RTE.	SECTION	COUNTY	TOTAL SHEETS	SHEET NO.
	06-00543-00-BT	WINNEBAGO	148	89
		CONTRACT NO.		85521
FED. ROAD DIST. NO.	ILLINOIS	FED. AID PROJECT		

BENCHMARK

NO.	DESCRIPTION	ELEVATION
	North Bonnet Bolt on Fire Hydrant South Of Museum Entrance on the East side of N. Main Street	736.60

EXISTING STRUCTURE: None

Notes: Wall Offsets are Measured from the ℄ of the Pedestrian Walkway to the Back Face of the Cast-In-Place Portion of the Soldier Pile Wall.

S.P.R.W. = Soldier Pile Retaining Wall
C.I.P. = Cast-in-Place

STATE OF ILLINOIS

DEPARTMENT OF TRANSPORTATION

HIGHWAY CLASSIFICATION

Rockford Pedestrian Riverwalk
Functional Class: Pedestrian

DESIGN SPECIFICATIONS

2002 AASHTO
Standard Specifications – 17th Edition

DESIGN STRESSES

Field Units

f'c = 3,500 psi (Cast-In Place Concrete)
fy = 60,000 psi (Reinforcement)
fy = 50,000 psi (Soldier Pile Steel)

Precast Units

f'c = 5,000 psi (Precast Concrete)
fy = 60,000 psi (Reinforcement)

TOTAL BILL OF MATERIALS

SP WALL No. 22 AND LOOKOUT No. 3 SLAB

ITEM	UNITS	TOTAL
Structure Excavation	Cu. Yd.	10
Concrete Structures	Cu. Yd	23.0
Protective Coat	Sq. Yd.	25.0
Stud Shear Connectors	Each	96
Precast Concrete Lagging	Sq. Ft.	198
Furnishing Soldier Piles W14 X 109	Foot	114
Drilling and Setting Soldier Piles in Rock	Cu. Ft.	275
Drilling and Setting Soldier Piles in Soil	Cu. Ft.	72
Reinforcement Bars (Epoxy Coated)	Pound	3,350
Geocomposite Wall Drain	Sq. Yd.	12
Form Liner Textured Surface	Sq. Ft.	225
Rock Excavation for Structures, Special	Cu. Yd.	12
Rubbed Finish	Sq. Ft.	28
Staining Concrete Structures	Sq. Yd.	25
Anti-Grafitti Coating	Sq. Ft.	225

SCALES:

PLAN: 1" = 10'

PROFILE: 1" = 10' HORIZONTAL
1" = 10' VERTICAL

0 10 20
Scale in Feet

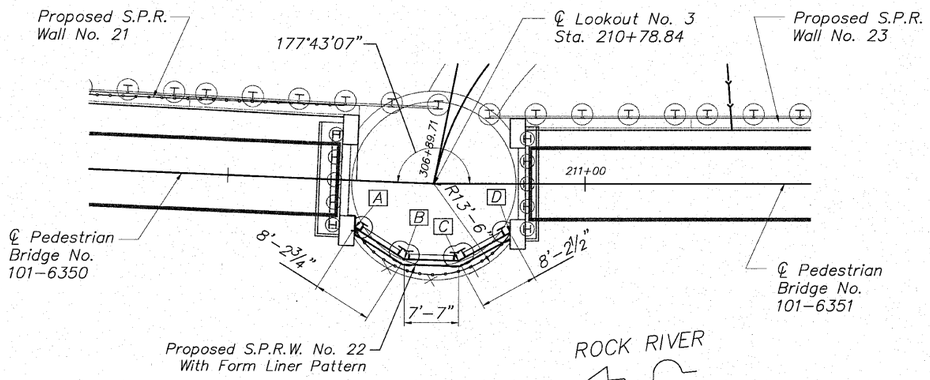

PLAN B-6

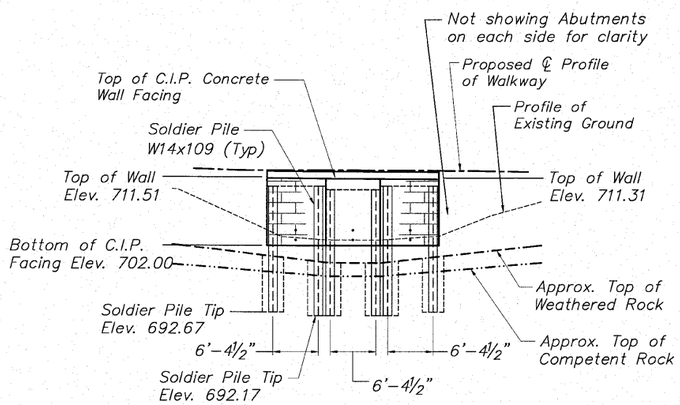

ELEVATION

GENERAL NOTES

1. It shall be the responsibility of the Contractor to verify all dimensions and conditions existing in the field prior to construction and ordering materials.
2. Reinforcement bars designated (E) shall be epoxy coated.
3. Reinforcement bars shall conform to the requirements of ASTM A706 Gr 60. See Special Provisions.
4. Reinforcing bars shall be lapped a minimum as shown on plans where splices occur. Radius bars shall be factory bent and delivered to the site with appropriate radius. Field bending will only be allowed to achieve form clearances.
5. Stud shear connectors shall be ¾" diameter x 4" granular or flux filled headed studs automatically end welded to the front flange in the field.
6. Protective coat shall be applied to all exposed surfaces of the wall and shall extend 1'-0" minimum below finished grade.
7. All construction joints shall be bonded.
8. The cost of cutting off any piling in excess of that needed shall be included in the cost of "Drilling and Setting Soldier Piles".
9. Drilling and Setting of Soldier Piles will require drilling through layers of sand and gravel. Refer to boring logs. The use of temporary drill casings or drilling slurry may be required to keep holes open prior to placement of concrete at no additional cost to the contract. Refer to Special Provisions for Drilling and Setting Soldier Piles.
10. The approximate embedment depth for the soldier pile tip is as provided on the plans and considers a penetration into competent rock of 5.5 feet (minimum) based on the soil boring information and uniaxial compressive rock strength value of 4,000 PSI (minimum) as provided by Terracon Consultants, Inc. The actual top of rock elevation, which qualifies as competent rock meeting the minimum requirements of the design, shall be determined and field verified by the Geotechnical Engineer during the drilling operation at each soldier pile location. Final pile tip elevations shall be a minimum of 5.5 feet below actual top of competent rock elevations.
11. All exposed edges shall have a ¾" x 45° chamfer, except as shown otherwise. Chamfers on vertical edges shall be continued a minimum of one foot below finished ground level.
12. Exposed surfaces of concrete shall be given a "rubbed finish" except where form liner is specified.
13. Contractor shall be responsible for dewatering in accordance with the erosion control plan at no additional cost to the contract.
14. Backfill behind wall shall be placed to the lines and grades as shown on the plans. The Contractor shall take care to ensure the use of suitable material and proper compaction of all fill areas. Compaction shall be performed with a loose thickness of no more than 8" and each lift shall be compacted to a density equal to or greater than 95% standard proctor maximum dry density (ASTM D-698) taking care not to over compact the soil directly behind the wall. Moisture shall be within -2 to +3 percent of optimum. No heavy equipment shall be allowed within 6 feet of the wall during backfilling and compaction. Compaction shall be by hand method, "walk behind", equipment in the areas within 6 feet of the face of the wall.
15. Backfill of wall behind precast panels must be completed before placement of cast-in-place concrete face. Refer to Pecast Panel Details sheet for additional notes.
16. Temporary Concrete will be removed in the future by "others". Install a bond breaker to allow removal without damaging the structural slab. Temporary Concrete will be paid as PCC Sidewalk, 6" and shall include payment for the bond breaker.

WALL INFORMATION CHART

Reference Point	Station to Back Face of C.I.P. Wall	Offset to Back Face of C.I.P Wall
A	210+68.02	6.62' Rt.
B	210+75.14	10.73' Rt.
C	210+82.30	10.81' Rt.
D	210+89.50	6.87' Rt.

MINIMUM BAR LAP

No. 4 bars 1'-8"
No. 5 bars 2'-2"
No. 6 bars 2'-7"

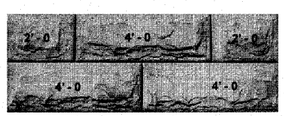

FORM LINER PATTERN

Milestone, Inc.
Pattern No. MS-1011
Weathered Limestone or Equal
(See Special Provisions)

INDEX OF WALL No. 22 SHEETS

Reviewed and Approved for Structural Adequacy Only

Todd C. Ude 9/1/2010

LICENSED STRUCTURAL ENGINEER TODD C. UDE 081-005784 EXP. 11/30/2010 STATE OF ILLINOIS

ALI A. GHARAMTI 081-005060 LICENSED STRUCTURAL ENGINEER OF MOLINE STATE OF ILLINOIS

Signature

Date 8/31/10

GENERAL PLAN & ELEVATION
SP WALL No. 22
PEDESTRIAN RIVERWALK
ALONG THE ROCK RIVER
WINNEBAGO COUNTY
SECTION NO. 06-00543-00-BT
STATION 210+67.98 TO STATION 210+89.50

DESIGNED	CTB
CHECKED	AAG
DRAWN	JAW
CHECKED	JWH

– 20

EXAMINED

ENGINEER OF BRIDGE DESIGN

PASSED

ENGINEER OF BRIDGES AND STRUCTURES

McClure Engineering Associates, Inc.
7282 Argus Drive Rockford, Illinois 61107-5837
(815) 398-2332 Fax (815) 398-2496
Design Firm License: Illinois#184-000816

SHEET NO. 1	F.A. RTE.	SECTION	COUNTY	TOTAL SHEETS	SHEET NO.
5 SHEETS		06-00543-00-BT	WINNEBAGO	148	90
			CONTRACT NO.		85521
	FED. ROAD DIST. NO.	ILLINOIS	FED. AID PROJECT		

STATE OF ILLINOIS

DEPARTMENT OF TRANSPORTATION

SCALES:

PLAN: 1"= 5'

PROFILE: 1" = 5' HORIZONTAL
1" = 5' VERTICAL

0 5 10
Scale in Feet

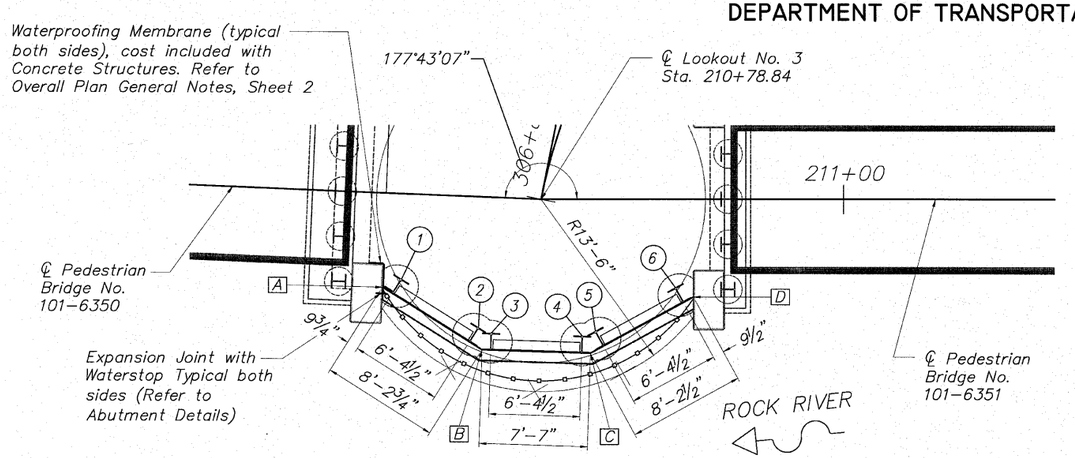

PLAN

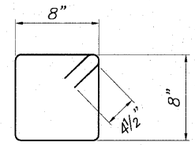

BAR s

BILL OF MATERIAL
Cast-in-Place Concrete

Bar	No.	Size	Length	Shape
h (E)	26	#5	8'-0"	———
h_1(E)	13	#5	7'-7"	———
s (E)	26	#4	3'-5"	
v (E)	26	#5	8'-11"	———
Concrete Structures			Cu. Yd.	6.8
Reinforcement Bars (Epoxy Coated)			Pound	535
Form Liner Textured Surface			Sq. Ft.	225
Staining Concrete Structures			Sq. Yd.	25
Anti-Grafitti Coating			Sq. Ft.	225
Rubbed Finish			Sq. Ft.	28

WALL INFORMATION CHART

Reference Point	Station to Back Face of Wall	Offset to Back Face of Wall
A	210+68.02	6.62' Rt.
B	210+75.14	10.73' Rt.
C	210+82.30	10.81' Rt.
D	210+89.50	6.87' Rt.

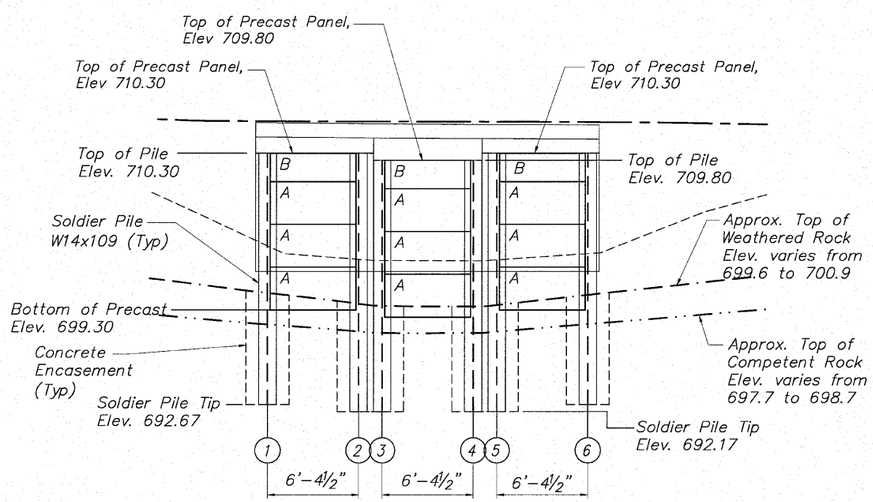

ELEVATION (Showing Precast Lagging)

(Looking @ Front Face of Wall)

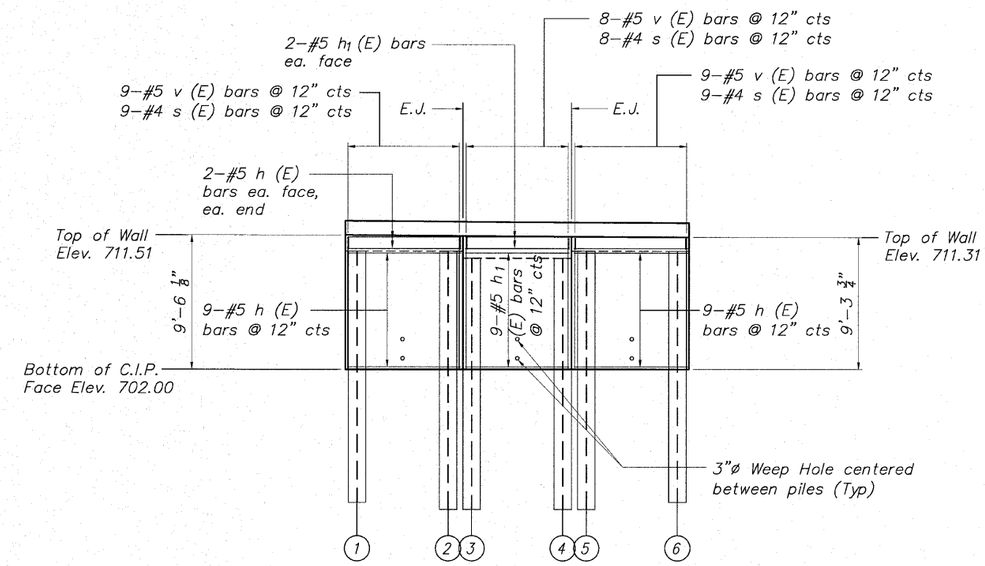

ELEVATION (Showing C.I.P. Facing Reinforcement)

(Looking @ Front Face of Wall)

SOLDIER PILE INFORMATION CHART

Reference Point	Station	Offset to ℄ of Hole	Offset to Center Front Flange of Pile	Pile Section	Top of Pile	Bottom of Pile	Finished Pile Length	Furnished Pile Length	No. Stud Shear Connectors
1	210+69.01	6.51' Rt.	7.03' Rt.	W14x109	710.30	692.67	17.63	19	16
2	210+74.53	9.70' Rt.	10.21' Rt.	W14x109	710.30	692.17	18.13	19	16
3	210+75.74	10.13' Rt.	10.72' Rt.	W14x109	709.80	692.17	17.63	19	16
4	210+81.71	10.20' Rt.	10.79' Rt.	W14x109	709.80	692.17	17.63	19	16
5	210+82.93	9.79' Rt.	10.31' Rt.	W14x109	710.30	692.17	18.13	19	16
6	210+88.52	6.73' Rt.	7.25' Rt.	W14x109	710.30	692.67	17.63	19	16
					Totals		107 Ft.	114 Ft.	96 Ea.

PRECAST PANEL SCHEDULE

PANEL	NOMINAL SIZE	No.	Sq. Ft. PANELS
A	3' x 6'	9	160.8
B	2' x 6'	3	35.6
Total			196.4

MINIMUM BAR LAP

No. 4 bars 1'-8"
No. 5 bars 2'-2"
No. 6 bars 2'-7"

SP WALL No. 22 DETAILS
PEDESTRIAN RIVERWALK
ALONG THE ROCK RIVER
WINNEBAGO COUNTY
SECTION NO. 06-00543-00-BT
STATION 210+67.98 TO STATION 210+89.50

DESIGNED	CTB
CHECKED	AAG
DRAWN	JAW
CHECKED	JWH

McClure Engineering Associates, Inc.
7282 Argus Drive
(815) 398-2332
Rockford, Illinois 61107-5837
Fax (815) 398-2496
Design Firm License: Illinois#184-000816

SHEET NO. 2

5 SHEETS

F.A. RTE.	SECTION	COUNTY	TOTAL SHEETS	SHEET NO.
	06-00543-00-BT	WINNEBAGO	148	91
		CONTRACT NO.		85521
FED. ROAD DIST. NO.	ILLINOIS	FED. AID PROJECT		

STATE OF ILLINOIS
DEPARTMENT OF TRANSPORTATION

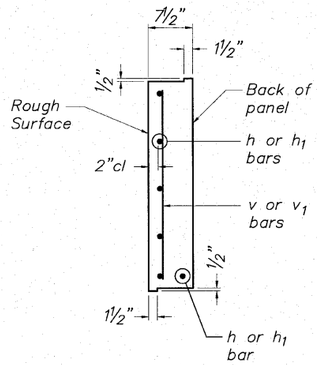

TYPICAL PANEL END VIEW

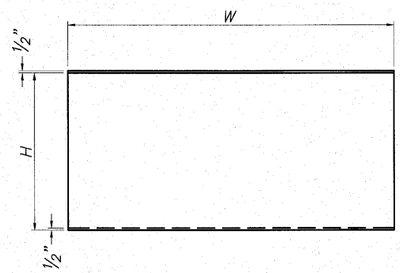

TYPICAL PANEL ELEVATION

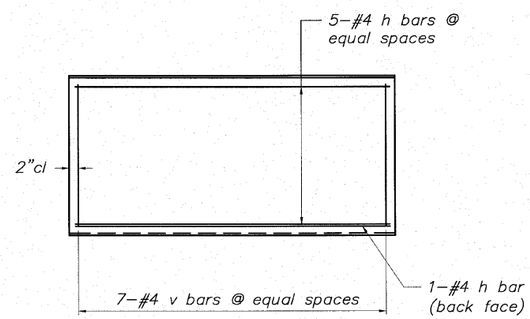

PANEL A REINFORCEMENT

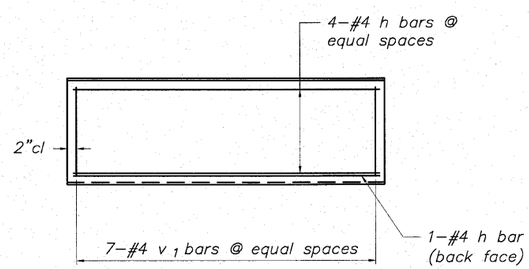

PANEL B REINFORCEMENT

PRECAST CONCRETE LAGGING PANEL DETAILS

NOTES:

1. Precast Concrete Lagging shall be labeled "front" (river side) or "back" (embankment side) at the time of casting by the manufacturer.
2. Precast Panels shall meet the requirements of Section 1042 of the Standard Specifications and shall be paid for at the contract unit price per square foot foot for Precast Concrete Lagging.
3. Contractor to backfill wall as precast panels are installed or provide blocking detail to Engineer for approval at no additional cost to the contract.

*BILL OF MATERIAL

ONE PANEL A

Bar	No.	Size	Length	Shape
h	6	#4	5'–8"	——
v	7	#4	2'–8"	——
Concrete Structures			Cu. Yd.	0.41
Reinforcement Bars			Pound	35.2
Panel Area			Sq. Ft.	17.87

*BILL OF MATERIAL

ONE PANEL B

Bar	No.	Size	Length	Shape
h	5	#4	5'–8"	——
v 1	7	#4	1'–8"	——
Concrete Structures			Cu. Yd.	0.27
Reinforcement Bars			Pound	26.7
Panel Area			Sq. Ft.	11.87

* Concrete and reinforcement quantities are given for information only. Concrete and reinforcement for panels are included in the pay item "Precast Concrete lagging".

PANEL SCHEDULE

PANEL	H	W
A	2'–11¾"	6'–0"
B	1'–11¾"	6'–0"

BORING NUMBER	STATION	OFFSET	GROUND ELEV.	EST. COMP. ROCK ELEV.
B-1	205+62	20.1' LT	728	N/A
B-2	206+69	44.3' LT	728	N/A
B-3	207+60	36.1' LT	728	701.5
B-4	208+20	43.1' RT	695	693.5
B-5	209+64	59.9' RT	693	691.0
B-6	210+83	40.15' RT	696	693.0
B-7	212+10	37.74' RT	696	694.5
B-8	213+71	34.17' RT	698	691.5
B-9	211+98	31.8' LT	716	706.0
B-10	211+67	77.9' LT	720	710.0
B-11	212+57	61.6' LT	721	705.0
B-12	211+12	200.5' LT	736	714.0
B-13	212+13	155.2' LT	730	709.0
B-14	209+57	39.5' LT	730	705.0
B-15	208+63	54.3' LT	730	700.0

SP WALL No. 22 DETAILS
PRECAST PANEL DETAILS
PEDESTRIAN RIVERWALK
ALONG THE ROCK RIVER
WINNEBAGO COUNTY
SECTION NO. 06–00543–00–BT
STATION 210+67.98 TO
STATION 210+89.50

DESIGNED	CTB
CHECKED	AAG
DRAWN	JAW
CHECKED	JWH

McClure Engineering Associates, Inc.
7282 Argus Drive (815) 398-2332
Rockford, Illinois 61107-5837 Fax (815) 398-2496
Design Firm License: Illinois#184-000816

SHEET NO. 3
5 SHEETS

F.A. RTE.	SECTION	COUNTY	TOTAL SHEETS	SHEET NO.
	06-00543-00-BT	WINNEBAGO	148	92
		CONTRACT NO.		85521
FED. ROAD DIST. NO.	ILLINOIS	FED. AID PROJECT		

STATE OF ILLINOIS
DEPARTMENT OF TRANSPORTATION

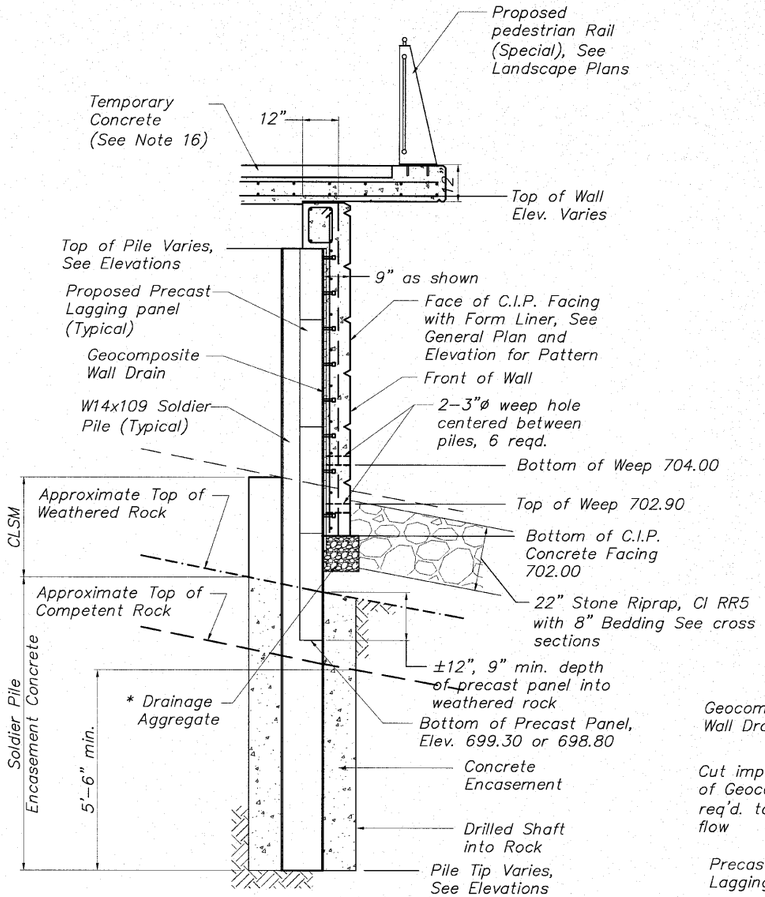

TYPICAL WALL SECTION
Showing Reinforcement

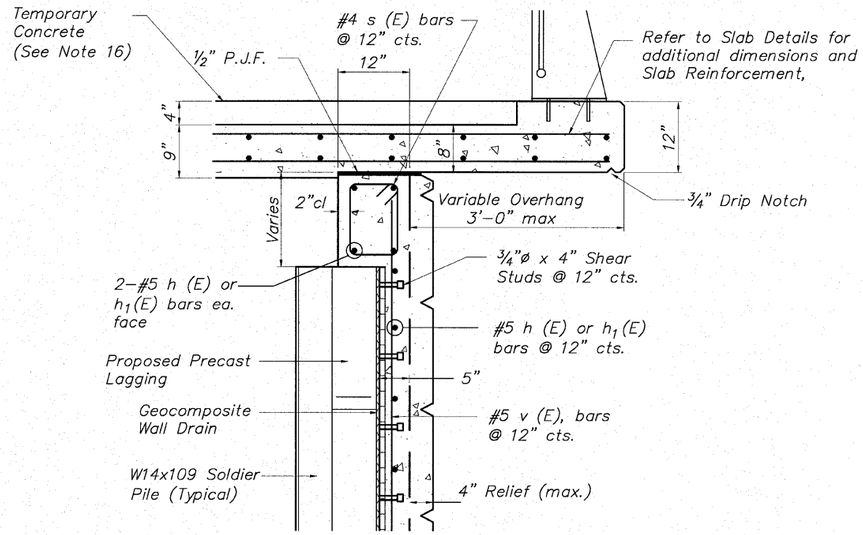

TYPICAL WALL SECTION
Showing Reinforcement

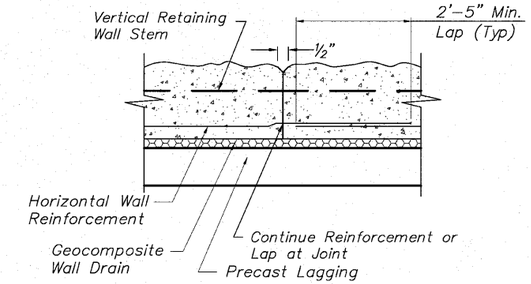

PLAN VIEW

TYPICAL CONSTRUCTION JOINT DETAIL
No Scale

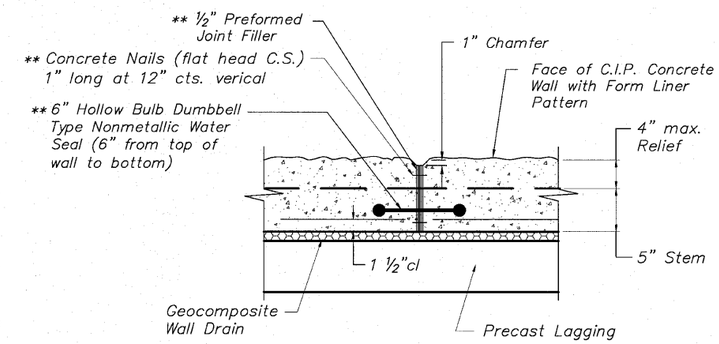

PLAN VIEW
Space Expansion Joints as Shown on Elevation
** Cost included with Concrete Structures

TYPICAL EXPANSION JOINT DETAIL
NO SCALE

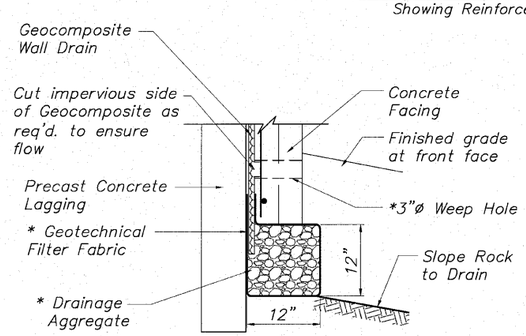

BETWEEN SOLDIER PILES

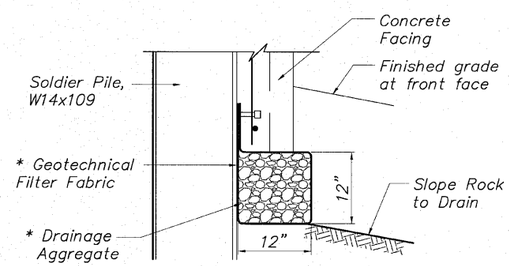

AT SOLDIER PILES

* Included in the cost of Concrete Structures

DRAINAGE AGGREGATE DETAIL

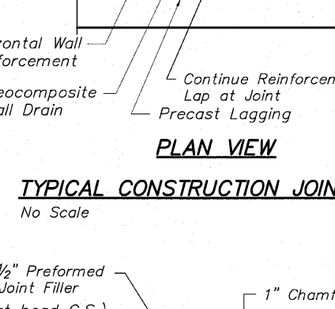

TYPICAL PILE ENCASEMENT SECTION
No Scale

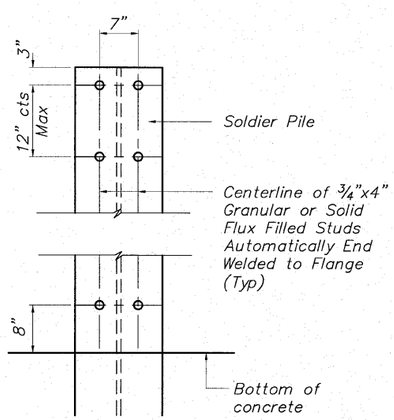

STUD SHEAR CONNECTOR LAYOUT

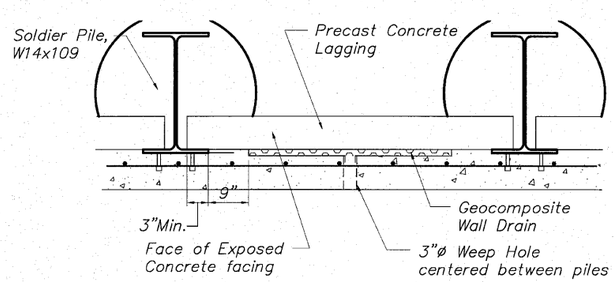

GEOCOMPOSITE WALL DRAIN DETAIL

MINIMUM BAR LAP

No. 4 bars	1'-8"
No. 5 bars	2'-2"
No. 6 bars	2'-7"

SP WALL No. 22 DETAILS
PEDESTRIAN RIVERWALK ALONG THE ROCK RIVER
WINNEBAGO COUNTY
SECTION NO. 06-00543-00-BT
STATION 210+67.98 TO STATION 210+89.50

DESIGNED	CTB
CHECKED	AAG
DRAWN	JAW
CHECKED	JWH

McClure Engineering Associates, Inc.
7282 Argus Drive (815) 398-2332
Rockford, Illinois 61107-5837 Fax (815) 398-2496
Design Firm License: Illinois#184-000816

SHEET NO. 4
5 SHEETS

F.A. RTE.	SECTION	COUNTY	TOTAL SHEETS	SHEET NO.
	06-00543-00-BT	WINNEBAGO	148	93
		CONTRACT NO.		85521
FED. ROAD DIST. NO.	ILLINOIS	FED. AID PROJECT		

STATE OF ILLINOIS

DEPARTMENT OF TRANSPORTATION

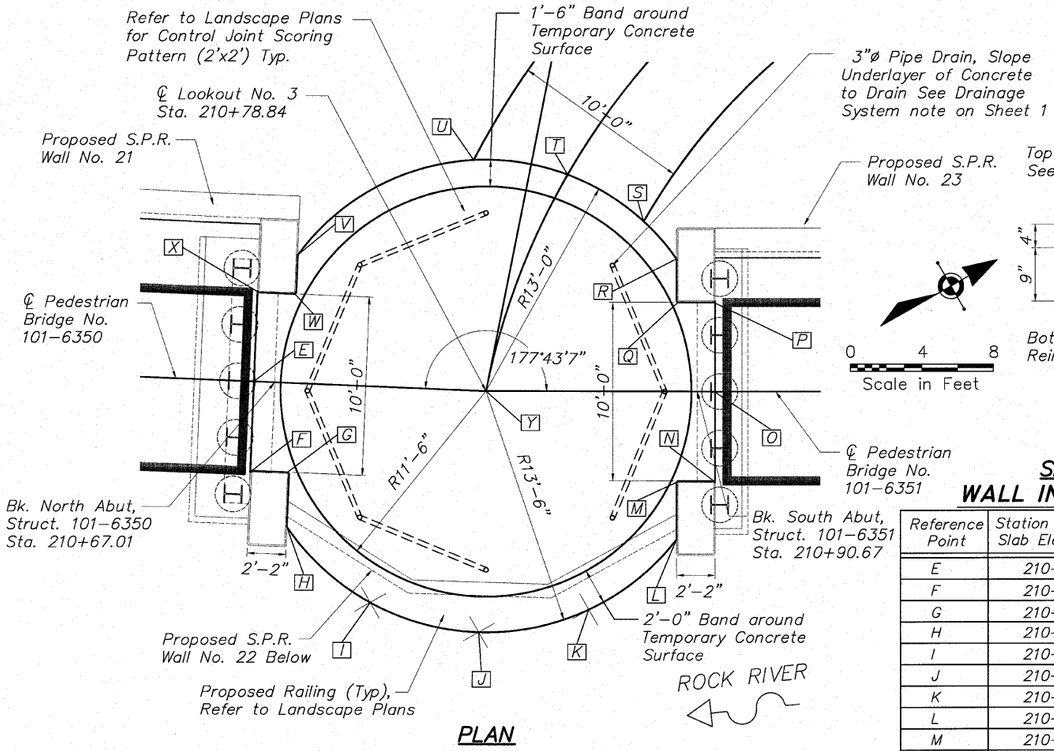

PLAN

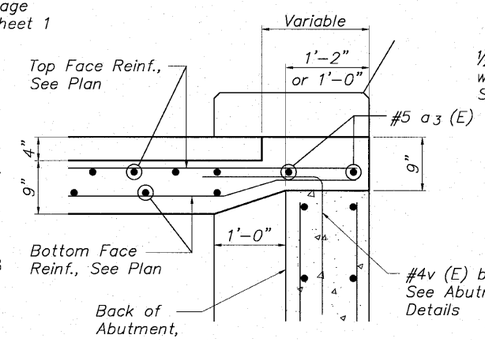

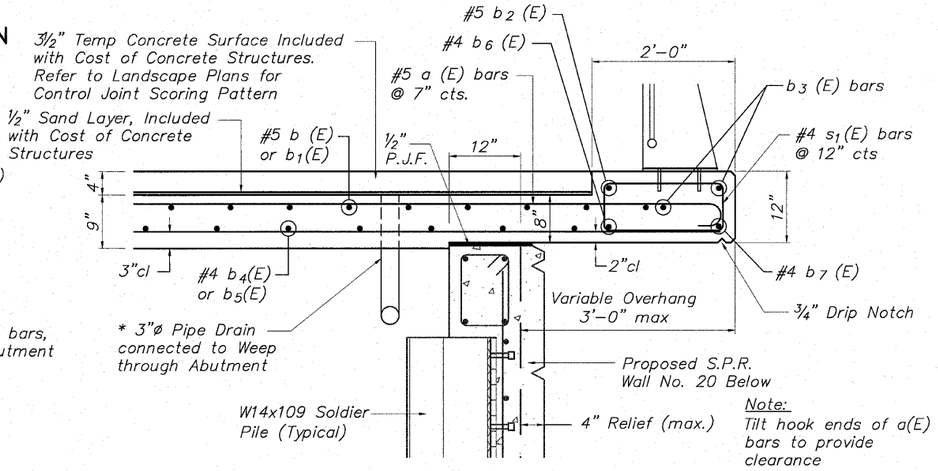

SECTION AT SOLDIER PILE WALL

SECTION AT BRIDGE ABUTMENT

WALL INFORMATION CHART

Reference Point	Station to Top of Slab Elevation Pt.	Offset to Top of Slab Elevation Pt.	Elevation	Reference Point	Station to Top of Slab Elevation Pt.	Offset to Top of Slab Elevation Pt.	Elevation
E	210+65.84	0.00' Rt.	712.61	O	210+91.67	0.00' Rt.	712.44
F	210+65.84	5.00' Rt.	712.56	P	210+91.67	5.00 Lt.	712.49
G	210+68.01	5.00' Rt.	712.54	Q	210+89.58	5.00' Lt.	712.51
H	210+68.01	8.06' Rt.	712.51	R	210+89.50	7.44' Lt.	712.54
I	210+72.84	12.09' Rt.	712.44	S	210+87.67	9.55' Lt.	712.58
J	210+78.84	13.50' Rt.	712.38	T	210+83.41	12.17' Lt.	712.64
K	210+84.59	12.21' Rt.	712.31	U	210+77.64	12.94' Lt.	712.65
L	210+89.50	8.28' Rt.	712.31	V	210+68.01	7.19' Lt.	712.66
M	210+89.58	5.00' Rt.	712.37	W	210+68.01	5.00' Lt.	712.64
N	210+91.67	5.00' Rt.	712.39	X	210+65.84	5.00' Lt.	712.66
				Y	210+78.84	0.00' Lt.	712.52

BILL OF MATERIAL

LOOKOUT No. 3 SLAB

Bar	No.	Size	Length	Shape
a (E)	37	#5	14'-9"	
a1(E)	11	#5	14'-2"	
a2(E)	8	#5	10'-8"	
a3(E)	4	#5	9'-8"	
a4(E)	26	#4	14'-9"	
a5(E)	16	#4	12'-9"	
b (E)	24	#5	13'-11"	
b1(E)	33	#5	11'-9"	
b2(E)	2	#5	30'-9"	R11'-8"
b3(E)	2	#5	25'-0"	R13'-4"
b4(E)	20	#4	13'-8"	
b5(E)	28	#4	12'-5"	
b6(E)	2	#4	31'-0"	R11'-8"
b7(E)	1	#4	25'-0"	R12'-9"
b8(E)	2	#5	24'-9"	R12'-9"
b9(E)	1	#4	25'-2"	R12'-9"
s1(E)	25	#4	4'-5"	
s2(E)	26	#4	5'-5"	
Concrete Structures			Cu. Yd.	16.2
Reinforcement Bars (Epoxy Coated)			Pound	2,815

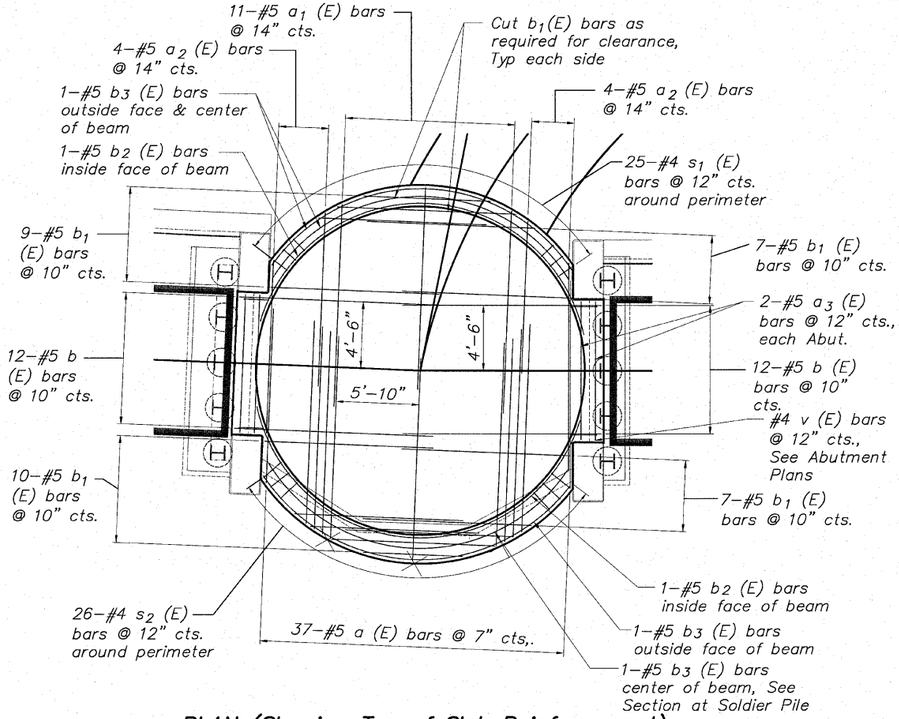

PLAN (Showing Top of Slab Reinforcement)

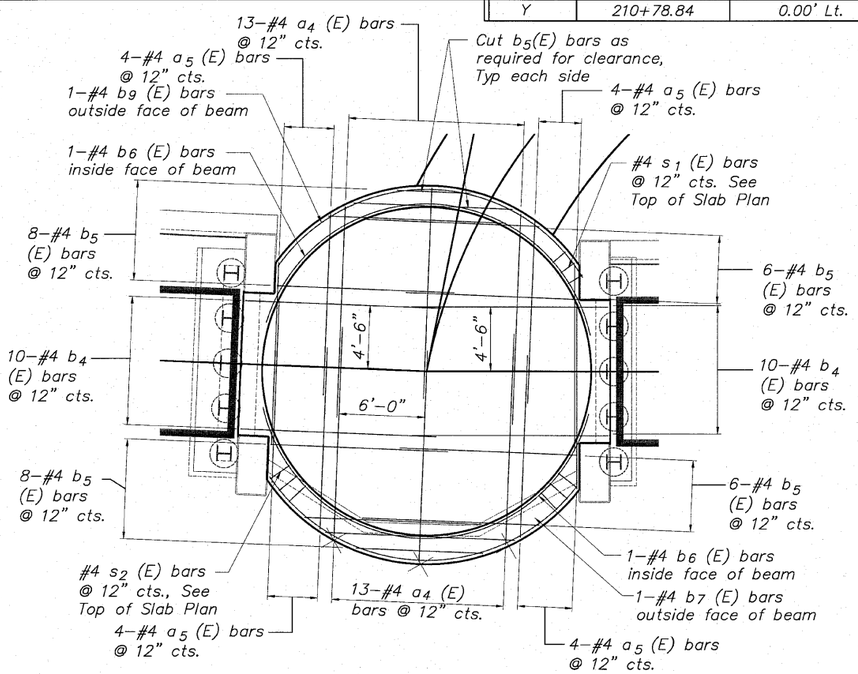

PLAN (Showing Bottom of Slab Reinforcement)

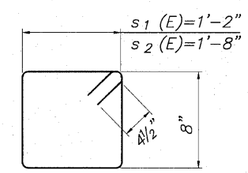

BAR s1(E)

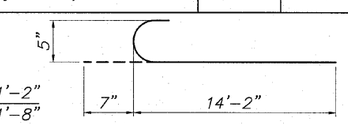

BAR a (E)

SLAB DETAILS LOOKOUT No. 3
PEDESTRIAN RIVERWALK
ALONG THE ROCK RIVER
WINNEBAGO COUNTY
SECTION NO. 06-00543-00-BT
STATION 210+78.84

DESIGNED	CTB
CHECKED	AAG
DRAWN	JAW
CHECKED	JWH

McClure Engineering Associates, Inc.
7282 Argus Drive Rockford, Illinois 61107-5837
(815) 398-2332 Fax (815) 398-2496
Design Firm License: Illinois#184-000816

SHEET NO. 5

5 SHEETS

F.A. RTE.	SECTION	COUNTY	TOTAL SHEETS	SHEET NO.
	06-00543-00-BT	WINNEBAGO	148	94
		CONTRACT NO.		85521
FED. ROAD DIST. NO.	ILLINOIS	FED. AID PROJECT		

BENCHMARK

NO.	DESCRIPTION	ELEVATION
	North Bonnet Bolt on Fire Hydrant South Of Museum Entrance on the East side of N. Main Street	736.60

EXISTING STRUCTURE: None

Notes: Wall Offsets are Measured from the ℄ of the Pedestrian Walkway to the Front Face of the Soldier Pile Wall.

S.P.R.W. = Soldier Pile Retaining Wall
C.I.P. = Cast in Place

STATE OF ILLINOIS
DEPARTMENT OF TRANSPORTATION

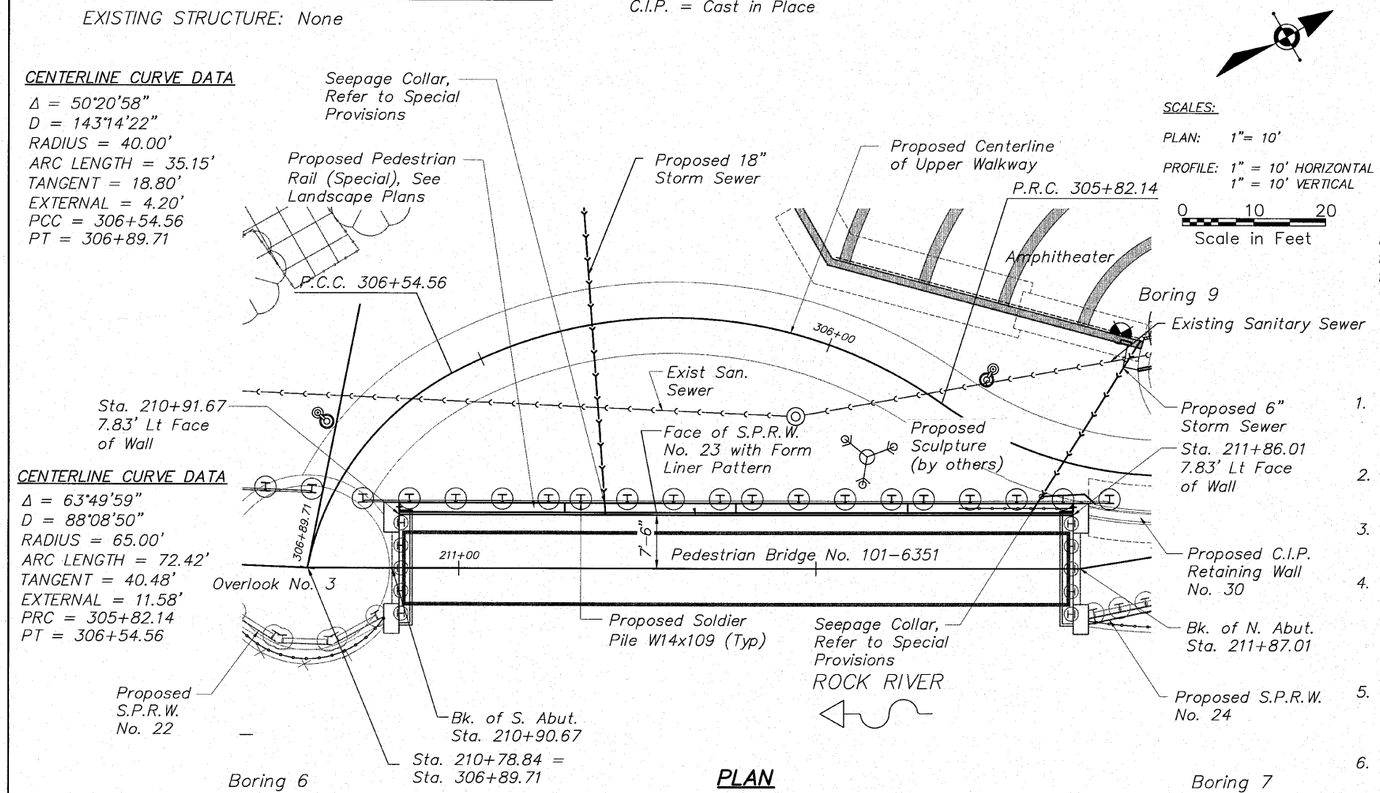

PLAN

SCALES:
PLAN: 1"= 10'
PROFILE: 1" = 10' HORIZONTAL
1" = 10' VERTICAL
0 10 20
Scale in Feet

HIGHWAY CLASSIFICATION
Rockford Pedestrian Riverwalk
Functional Class: Pedestrian

DESIGN SPECIFICATIONS
2002 AASHTO
Standard Specifications – 17th Edition

DESIGN STRESSES
Field Units
f'c = 3,500 psi (Cast-In Place Concrete)
fy = 60,000 psi (Reinforcement)
fy = 50,000 psi (Soldier Pile Steel)

TOTAL BILL OF MATERIALS

SP WALL No. 23

ITEM	UNITS	TOTAL
Structure Excavation	Cu. Yd.	90
Concrete Structures	Cu. Yd	56.3
Protective Coat	Sq. Yd.	138
Stud Shear Connectors	Each	332
Untreated Timber Lagging	Sq. Ft.	863
Furnishing Soldier Piles (W Section)	Foot	343
Drilling and Setting Soldier Piles in Rock	Cu. Ft.	958
Drilling and Setting Soldier Piles in Soil	Cu. Ft.	738
Reinforcement Bars (Epoxy Coated)	Pound	5,355
Geocomposite Wall Drain	Sq. Yd.	59
Rock Excavation for Structures, Special	Cu. Yd.	21.8
Form Liner Textured Surface	Sq. Ft.	990
Rubbed Finish	Sq. Ft.	252
Staining Concrete Structures	Sq. Yd.	110
Anti-Grafitti Coating	Sq. Ft.	990

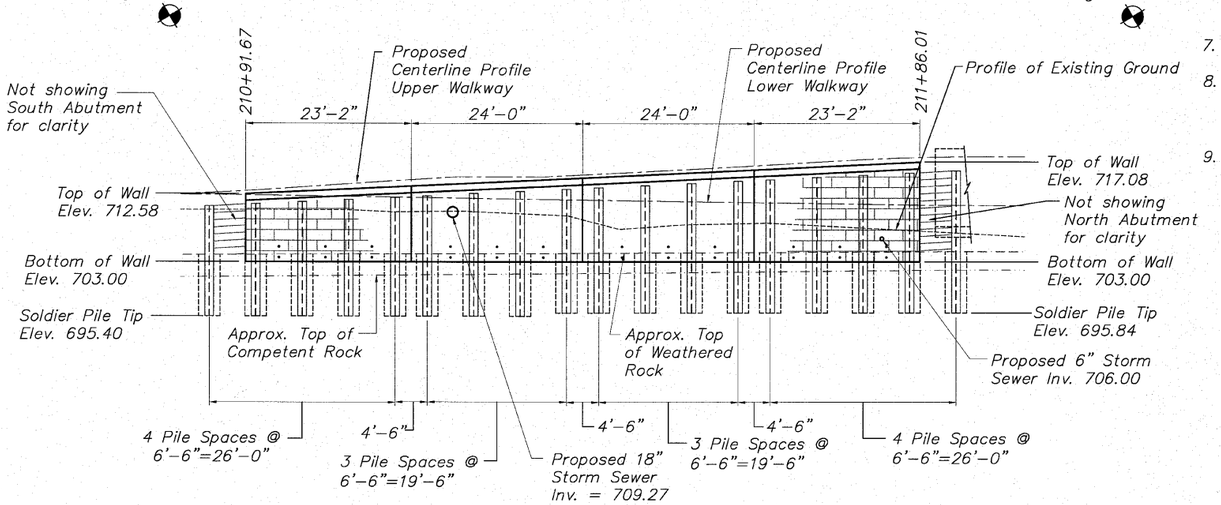

ELEVATION

GENERAL NOTES

1. It shall be the responsibility of the Contractor to verify all dimensions and conditions existing in the field prior to construction and ordering materials.
2. Reinforcement bars designated (E) shall be epoxy coated.
3. Reinforcement bars shall conform to the requirements of ASTM A706 Gr 60. See Special Provisions.
4. Reinforcing bars shall be lapped a minimum as shown on plans where splices occur. Radius bars shall be factory bent and delivered to the site with appropriate radius. Field bending will only be allowed to achieve form clearances.
5. Stud shear connectors shall be ¾" diameter x 6" granular or flux filled headed studs automatically end welded to the front flange in the field.
6. Protective coat shall be applied to all exposed surfaces of the wall and shall extend 1'-0" minimum below finished grade.
7. All construction joints shall be bonded.
8. The cost of cutting off any piling in excess of that needed shall be included in the cost of "Drilling and Setting Soldier Piles".
9. Drilling and setting of soldier piles will require drilling through layers of sand and gravel. Refer to boring logs. The use of temporary drill casings or drilling slurry may be required to keep holes open prior to placement of concrete at no additional cost to the contract. Refer to Special Provisions for Drilling and Setting Soldier Piles.
10. The approximate embedment depth for the soldier pile tip is as provided on the plans and considers a penetration into competent rock of 5.5 feet (minimum) based on the soil boring information and uniaxial compressive rock strength value of 4,000 PSI (minimum) as provided by Terracon Consultants, Inc. The actual top of rock elevation, which qualifies as competent rock meeting the minimum requirements of the design, shall be determined and field verified by the geotechnical engineer during the drilling operation at each soldier pile location. Final pile tip elevations shall be a minimum of 5.5 feet below actual top of competent rock elevations.
11. All exposed edges shall have a ¾" x 45° chamfer, except as shown otherwise. Chamfers on vertical edges shall be continued a minimum of one foot below finished ground level.
12. Exposed surfaces of concrete shall be given a "rubbed finish" except where form liner is specified.
13. Contractor shall be responsible for dewatering in accordance with the erosion control plan at no additional cost to the contract.
14. Backfill behind wall shall be placed to the lines and grades as shown on the plans. The Contractor shall take care to ensure the use of suitable material and proper compaction of all fill areas. Compaction shall be performed with a loose thickness of no more than 8" and each lift shall be compacted to a density equal to or greater than 95% standard proctor maximum dry density (ASTM D-698) taking care not to over compact the soil directly behind the wall. Moisture shall be within -2 to +3 percent of optimum. No heavy equipment shall be allowed within 6 feet of the wall during backfilling and compaction. Compaction shall e by hand method, "walk behind", equipment in the areas within 6 feet of the face of the wall.
15. The Contractor is responsible for the design and performance of the lagging using no less than a 3" nominal rough-sawn thickness and timber with allowable bending stress of 1000 psi.

INDEX OF WALL No. 23 SHEETS

Reviewed and Approved for Structural Adequacy Only

Todd C. Ude
9/1/2010

LICENSED STRUCTURAL ENGINEER TODD C. UDE 081-005764 EXP. 11/30/2010 STATE OF ILLINOIS

ALI A. GHARAMTI 081-005060 LICENSED STRUCTURAL ENGINEER OF MOLINE STATE OF ILLINOIS

Signature

Date 8/31/10

Milestone, Inc.
Pattern No. MS-1011
Weathered Limestone or Equal
(See Special Provisions)

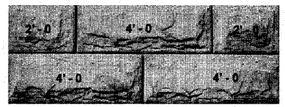

FORM LINER PATTERN

GENERAL PLAN & ELEVATION
SP WALL No. 23
PEDESTRIAN RIVERWALK ALONG THE ROCK RIVER
WINNEBAGO COUNTY
SECTION NO. 06-00543-00-BT
STATION 210+86.59 TO STATION 211+92.60

DESIGNED	CTB
CHECKED	AAG
DRAWN	JAW
CHECKED	JWH

— 20
EXAMINED
ENGINEER OF BRIDGE DESIGN
PASSED
ENGINEER OF BRIDGES AND STRUCTURES

McClure Engineering Associates, Inc.
7282 Argus Drive Rockford, Illinois 61107-5837
(815) 398-2332 Fax (815) 398-2496
Design Firm License: Illinois#184-000816

SHEET NO. 1
4 SHEETS

F.A. RTE.	SECTION	COUNTY	TOTAL SHEETS	SHEET NO.
	06-00543-00-BT	WINNEBAGO	148	95
		CONTRACT NO.		85521
FED. ROAD DIST. NO.	ILLINOIS	FED. AID PROJECT		

STATE OF ILLINOIS
DEPARTMENT OF TRANSPORTATION

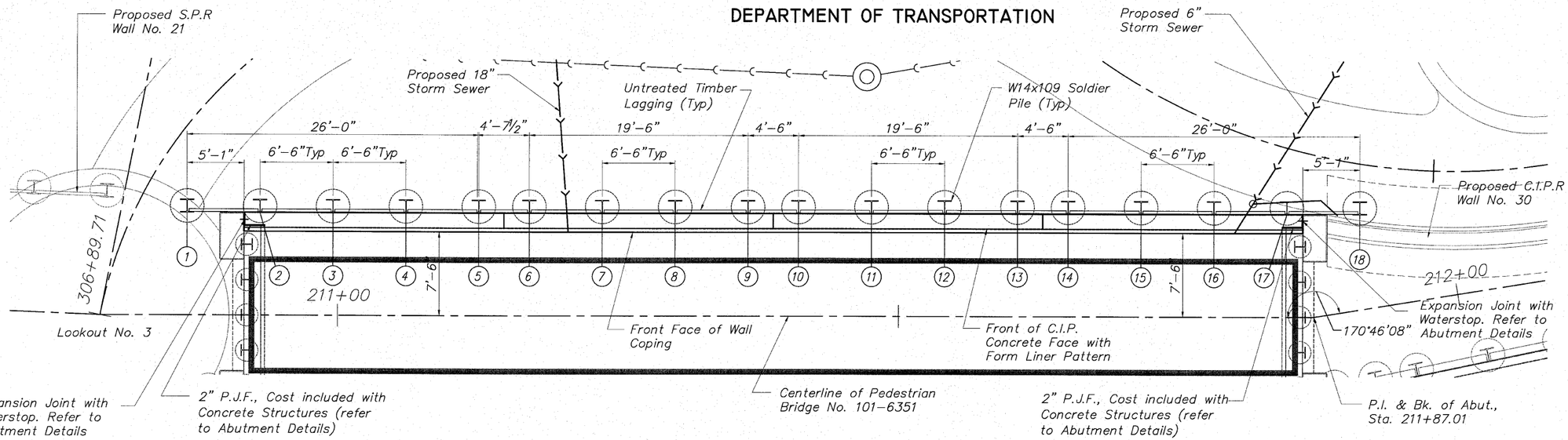

PLAN

SCALES:
PLAN: 1" = 5'
PROFILE: 1" = 5' HORIZONTAL
1" = 5' VERTICAL
0 5 10
Scale in Feet

Construction Note:
Piles 1 and 18 have been extended beyond the limits of the CIP concrete wall facing for the benefit of providing temporary shoring for the excavation and construction of the bridge abutments. Contractor shall be responsible for additional slope protection beyond at no additional cost to the contract. Contractor shall coordinate top of Pile 18 elevation with CIP Wall 30 footing. If applicable, removal of top portion shall be done without damage to adjacent work. This work shall be included with the cost of Concrete Structures.

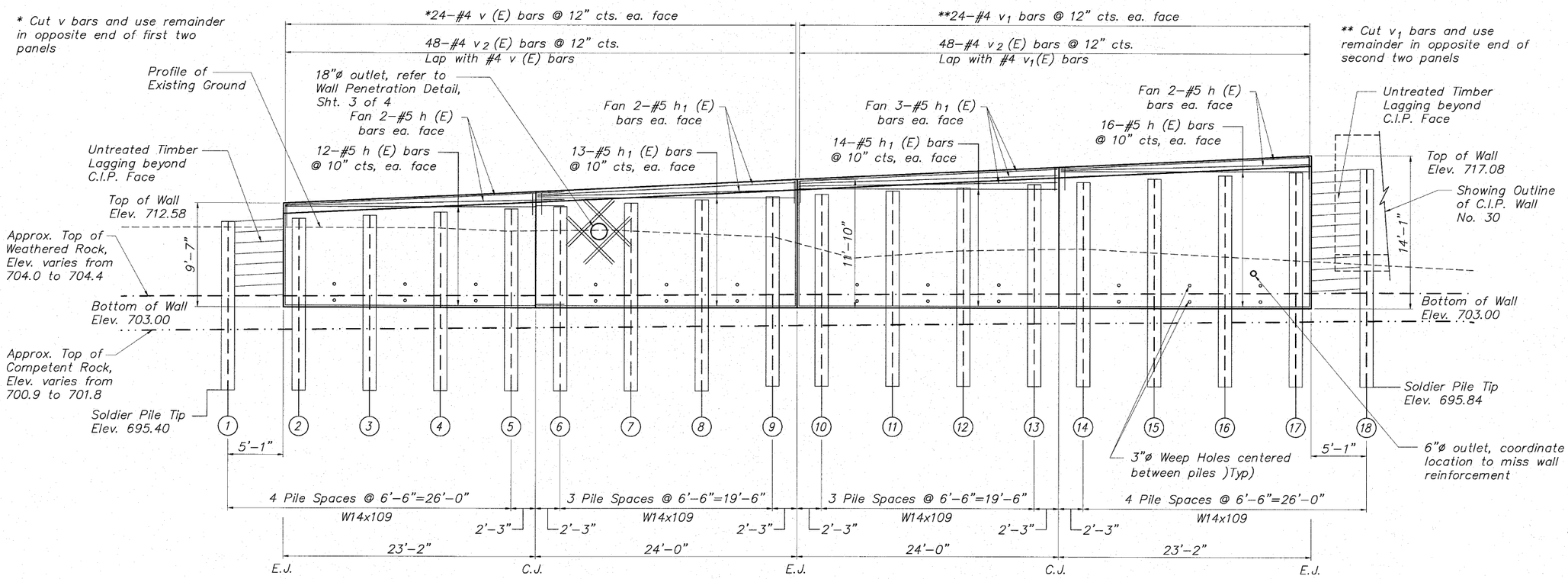

ELEVATION (Showing Reinforcement)

(Looking @ Front Face of Wall)

SEE NEXT SHEET FOR C.I.P. CONCRETE BILL OF MATERIALS

MINIMUM BAR LAP

No. 4 bars	1'-8"
No. 5 bars	2'-2"
No. 6 bars	2'-7"

SP WALL No. 23 DETAILS
PEDESTRIAN RIVERWALK
ALONG THE ROCK RIVER
WINNEBAGO COUNTY
SECTION NO. 06-00543-00-BT
STATION 210+86.59 TO
STATION 211+92.60

DESIGNED	CTB
CHECKED	AAC
DRAWN	JAW
CHECKED	JWH

McClure Engineering Associates, Inc.
7282 Argus Drive Rockford, Illinois 61107-5837
(815) 398-2332 Fax (815) 398-2496
Design Firm License: Illinois#184-000816

SHEET NO. 2
4 SHEETS

F.A. RTE.	SECTION	COUNTY	TOTAL SHEETS	SHEET NO.
	06-00543-00-BT	WINNEBAGO	148	96
		CONTRACT NO.		85521
FED. ROAD DIST. NO.	ILLINOIS	FED. AID PROJECT		

STATE OF ILLINOIS

DEPARTMENT OF TRANSPORTATION

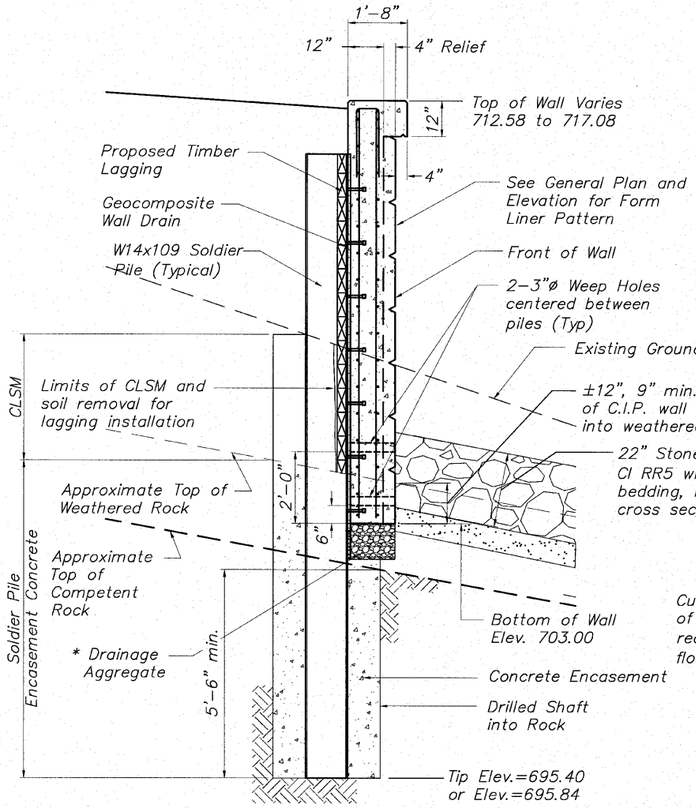

TYPICAL WALL SECTION

Showing Reinforcement

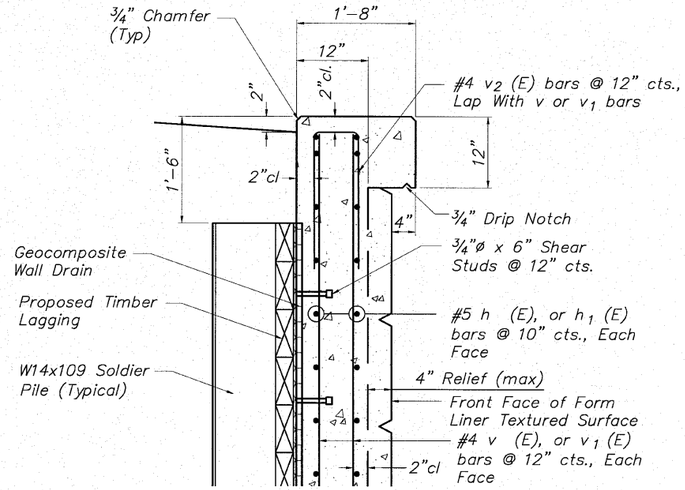

TYPICAL WALL SECTION

Showing Reinforcement

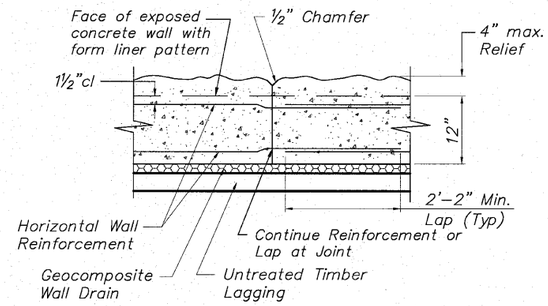

PLAN VIEW

TYPICAL CONSTRUCTION JOINT DETAIL

No Scale

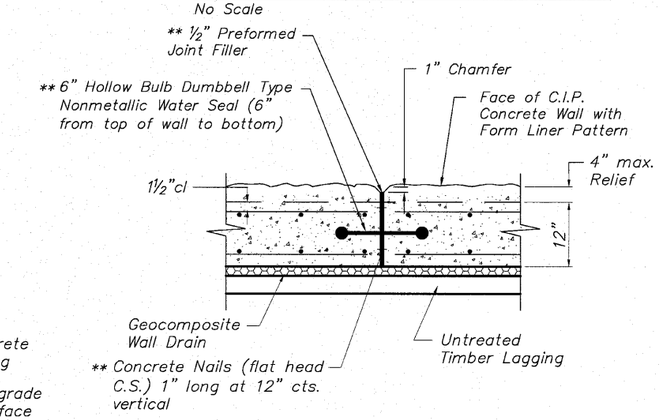

PLAN VIEW

Space Expansion Joints as Shown on Elevation

** Cost included with Concrete Structures

TYPICAL EXPANSION JOINT DETAIL

No Scale

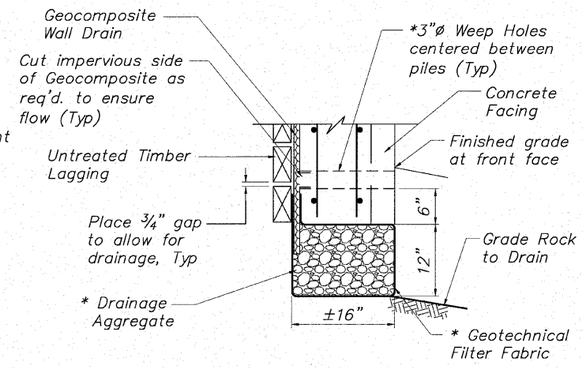

BETWEEN SOLDIER PILES

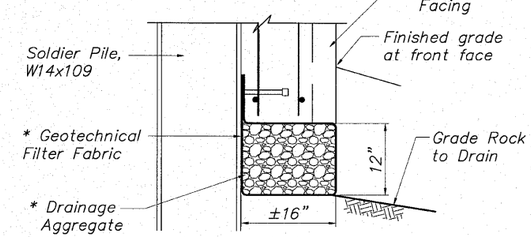

AT SOLDIER PILES

* Included in the cost for Concrete Structures

DRAINAGE AGGREGATE DETAIL

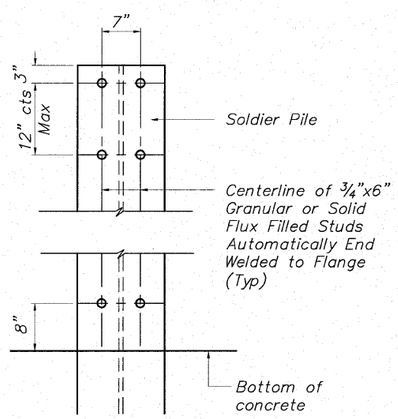

STUD SHEAR CONNECTOR LAYOUT

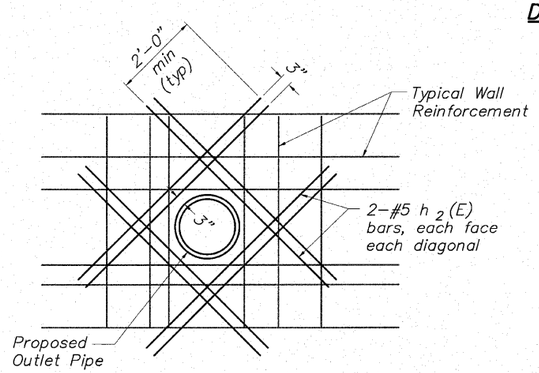

Move horizontal and vertical wall reinforcement up to one half their bar spacing to miss wall opening

WALL PENETRATION DETAIL

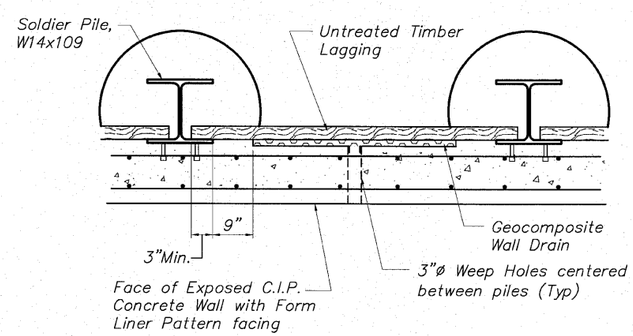

GEOCOMPOSITE WALL DRAIN DETAIL

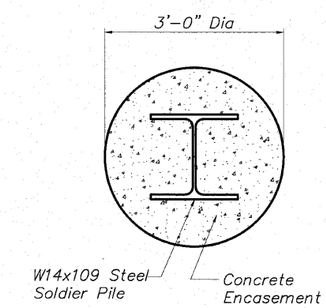

TYPICAL PILE ENCASEMENT SECTION

No Scale

SP WALL No. 23 DETAILS
PEDESTRIAN RIVERWALK
ALONG THE ROCK RIVER
WINNEBAGO COUNTY
SECTION NO. 06-00543-00-BT
STATION 210+86.59 TO
STATION 211+92.60

DESIGNED	CTB
CHECKED	AAG
DRAWN	JAW
CHECKED	JWH

McClure Engineering Associates, Inc.
7282 Argus Drive (815) 398-2332
Rockford, Illinois 61107-5837 Fax (815) 398-2496
Design Firm License: Illinois#184-000816

SHEET NO. 3

4 SHEETS

F.A. RTE.	SECTION	COUNTY	TOTAL SHEETS	SHEET NO.
	06-00543-00-BT	WINNEBAGO	148	97
		CONTRACT NO.		85521
FED. ROAD DIST. NO.	ILLINOIS	FED. AID PROJECT		

STATE OF ILLINOIS
DEPARTMENT OF TRANSPORTATION

SOLDIER PILE INFORMATION CHART

Reference Point	Station	Offset to ℄ of Hole	Offset to Center Front Flange of Pile	Pile Section	Top of Pile	Bottom of Pile	Finished Pile Length	Furnished Pile Length	No. Stud Shear Connectors
1	210+86.59	9.76' Lt.	9.17' Lt.	W14x109	710.86	695.40	15.46	17	–
2	210+93.09	9.76' Lt.	9.17' Lt.	W14x109	711.17	695.40	15.77	17	16
3	210+99.59	9.76' Lt.	9.17' Lt.	W14x109	711.48	695.40	16.08	17	16
4	211+06.09	9.76' Lt.	9.17' Lt.	W14x109	711.79	695.40	16.39	18	18
5	211+12.59	9.76' Lt.	9.17' Lt.	W14x109	712.10	695.40	16.70	18	18
6	211+17.09	9.76' Lt.	9.17' Lt.	W14x109	712.31	695.40	16.91	18	18
7	211+23.59	9.76' Lt.	9.17' Lt.	W14x109	712.64	695.40	17.24	19	20
8	211+30.09	9.76' Lt.	9.17' Lt.	W14x109	712.95	695.40	17.55	19	20
9	211+36.59	9.76' Lt.	9.17' Lt.	W14x109	713.24	695.84	17.40	19	20
10	211+41.09	9.76' Lt.	9.17' Lt.	W14x109	713.46	695.84	17.62	19	22
11	211+47.59	9.76' Lt.	9.17' Lt.	W14x109	713.77	695.84	17.93	19	22
12	211+54.09	9.76' Lt.	9.17' Lt.	W14x109	714.08	695.84	18.24	20	22
13	211+60.59	9.76' Lt.	9.17' Lt.	W14x109	714.39	695.84	18.55	20	24
14	211+65.09	9.76' Lt.	9.17' Lt.	W14x109	714.60	695.84	18.76	20	24
15	211+71.59	9.76' Lt.	9.17' Lt.	W14x109	714.91	695.84	19.07	20	24
16	211+78.09	9.76' Lt.	9.17' Lt.	W14x109	715.22	695.84	19.38	21	24
17	211+84.59	9.76' Lt.	9.17' Lt.	W14x109	715.53	695.84	19.69	21	24
18	211+92.60	8.98' Lt.	8.39' Lt.	W14x109	715.84	695.84	20.00	21	–
					Totals		319 Ft.	343 Ft.	332 Ea.

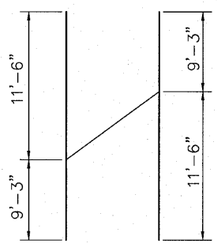

BAR v
CUT DIAGRAM

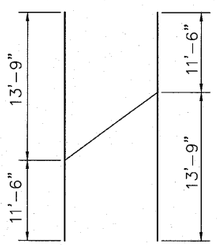

BAR v_1
CUT DIAGRAM

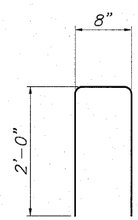

BAR v_2

BORING NUMBER	STATION	OFFSET	GROUND ELEV.	EST. COMP. ROCK ELEV.
B-1	205+62	20.1' LT	728	N/A
B-2	206+69	44.3' LT	728	N/A
B-3	207+60	36.1' LT	728	701.5
B-4	208+20	43.1' RT	695	693.5
B-5	209+64	59.9' RT	693	691.0
B-6	210+83	40.15' RT	696	693.0
B-7	212+10	37.74' RT	696	694.5
B-8	213+71	34.17' RT	698	691.5
B-9	211+98	31.8' LT	716	706.0
B-10	211+67	77.9' LT	720	710.0
B-11	212+57	61.6' LT	721	705.0
B-12	211+12	200.5' LT	736	714.0
B-13	212+13	155.2' LT	730	709.0
B-14	209+57	39.5' LT	730	705.0
B-15	208+63	54.3' LT	730	700.0

BILL OF MATERIAL
Cast-in-Place Concrete

Bar	No.	Size	Length	Shape
h (E)	64	#5	25'-7"	———
h_1(E)	64	#5	23'-8"	———
h_2(E)	16	#5	6'-6"	———
v (E)	48	#4	20'-9"	———
v_1(E)	48	#4	25'-3"	———
v_2(E)	96	#4	4'-8"	———
Concrete Structures			Cu. Yd.	56.3
Reinforcement Bars (Epoxy Coated)			Pound	5,355
Form Liner Textured Surface			Sq. Ft.	990

SP WALL No. 23 DETAILS
PILE INFORMATION &
C.I.P. BILL OF MATERIALS
PEDESTRIAN RIVERWALK
ALONG THE ROCK RIVER
WINNEBAGO COUNTY
SECTION NO. 06-00543-00-BT
STATION 210+86.59 TO
STATION 211+92.60

DESIGNED	CTB
CHECKED	AAG
DRAWN	JAW
CHECKED	JWH

McClure Engineering Associates, Inc.
7282 Argus Drive Rockford, Illinois 61107-5837
(815) 398-2332 Fax (815) 398-2496
Design Firm License: Illinois#184-000816

SHEET NO. 4
4 SHEETS

F.A. RTE.	SECTION	COUNTY	TOTAL SHEETS	SHEET NO.
	06-00543-00-BT	WINNEBAGO	148	98
		CONTRACT NO.		85521
FED. ROAD DIST. NO.	ILLINOIS	FED. AID PROJECT		

BENCHMARK		
NO.	DESCRIPTION	ELEVATION
	North Bonnet Bolt on Fire Hydrant South Of Museum Entrance on the East side of N. Main Street	736.60

EXISTING STRUCTURE: None

Notes: Wall Offsets are Measured from the ℄ of the Pedestrian Walkway to the Back Face of the Cast-in-Place Portion of the Soldier Pile Wall.

S.P.R.W. = Soldier Pile Retaining Wall
C.I.P. = Cast-in-Place

STATE OF ILLINOIS
DEPARTMENT OF TRANSPORTATION

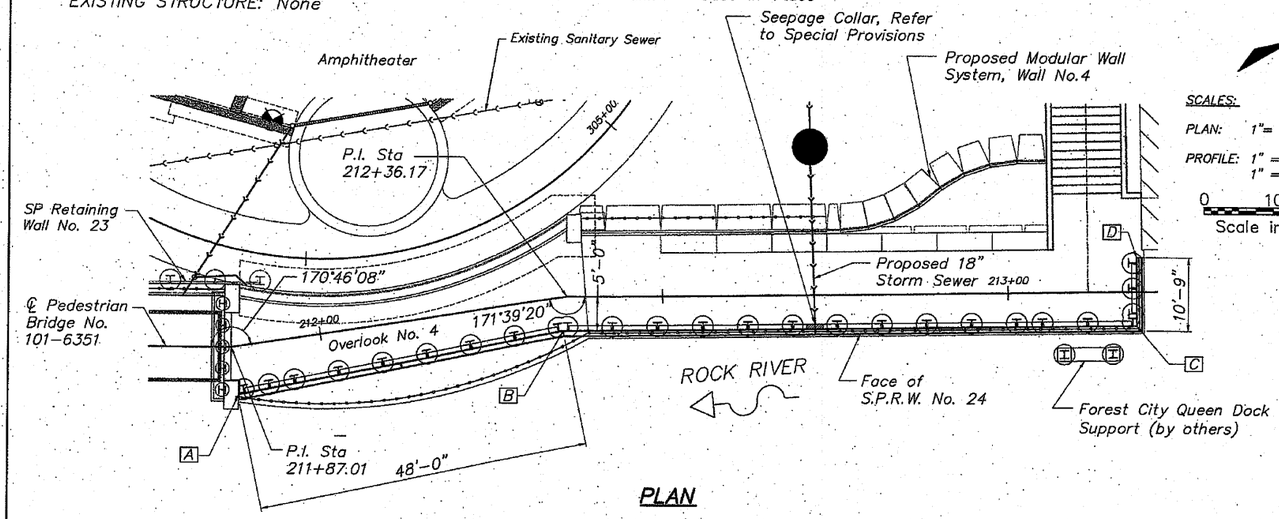

PLAN

SCALES:
PLAN: 1" = 10'
PROFILE: 1" = 10' HORIZONTAL
1" = 10' VERTICAL
0 10 20
Scale in Feet

HIGHWAY CLASSIFICATION
Rockford Pedestrian Riverwalk
Functional Class: Pedestrian

DESIGN SPECIFICATIONS
2002 AASHTO
Standard Specifications – 17th Edition

DESIGN STRESSES
Field Units
f'c = 3,500 psi (Cast-In Place Concrete)
fy = 60,000 psi (Reinforcement)
fy = 50,000 psi (Soldier Pile Steel)

Precast Units
f'c = 5,000 psi (Precast Concrete)
fy = 60,000 psi (Reinforcement)

TOTAL BILL OF MATERIALS

SP WALL No. 24 AND LOOKOUT No. 4 SLAB

ITEM	UNITS	TOTAL
Structure Excavation	Cu. Yd.	270
Concrete Structures	Cu. Yd	95.2
Protective Coat	Sq. Yd.	112.7
Stud Shear Connectors	Each	328
Precast Concrete Lagging	Sq. Ft.	1,078
Furnishing Soldier Piles (W 14x99)	Foot	416
Drilling and Setting Soldier Piles in Soil	Cu. Ft.	761
Drilling and Setting Soldier Piles in Rock	Cu. Ft.	1185
Reinforcement Bars (Epoxy Coated)	Pound	8,125
Geocomposite Wall Drain	Sq. Yd.	50.2
Form Liner Textured Surface	Sq. Ft.	1,080

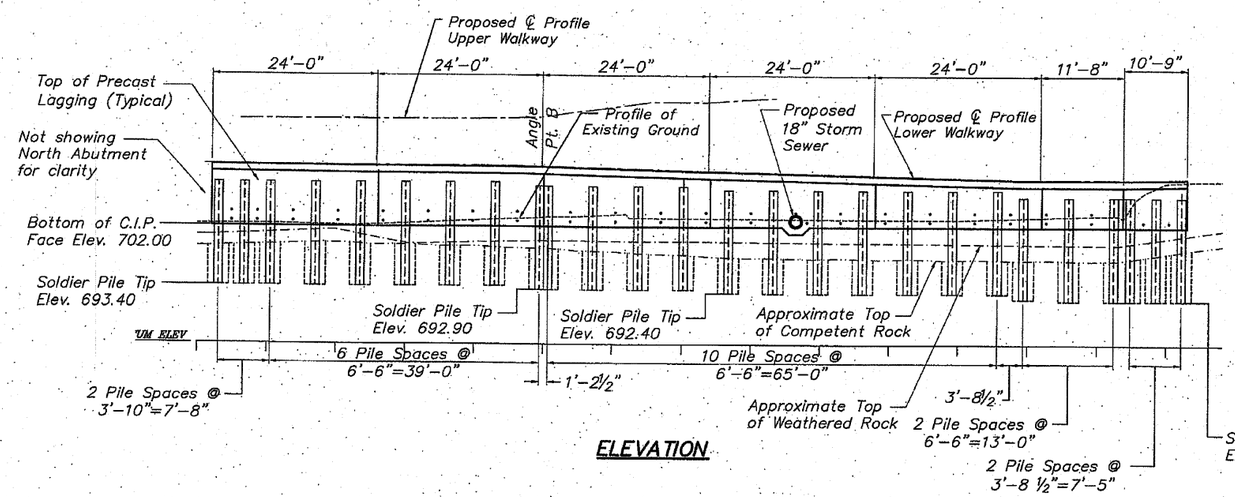

ELEVATION

GENERAL NOTES

1. It shall be the responsibility of the Contractor to verify all dimensions and conditions existing in the field prior to construction and ordering materials.
2. Reinforcement bars designated (E) shall be epoxy coated.
3. Reinforcement bars shall conform to the requirements of ASTM A706 Gr 60. See Special Provisions.
4. Reinforcing bars shall be lapped a minimum as shown on plans where splices occur. Radius bars shall be factory bent and delivered to the site with appropriate radius. Field bending will only be allowed to achieve form clearances.
5. Stud shear connectors shall be ¾" diameter x 4" granular or flux filled headed studs automatically end welded to the front flange in the field.
6. Protective coat shall be applied to all exposed surfaces of the wall and shall extend 1'-0" minimum below finished grade.
7. All construction joints shall be bonded.
8. The cost of cutting off any additional piling shall be included in the cost of "Drilling and Setting Soldier Piles".
9. Drilling and Setting of Soldier Piles will require drilling through layers of sand and gravel. Refer to boring logs. The use of temporary drill casings or drilling slurry may be required to keep holes open prior to placement of concrete at no additional cost to the contract. Refer to Special Provisions for Drilling and Setting Soldier Piles.
10. The approximate embedment depth for the soldier pile tip is as provided on the plans and considers a penetration into competent rock of 5.5 feet (minimum) based on the soil boring information and uniaxial compressive rock strength value of 4,000 PSI (minimum) as provided by Terracon Consultants, Inc. The actual top of rock elevation, which qualifies as competent rock meeting the minimum requirements of the design, shall be determined and field verified by the Geotechnical Engineer during the drilling operation at each soldier pile location. Final pile tip elevations shall be a minimum of 5.5 feet below actual top of competent rock elevations.
11. All exposed edges shall have a ¾" x 45° chamfer, except as shown otherwise. Chamfers on vertical edges shall be continued a minimum of one foot below finished ground level.
12. Exposed surfaces of concrete shall be given a "rubbed finish" except where form liner is specified.
13. Contractor shall be responsible for dewatering in accordance with the erosion control plan at no additional cost to the contract.
14. Backfill behind wall shall be placed to the lines and grades as shown on the plans. The Contractor shall take care to ensure the use of suitable material and proper compaction of all fill areas. Compaction shall be performed with a loose thickness of no more than 8" and each lift shall be compacted to a density equal to or greater than 95% standard proctor maximum dry density (ASTM D-698) taking care not to over compact the soil directly behind the wall. Moisture shall be within -2 to +3 percent of optimum. No heavy equipment shall be allowed within 6 feet of the wall during backfilling and compaction. Compaction shall be by hand method, "walk behind", equipment in the areas within 6 feet of the face of the wall.
15. Backfill of wall behind precast panels must be completed before placement of cast-in-place concrete face. Refer to Precast Panel Details, sheet for additional notes.

WALL INFORMATION CHART

Reference Point	Station to Back Face of Wall	Offset to Back Face of Wall
A	211+87.04	7.09' Rt.
B	212+34.90	4.87' Rt.
C	213+18.55	5.00' Rt.
D	213+18.55	5.00' Lt.

MINIMUM BAR LAP

No. 4 bars	1'-8"
No. 5 bars	2'-2"
No. 6 bars	2'-7"

FORM LINER PATTERN

Milestone, Inc.
Pattern No. MS-1011
Weathered Limestone or Equal
(See Special Provisions)

INDEX OF WALL No. 24 SHEETS

Reviewed and Approved for Structural Adequacy Only

Todd C. Ude 8/1/2010

REGISTERED STRUCTURAL ENGINEER TODD C. UDE 081-005764 Exp. 11/30/2010 STATE OF ILLINOIS

ALI A. GHARAMITI 081-006090 LICENSED STRUCTURAL ENGINEER OF MOLINE STATE OF ILLINOIS

Signature

Date 8/31/10

GENERAL PLAN & ELEVATION
SP WALL No. 24
PEDESTRIAN RIVERWALK
ALONG THE ROCK RIVER
WINNEBAGO COUNTY
SECTION NO. 06-00543-00-BT
STATION 211+87.04 TO STATION 213+18.55

DESIGNED	CTB
CHECKED	AAG
DRAWN	JAW
CHECKED	JWH

EXAMINED _____ 20
ENGINEER OF BRIDGE DESIGN
PASSED
ENGINEER OF BRIDGES AND STRUCTURES

McClure Engineering Associates, Inc.
7282 Argus Drive Rockford, Illinois 61107-5837
(815) 398-2332 Fax (815) 398-2496
Design Firm License: illinois#184-000818

SHEET NO. 1
7 SHEETS

F.A. RTE.	SECTION	COUNTY	TOTAL SHEETS	SHEET NO.
	06-00543-00-BT	WINNEBAGO	148	99
		CONTRACT NO.		85521
FED. ROAD DIST. NO.	ILLINOIS	FED. AID PROJECT		

STATE OF ILLINOIS
DEPARTMENT OF TRANSPORTATION

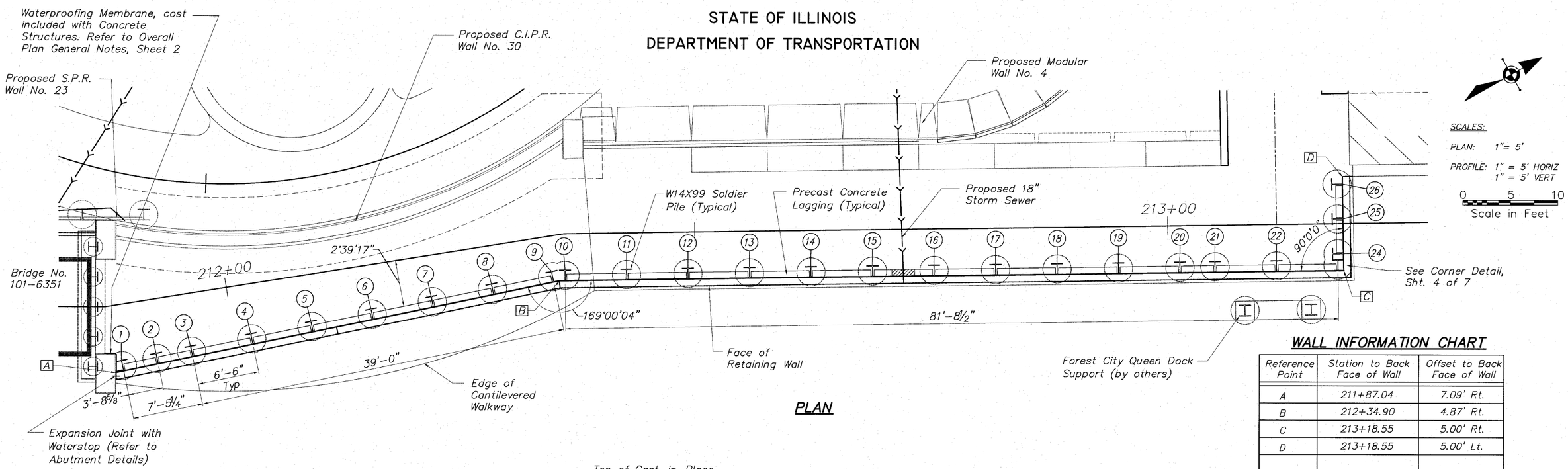

PLAN

WALL INFORMATION CHART

Reference Point	Station to Back Face of Wall	Offset to Back Face of Wall
A	211+87.04	7.09' Rt.
B	212+34.90	4.87' Rt.
C	213+18.55	5.00' Rt.
D	213+18.55	5.00' Lt.

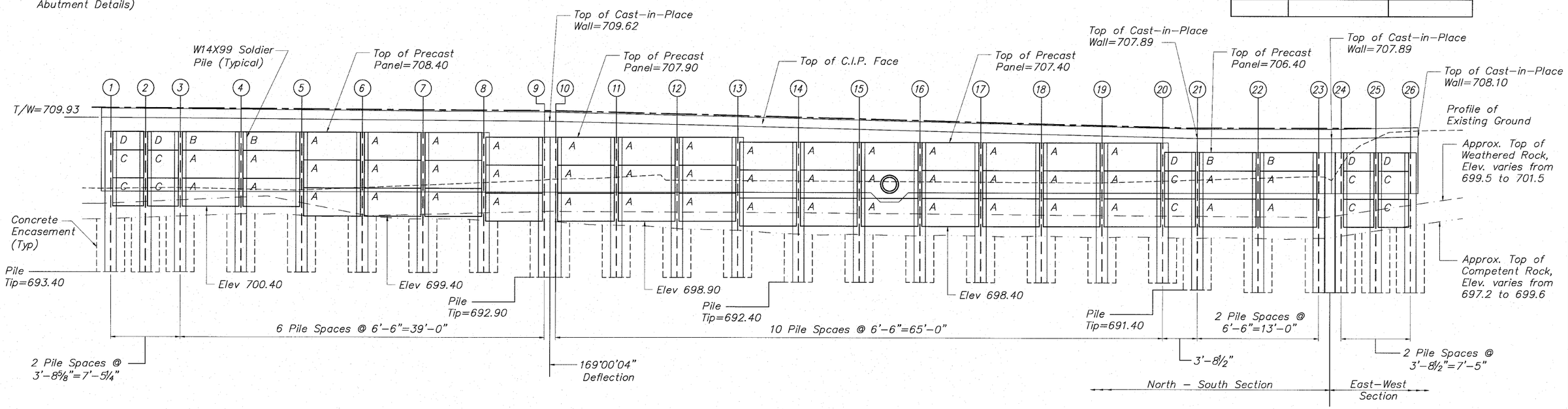

ELEVATION (Showing Precast Panels)
(Looking @ Front Face of Wall)

PRECAST PANEL SCHEDULE

PANEL	NOMINAL SIZE	No.	Sq. Ft. PANELS
A	3' x 6'	50	900
B	2' x 6'	4	48
C	3' x 3'-3"	10	97.5
D	2' x 3'-3"	5	32.5
Total			1078

SP WALL No. 24 DETAILS
PLAN AND PRECAST ELEVATION
PEDESTRIAN RIVERWALK ALONG THE ROCK RIVER
WINNEBAGO COUNTY
SECTION NO. 06-00543-00-BT
STATION 211+87.04 TO STATION 213+18.55

DESIGNED	CTB
CHECKED	AAG
DRAWN	JAW
CHECKED	JWH

McClure Engineering Associates, Inc.
7282 Argus Drive Rockford, Illinois 61107-5837
(815) 398-2332 Fax (815) 398-2496
Design Firm License: Illinois#184-000816

SHEET NO. 2
7 SHEETS

F.A. RTE.	SECTION	COUNTY	TOTAL SHEETS	SHEET NO.
	06-00543-00-BT	WINNEBAGO	148	100
		CONTRACT NO.		85521
FED. ROAD DIST. NO.	ILLINOIS	FED. AID PROJECT		