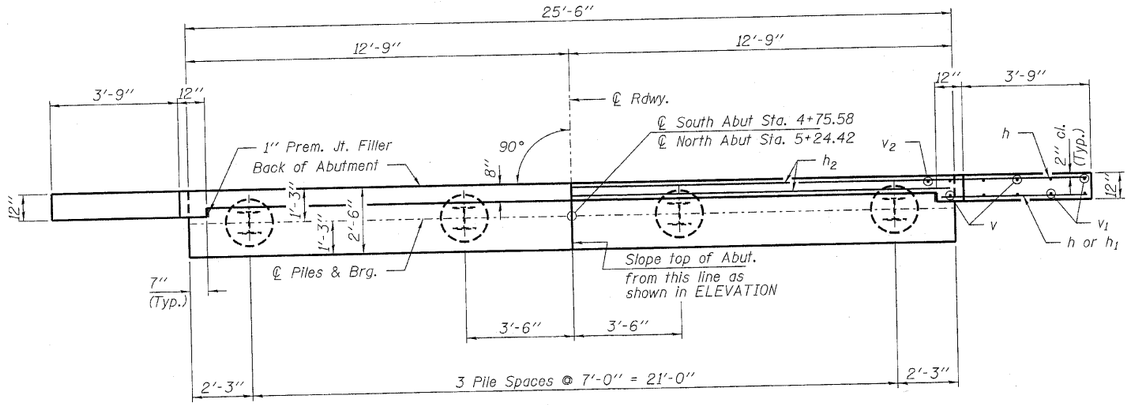

PLAN

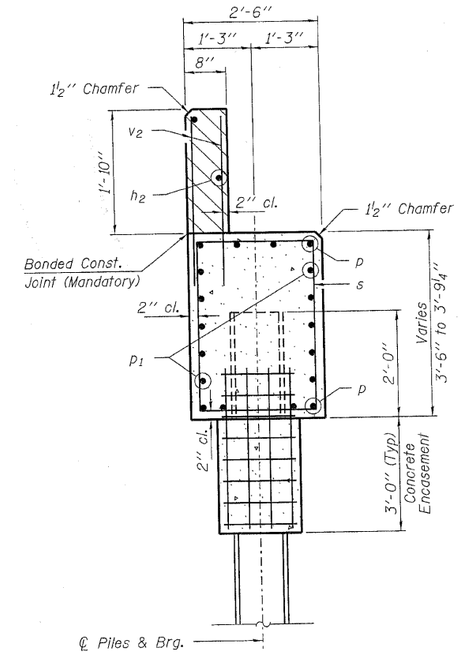

SECTION A-A

Hatched area to be poured after beams are in place.

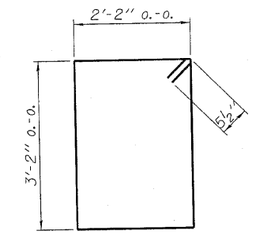

BAR s

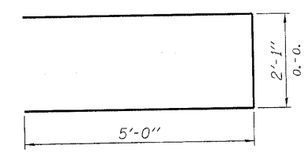

BAR u

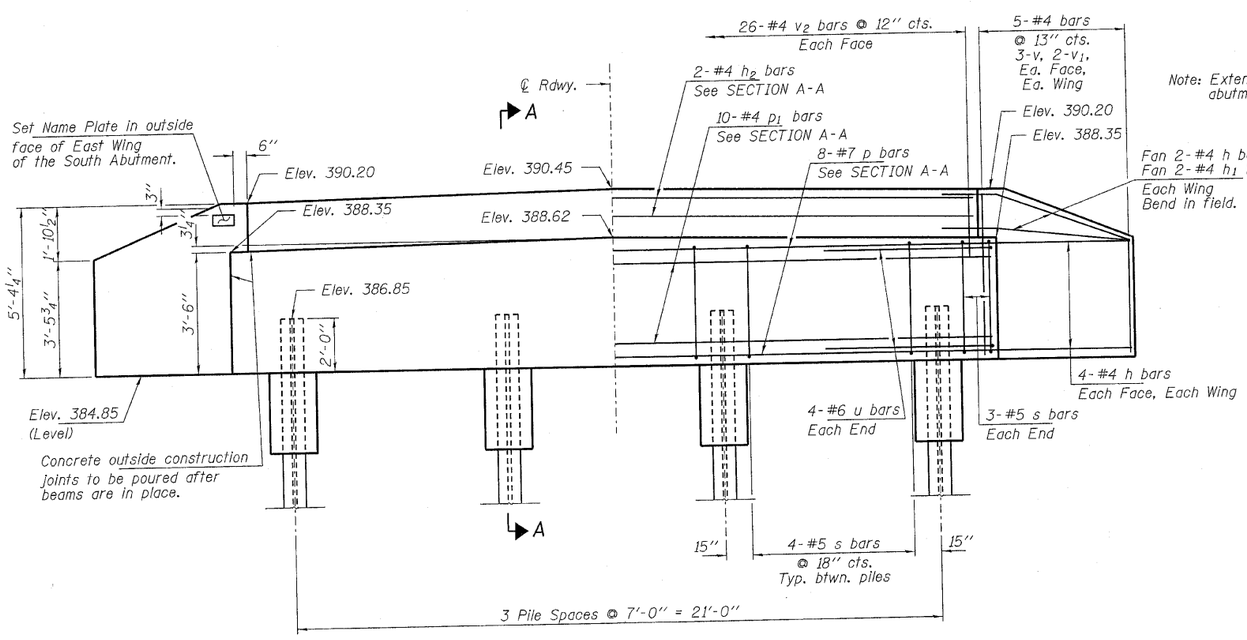

ELEVATION

Note: Extend h bars into abutment cap.

PILE DATA

Type _____ Steel HP10x42
No. Req'd. (2 Abuts.) _____ 8
Factored Resistance Available (Rf) ___ 167 Kips/Pile
Nominal Required Bearing (Rn) _____ 335 Kips/Pile
Est. Length _____ 45 Ft/Pile - S. Abut.
50 Ft/Pile - N. Abut.

Notes: The Steel H-Piles shall be according to AASHTO M270 Grade 50.

BILL OF MATERIAL - 2 ABUTS.

BAR	NO.	SIZE	LENGTH	SHAPE
h	40	#4	6'-0"	
h_1	8	#4	4'-6"	
h_2	4	#4	25'-2"	
p	16	#7	25'-2"	
p_1	20	#4	25'-2"	
s	36	#5	11'-7"	
u	16	#6	12'-1"	
v	24	#4	4'-3"	
v_1	16	#4	3'-3"	
v_2	104	#4	2'-8"	
Concrete Structures			Cu. Yd.	22.2
Concrete Encasement			Cu. Yd.	2.8
Reinforcement Bars			Pound	2,420
Steel Piles HP10x42			Foot	380
Name Plates			Each	1

ABUTMENTS
STRUCTURE NO. 097-3268

DESIGNED -	A.S.L.
CHECKED -	S.W.M.
DRAWN -	D.A.B.
CHECKED -	S.W.M.

HAMPTON, LENZINI AND RENWICK, INC.
CIVIL ENGINEERS · STRUCTURAL ENGINEERS · LAND SURVEYORS
3085 STEVENSON DRIVE, SUITE 201
SPRINGFIELD, ILLINOIS 62703
217.546.3400 www.hlrengineering.com
184.000959
ILLINOIS PROFESSIONAL DESIGN FIRM LS / PE / SE CORPORATION

PROJECT NUMBER: 09.0053.130 | DATE: 07/27/10

SHEET NO. 6
8 SHEETS

F.A.S.	SECTION	COUNTY	TOTAL SHEETS	SHEET NO.
1884	09-00114-00-BR	WHITE	12	10

CONTRACT NO. 99431

FED. ROAD DIST. NO. | ILLINOIS | FED. AID PROJECT