11-5-2021 LETTING ITEM 017

F.A.P RTE.	SECTION	COUNTY	TOTAL SHEETS	SHEET NO.
330	2021-096-BP	COOK	29	1
	ILLINOIS	CONTRACT NO. 62P24		

STATE OF ILLINOIS
DEPARTMENT OF TRANSPORTATION

D-91-185-21

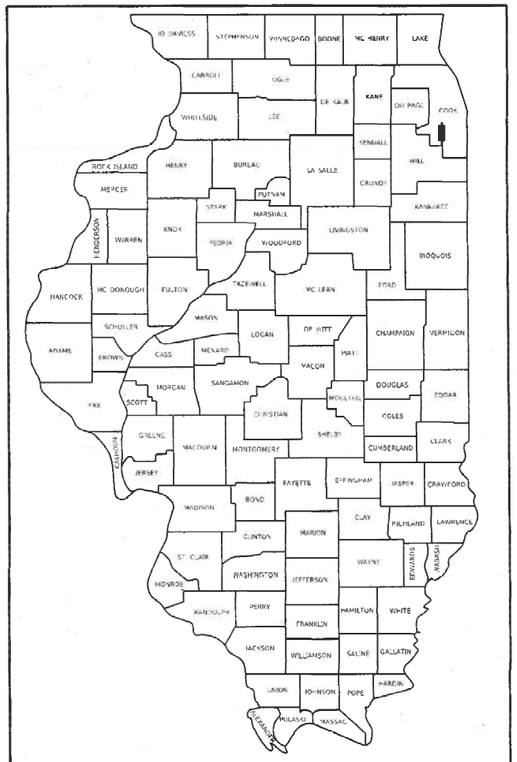

LOCATION OF SECTION INDICATED THUS:-

FOR INDEX OF SHEETS, SEE SHEET NO. 2

THIS PROJECT IS LOCATED IN UNINCORPORATED COOK COUNTY

PROPOSED HIGHWAY PLANS

FAP ROUTE 330: US ROUTE 45(LAGRANGE RD)
OVER CAL SAG CHANNEL
SECTION 2021–096–BP
PROJECT: NHPP–GF2X(964)
BRIDGE PAINTING
COOK COUNTY

C–91–222–21

TRAFFIC DATA

US ROUTE 45:
ADT(2019) = 36,900
POSTED SPEED LIMIT = 45MPH
FUNCTIONAL CLASS = OTHER PRINCIPAL ARTERIAL

T 37 N

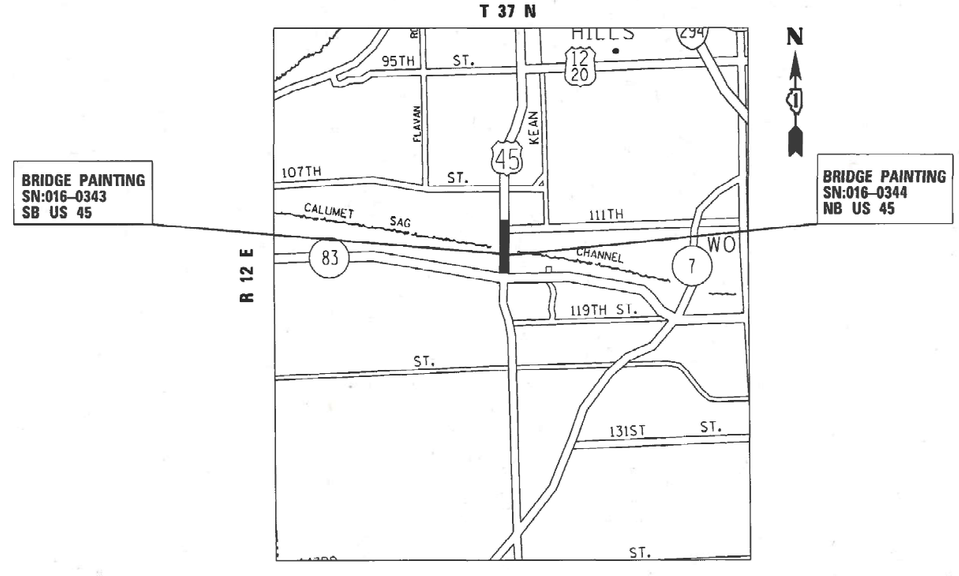

PALOS TOWNSHIP

GROSS AND NET LENGTH = 1054 FT. = 0.20 MILE

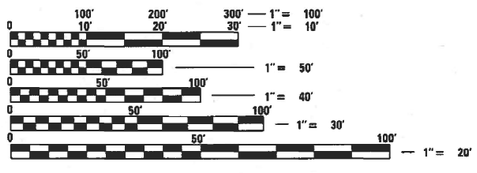

FULL SIZE PLANS HAVE BEEN PREPARED USING STANDARD ENGINEERING SCALES. REDUCED SIZED PLANS WILL NOT CONFORM TO STANDARD SCALES. IN MAKING MEASUREMENTS ON REDUCED PLANS, THE ABOVE SCALES MAY BE USED.

J.U.L.I.E.
JOINT UTILITY LOCATION INFORMATION FOR EXCAVATORS
1–800–892–0123
OR 811

STATE OF ILLINOIS
DEPARTMENT OF TRANSPORTATION

SUBMITTED August 5 20 21
Jose Rios (CAS)
REGIONAL ENGINEER

October 1 20 21
ENGINEER OF DESIGN AND ENVIRONMENT

October 2 20 21
Stephen M Lewis
DIRECTOR OF HIGHWAYS PROJECT IMPLEMENTATION

PROJECT ENGINEER: LUKASZ POCIECHA (847) 705–4420

PROJECT MANAGER: FAWAD AQUEEL (847) 705–4247

CONTRACT NO. 62P24

PRINTED BY THE AUTHORITY OF THE STATE OF ILLINOIS

INDEX OF SHEETS

1	COVER PAGE
2	INDEX OF SHEETS, STATE STANDARDS AND GENERAL NOTES
3	SUMMARY OF QUANTITIES
4	MAINTENANCE OF TRAFFIC- TYPICAL SECTIONS
5-8	MAINTENANCE OF TRAFFIC
9-23	EXISTING BRIDGE PLANS (SN 016-0343, SN 016-344))
24-25	PAVEMENT MARKING PLAN
26	TRAFFIC CONTROL AND PROTECTION FOR SIDE ROADS, INTERSECTIONS, AND DRIVEWAYS (TC-10)
27	DISTRICT ONE TYPICAL PAVEMENT MARKINGS (TC-13)
28	TRAFFIC CONTROL AND PROTECTION AT TURN BAYS (TO REMAIN) OPEN TO TRAFFIC (TC-14)
29	ARTERIAL ROAD INFORMATION SIGN (TC-22)

STATE STANDARDS

STANDARD NO.	DESCRIPTION
701101-05	OFF-ROAD OPERATIONS, MULTILANE, 15' (4.5 m) TO 24'' (600 mm) FROM PAVEMENT EDGE
701411-09	LANE CLOSURE MULTILANE AT ENTRANCE OR EXIT RAMP fOR SPEEDS > 45 MPH
701422-10	LANE CLOSURE MULTILANE fOR SPEEDS > 45 MPH TO 55 MPH
701701-10	URBAN LANE CLOSURE, MULTILANE INTERSECTION
701901-08	TRAFFIC CONTROL DEVICES

GENERAL PAINT NOTES

CLEANING AND PAINTING OF THE EXISTING STRUCTURAL STEEL SHALL BE AS SPECIFIED IN THE SPECIAL PROVISION FOR "CLEANING AND PAINTING EXISTING STEEL STRUCTURES".

ALL ITEMS (SUCH AS, BUT NOT LIMITED TO: CONDUITS, BRACKETS AND DECK DRAINS) ATTACHED TO OUTSIDE OF THE FASCIA BEAMS SHOULD BE CLEANES AND PAINTED.

ALL INTERIOR AND EXTERIOR SURFACES OF APPROACH SPANS AND BUILT-UP TRUSS MEMBERS, BEAMS, BEARINGS AND OTHER STRUCTURAL STEEL (FLOOR BEAMS, STRINGERS, DIAPHRAGMS, ETC..) SHALL BE CLEANED PER NEAR WHITE BLAST CLEANING-SSPC-SP10. THESE AREAS SHALL BE PAINTED ACCORDING TO THE REQUIREMENTS OF PAINT SYSTEM I -OZ/E/U. THE COLOR OF THE FINAL FINISH COAT FOR ALL INTERIOR STEEL SURFACES SHALL BE GRAY, MUNSELL NO 5B 7/1. THE COLOR OF THE FINAL FINISH COAT FOR TRUSS MEMBERS AND FACIA BEAMS SHALL BE BLUE MUNSELL NO 10B 3/6.

A MINIMUM OF TWO (2) AIR MONITORS WILL BE REQUIRED TO MONITOR ABRASIVE BLASTING OPERATIONS. SEE SPECIAL PROVISIONS FOR "CONTAINMENT AND DISPOSAL OF LEAD PAINT CLEANING RESIDUES. "

ALL VERTICAL AND DIAGONAL LAPPING MEMBERS SHALL BE CAULKED ALONG THE TOP AND SIDES. THE BOTTOM SHALL REMAIN OPEN FOR DRAINAGE.

JOINT SEALANT SHALL BE INSTALLED AROUND ALL CONNECTION PLATES AND AT AREAS OF PACK RUST BETWEEN BUILT UP MEMBERS.

THE SEALANT SHALL BE AN APPROVED POLYURETHANE SEALANT, COMPATIBLE WITH THE PROPOSED PAINT SYSTEM AND SHALL BE SUBMITTED TO THE ENGINEER FOR APPROVAL PRIOR TO USE.

THE SURFACES OF THE CREVICES TO RECIEVE JOINT SEALANT SHALL BE CLEANED COMMERCIAL GRADE POWER TOO CLEANING SSPC-SP15 AND PAINTED ACCORDING TO THE REQUIRES OF PAINT SYSTEM 2-PS/EM/U. ONCE THE PAINT SYSTEM IS DRY TO TOUCH, THE SEALANT SHALL BE INSTALLED OVER THE FINAL FINISH COAT. AFTER THE SEALANT IS CURED IN ACCORDANCE WITH THE MANUFACTURER'S WRITTEN PRODUCT DATA SHEET, A STRIP FINISH COAT SHALL BE APPLIED OVER THE SEALANT.
THE COST OF JOINT SEALANT AND CAULKING INCLUDED IN THE "CLEANING AND PAINTING STEEL BRIDGE" PAY ITEM.

GENERAL NOTES

BEFORE STARTING ANY EXCAVATION, THE CONTRACTOR SHALL CALL "J.U.L.I.E." AT (800) 892-0123 OR 811 FOR FIELD LOCATIONS OF BURIED ELECTRIC, TELEPHONE AND GAS UTILITIES. 48 HOUR NOTIFICATION IS REQUIRED.

THE CONTRACTOR SHALL COORDINATE CONSTRUCTION ACTIVITIES WITH UTILITY COMPANIES AND COOK COUNTY.

PLAN DIMENSIONS AND DETAILS RELATIVE TO EXISTING PLANS ARE SUBJECT TO NOMINAL CONSTRUCTION VARIATIONS. THE CONTRACTOR SHALL FIELD VERIFY EXISTING DIMENSIONS AND DETAILS AFFECTING NEW CONSTRUCTION AND MAKE NECESSARY APPROVED ADJUSTMENTS PRIOR TO CONSTRUCTION OR ORDERING OF MATERIALS. SUCH VARIATIONS SHALL NOT BE CAUSE FOR ADDITIONAL COMPENSATION FOR A CHANGE IN SCOPE OF THE WORK, HOWEVER, THE CONTRACTOR WILL BE PAID FOR THE QUANTITY ACTUALLY FURNISHED BASED AT THE UNIT PRICE BID FOR THE WORK.

THE CONTRACTOR WILL NOT BE ALLOWED TO SET UP A YARD OR FIELD OFFICE ON STATE PROPERTY WITHOUT WRITTEN PERMISSION FROM THE DEPARTMENT.

THE CONTRACTOR SHALL CONTACT THE DISTRICT ONE TRAFFIC CONTROL SUPERVISOR AT KALPANA.KANNAN-HOSADURGA@ILLINOIS.GOV FOR ARTERIALS A MINIMUM OF 72 HOURS IN ADVANCE OF BEGINNING WORK.

THE CONTRACTOR SHALL CONTACT THE AREA TRAFFIC FIELD TECHNICIAN, PATRICE HARRIS, AT PATRICE.HARRIS@ILLINOIS.GOV
A MINIMUM OF TWO (2) WEEKS PRIOR TO PLACEMENT OF PERMANENT PAVEMENT MARKINGS

IT SHALL BE THE CONTRACTOR'S RESPONSIBILITY TO PROTECT AND MAINTAIN THE EXISTING BRIDGE LIGHTING AT ANY LOCATIONS THAT LIGHTING IS ENCOUNTERED ADJACENT TO AN AREA TO BE CLEANED AND PAINTED.

THE CONTRACTOR SHALL BE REQUIRED TO PROVIDE ACCESS TO ABUTTING PROPERTY AT ALL TIMES DURING THE CONSTRUCTION OF THIS PROJECT.

DO NOT SCALE PLANS FOR CONSTRUCTION DIMENSIONS.

THE CONTRACTOR SHALL OBTAIN COAST GUARD APPROVAL FOR ANY WORK THAT MAY INTERFERE WITH NAVIGATIONAL OPERATIONS OF THE NAVIGABLE WATERS. A WORK PLAN SHALL BE PREPARED FOR THE CONTRACTOR, REVIEWED AND APPROVED BY THE ENGINEER AND BE SUBMITTED BY THE ENGINEER TO THE COAST GUARD AT THE ADDRESS LISTED BELOW FOR APPROVAL.

BRIDGE ADMINISTRATOR
US COAST GUARD
RIGHT COAST GUARD DISTRICT
1240 E. NINTH ST
CLEVELAND, OH 44199-2060
(216) 902-6087

SUMMARY OF QUANTITIES

CODE NO	ITEM	UNIT	TOTAL QUANTITIES URBAN	CONSTRUCTION TYPE CODE: 80% FED 20% STATE 0047 BRIDGE 1 SN 016-0343	80% FED 20% STATE 0047 BRIDGE 2 SN 016-0344				
67000400	ENGINEER'S FIELD OFFICE, TYPE A	CAL MO	12	6	6				
67100100	MOBILIZATION	L SUM	1	0.5	0.5				
70107025	CHANGEABLE MESSAGE SIGN	CAL DA	120	60	60				
70300904	PAVEMENT MARKING TAPE, TYPE IV 4"	FOOT	11430	5715	5715				
70400100	TEMPORARY CONCRETE BARRIER	FOOT	1125	562	563				
70600270	IMPACT ATTENUATORS, TEMPORARY (FULLY REDIRECTIVE, WIDE), TEST LEVEL 3	EACH	2	1	1				
78000200	THERMOPLASTIC PAVEMENT MARKING - LINE 4"	FOOT	3266	1633	1633				
78009004	MODIFIED URETHANE PAVEMENT MARKING - LINE 4"	FOOT	4730	2365	2365				
78009006	MODIFIED URETHANE PAVEMENT MARKING - LINE 6"	FOOT	300	150	150				
78200011	BARRIER WALL REFLECTORS, TYPE C	EACH	24	12	12				
X0320011	IMPACT ATTENUATORS, RELOCATE (FULLY REDIRECTIVE, WIDE), TEST LEVEL 3	EACH	2	1	1				
78300202	PAVEMENT MARKING REMOVAL - WATER BLASTING	SQ FT	270	135	135				

SUMMARY OF QUANTITIES

CODE NO	ITEM	UNIT	TOTAL QUANTITIES URBAN	CONSTRUCTION TYPE CODE: 80% FED 20% STATE 0047 BRIDGE 1 SN 016-0343	80% FED 20% STATE 0047 BRIDGE 2 SN 016-0344				
X2700003	GROOVING FOR RECESSED PAVEMENT MARKING 8"	FOOT	556	278	278				
X2700005	PREFORMED PLASTIC PAVEMENT MARKING, TYPE B - INLAID - LINE 7"	FOOT	556	278	278				
X7010216	TRAFFIC CONTROL AND PROTECTION, (SPECIAL)	L SUM	1	0.5	0.5				
X7010410	SPEED DISPLAY TRAILER	CAL MO	8	4	4				
X7030005	TEMPORARY PAVEMENT MARKING REMOVAL	SQ FT	3772	1886	1886				
Z0007101	CONTAINMENT AND DISPOSAL OF LEAD PAINT CLEANING RESIDUES NO. 1	L SUM	1	1					
Z0007102	CONTAINMENT AND DISPOSAL OF LEAD PAINT CLEANING RESIDUES NO. 2	L SUM	1		1				
Z0010501	CLEANING AND PAINTING STEEL BRIDGE NO. 1	L SUM	1	1					
Z0010502	CLEANING AND PAINTING STEEL BRIDGE NO. 2	L SUM	1		1				
Z0030850	TEMPORARY INFORMATION SIGNING	SQ FT	77	38.5	38.5				

REV-SEP

FILE NAME = pw:\\planroom.dot.illinois.gov:PWIDOT\Documents\IDOT Offices\District 1\Projects\D1852\CADData\Design\D1852i-sht-SOQ.dgn	USER NAME = mullanacd	DESIGNED -	REVISED -
		DRAWN -	REVISED -
	PLOT SCALE = 100.0000 ' / in.	CHECKED -	REVISED -
	PLOT DATE = 8/12/2021	DATE -	REVISED -

STATE OF ILLINOIS
DEPARTMENT OF TRANSPORTATION

SUMMARY OF QUANTITIES

SCALE: | SHEET NO. 1 OF 1 SHEETS | STA. | TO STA.

F.A.P. RTE.	SECTION	COUNTY	TOTAL SHEETS	SHEET NO.
330	2021-096-BP	COOK	1	1
		CONTRACT NO. 62P24		

FED. ROAD DIST. NO. 1 | ILLINOIS | FED. AID PROJECT

GENERAL NOTES:

1. THE CONTRACTOR SHALL REMOVE AND SAFELY STORE (FREE FROM THEFT OR DAMAGE) OR COVER ALL CONFLICTING EXISTING SIGNS FOR THE DURATION OF THE CONSTRUCTION. ALL SIGNS SHALL BE RESTORED TO THEIR ORIGINAL CONDITION AT THE END OF CONSTRUCTION.
2. THE FOLLOWING APPLY TO CONSTRUCTION SIGNS:
   - A) THE CONTRACTOR SHALL FURNISH ALL SIGNS.
   - B) THE CONTRACTOR SHALL BE RESPONSIBLE FOR AND REPLACE ANY SIGNS THAT ARE SUPPLIED BY OTHERS AND DAMAGED BY THE CONTRACTOR'S WORK FORCE OR SUBCONTRACTORS DURING RELOCATION OR CONSTRUCTION OPERATIONS.
   - C) ALL SIGNS AND ASSEMBLIES SHALL BE CERTIFIED BY THE CONTRACTOR AS MEETING THE APPLICABLE REQUIREMENTS OF NCHRP REPORT 350. TEST LEVEL 2.
   - D) ALL SIGNS SHALL BE CONSIDERED INCLUDED IN THE COST OF THE TRAFFIC CONTROL AND PROTECTION (SPECIAL) PAY ITEM, EXCEPT FOR TEMPORARY INFORMATIONAL SIGNING AS NOTED ON THE PLANS.
3. ALL TEMPORARY PAVEMENT MARKINGS DURING STAGED CONSTRUCTION SHALL BE PAVEMENT MARKING TAPE, TYPE IV OF THE WIDTH AND COLOR SPECIFIED ON THE PLAN SHEETS
4. THE CONTRACTOR SHALL MAINTAIN DRAINAGE AND EROSION CONTROL DURING CONSTRUCTION FOR THE DURATION OF THE CONTRACT.
5. THE CONTRACTOR SHALL PROVIDE AND MAINTAIN ACCESS TO ALL COMMERCIAL AND RESIDENTIAL ENTRANCES FOR THE ENTIRE DURATION OF THE PROJECT UNLESS OTHERWISE NOTED ON THE PLANS.
6. SIDE ROAD, INTERSECTIONS, AND DRIVEWAY TRAFFIC CONTROL SHALL BE IN ACCORDANCE WITH THE TYPICAL ENTRANCE SIGNING DETAIL, DISTRICT DETAILS TC-10 AND TC-26, AND AS SHOWN ON THE PLANS

SUGGESTED MAINTENANCE OF TRAFFIC STAGES:

STAGE 1:

TRAFFIC:

- MAINTAIN ONE LANE EACH FOR EASTBOUND AND WESTBOUND TRAFFIC AS SHOWN ON EAST AND WEST BRIDGE AS SHOWN ON PLANS

STAGE 2:

TRAFFIC:

- MAINTAIN ONE LANE EACH FOR EASTBOUND AND WESTBOUND TRAFFIC AS SHOWN ON EAST AND WEST BRIDGE AS SHOWN ON PLANS

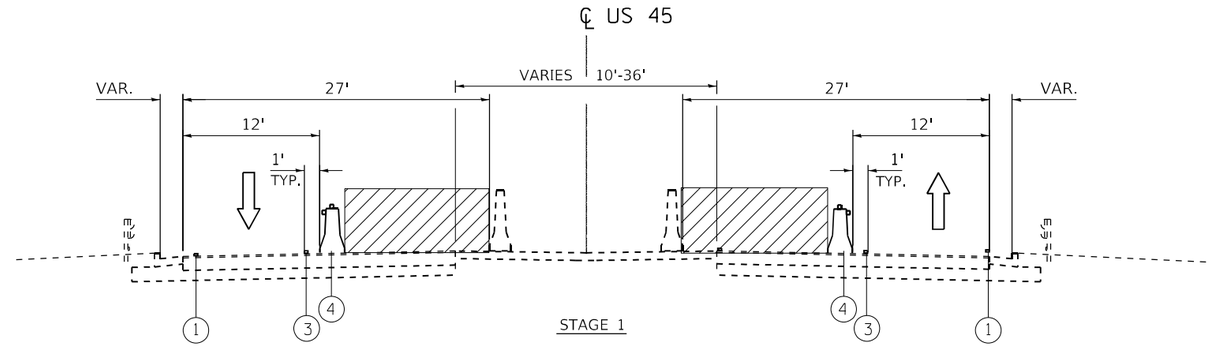

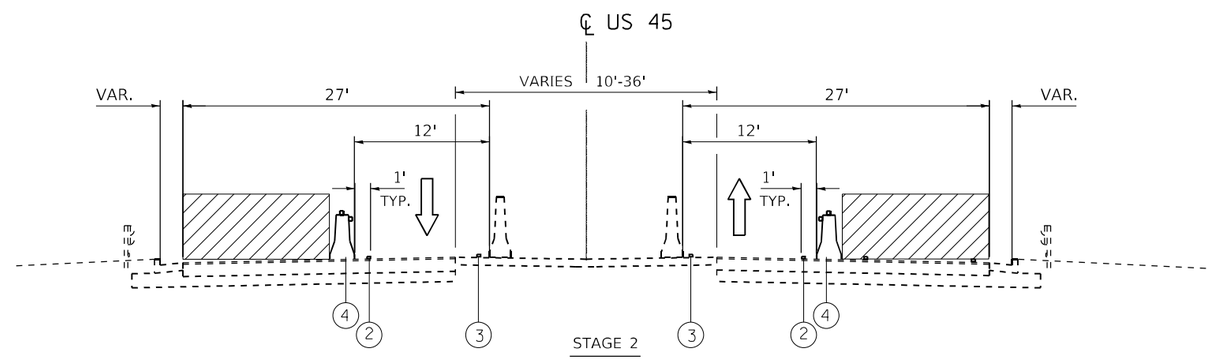

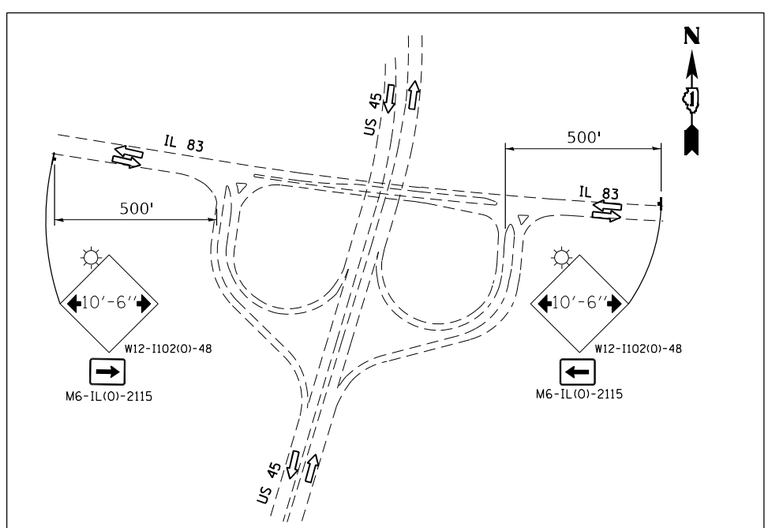

ADVANCED WIDTH RESTRICTION SIGN AT IL 83

LEGEND

1. EXISTING PAVEMENT MARKING TO REMAIN
2. PAVEMENT MARKING 4" SOLID WHITE EDGE LINE
3. PAVEMENT MARKING 4" SOLID YELLOW EDGE LINE
4. TEMPORARY CONCRETE BARRIER WITH REFLECTOR

WORK ZONE

MODEL: Default
FILE NAME: pw:\\dimoom.dot.illinois.gov:PWIDOT\Documents\IDOT Offices\District 1\Projects\D118521\CADData\Design\D118521-sht-typical.dgn

USER NAME = mullaneed	DESIGNED -	REVISED -	
	DRAWN -	REVISED -	
PLOT SCALE = 10000.0000 ' / in.	CHECKED -	REVISED -	
PLOT DATE = 8/10/2021	DATE -	REVISED -	

STATE OF ILLINOIS
DEPARTMENT OF TRANSPORTATION

MAITENANCE OF TRAFFIC – TYPICAL SECTIONS
US 45 (LA GRANGE RD) AT CAL-SAG CHANNEL

SCALE: | SHEET 1 OF 1 SHEETS | STA. TO STA.

F.A.P. RTE.	SECTION	COUNTY	TOTAL SHEETS	SHEET NO.
330	2021-096-BP	COOK	29	4

CONTRACT NO. 62P24

ILLINOIS | FED. AID PROJECT

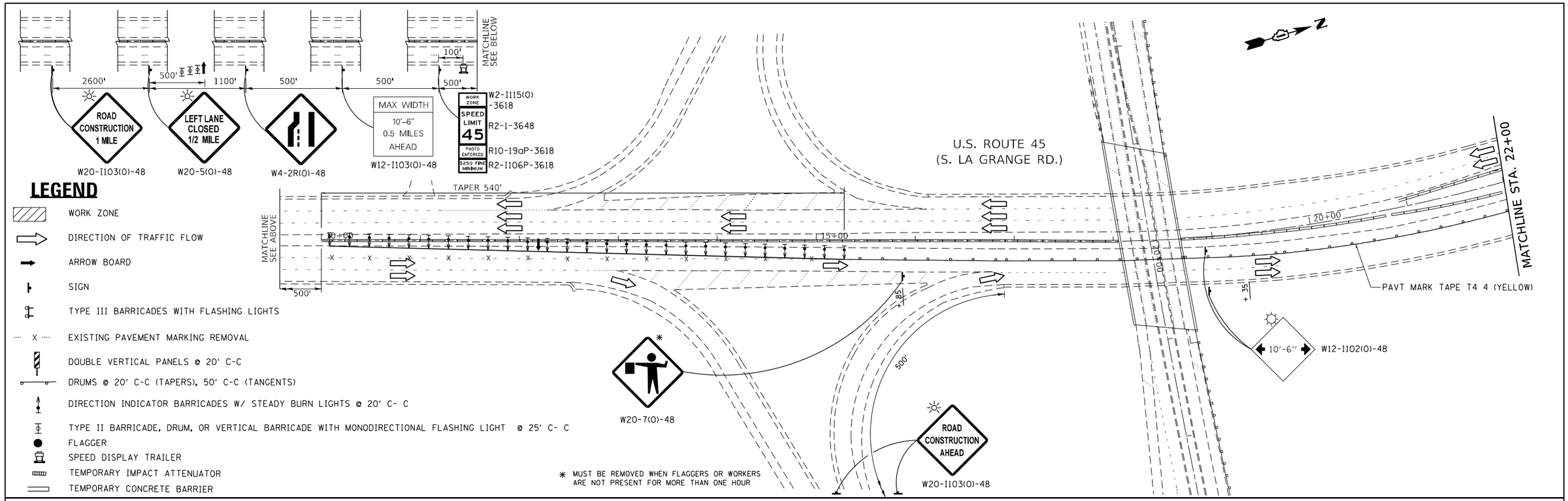

USER NAME = mullaneed	DESIGNED -	REVISED -	
	DRAWN -	REVISED -	
PLOT SCALE = 100.0000 ' / in.	CHECKED -	REVISED -	
PLOT DATE = 8/10/2021	DATE -	REVISED -	

STATE OF ILLINOIS
DEPARTMENT OF TRANSPORTATION

MAINTENANCE OF TRAFFIC – STAGE I
U.S. ROUTE 45 (LA GRANGE RD.) AT CAL–SAG CHANNEL

SCALE: 1"=50' | SHEET 1 OF 2 SHEETS | STA. TO STA.

F.A.P. RTE.	SECTION	COUNTY	TOTAL SHEETS	SHEET NO.
330	2021-096-BP	COOK	29	5
		CONTRACT NO. 62P24		
		ILLINOIS FED. AID PROJECT		

MODEL: Default
FILE NAME: pw:\\dbanroom.dot.illinois.gov:PWIDOT\Documents\IDOT Offices\District 1\Projects\D118521\CADData\Design\D118521-mot.dgn

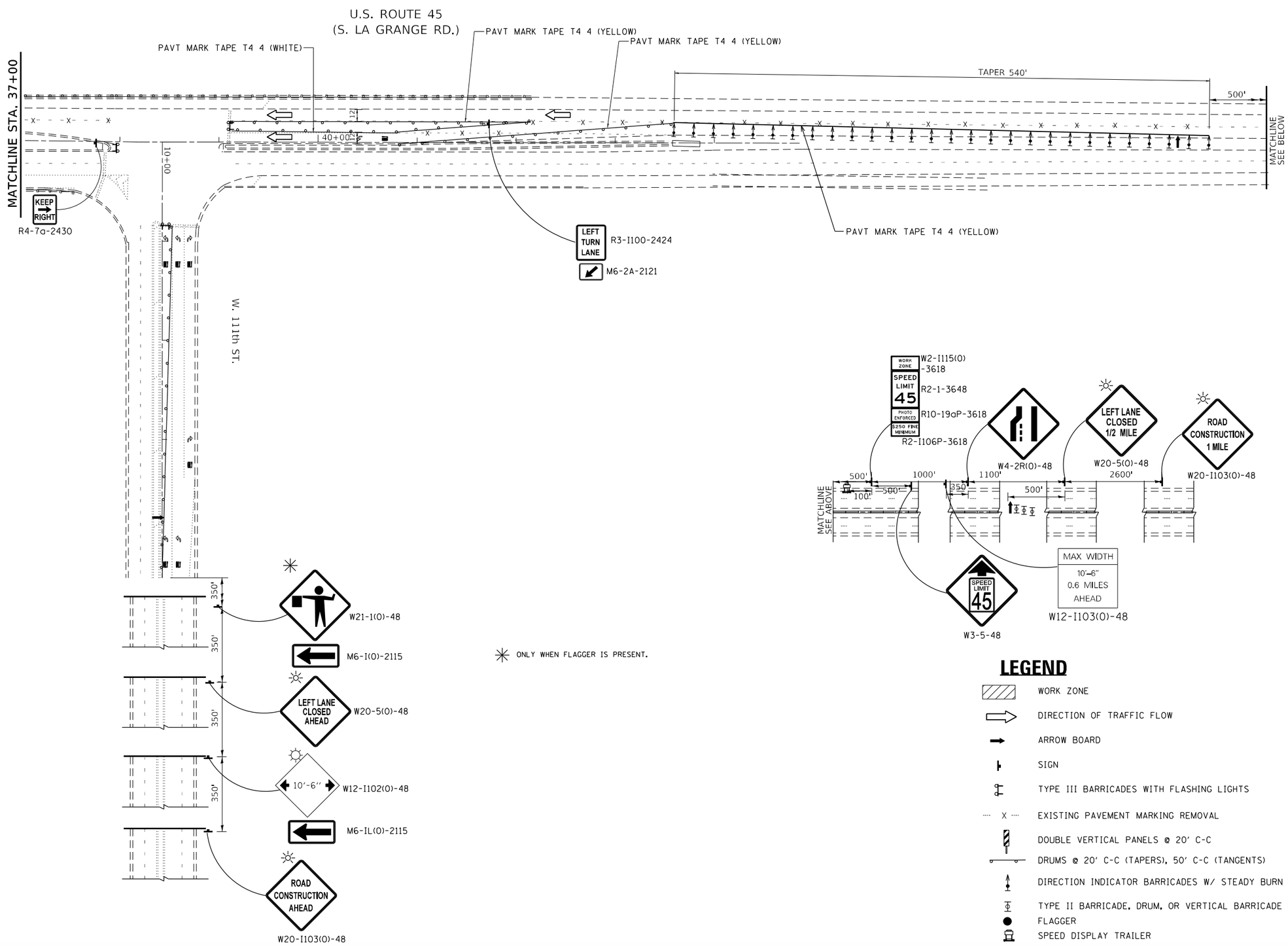

✳ ONLY WHEN FLAGGER IS PRESENT.

LEGEND

- WORK ZONE
- DIRECTION OF TRAFFIC FLOW
- ARROW BOARD
- SIGN
- TYPE III BARRICADES WITH FLASHING LIGHTS
- X EXISTING PAVEMENT MARKING REMOVAL
- DOUBLE VERTICAL PANELS @ 20' C-C
- DRUMS @ 20' C-C (TAPERS), 50' C-C (TANGENTS)
- DIRECTION INDICATOR BARRICADES W/ STEADY BURN LIGHTS @ 20' C- C
- TYPE II BARRICADE, DRUM, OR VERTICAL BARRICADE WITH MONODIRECTIONAL FLASHING LIGHT @ 25' C- C
- FLAGGER
- SPEED DISPLAY TRAILER

MODEL: Default
FILE NAME: pw:\\uhannoam.dot.illinois.gov:PWIDOT\Documents\IDOT Offices\District 1\Projects\D118521\CADData\Design\D118521-msc.dgn

USER NAME = mullaneco	DESIGNED -	REVISED -	
	DRAWN -	REVISED -	
PLOT SCALE = 100.0000 ' / in.	CHECKED -	REVISED -	
PLOT DATE = 8/10/2021	DATE -	REVISED -	

STATE OF ILLINOIS
DEPARTMENT OF TRANSPORTATION

MAINTENANCE OF TRAFFIC – STAGE I
U.S. ROUTE 45 (LA GRANGE RD.) AT CAL-SAG CHANNEL

SCALE: 1"=50' | SHEET 2 OF 2 SHEETS | STA. TO STA.

F.A.P. RTE.	SECTION	COUNTY	TOTAL SHEETS	SHEET NO.
330	2021-096-BP	COOK	29	6
		CONTRACT NO. 62P24		
		ILLINOIS FED. AID PROJECT		

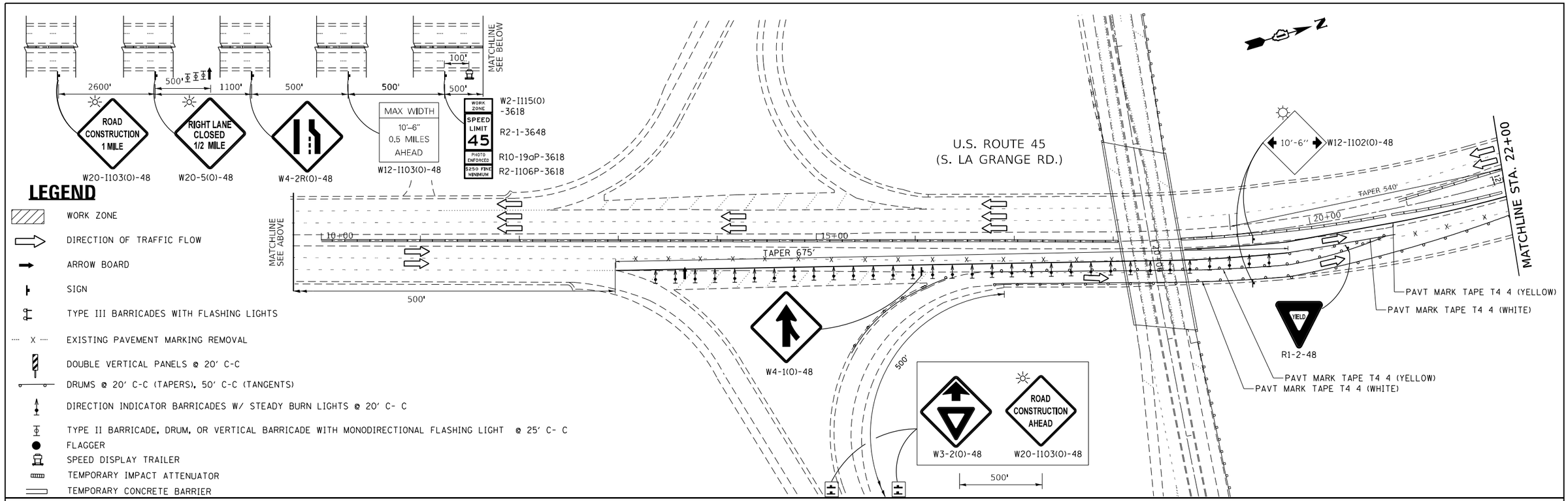

MODEL: Default
FILE NAME: pw:\\uhanroom.dot.illinois.gov:PWIDOT\Documents\IDOT Offices\District 1\Projects\D118521\CADData\Design\D118521-mot.dgn

USER NAME = mullaneed	DESIGNED -	REVISED -	
	DRAWN -	REVISED -	
PLOT SCALE = 100.0000 ' / in.	CHECKED -	REVISED -	
PLOT DATE = 8/10/2021	DATE -	REVISED -	

STATE OF ILLINOIS
DEPARTMENT OF TRANSPORTATION

MAINTENANCE OF TRAFFIC – STAGE II
U.S. ROUTE 45 (LA GRANGE RD.) AT CAL-SAG CHANNEL

SCALE: 1"=50' | SHEET 1 OF 2 SHEETS | STA. TO STA.

F.A.P. RTE.	SECTION	COUNTY	TOTAL SHEETS	SHEET NO.
330	2021-096-BP	COOK	29	7
		CONTRACT NO. 62P24		
	ILLINOIS	FED. AID PROJECT		

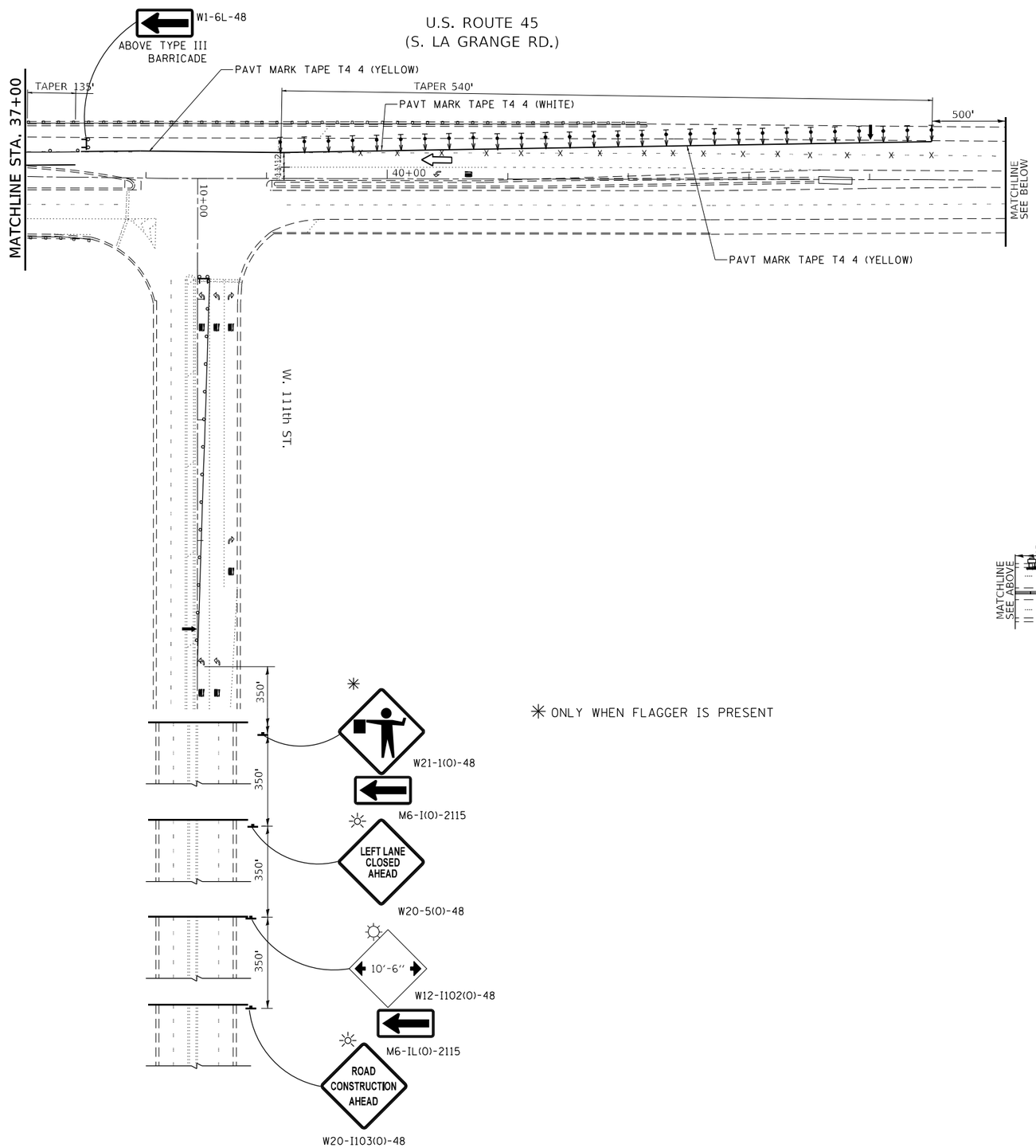

✳ ONLY WHEN FLAGGER IS PRESENT

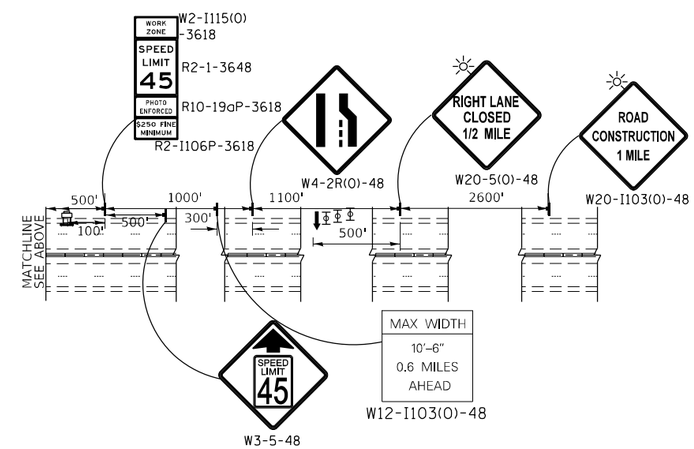

LEGEND

- WORK ZONE
- DIRECTION OF TRAFFIC FLOW
- ARROW BOARD
- SIGN
- TYPE III BARRICADES WITH FLASHING LIGHTS
- X — EXISTING PAVEMENT MARKING REMOVAL
- DOUBLE VERTICAL PANELS @ 20' C-C
- DRUMS @ 20' C-C (TAPERS), 50' C-C (TANGENTS)
- DIRECTION INDICATOR BARRICADES W/ STEADY BURN LIGHTS @ 20' C- C
- TYPE II BARRICADE, DRUM, OR VERTICAL BARRICADE WITH MONODIRECTIONAL FLASHING LIGHT @ 25' C- C
- FLAGGER
- SPEED DISPLAY TRAILER

MODEL: Default
FILE NAME: pw:\\dcnroom.dot.illinois.gov:PWIDOT\Documents\IDOT Offices\District 1\Projects\D118521\CADData\Design\D118521-maz.dgn

USER NAME = mullaneco	DESIGNED -	REVISED -
	DRAWN -	REVISED -
PLOT SCALE = 100.0000 ' / in.	CHECKED -	REVISED -
PLOT DATE = 8/10/2021	DATE -	REVISED -

STATE OF ILLINOIS
DEPARTMENT OF TRANSPORTATION

MAINTENANCE OF TRAFFIC – STAGE II
U.S. ROUTE 45 (LA GRANGE RD.) AT CAL-SAG CHANNEL

SCALE: 1"=50' | SHEET 2 OF 2 SHEETS | STA. TO STA.

F.A.P. RTE.	SECTION	COUNTY	TOTAL SHEETS	SHEET NO.
330	2021-096-BP	COOK	29	8
		CONTRACT NO. 62P24		
		ILLINOIS	FED. AID PROJECT	

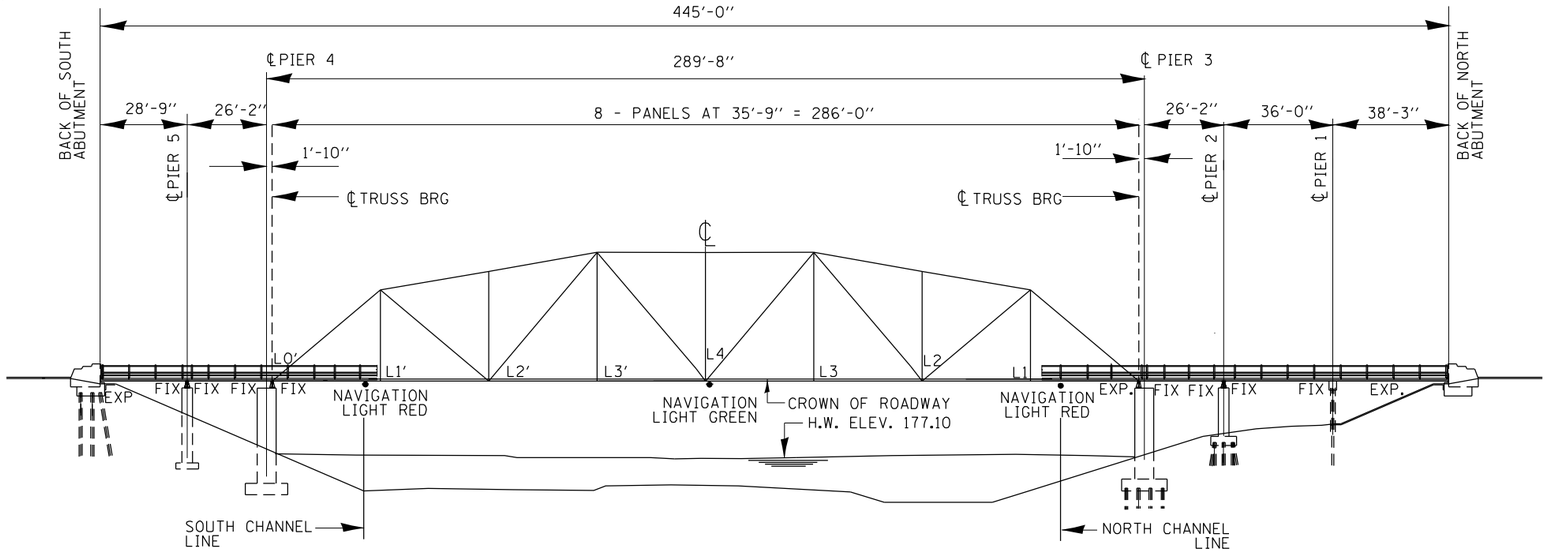

ELEVATION

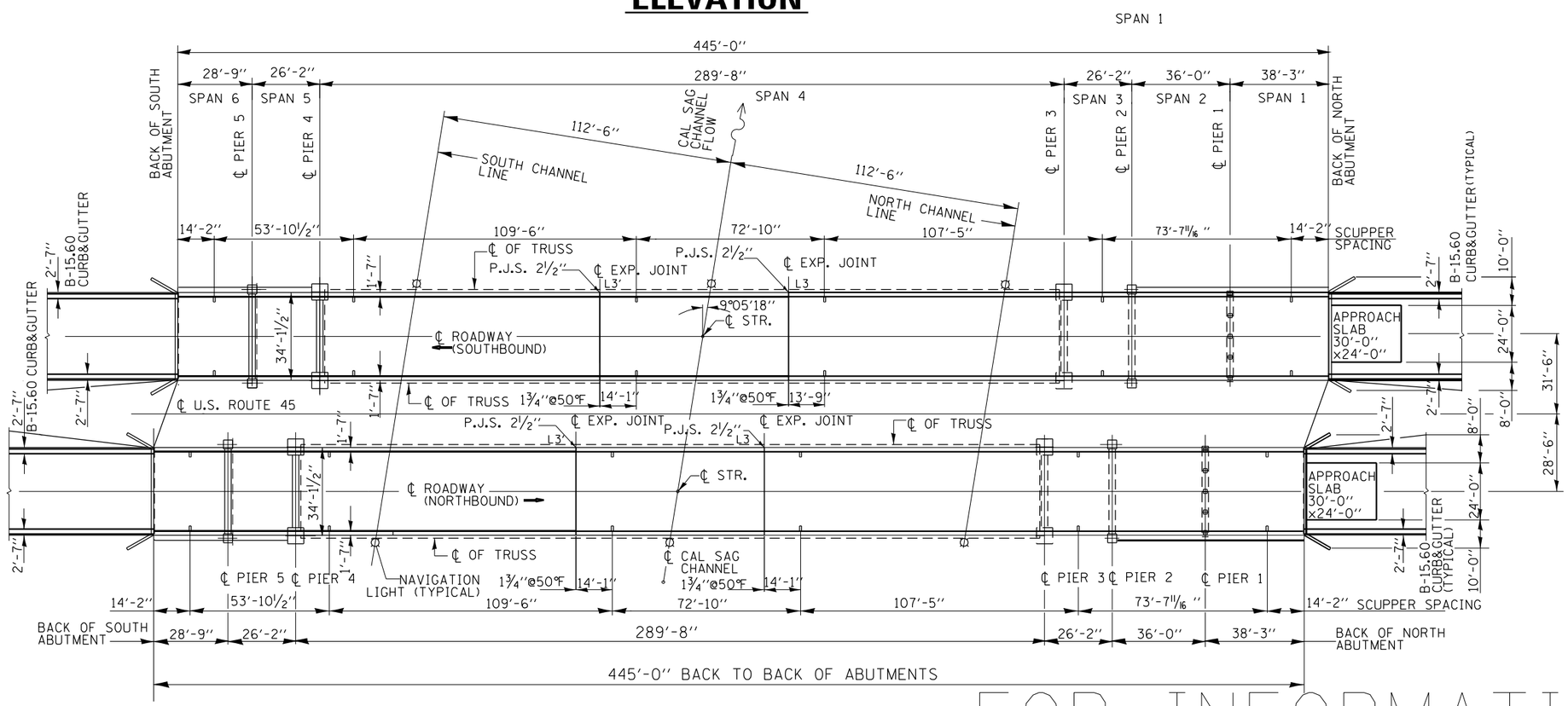

PLAN

FOR INFORMATION ONLY

MODEL: Default
FILE NAME: pw:\\planroom.dot.illinois.gov:PWIDOT\Documents\IDOT Offices\District 1\Projects\D118521\CADData\Design\D118521-sht-details.dgn

DESIGNED - Jean Midy	EXAMINED	DATE -	STATE OF ILLINOIS DEPARTMENT OF TRANSPORTATION	US 45 AT CAL SAG CHANNEL PLAN AND ELEVATION S.N, 016–0343 AND S.N. 016–0344	
CHECKED -	ACTING ENGINEER OF STRUCTURAL SERVICES				
DRAWN - Mark Tiniakos	PASSED	REVISED -			
CHECKED - Jean Midy	ENGINEER OF BRIDGES AND STRUCTURES	REVISED -		SHEET 3 OF 6 SHEETS	

F.A.P. RTE.	SECTION	COUNTY	TOTAL SHEETS	SHEET NO.
330	2021-096-BP	COOK	29	9
		CONTRACT NO. 62P24		
		ILLINOIS	FED. AID PROJECT	

8/10/2021 1:48:07 PM

FOR INFORMATION ONLY

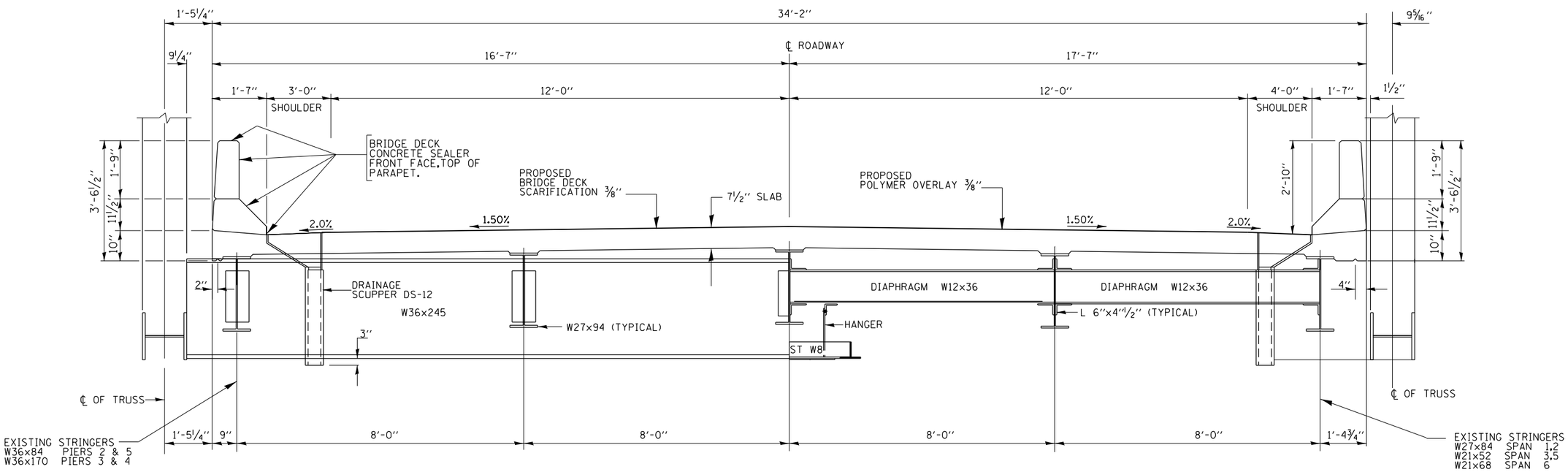

CROSS SECTION
(SOUTHBOUND–LOOKING SOUTH)
(NORTHBOUND–LOOKING NORTH)

MODEL: Default
FILE NAME: pw:\\planroom.dot.illinois.gov:PWIDOT\Documents\IDOT Offices\District 1\Projects\D118521\CADData\Design\D118521-sht-details.dgn

DESIGNED - Jean Midy	EXAMINED	DATE -	STATE OF ILLINOIS DEPARTMENT OF TRANSPORTATION
CHECKED -	ACTING ENGINEER OF STRUCTURAL SERVICES		
DRAWN - Mark Tiniakos	PASSED	REVISED -	
CHECKED - Jean Midy	ENGINEER OF BRIDGES AND STRUCTURES	REVISED -	

8/10/2021 1:48:07 PM

US 45 AT CAL SAG CHANNEL
CROSS SECTION
S.N, 016–0343 AND S.N. 016–0344

SHEET 4 OF 6 SHEETS

F.A.P. RTE.	SECTION	COUNTY	TOTAL SHEETS	SHEET NO.
330	2021-096-BP	COOK	29	10
		CONTRACT NO. 62P24		
		ILLINOIS	FED. AID PROJECT	

ROUTE NO	SECTION	COUNTY	TOTAL SHEETS	SHEET NO.
S.B.I. 51	511-B-C-R	COOK	70	20
STA.		TO STA.		
G. P. R. R. - C. O. &	ILLINOIS	PROJECT		

SHEET 7 OF 30

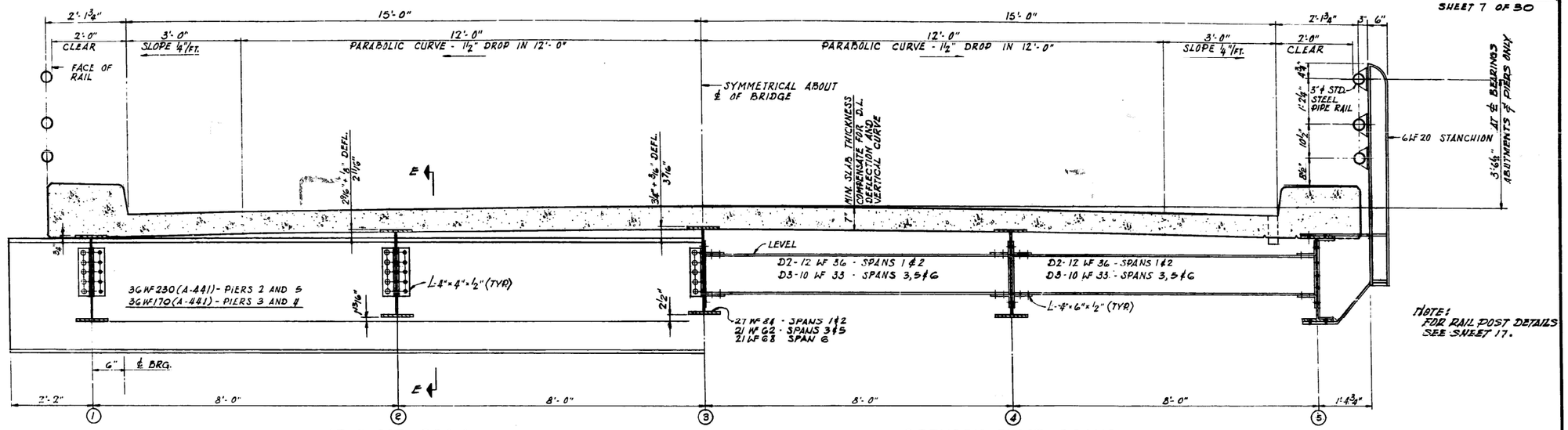

NOTE: FOR RAIL POST DETAILS SEE SHEET 17.

AT FLOOR BEAM — BETWEEN FLOOR BEAMS

CROSS SECTION AT APPROACH SPANS

SCALE: ¾" = 1'-0"

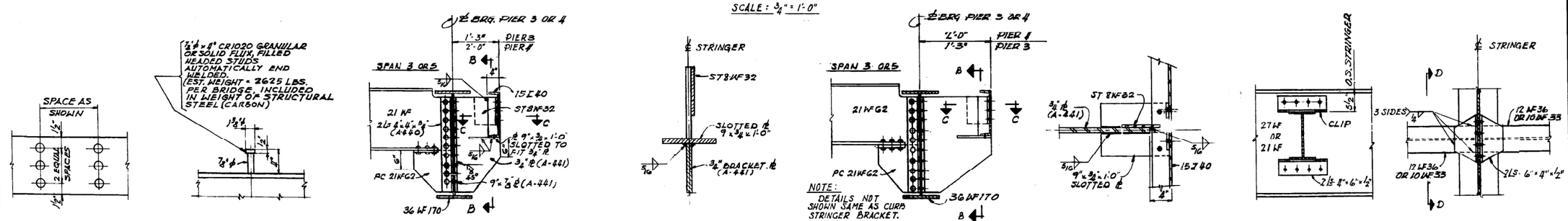

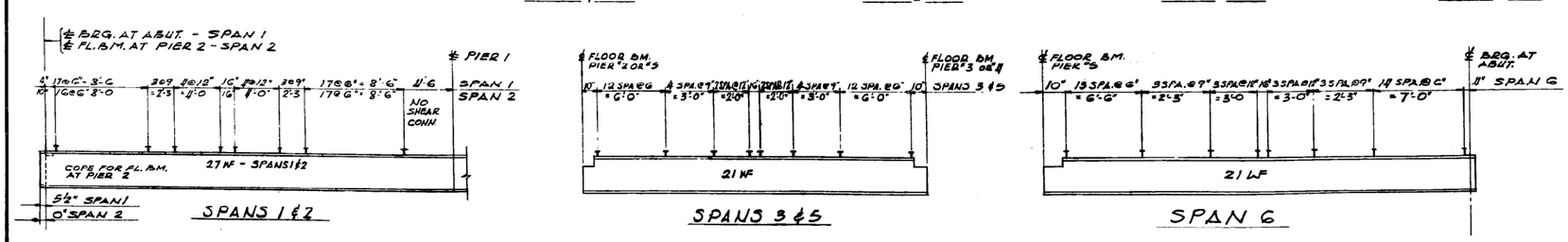

SHEAR CONNECTOR SPACING

NOTE: FOR SECT. E-E SEE SHT. 8

ILLINOIS DIVISION OF HIGHWAYS
CALUMET-SAG NAVIGATION PROJECT
96TH AVENUE HIGHWAY BRIDGE

CROSS SECTION & DETAILS
SPANS 1, 2, 3, 5 & 6 (E & W)

SCALE AS NOTED — DATE: JUNE 18, 1965

ALFRED BENESCH & COMPANY
10 SOUTH WABASH AVE
CONSULTING ENGINEERS
CHICAGO, ILLINOIS

MODEL: Default
FILE NAME: pw:\\dbanroom.dot.illinois.gov:PWIDOT\Documents\IDOT Offices\District 1\Projects\D118521\CADData\Design\D118521-sht-details.dgn

USER NAME = mullaneco	DESIGNED -	REVISED -	
	DRAWN -	REVISED -	
PLOT SCALE = 100.0000 ' / in.	CHECKED -	REVISED -	
PLOT DATE = 8/10/2021	DATE -	REVISED -	

STATE OF ILLINOIS
DEPARTMENT OF TRANSPORTATION

EXISTING BRIDGE PLANS
CROSS SECTION DETAILS

SCALE: | SHEET OF SHEETS | STA. TO STA.

F.A.P. RTE.	SECTION	COUNTY	TOTAL SHEETS	SHEET NO.
330	2021-096-BP	COOK	29	11
		CONTRACT NO. 62P24		
		ILLINOIS	FED. AID PROJECT	

ROUTE NO.	SECTION	COUNTY	TOTAL SHEETS	SHEET NO.
S.B.I. 51	511-8-0R	COOK	70	21
STA.		TO STA.		
B. P. R. REG. NO. 4	ILLINOIS	PROJECT		

SHEET 8 OF 30

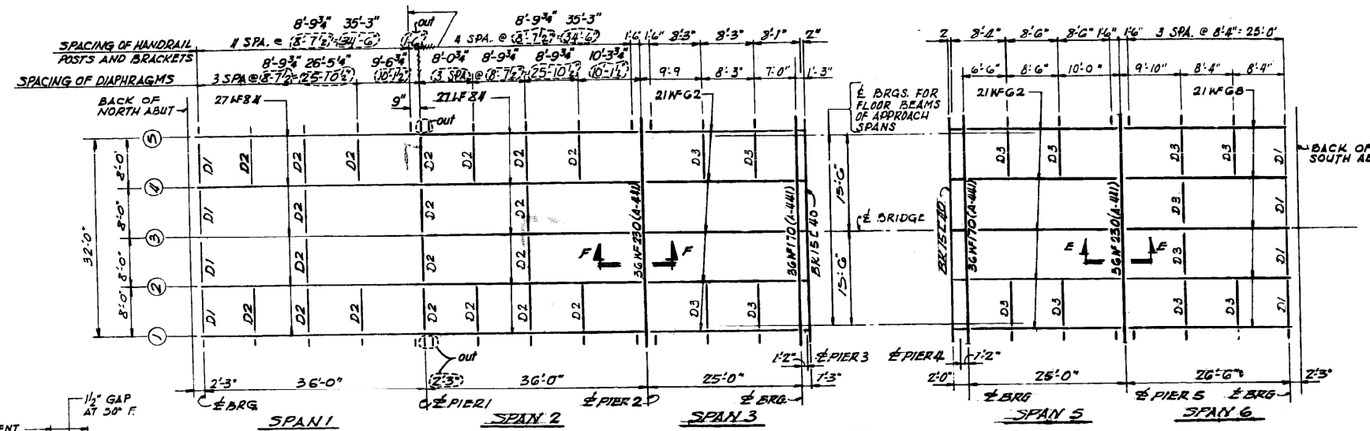

FRAMING PLAN

SCALE 3/32" = 1'-0"

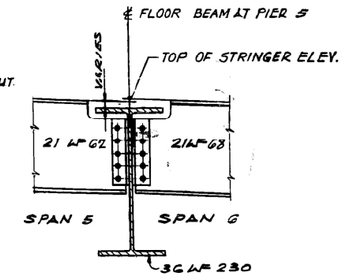

SECTION "E-E"

SECTION "F-F" (SIMILAR)

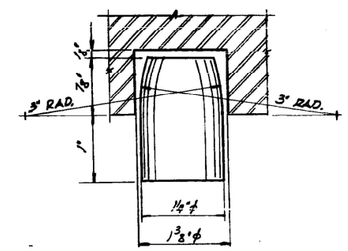

PINTLE DETAIL

NOTE:

DIAPHRAGM D1 - 12 WF 40
DIAPHRAGM D2 - 12 WF 36
DIAPHRAGM D3 - 10 WF 33

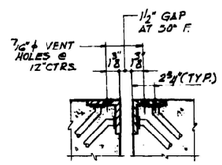

DETAIL "C"

SCALE: 1½" = 1'-0"

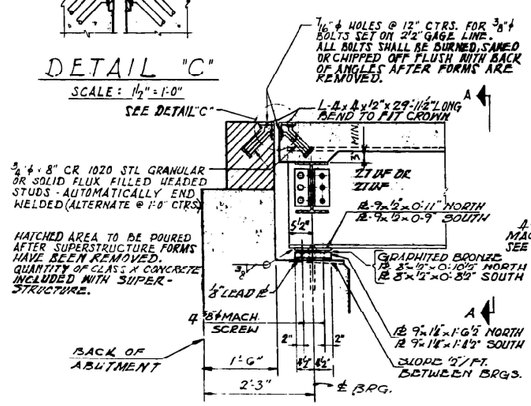

SECTION AT ABUTMENTS

SCALE: 3/4" = 1'-0"

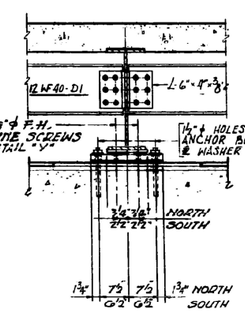

SECTION A-A

SCALE: 3/4" = 1'-0"

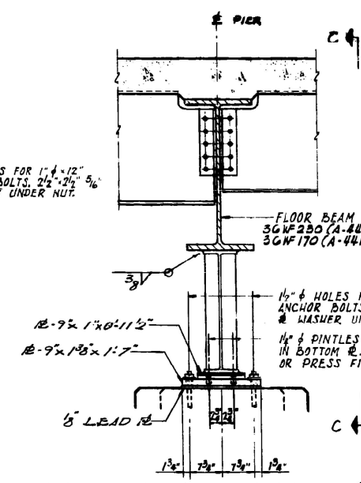

SECTION AT PIERS 2 & 5

BEARINGS AT PIERS 3 & 4 SIMILAR

SCALE: 3/4" = 1'-0"

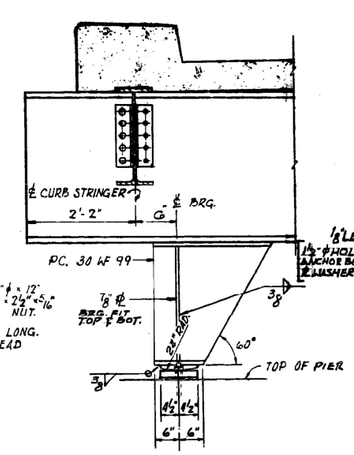

SECTION C-C

SCALE: 3/4" = 1'-0"

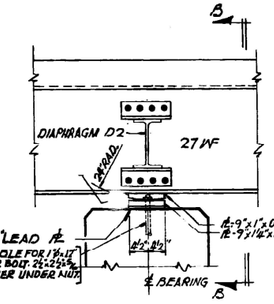

SECTION AT PIER 1

SCALE 3/4" = 1'-0"

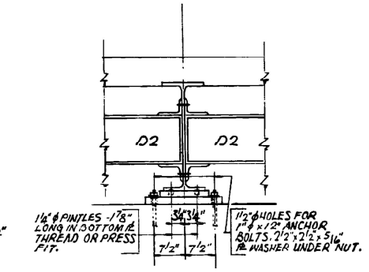

SECTION B-B

SCALE 3/4" = 1'-0"

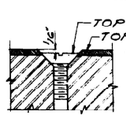

DETAIL "Y"

TOP OF STRINGER ELEVATIONS

FOR FABRICATION ONLY

LOCATION / STRINGER No.	1 AND 5	2 AND 4	3
℄ BRGS. NORTH ABUTMENT	28.475	28.627	28.683
℄ BRGS. PIER 1	28.592	28.744	28.800
℄ BRGS. PIER 2	28.636	28.789	28.844
℄ BRGS. PIER 3 SPAN 3	28.621	28.776	28.832
℄ BRGS. PIER 4 SPAN 5	25.878	26.031	26.087
℄ BRGS. PIER 5	25.425	25.578	25.634
℄ BRGS. SOUTH ABUTMENT	24.902	25.054	25.110

ILLINOIS DIVISION OF HIGHWAYS
CALUMET-SAG NAVIGATION PROJECT
96TH AVENUE HIGHWAY BRIDGE

FRAMING PLAN & BEARING DETAILS
SPANS 1, 2, 3, 5 & 6 (E & W)

SCALE: AS NOTED — DATE: JUNE 18, 1965

ALFRED BENESCH & COMPANY
10 SOUTH WABASH AVE
CONSULTING ENGINEERS
CHICAGO, ILLINOIS

Rev. 2-9-66 Handrail Post and Diaphragm Spacing L.W.

MODEL: Default
FILE NAME: pw:\\uhsnroom.dot.illinois.gov:PWIDOT\Documents\IDOT Offices\District 1\Projects\D118521\CADData\Design\D118521-sht-details.dgn

USER NAME = mullaneco	DESIGNED -	REVISED -	
	DRAWN -	REVISED -	
PLOT SCALE = 100.0000 ' / in.	CHECKED -	REVISED -	
PLOT DATE = 8/10/2021	DATE -	REVISED -	

STATE OF ILLINOIS
DEPARTMENT OF TRANSPORTATION

EXISTING BRIDGE PLANS
FRAMING PLAN AND BEARING DETAILS

SCALE: | SHEET OF SHEETS | STA. TO STA.

F.A.P. RTE.	SECTION	COUNTY	TOTAL SHEETS	SHEET NO.
330	2021-096-BP	COOK	29	12
		CONTRACT NO. 62P24		
		ILLINOIS	FED. AID PROJECT	

ROUTE NO.	SECTION	COUNTY	TOTAL SHEETS	SHEET NO.
S.B.I.51	511-B-C-R	COOK	70	22
STA.		TO STA.		
S.P.R. AREA NO. 4	ILLINOIS	PROJECT		

SHEET 9 OF 80

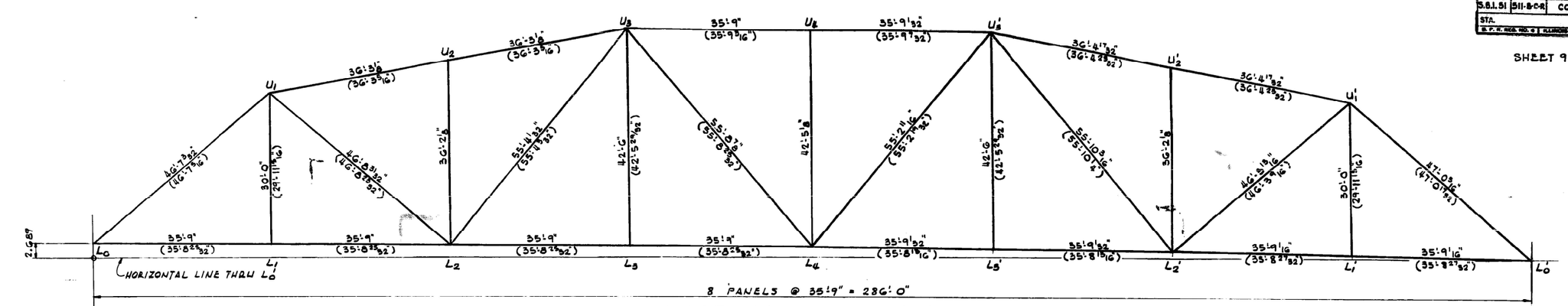

WEST ELEVATION OF TRUSS

SHOWING THEORETICAL LENGTH OF MEMBERS. FIGURES SHOWN IN BRACKETS ARE THEORETICAL LENGTH OF MEMBER CORRECTED FOR STRAIN DUE TO DEAD LOAD.

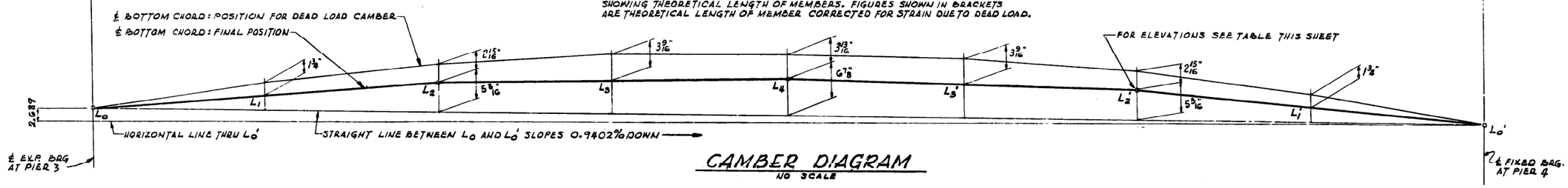

CAMBER DIAGRAM

NO SCALE

ELEVATIONS

PANEL POINT	TOP OF CROWN	℄ BOTTOM CHORD
L_0	29.359	26.317
L_1	29.275	26.197
L_2	29.118	26.076
L_3	28.890	25.812
L_4	28.590	25.548
L_3'	28.218	25.140
L_2'	27.774	24.732
L_1'	27.258	24.180
L_0'	26.670	23.628

ILLINOIS DIVISION OF HIGHWAYS
CALUMET SAG NAVIGATION PROJECT
96TH AVENUE HIGHWAY BRIDGE

TRUSS ELEVATION & STRESS TABLE

SCALE: AS NOTED

DATE: JUNE 18, 1965

ALFRED BENESCH & COMPANY CONSULTING ENGINEERS
10 SOUTH WABASH AVENUE CHICAGO, ILLINOIS

MODEL: Default
FILE NAME: pw:\\pwinroom.dot.illinois.gov:PWIDOT\Documents\IDOT Offices\District 1\Projects\D118521\CADData\Design\D118521-sht-detail&c.dgn

USER NAME = mullaneed	DESIGNED -	REVISED -	
	DRAWN -	REVISED -	
PLOT SCALE = 100.0000 ' / in.	CHECKED -	REVISED -	
PLOT DATE = 8/10/2021	DATE -	REVISED -	

STATE OF ILLINOIS
DEPARTMENT OF TRANSPORTATION

EXISTING BRIDGE PLANS
TRUSS EELEVATIONS

SCALE: | SHEET OF SHEETS | STA. TO STA.

F.A.P. RTE.	SECTION	COUNTY	TOTAL SHEETS	SHEET NO.
330	2021-096-BP	COOK	29	13
		CONTRACT NO. 62P24		
	ILLINOIS	FED. AID PROJECT		

ROUTE NO.	SECTION	COUNTY	TOTAL SHEETS	SHEET NO.
S.B.I. 51	511 B-C-R	COOK	70	23
STA.	TO STA.			
B. P. R. REQ. NO. 4	ILLINOIS	PROJECT		

SHEET 10 OF 30

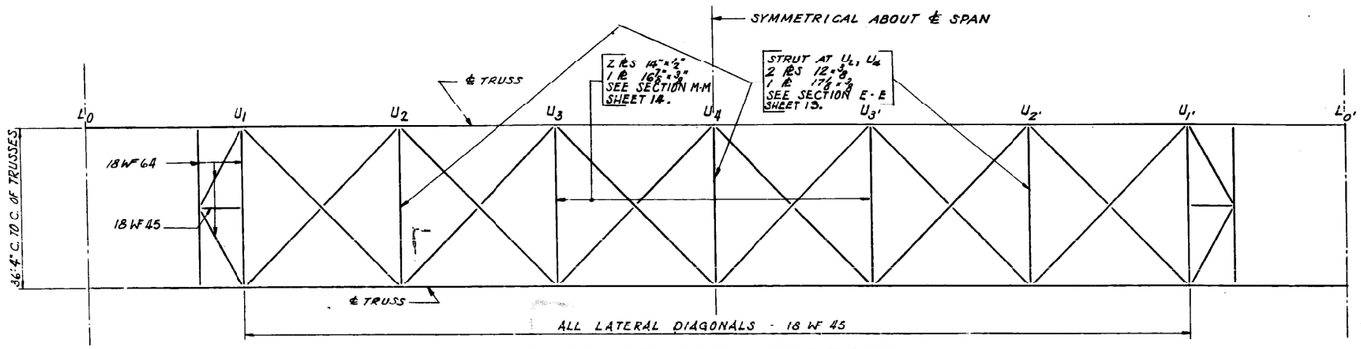

PLAN OF TOP LATERALS

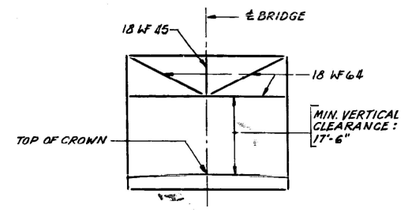

L_0U_1; $L_0'U_1'$
PORTAL FRAME

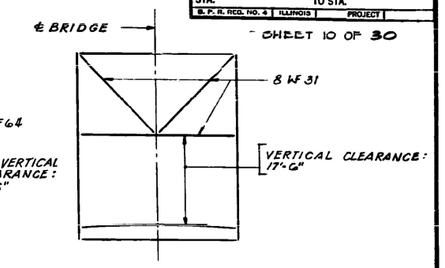

L_3U_3, $L_3'U_3'$
SWAY FRAME

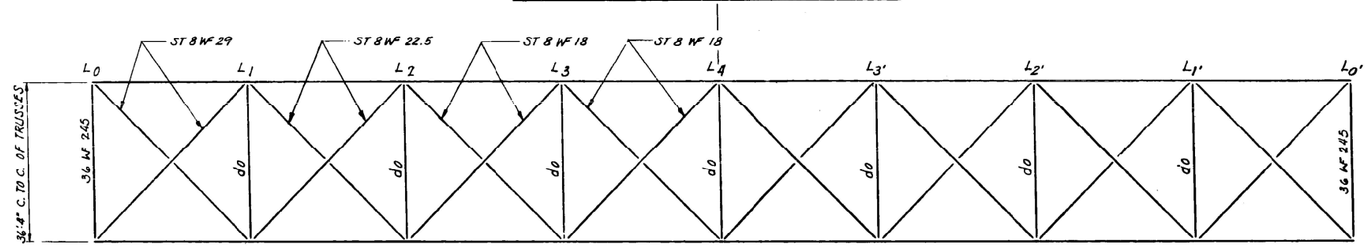

PLAN OF BOTTOM LATERALS

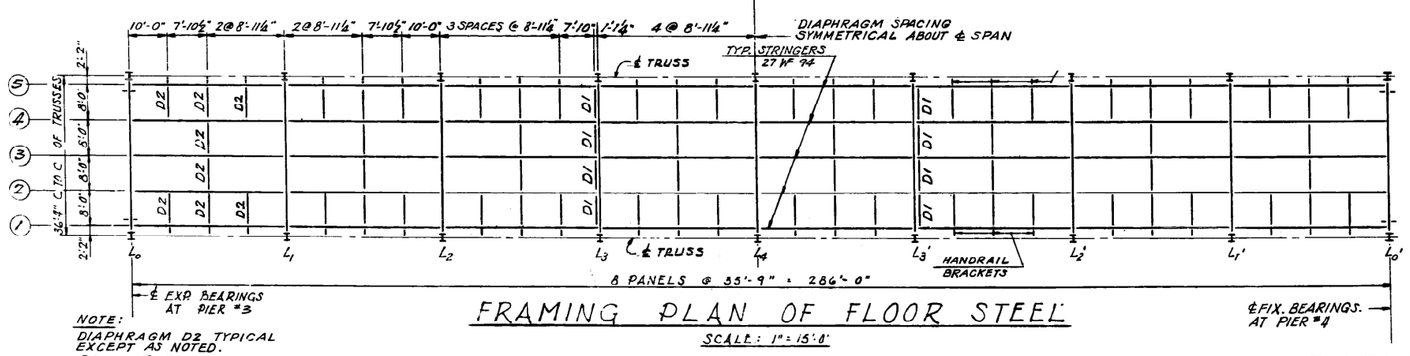

FRAMING PLAN OF FLOOR STEEL

SCALE: 1" = 15'-0"

NOTE:
DIAPHRAGM D2 TYPICAL EXCEPT AS NOTED.
D1 - 12 WF 40
D2 - 12 WF 36

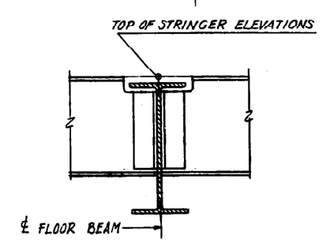

NOTES:
FOR GENERAL NOTES SEE SHEET 2.
FOR ADDITIONAL NOTES SEE SHEET 13.

ILLINOIS DIVISION OF HIGHWAYS
CALUMET-SAG NAVIGATION PROJECT
96TH AVENUE HIGHWAY BRIDGE

FRAMING PLAN - SPAN 4 (E.&W.)

SCALE AS NOTED — DATE: JUNE 18, 1965

ALFRED BENESCH & COMPANY
10 SOUTH WABASH AVE
CONSULTING ENGINEERS
CHICAGO, ILLINOIS

8

MODEL: Default
FILE NAME: pw:\\pwmaxim.dot.illinois.gov:PWIDOT\Documents\IDOT Offices\District 1\Projects\D118521\CADData\Design\D118521-sht-detail.dgn

USER NAME = mullaneco	DESIGNED -	REVISED -	
	DRAWN -	REVISED -	
PLOT SCALE = 100.0000 ' / in.	CHECKED -	REVISED -	
PLOT DATE = 8/10/2021	DATE -	REVISED -	

STATE OF ILLINOIS
DEPARTMENT OF TRANSPORTATION

EXISTING BRIDGE PLANS
FRAMING PLAN

SCALE: | SHEET OF SHEETS | STA. TO STA.

F.A.P. RTE.	SECTION	COUNTY	TOTAL SHEETS	SHEET NO.
330	2021-096-BP	COOK	29	14
		CONTRACT NO. 62P24		
		ILLINOIS	FED. AID PROJECT	

ROUTE NO.	SECTION	COUNTY	TOTAL SHEETS	SHEET NO.
F.A.I. 51	511-B-C-R	COOK	70	28
STA.		TO STA.		
S. P. R. REQ. NO. 4	ILLINOIS	PROJECT		

SHEET 11 OF 30

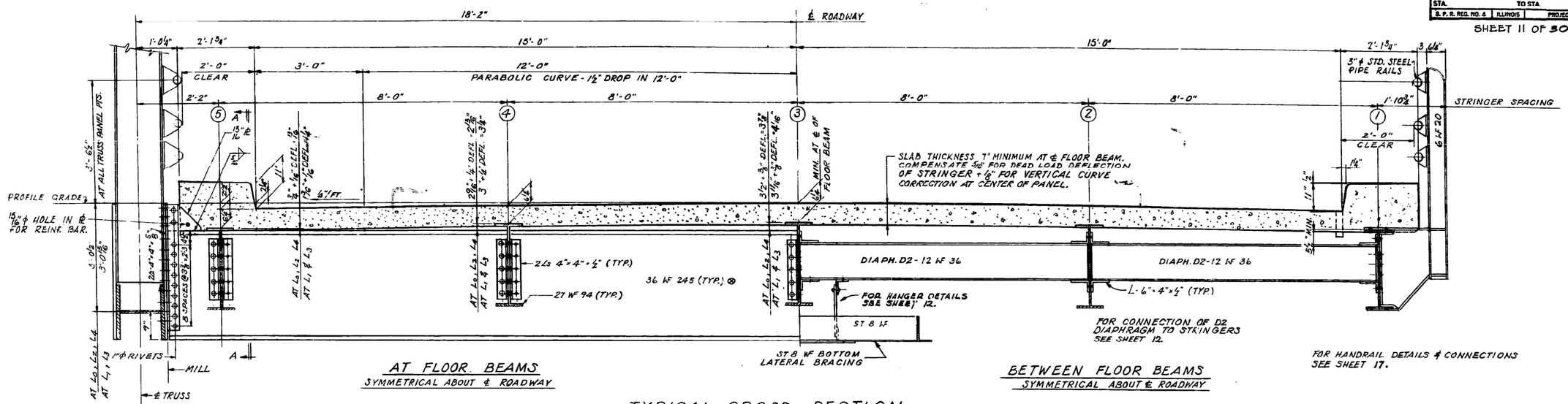

TYPICAL CROSS SECTION

SCALE: ¾" = 1'-0"

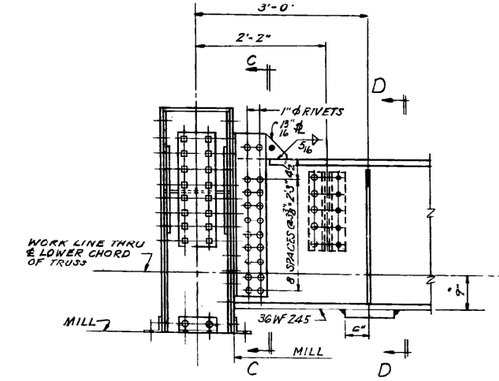

END FLOOR BEAM CONNECTION

SCALE: ¾" = 1'-0"

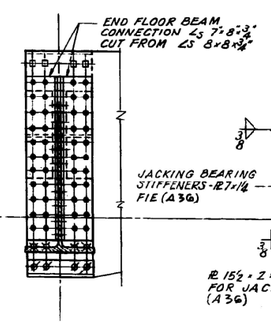

SECTION C-C

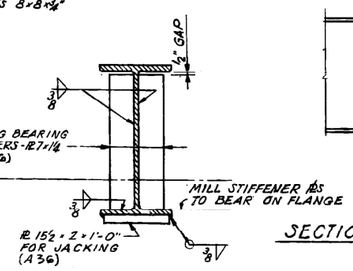

SECTION D-D

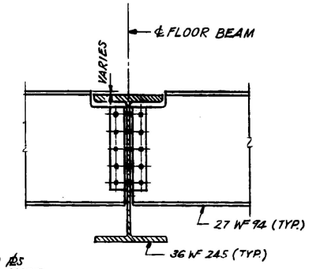

SECTION A-A FOR TYPICAL STRINGERS

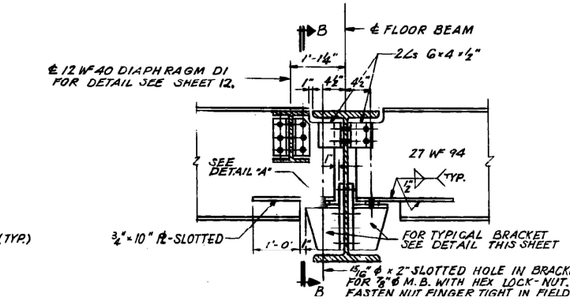

SECTION A-A AT L_3 & L_3'

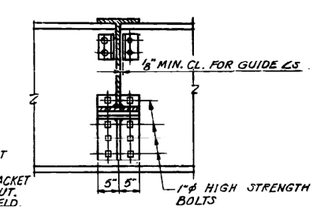

SECTION B-B

STRINGER TO FLOOR BEAM CONNECTION

SCALE: ¾" = 1'-0"

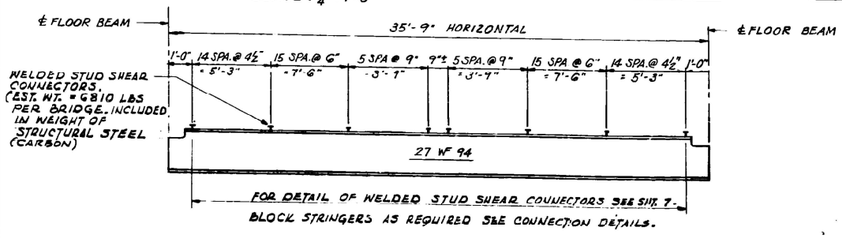

SHEAR CONNECTOR SPACING

NO SCALE

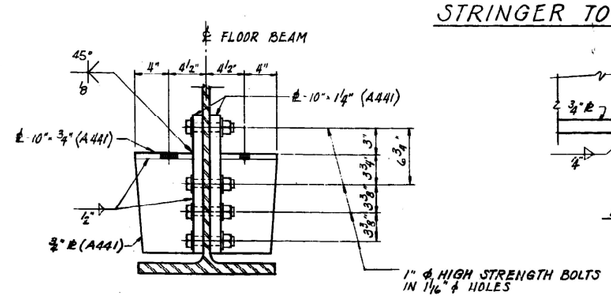

DETAIL OF BRACKET FOR SLIP STRINGER

SCALE: 1½" = 1'-0"

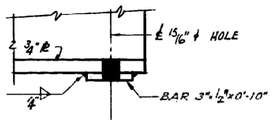

DETAIL "A"

SCALE: 3" = 1'-0"

ALFRED BENESCH & COMPANY
10 SOUTH WABASH AVE

CONSULTING ENGINEERS
CHICAGO, ILLINOIS

ILLINOIS DIVISION OF HIGHWAYS
CALUMET-SAG NAVIGATION PROJECT
96TH AVENUE HIGHWAY BRIDGE

CROSS SECTION & DETAILS SPAN 4 (E&W)

SCALE AS NOTED

DATE: JUNE 18, 1965

USER NAME = mullanecd	DESIGNED -	REVISED -
	DRAWN -	REVISED -
PLOT SCALE = 100.0000 ' / in.	CHECKED -	REVISED -
PLOT DATE = 8/10/2021	DATE -	REVISED -

STATE OF ILLINOIS
DEPARTMENT OF TRANSPORTATION

EXISTING BRIDGE PLANS
CROSS SECTION DETAILS

SCALE: | SHEET OF SHEETS | STA. TO STA.

F.A.P. RTE.	SECTION	COUNTY	TOTAL SHEETS	SHEET NO.
330	2021-096-BP	COOK	29	15
		CONTRACT NO. 62P24		
		ILLINOIS	FED. AID PROJECT	

MODEL: Default
FILE NAME: pw:\\ildanroom.dot.illinois.gov:PWIDOT\Documents\IDOT Offices\District 1\Projects\D118521\CADData\Design\D118521-sht-details.dgn

ROUTE NO.	SECTION	COUNTY	TOTAL SHEETS	SHEET NO.
S.B.I. 51	51-B-C-2	COOK	70	25
STA.		TO STA.		
B.P.R. REG. NO. 6	ILLINOIS	PROJECT		

SHEET 12 OF 30

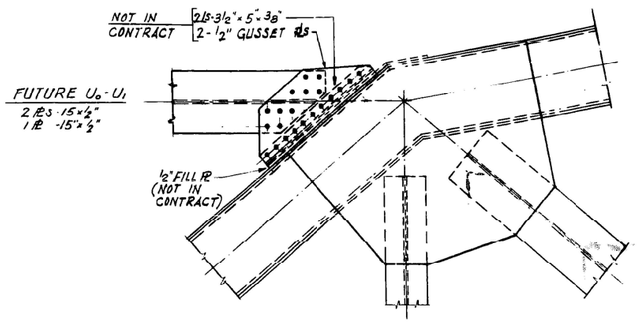

DETAIL AT U_1 FOR FUTURE U_0-U_1 CONNECTION
DETAIL AT U_1' SIMILAR
SCALE: 3/4"=1'-0"

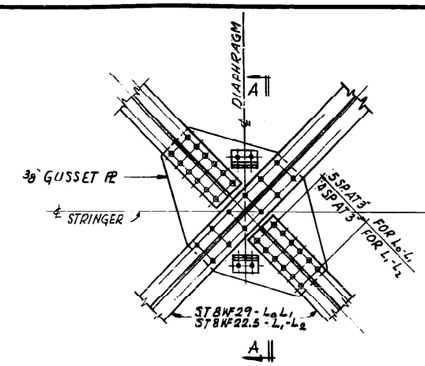

L_0 - THRU L_2

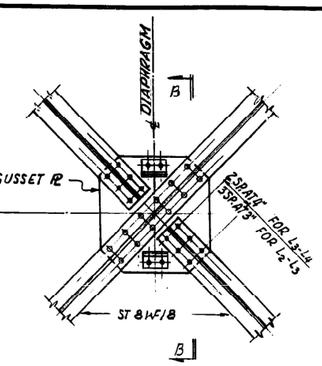

L_2 - THRU L_4

CONNECTION OF BOTTOM LATERAL BRACING
SCALE: 3/4" = 1'-0"

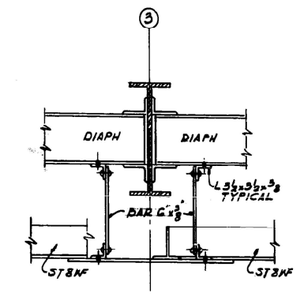

SECTION A-A
SECTION B-B (SIMILAR)
SCALE 3/4"=1'-0"

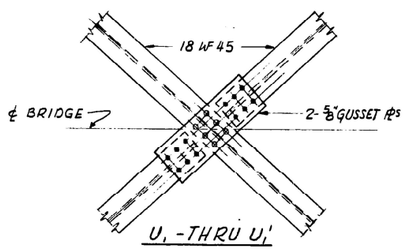

U_1 - THRU U_1'

CONNECTION OF TOP LATERAL BRACING
SCALE: 3/4"=1'-0"

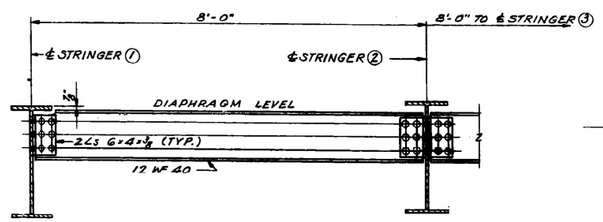

D1 - DIAPHRAGM AT L_3 & L_3'
SCALE: 3/4" = 1'-0"

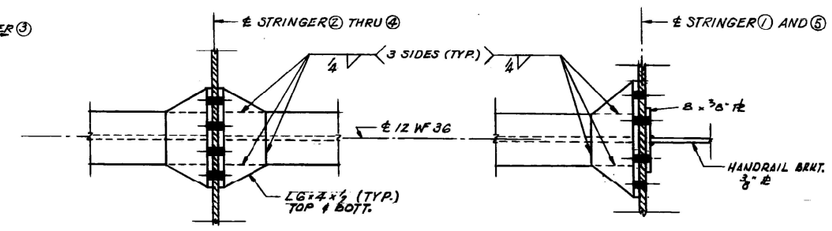

D2 - DIAPHRAGM CONNECTIONS
SCALE: 1½" = 1'-0"

ILLINOIS DIVISION OF HIGHWAYS
CALUMET-SAG NAVIGATION PROJECT
96TH AVENUE HIGHWAY BRIDGE

MISCELLANEOUS TRUSS DETAILS

SCALE AS NOTED

DATE: JUNE 18, 1965

ALFRED BENESCH & COMPANY
10 SOUTH WABASH AVE

CONSULTING ENGINEERS
CHICAGO, ILLINOIS

MODEL: Default
FILE NAME: pw:\\illinoisdot.bentleyconnect.com:PWIDOT\Documents\IDOT Offices\District 1\Projects\D118521\CADData\Design\D118521-sht-details.dgn

USER NAME = mullanecd	DESIGNED -	REVISED -	
	DRAWN -	REVISED -	
PLOT SCALE = 100.0000 ' / in.	CHECKED -	REVISED -	
PLOT DATE = 8/10/2021	DATE -	REVISED -	

STATE OF ILLINOIS
DEPARTMENT OF TRANSPORTATION

EXISTING BRIDGE PLANS
MISCELLANEOUS TRUSS DETAILS

SCALE: | SHEET OF SHEETS | STA. TO STA.

F.A.P. RTE.	SECTION	COUNTY	TOTAL SHEETS	SHEET NO.
330	2021-096-BP	COOK	29	16
		CONTRACT NO. 62P24		
	ILLINOIS	FED. AID PROJECT		

ROUTE NO.	SECTION	COUNTY	TOTAL SHEETS	SHEET NO.
S.B.I. 51	511-B-C-R	COOK	70	26
STA.		TO STA.		
E.P.E. REG. NO. 4	ILLINOIS	PROJECT		

SHEET 13 OF 30

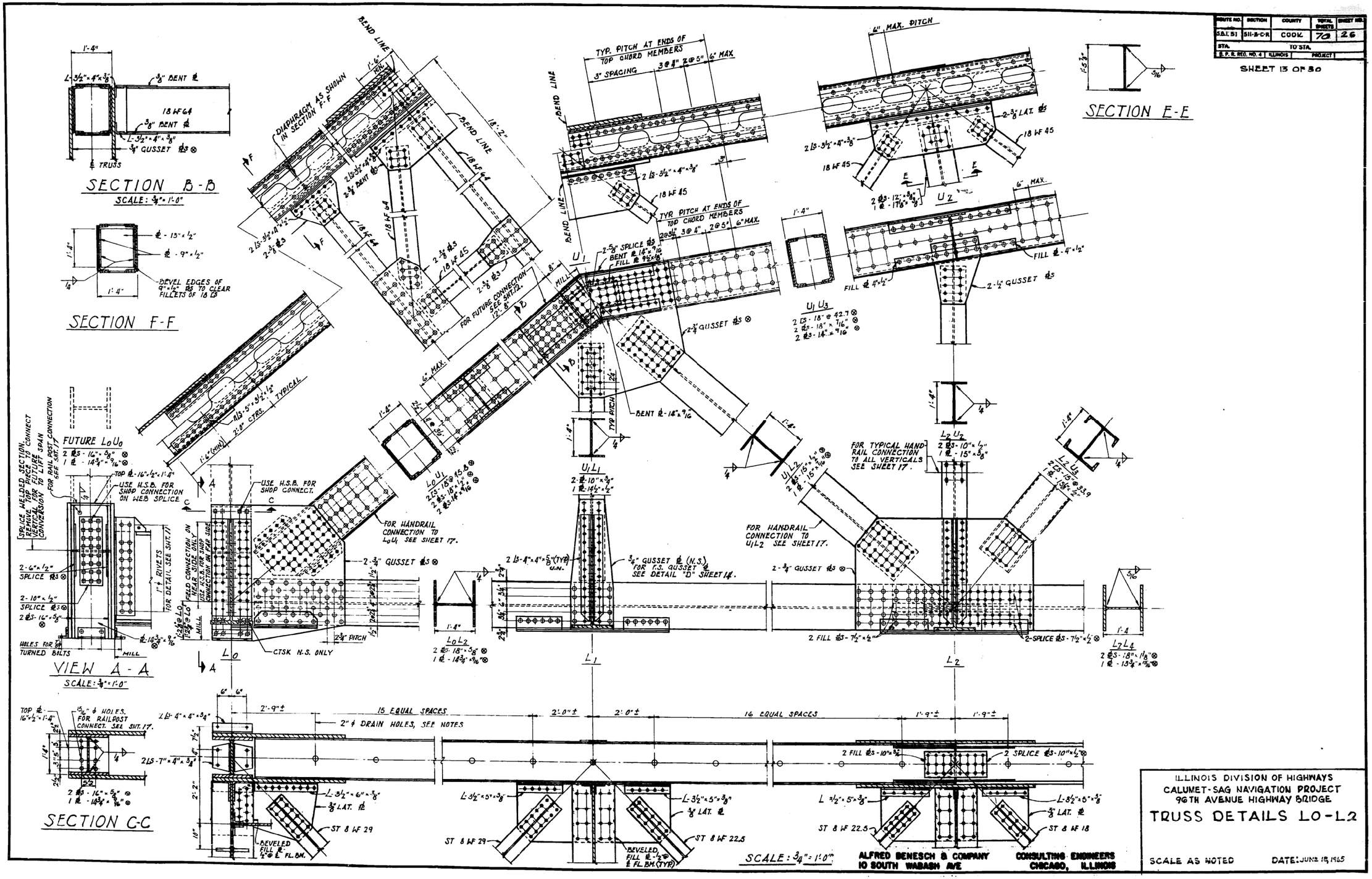

ILLINOIS DIVISION OF HIGHWAYS
CALUMET-SAG NAVIGATION PROJECT
96TH AVENUE HIGHWAY BRIDGE

TRUSS DETAILS L0-L2

SCALE AS NOTED

DATE: JUNE 15, 1965

USER NAME = mullanecd	DESIGNED -	REVISED -
	DRAWN -	REVISED -
PLOT SCALE = 100.0000 ' / in.	CHECKED -	REVISED -
PLOT DATE = 8/10/2021	DATE -	REVISED -

STATE OF ILLINOIS
DEPARTMENT OF TRANSPORTATION

EXISTING BRIDGE PLANS
TRUSS DETAILS

SCALE: | SHEET OF SHEETS | STA. TO STA.

F.A.P. RTE.	SECTION	COUNTY	TOTAL SHEETS	SHEET NO.
330	2021-096-BP	COOK	29	17

CONTRACT NO. 62P24

ILLINOIS FED. AID PROJECT

MODEL: Default
FILE NAME: pw:\\uborroom.dot.illinois.gov:PWIDOT\Documents\IDOT Offices\District 1\Projects\D118521\CADData\Design\D118521-sht-details.dgn

ROUTE NO.	SECTION	COUNTY	TOTAL SHEETS	SHEET NO.
S.B.I. 51	511-B-C-12	COOK	70	27
STA.	TO STA.			
B.F.R. BRR. NO. 4	ILLINOIS	PROJECT		

SHEET 14 OF 30

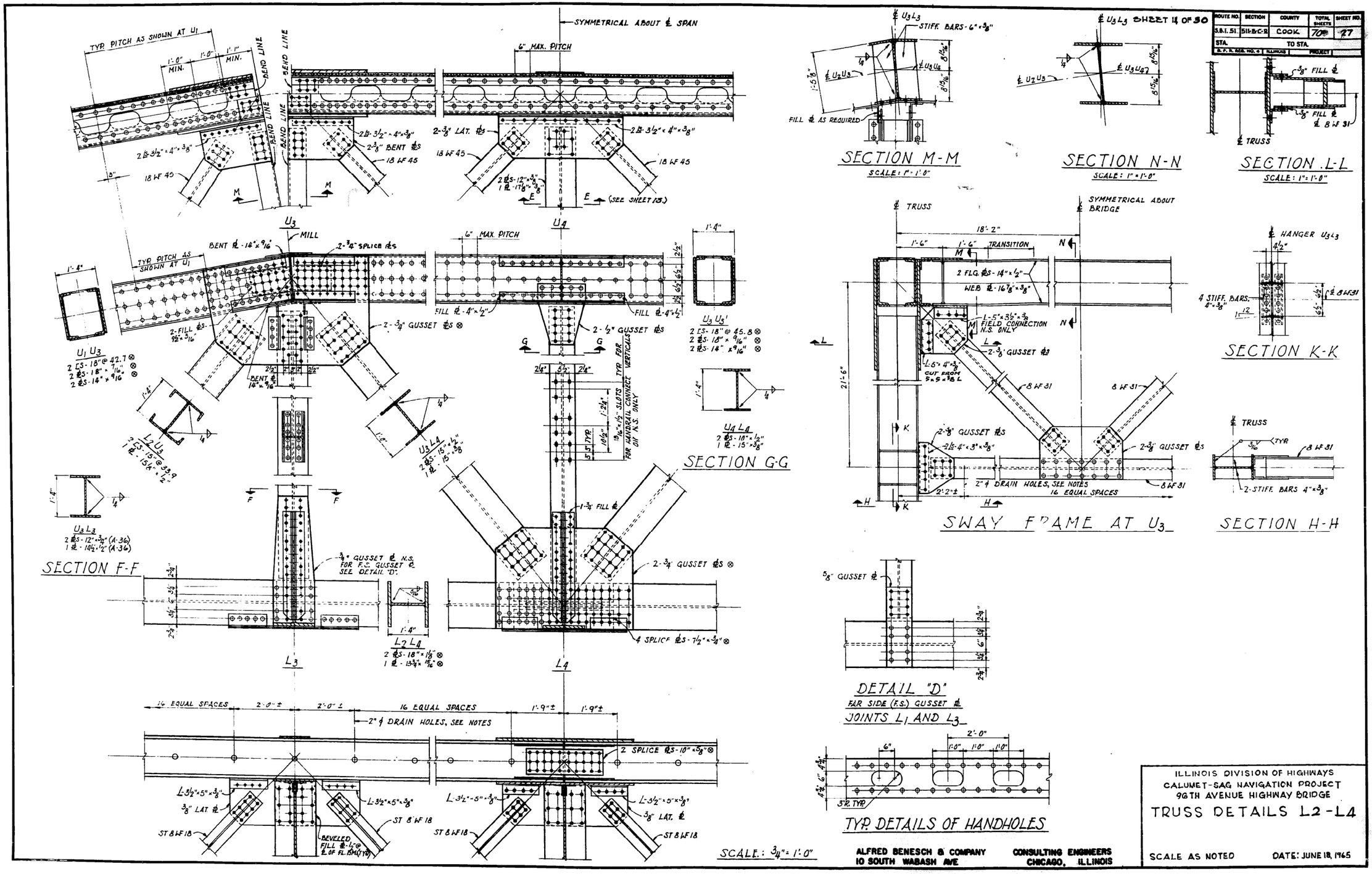

ILLINOIS DIVISION OF HIGHWAYS
CALUMET-SAG NAVIGATION PROJECT
96TH AVENUE HIGHWAY BRIDGE

TRUSS DETAILS L2-L4

SCALE AS NOTED

DATE: JUNE 18, 1965

ALFRED BENESCH & COMPANY
10 SOUTH WABASH AVE

CONSULTING ENGINEERS
CHICAGO, ILLINOIS

MODEL: Default
FILE NAME: pw:\\ildmroom.dot.illinois.gov:PWIDOT\Documents\IDOT Offices\District 1\Projects\D118521\CADData\Design\D118521-sht-details.dgn

USER NAME = mullanecd	DESIGNED -	REVISED -	
	DRAWN -	REVISED -	
PLOT SCALE = 100.0000 ' / in.	CHECKED -	REVISED -	
PLOT DATE = 8/10/2021	DATE -	REVISED -	

STATE OF ILLINOIS
DEPARTMENT OF TRANSPORTATION

EXISTING BRIDGE PLANS
TRUSS DETAILS

SCALE: | SHEET OF SHEETS | STA. | TO STA.

F.A.P. RTE.	SECTION	COUNTY	TOTAL SHEETS	SHEET NO.
330	2021-096-BP	COOK	29	18
		CONTRACT NO. 62P24		
		ILLINOIS	FED. AID PROJECT	

ROUTE NO.	SECTION	COUNTY	TOTAL SHEETS	SHEET NO.
S.B.I. 51	51-2-2-C-2	COOK	70	28
STA.		TO STA.		
S.F.N. REG. NO. 4	ILLINOIS	PROJECT		

SHEET 15 OF 30

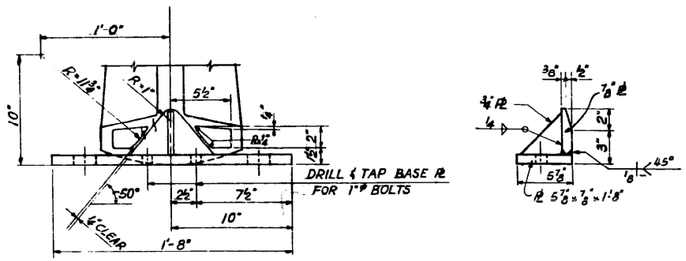

DETAIL OF GUIDE LUGS
SCALE: 2" = 1'-0"

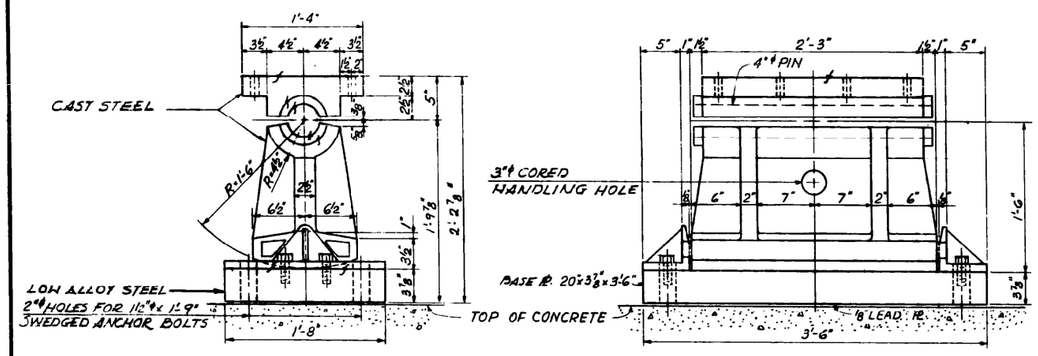

EXPANSION SHOES AT POINT L_0
SCALE: 1½" = 1'-0"

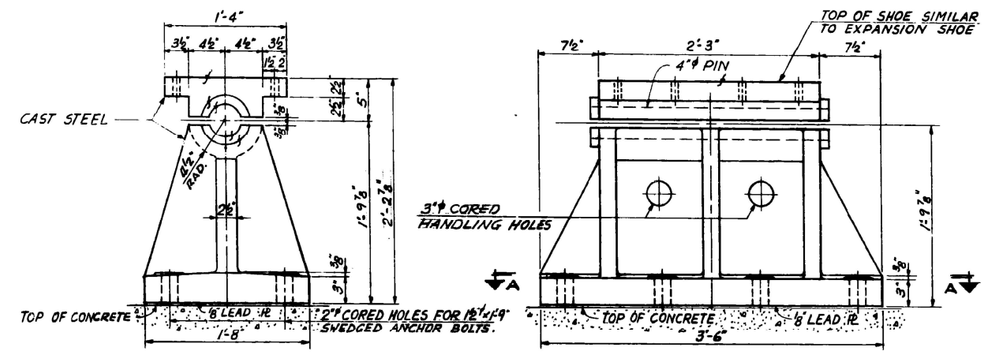

FIXED SHOES AT POINT L_0'
SCALE: 1½" = 1'-0"

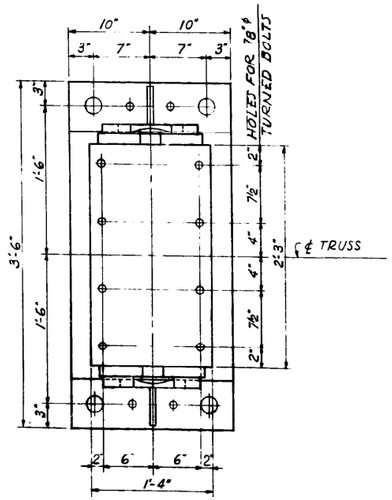

PLAN OF BASE PL
SCALE: 1½" = 1'-0"

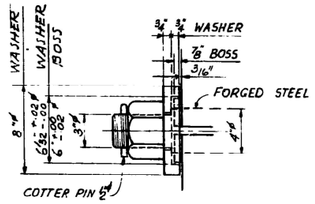

PIN DETAIL
SCALE: 2" = 1'-0"

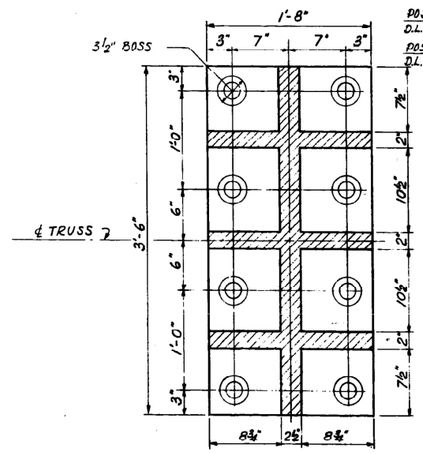

SECTION A-A
SCALE: 1½" = 1'-0"

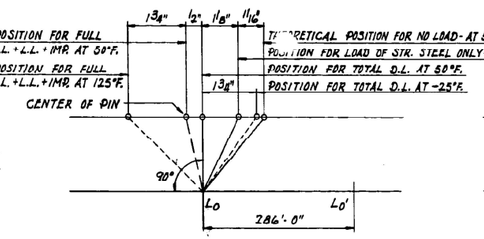

FOR LOADING CONDITIONS

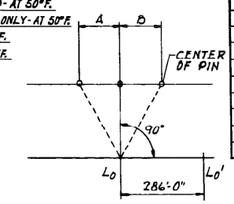

TEMP	A	B
110°F	1 3/8"	-
95°	1"	-
80°	11/16"	-
65°	3/8"	-
50°	0	0
35°	-	3/8"
20°	-	11/16"
5°	-	1"
-10°	-	1 3/8"

CORRECTION FOR TEMPERATURES

ROCKER SETTINGS
NO SCALE

ILLINOIS DIVISION OF HIGHWAYS
CALUMET-SAG NAVIGATION PROJECT
96TH AVENUE HIGHWAY BRIDGE

TRUSS BEARING DETAILS

SCALE: AS NOTED DATE: JUNE 18, 1965

ALFRED BENESCH & COMPANY
10 SOUTH WABASH AVE

CONSULTING ENGINEERS
CHICAGO, ILLINOIS

USER NAME = mullanecd	DESIGNED -	REVISED -	
	DRAWN -	REVISED -	
PLOT SCALE = 100.0000 ' / in.	CHECKED -	REVISED -	
PLOT DATE = 8/10/2021	DATE -	REVISED -	

STATE OF ILLINOIS
DEPARTMENT OF TRANSPORTATION

EXISTING BRIDGE PLANS
TRUSS BEARING DETAILS

SCALE: SHEET OF SHEETS STA. TO STA.

F.A.P. RTE.	SECTION	COUNTY	TOTAL SHEETS	SHEET NO.
330	2021-096-BP	COOK	29	19
		CONTRACT NO. 62P24		
		ILLINOIS	FED. AID PROJECT	

MODEL: Default
FILE NAME: pw:\\dpwinroom.dot.illinois.gov:PWIDOT\Documents\IDOT Offices\District 1\Projects\D118521\CADData\Design\D118521-sht-details.dgn

F.A.P. RTE.	SECTION	COUNTY	TOTAL SHEETS	SHEET NO.
330	511B-C-R-1	COOK	70	51
STA.		TO STA.		
FED. ROAD DIST. NO.		ILLINOIS FED. AID PROJECT -		

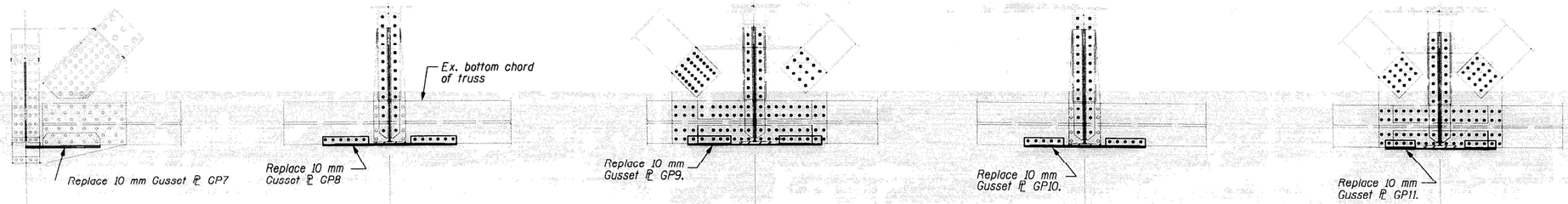

SECTION A-A

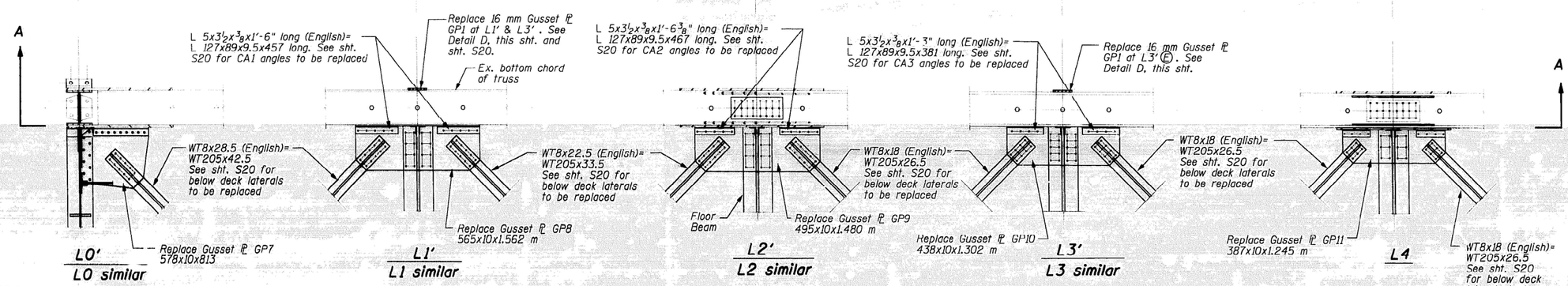

PARTIAL PLAN
BELOW DECK LATERAL BRACING

GP3 Gusset
ℙ 2'-6½x⅜x3'-11¼" (English)=
ℙ 775x10x1.200 m Between truss lines L0'&L1'
GP4 Gusset
ℙ 2'-7⅛x⅜x3'-4¼" (English)=
ℙ 800x10x1.022 m Between truss lines L1'&L2' See sht. S20 for gussets to be replaced

GP5 Gusset
ℙ 2'-5¼x⅜x2'-4½" (English)=
ℙ 743x10x749 m Between truss lines L2'&L3'
GP6 Gusset
ℙ 2'-2⅜x⅜x2'-5½" (English)=
ℙ 699x10x749 m Between truss lines L3'&L4 See sht. S20 for gussets to be replaced

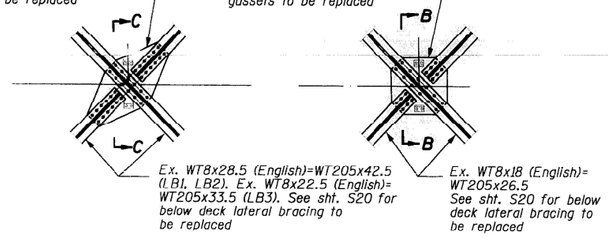

LO' thru L2'

L2' thru L4

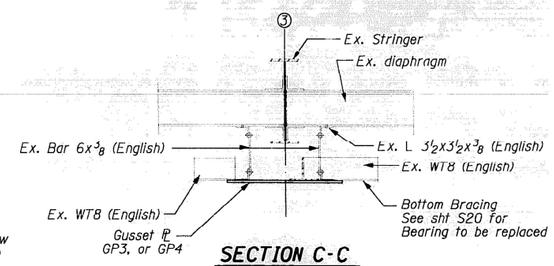

SECTION C-C
SECTION B-B (SIMILAR)

GP1-245x16x787 Gusset PL at L1'
GP2-305x16x787 Gusset PL at L3'

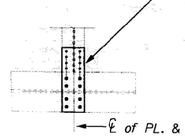

DETAIL D- GUSSET ℙ GP1,GP2

JOINTS L1' E. & L3' E., NB

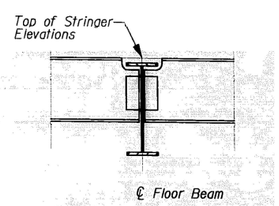

STRINGER ELEVATIONS

REVISIONS	
NAME	DATE
Dan Filice	06-20-00

ILLINOIS DEPARTMENT OF TRANSPORTATION
STEEL FRAMING REPAIR DETAILS
NORTHBOUND & SOUTHBOUND
U.S. ROUTE 45 OVER CAL SAG CHANNEL
FAP 330 SECTION 511B-C-R-1
COOK COUNTY STATION 1+687.200
STRUCTURE NO. 016-0343 (SB)
STRUCTURE NO. 016-0344 (NB)
DRAWN BY D.F.
DATE 04-19-00 CHECKED BY W.A.

MODEL: Default
FILE NAME: pw:\\pwinroom.dot.illinois.gov:PWIDOT\Documents\IDOT Offices\District 1\Projects\D118521\CADData\Design\D118521-sht-details.dgn

USER NAME = mullanecd	DESIGNED -	REVISED -
	DRAWN -	REVISED -
PLOT SCALE = 100.0000 ' / in.	CHECKED -	REVISED -
PLOT DATE = 8/10/2021	DATE -	REVISED -

STATE OF ILLINOIS
DEPARTMENT OF TRANSPORTATION

EXISTING BRIDGE PLANS
STEEL FRAMING REPAIR DETAILS

SCALE: SHEET OF SHEETS STA. TO STA.

F.A.P. RTE.	SECTION	COUNTY	TOTAL SHEETS	SHEET NO.
330	2021-096-BP	COOK	29	20

CONTRACT NO. 62P24

ILLINOIS FED. AID PROJECT

F.A.P. RTE.	SECTION	COUNTY	TOTAL SHEETS	SHEET NO.
330	511B-C-R-1	COOK	70	53
STA.		TO STA.		
FED. ROAD DIST. NO.		ILLINOIS FED. AID PROJECT		

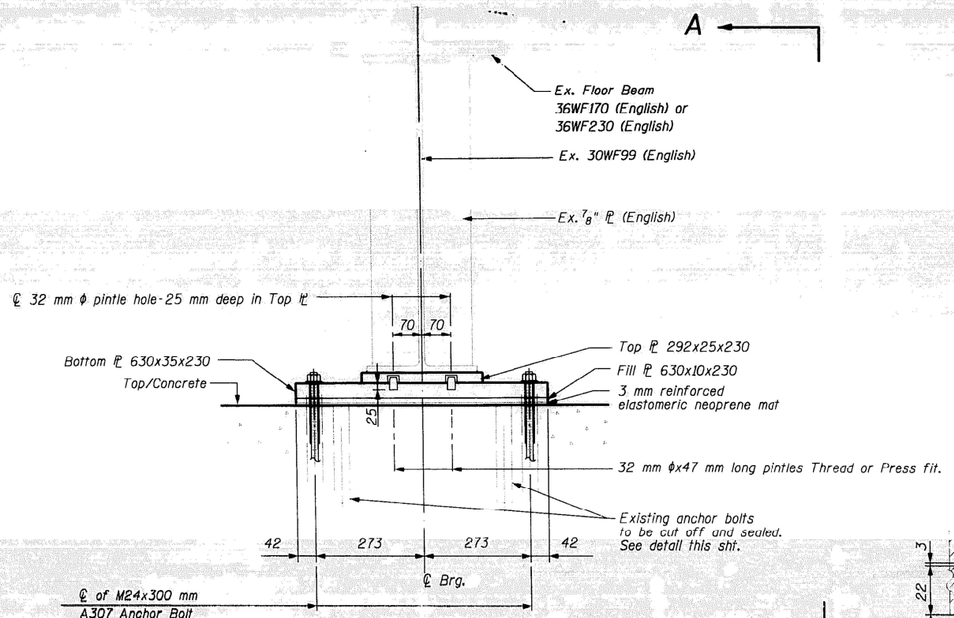

PIERS 2, 3, 4 & 5 - FIXED BEARING

(NORTHBOUND & SOUTHBOUND)
(16 REQUIRED)

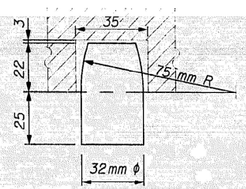

PINTLE DETAIL

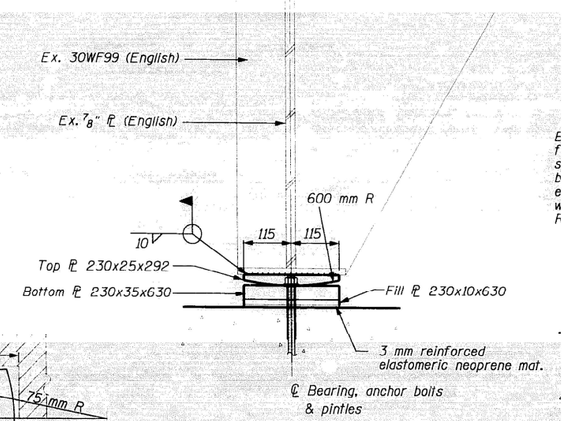

SECTION A-A

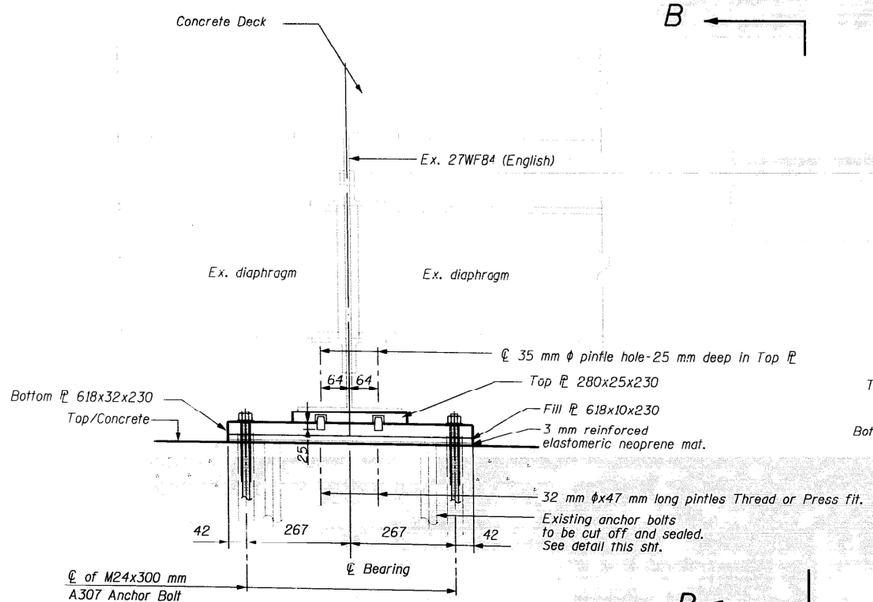

PIER 1 - FIXED BEARING

(NORTHBOUND & SOUTHBOUND)
(10 REQUIRED)

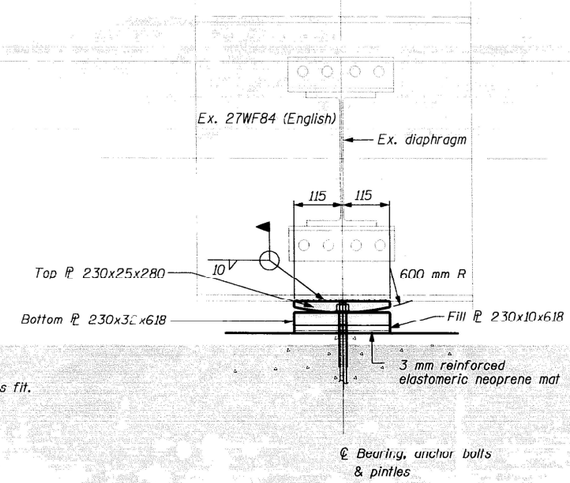

SECTION B-B

REVISIONS	
NAME	DATE
Dan Filice	06-20-00

ILLINOIS DEPARTMENT OF TRANSPORTATION
PIER BEARINGS
NORTHBOUND & SOUTHBOUND
U.S. ROUTE 45 OVER CAL SAG CHANNEL
FAP 330 SECTION 511B-C-R-1
COOK COUNTY STATION 1+687.200
STRUCTURE NO. 016-0343 (SB)
STRUCTURE NO. 016-0344 (NB)

DRAWN BY D.F.
DATE 04-19-00 CHECKED BY W.A.

USER NAME = mullanecd	DESIGNED -	REVISED -
	DRAWN -	REVISED -
PLOT SCALE = 100.0000 ' / in.	CHECKED -	REVISED -
PLOT DATE = 8/10/2021	DATE -	REVISED -

STATE OF ILLINOIS
DEPARTMENT OF TRANSPORTATION

EXISTING BRIDGE PLANS
PIER BEARINGS

SCALE: SHEET OF SHEETS STA. TO STA.

F.A.P. RTE.	SECTION	COUNTY	TOTAL SHEETS	SHEET NO.
330	2021-096-BP	COOK	29	21
		CONTRACT NO. 62P24		
		ILLINOIS FED. AID PROJECT		

MODEL: Default
FILE NAME: pw:\\pwinroom.dot.illinois.gov:PWIDOT\Documents\IDOT Offices\District 1\Projects\D118521\CADData\Design\D118521-sht-details.dgn

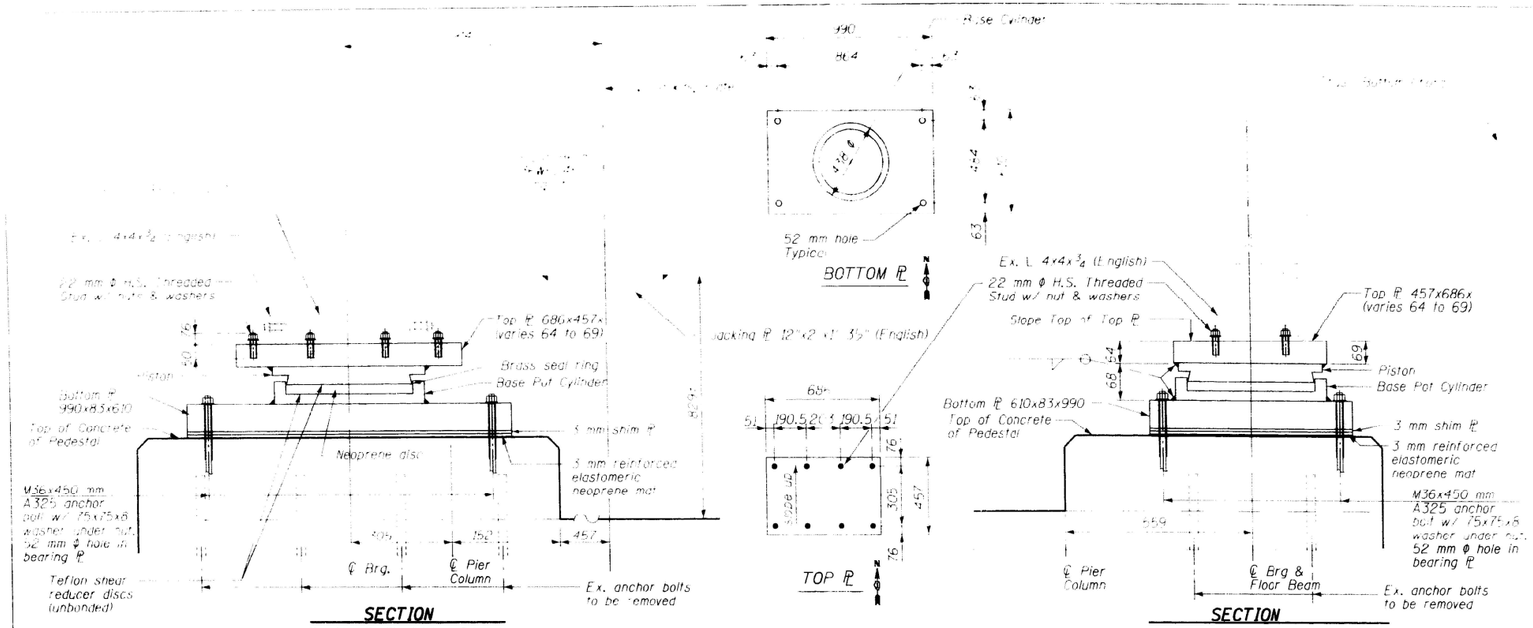

FIXED POT BEARING AT PIER 4

(4 REQUIRED)

*** In alternate to the bolted connection shown, the guide bars may be connected to the top bearing plate by groove welds or the guide bars and the top bearing plate may be fabricated as a single piece.

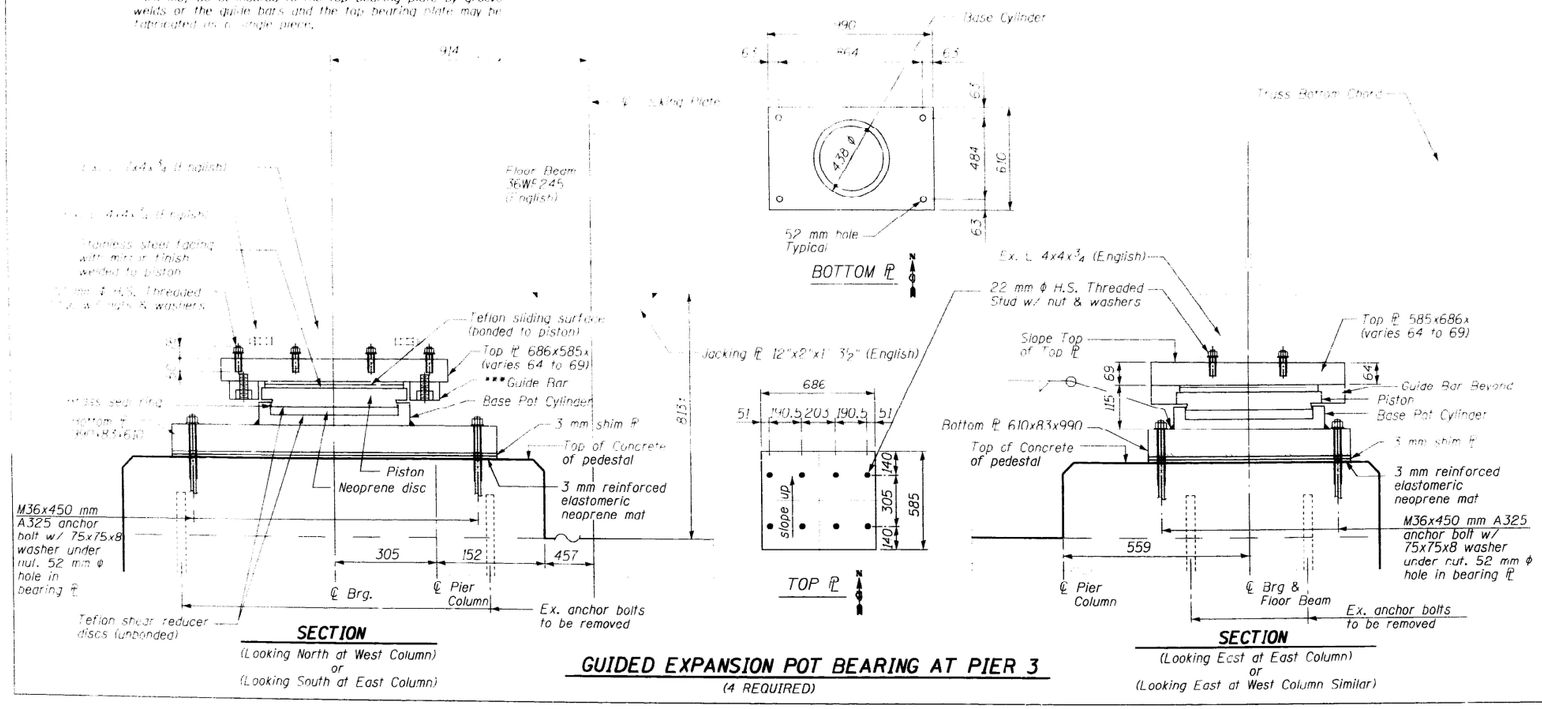

GUIDED EXPANSION POT BEARING AT PIER 3

(4 REQUIRED)

REVISIONS	
NAME	DATE
Chris Burke	06-20-00

ILLINOIS DEPARTMENT OF TRANSPORTATION
TRUSS BEARINGS
NORTHBOUND & SOUTHBOUND
U.S. ROUTE 45 OVER CAL SAG CHANNEL
FAP 330 SECTION 51B-C R 1
COOK COUNTY STATION 1+58.[illegible]
STRUCTURE NO. 016-0343 (SB)
STRUCTURE NO. 016-0344 (NB)
DRAWN BY
DATE 04 19 00 CHECKED N.A.

MODEL: Default
FILE NAME: pw:\\ildinroom.dot.illinois.gov:PWIDOT\Documents\IDOT Offices\District 1\Projects\D118521\CADData\Design\D118521-sht-details.dgn

USER NAME = mullanecd	DESIGNED -	REVISED -	
	DRAWN -	REVISED -	
PLOT SCALE = 100.0000 ' / in.	CHECKED -	REVISED -	
PLOT DATE = 8/10/2021	DATE -	REVISED -	

STATE OF ILLINOIS
DEPARTMENT OF TRANSPORTATION

EXISTING BRIDGE PLANS
TRUSS BEARINGS

SCALE: | SHEET OF SHEETS | STA. TO STA.

F.A.P. RTE.	SECTION	COUNTY	TOTAL SHEETS	SHEET NO.
330	2021-096-BP	COOK	29	22

CONTRACT NO. 62P24

ILLINOIS | FED. AID PROJECT

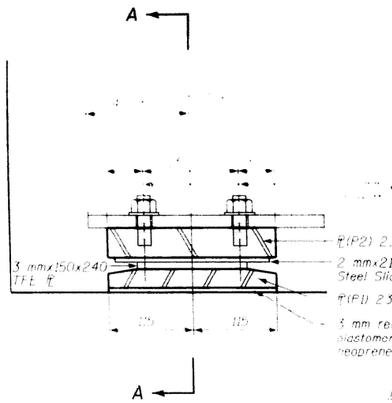

ELEVATION

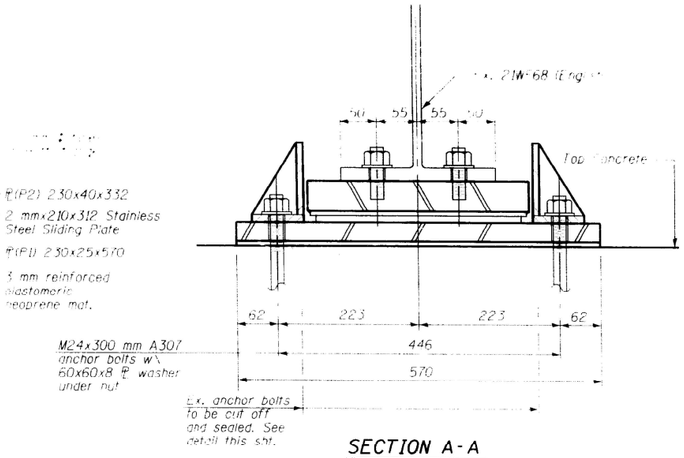

SECTION A-A

SOUTH ABUTMENT-EXPANSION BEARING

(NORTHBOUND AND SOUTHBOUND)
(10-Required)

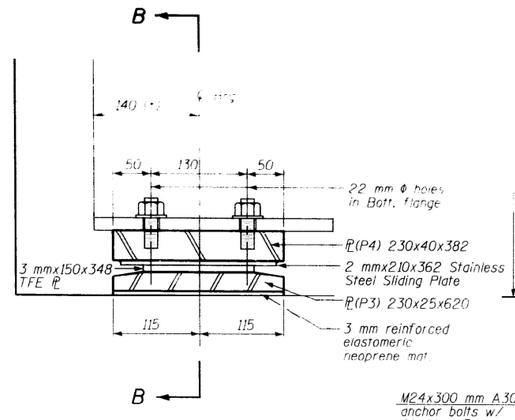

ELEVATION

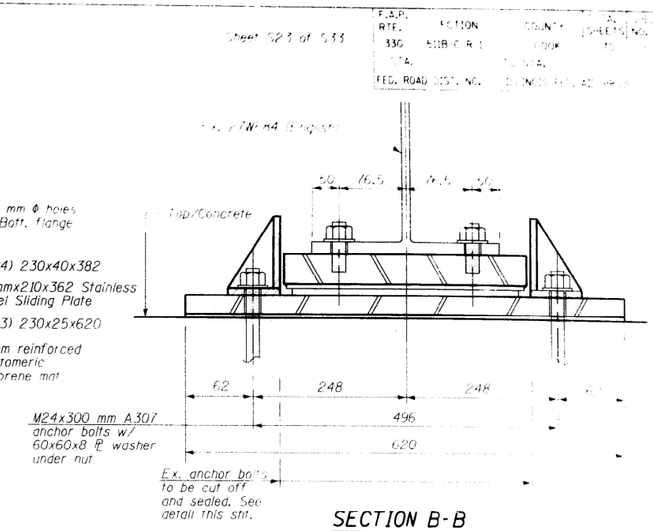

SECTION B-B

NORTH ABUTMENT-EXPANSION BEARING

(NORTHBOUND AND SOUTHBOUND)
(10-Required)

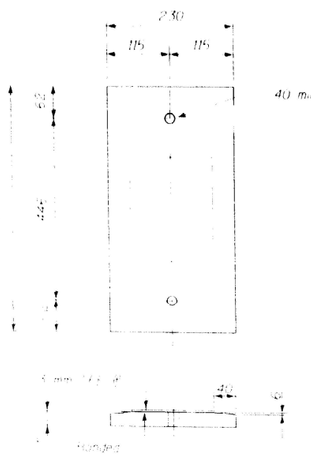

PLATE (P1)

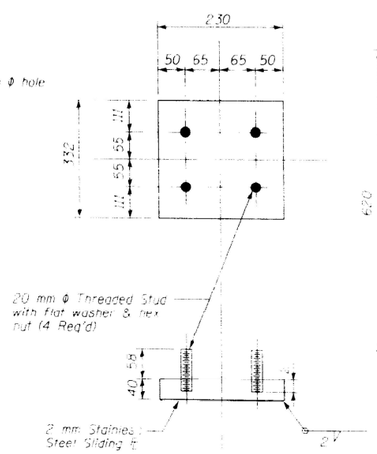

PLATE (P2)

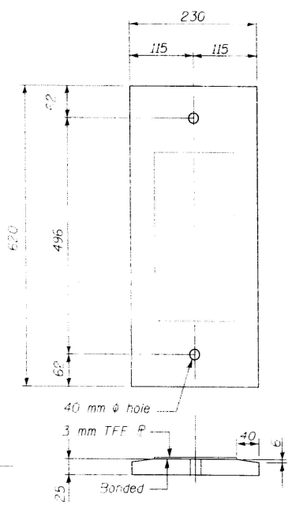

PLATE (P3)

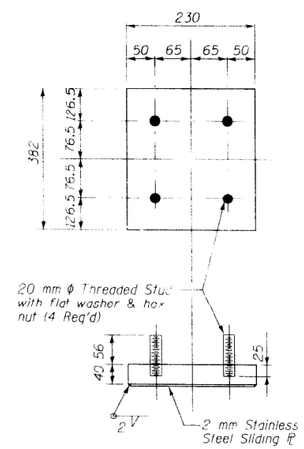

PLATE (P4)

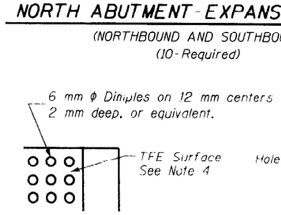

PLAN-TFE SURFACE

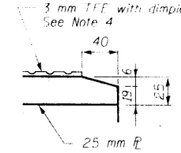

SECTION THRU TFE

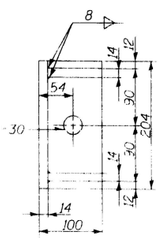

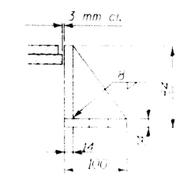

Note:
The Cost For Side Retainers Shall Be Included With The Cost For Furnishing And Erecting Structure.

SIDE RETAINER

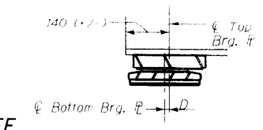

BELOW 10°C
(Move bott. brg. ℄ away from fixed brg.)

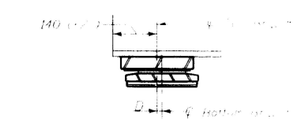

ABOVE 10°C
(Move bott. brg. ℄ toward fixed brg.)

SETTING ANCHOR BOLTS AT EXP. BRG.

D=1 mm per each 10 m of expansion for every 8°C temp. change from the normal temp. of 10°C

REVISIONS	
NAME	DATE
Dan Filice	06-20-00

ILLINOIS DEPARTMENT OF TRANSPORTATION
ABUTMENT BEARINGS
NORTHBOUND & SOUTHBOUND
U.S. ROUTE 45 OVER CAL SAG CHANNEL
FAP 330 SECTION 51B-C-R-1
COOK COUNTY STATION 1+67.2-10
STRUCTURE NO. 016-0343 (SB)
STRUCTURE NO. 016-0344 (NB)
DRAWN BY
DATE 04-19-00 CHECKED BY W.A.

MODEL: Default
FILE NAME: pw:\\uhanroom.dot.illinois.gov:PWIDOT\Documents\IDOT Offices\District 1\Projects\D118521\CADData\Design\D118521-sht-details.dgn

USER NAME = mullanecd	DESIGNED -	REVISED -	
	DRAWN -	REVISED -	
PLOT SCALE = 100.0000 ' / in.	CHECKED -	REVISED -	
PLOT DATE = 8/10/2021	DATE -	REVISED -	

STATE OF ILLINOIS
DEPARTMENT OF TRANSPORTATION

EXISTING BRIDGE PLANS
ABUTMENT BEARINGS

SCALE: SHEET OF SHEETS STA. TO STA.

F.A.P. RTE.	SECTION	COUNTY	TOTAL SHEETS	SHEET NO.
330	2021-096-BP	COOK	29	23
		CONTRACT NO. 62P24		
		ILLINOIS FED. AID PROJECT		

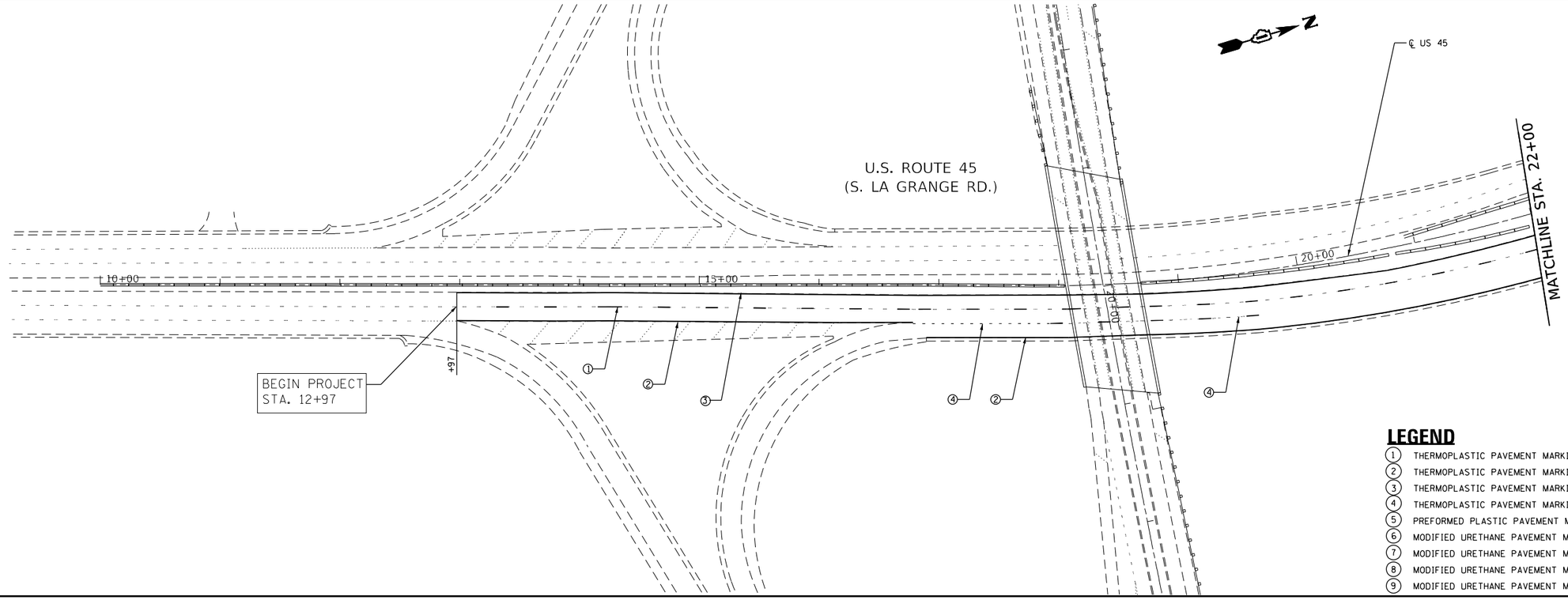

LEGEND

1. THERMOPLASTIC PAVEMENT MARKING - LINE 4" (WHITE, 10'-30' SKIP-DASH)
2. THERMOPLASTIC PAVEMENT MARKING - LINE 4" (SOLID WHITE)
3. THERMOPLASTIC PAVEMENT MARKING - LINE 4" (SOLID YELLOW)
4. THERMOPLASTIC PAVEMENT MARKING - LINE 4" (WHITE, 2'-6' SKIP-DASH)
5. PREFORMED PLASTIC PAVEMENT MARKING TYPE B - LINE 4" (WHITE, 10'-30' SKIP-DASH)
6. MODIFIED URETHANE PAVEMENT MARKING - LINE 4" (SOLID WHITE)
7. MODIFIED URETHANE PAVEMENT MARKING - LINE 4" (SOLID YELLOW)
8. MODIFIED URETHANE PAVEMENT MARKING - LINE 6" (WHITE, 2'-6' SKIP-DASH)
9. MODIFIED URETHANE PAVEMENT MARKING - LINE 6" (SOLID WHITE)

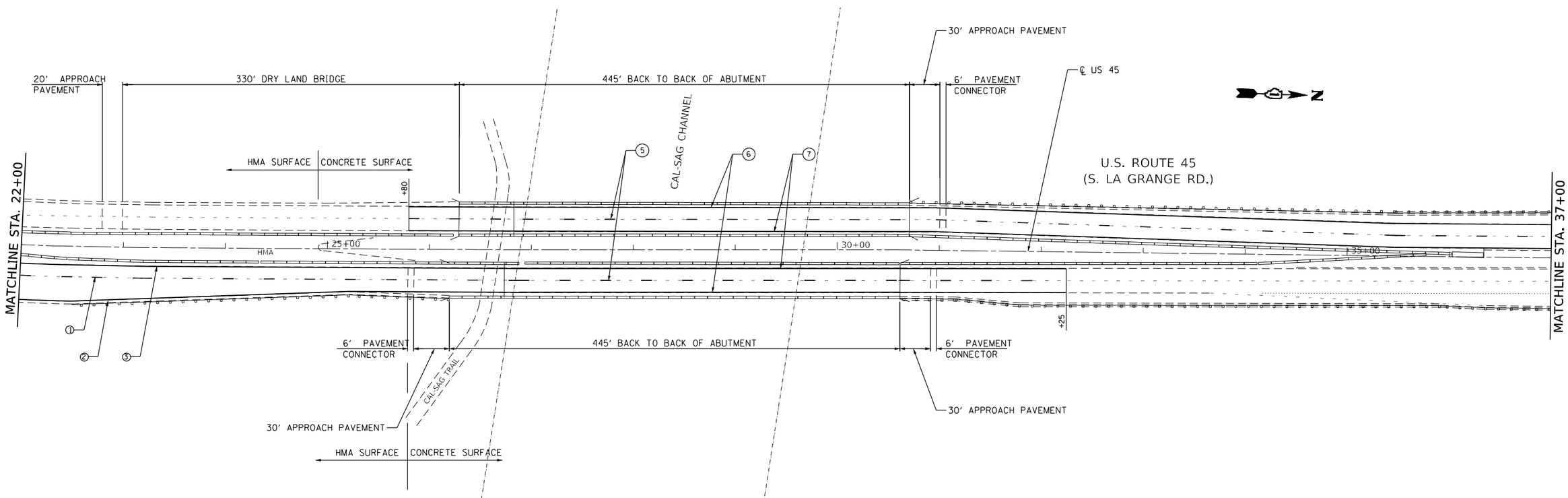

MODEL: Default
FILE NAME: pw:\\dbanroom.dot.illinois.gov:PWIDOT\Documents\IDOT Offices\District 1\Projects\D118521\CADData\Design\D118521-sht-plan.dgn

USER NAME = mullaneo6	DESIGNED -	REVISED -	
	DRAWN -	REVISED -	
PLOT SCALE = 100.0000 ' / in.	CHECKED -	REVISED -	
PLOT DATE = 8/10/2021	DATE -	REVISED -	

STATE OF ILLINOIS
DEPARTMENT OF TRANSPORTATION

PAVEMENT MARKING PLAN
U.S. ROUTE 45 (LA GRANGE RD.) AT CAL-SAG CHANNEL

SCALE: 1"=50' | SHEET 1 OF 2 SHEETS | STA. TO STA.

F.A.P. RTE.	SECTION	COUNTY	TOTAL SHEETS	SHEET NO.
330	2021-096-BP	COOK	29	24
		CONTRACT NO. 62P24		
	ILLINOIS	FED. AID PROJECT		

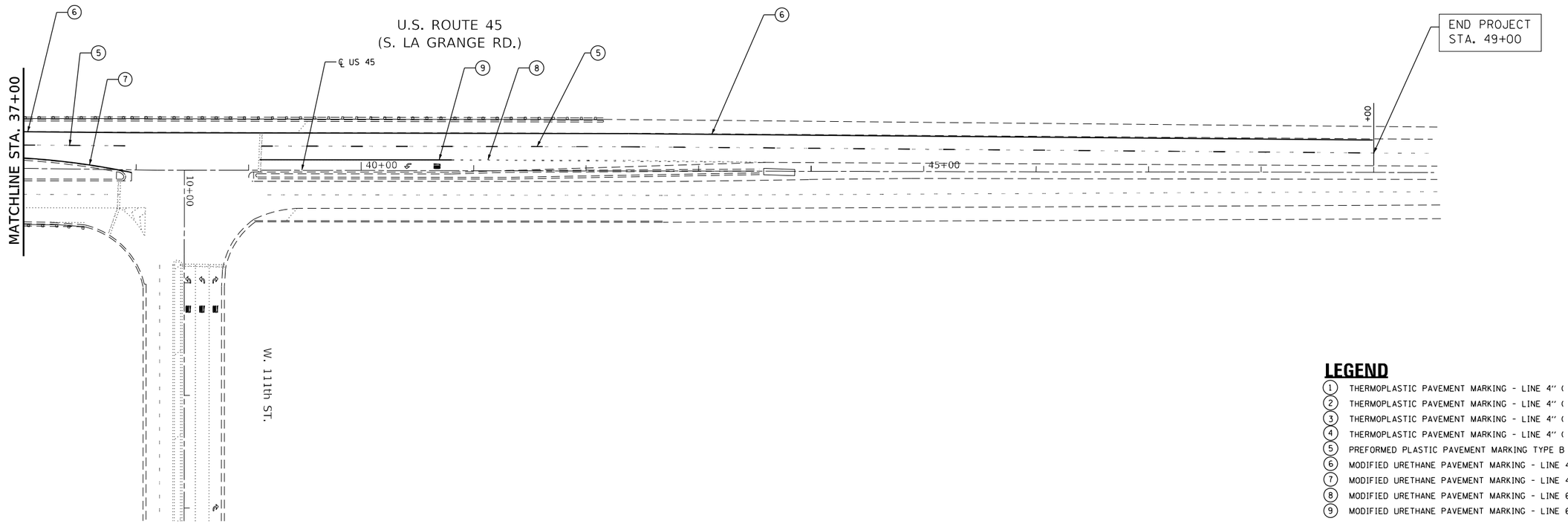

LEGEND

1. THERMOPLASTIC PAVEMENT MARKING - LINE 4" (WHITE, 10'-30' SKIP-DASH)
2. THERMOPLASTIC PAVEMENT MARKING - LINE 4" (SOLID WHITE)
3. THERMOPLASTIC PAVEMENT MARKING - LINE 4" (SOLID YELLOW)
4. THERMOPLASTIC PAVEMENT MARKING - LINE 4" (WHITE, 2'-6' SKIP-DASH)
5. PREFORMED PLASTIC PAVEMENT MARKING TYPE B - LINE 4" (WHITE, 10'-30' SKIP-DASH)
6. MODIFIED URETHANE PAVEMENT MARKING - LINE 4" (SOLID WHITE)
7. MODIFIED URETHANE PAVEMENT MARKING - LINE 4" (SOLID YELLOW)
8. MODIFIED URETHANE PAVEMENT MARKING - LINE 6" (WHITE, 2'-6' SKIP-DASH)
9. MODIFIED URETHANE PAVEMENT MARKING - LINE 6" (SOLID WHITE)

MODEL: Default
FILE NAME: pw:\\dmroom.dot.illinois.gov:PWIDOT\Documents\IDOT Offices\District 1\Projects\D118521\CADData\Design\D118521-sht-plan.dgn

USER NAME = mullaneed	DESIGNED -	REVISED -	STATE OF ILLINOIS DEPARTMENT OF TRANSPORTATION
	DRAWN -	REVISED -	
PLOT SCALE = 100.0000 ' / in.	CHECKED -	REVISED -	
PLOT DATE = 8/10/2021	DATE -	REVISED -	

ROADWAY AND PAVEMENT MARKING PLAN
U.S. ROUTE 45 (LA GRANGE RD.) AT CAL-SAG CHANNEL

SCALE: 1"=50' | SHEET 2 OF 2 SHEETS | STA. TO STA.

F.A.P RTE.	SECTION	COUNTY	TOTAL SHEETS	SHEET NO.
330	2021-096-BP	COOK	29	25
		CONTRACT NO. 62P24		
		ILLINOIS	FED. AID PROJECT	

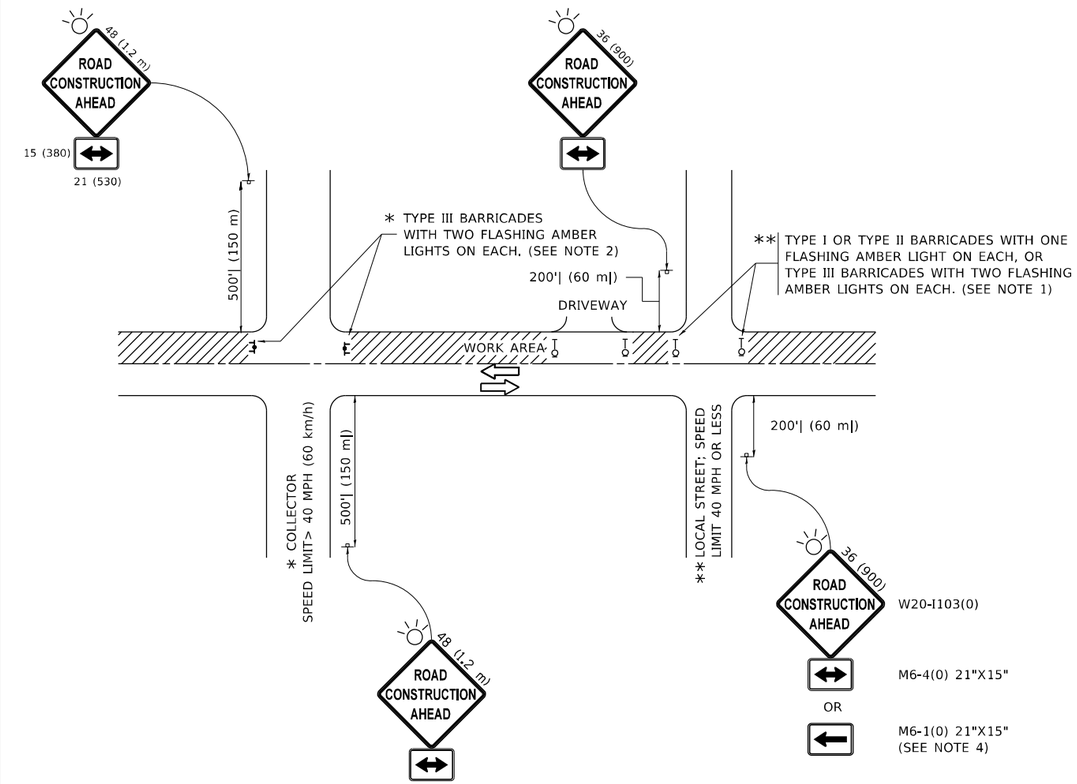

NOTES:

1. SIDE ROAD WITH A SPEED LIMIT OF 40 MPH (60 km/h) OR LESS AS SHOWN ON THE DRAWING AND AS DIRECTED BY THE ENGINEER:

   a) ONE "ROAD CONSTRUCTION AHEAD" SIGN 36 x 36 (900x900) WITH A FLASHER MOUNTED ON IT APPROXIMATELY 200' (60 m) IN ADVANCE OF THE MAIN ROUTE.

   b) THE CLOSED PORTION OF THE MAIN ROUTE SHALL BE PROTECTED BY BLOCKING WITH TYPE I, TYPE II OR TYPE III BARRICADES, 1/3 OF THE CROSS SECTION OF THE CLOSED PORTION.

2. SIDE ROAD WITH A SPEED LIMIT GREATER THAN 40 MPH (60 km/h) AS SHOWN ON THE DRAWING AND AS DIRECTED BY THE ENGINEER:

   a) ONE "ROAD CONSTRUCTION AHEAD" SIGN 48 x 48 (1.2 m x 1.2 m) WITH A FLASHER MOUNTED ON IT APPROXIMATELY 500' (150 m) IN ADVANCE OF THE MAIN ROUTE.

   b) THE CLOSED PORTION OF THE MAIN ROUTE SHALL BE PROTECTED BY BLOCKING WITH TYPE III BARRICADES, 1/2 OF THE CROSS SECTION OF THE CLOSED PORTION.

3. CONES MAY BE SUBSTITUTED FOR BARRICADES OR DRUMS AT HALF THE SPACING DURING DAY OPERATIONS. CONES SHALL BE A MINIMUM OF 28 (710) IN HEIGHT.

4. WHEN THE SIDE ROAD LIES BETWEEN THE BEGINNING OF THE MAINLINE SIGNING AND THE WORK ZONE, A SINGLE HEADED ARROW (M6-1) SHALL BE USED IN LIEU OF THE DOUBLE HEADED ARROW (M6-4).

5. WHEN WORK IS BEING PERFORMED ON A SIDE ROAD OR DRIVEWAY, FOLLOW THE APPLICABLE STANDARD(S). THE DIRECTIONAL ARROW (M6-1 OR M6-4) SHALL BE COVERED OR REMOVED WHEN NO LONGER CONSISTENT WITH THE TRAFFIC CONTROL SET-UP.

6. ADVANCE WARNING SIGNS ARE TO BE OMITTED ON DRIVEWAYS UNLESS OTHERWISE SPECIFIED IN THE PLANS OR BY THE ENGINEER.

7. THE TRAFFIC CONTROL AND PROTECTION FOR SIDE ROADS, INTERSECTIONS, AND DRIVEWAYS SHALL BE INCLUDED IN THE COST OF SPECIFIED TRAFFIC CONTROL STANDARDS OR ITEMS.

All dimensions are in inches (millimeters) unless otherwise shown.

MODEL: Default
FILE NAME: pw:\\uhnoom.dot.illinois.gov:PWIDOT\Documents\IDOT Offices\District 1\Projects\D118321\CADData\Design\TrafficStd.dgn

USER NAME = mullaneco	DESIGNED - L.H.A.	REVISED - A. HOUSEH 10-15-96	STATE OF ILLINOIS DEPARTMENT OF TRANSPORTATION
	DRAWN -	REVISED - T. RAMMACHER 01-06-00	
PLOT SCALE = 100.0000 ' / in.	CHECKED -	REVISED - A. SCHUETZE 07-01-13	
PLOT DATE = 8/10/2021	DATE - 06-89	REVISED - A. SCHUETZE 09-15-16	

TRAFFIC CONTROL AND PROTECTION FOR SIDE ROADS, INTERSECTIONS, AND DRIVEWAYS

SCALE: NONE | SHEET 1 OF 1 SHEETS | STA. TO STA.

F.A.P RTE.	SECTION	COUNTY	TOTAL SHEETS	SHEET NO.
330	2021-096-BP	COOK	29	26
	TC-10	CONTRACT NO. 62P24		
	ILLINOIS	FED. AID PROJECT		

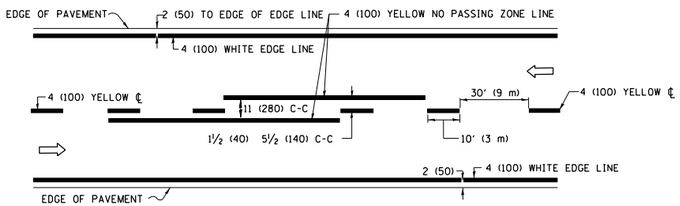

2–LANE ROADWAY

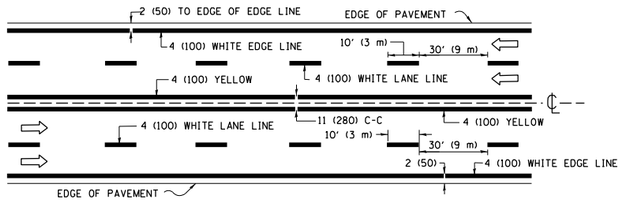

MULTI–LANE UNDIVIDED

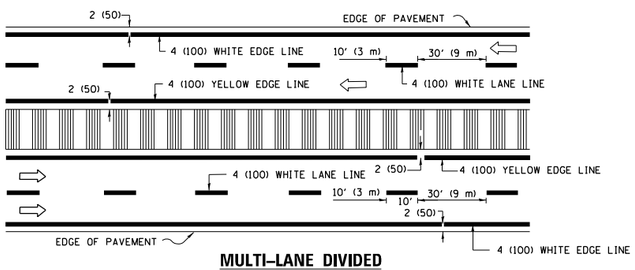

MULTI–LANE DIVIDED
WITH MEDIAN

TYPICAL LANE AND EDGE LINE MARKING

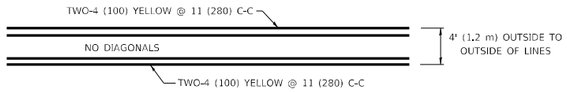

4' (1.2 m) WIDE MEDIANS ONLY

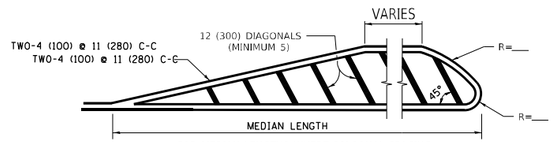

FOR MEDIAN LENGTHS WHERE DIAGONAL SPACING CANNOT BE ATTAINED, USE 5 (FIVE) EQUALLY SPACED DIAGONAL LINES.

DIAGONAL LINE SPACING: 50' (15 m) C-C (LESS THAN 30MPH (50 km/h))
75' (25 m) C-C 30MPH (50 km/h) TO 45MPH (70 km/h))
150' (45 m) C-C (MORE THAN 45MPH (70 km/h))

MEDIANS OVER 4' (1.2 m) WIDE

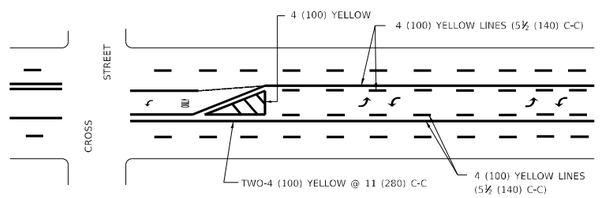

A MINIMUM OF TWO PAIRS OF TURN ARROWS SHALL BE USED, WHITE IN COLOR. ADDITIONAL PAIRS SHALL BE PLACED AT 200' (60 m) TO 300' (90 m) INTERVALS.

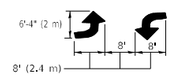

MEDIAN WITH TWO–WAY LEFT TURN LANE

TYPICAL PAINTED MEDIAN MARKING

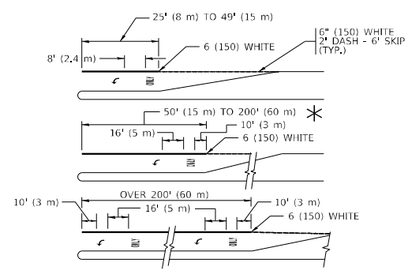

FULL SIZE LETTERS 8' (2.4 m) AND ARROWS SHALL BE USED.
AREA = 15.6 SQ. FT. (1.5 m²) **ONLY** AREA = 20.8 SQ. FT. (1.9 m²)

✳ TURN LANES IN EXCESS OF 400' (120 m) IN LENGTH MAY HAVE AN ADDITIONAL SET OF ARROW - "ONLY" INSTALLED MIDWAY BETWEEN THE OTHER TWO SETS OF ARROW - "ONLY".

TYPICAL LEFT (OR RIGHT) TURN LANE

TYPICAL TURN LANE MARKING

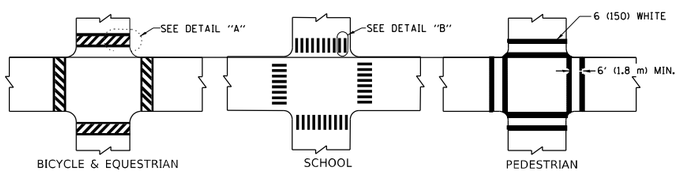

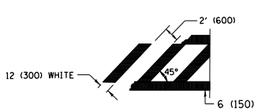

DETAIL "A"

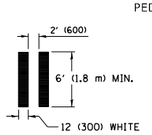

DETAIL "B"

TYPICAL CROSSWALK MARKING

✳ MARKINGS SHALL BE INSTALLED PARALLEL TO THE CENTERLINE OF THE ROAD WHICH IT CROSSES

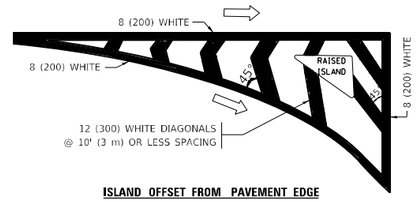

ISLAND OFFSET FROM PAVEMENT EDGE

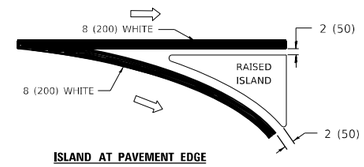

ISLAND AT PAVEMENT EDGE

TYPICAL ISLAND MARKING

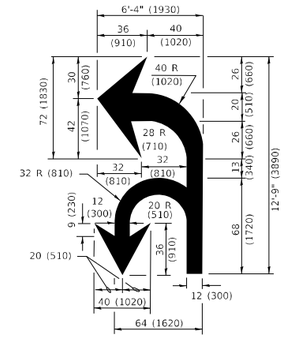

COMBINATION LEFT AND U–TURN

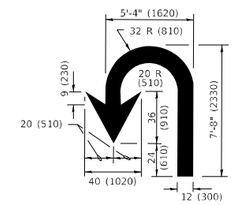

U–TURN

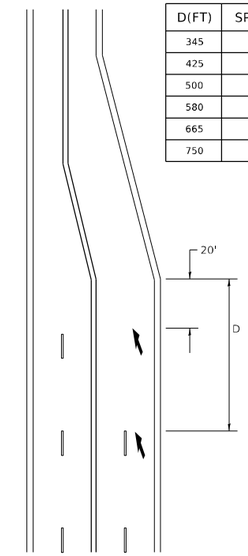

D(FT)	SPEED LIMIT
345	30
425	35
500	40
580	45
665	50
750	55

LANE REDUCTION TRANSITION

✳ LANE REDUCTION ARROWS REQUIRED AT SPEEDS OF 45 MPH OR GREATER OR WHEN SPECIFIED IN PLANS.

TYPE OF MARKING	WIDTH OF LINE	PATTERN	COLOR	SPACING / REMARKS
CENTERLINE ON 2 LANE PAVEMENT	4 (100)	SKIP-DASH	YELLOW	10' (3 m) LINE WITH 30' (9 m) SPACE
CENTERLINE ON MULTI-LANE UNDIVIDED PAVEMENT	2 @ 4 (100)	SOLID	YELLOW	11 (280) C-C
NO PASSING ZONE LINES: FOR ONE DIRECTION FOR BOTH DIRECTIONS	4 (100) 2 @ 4 (100)	SOLID SOLID	YELLOW YELLOW	5½ (140) C-C FROM SKIP-DASH CENTERLINE 11 (280) C-C OMIT SKIP-DASH CENTERLINE BETWEEN
LANE LINES	4 (100) 5 (125) ON FREEWAYS	SKIP-DASH SKIP-DASH	WHITE WHITE	10' (3 m) LINE WITH 30' (9 m) SPACE
DOTTED LINES (EXTENSIONS OF CENTER, LANE OR TURN LANE MARKINGS)	SAME AS LINE BEING EXTENDED	SKIP-DASH	SAME AS LINE BEING EXTENDED	2' (600) LINE WITH 6' (1.8 m) SPACE
EDGE LINES	4 (100)	SOLID	YELLOW-LEFT WHITE-RIGHT	OUTLINE MEDIANS IN YELLOW
TURN LANE MARKINGS	6 (150) LINE; FULL SIZE LETTERS & SYMBOLS (8' (2.4m))	SOLID	WHITE	SEE TYPICAL TURN LANE MARKING DETAIL
TWO WAY LEFT TURN MARKING	2 @ 4 (100) EACH DIRECTION 8' (2.4m) LEFT ARROW	SKIP-DASH AND SOLID IN PAIRS	YELLOW WHITE	10' (3 m) LINE WITH 30' (9 m) SPACE FOR SKIP-DASH: 5½ (140) C-C BETWEEN SOLID LINE AND SKIP-DASH LINE SEE TYPICAL TWO-WAY LEFT TURN MARKING DETAIL
CROSSWALK LINES (PEDESTRIAN) A. DIAGONALS (BIKE & EQUESTRIAN) B. LONGITUDINAL BARS (SCHOOL)	2 @ 6 (150) 12 (300) @ 45° 12 (300) @ 90°	SOLID SOLID SOLID	WHITE WHITE WHITE	NOT LESS THAN 6' (1.8 m) APART 2' (600) APART 2' (600) APART SEE TYPICAL CROSSWALK MARKING DETAILS.
STOP LINES	24 (600)	SOLID	WHITE	PLACE 4' (1.2 m) IN ADVANCE OF AND PARALLEL TO CROSSWALK, IF PRESENT. OTHERWISE, PLACE AT DESIRED STOPPING POINT. PARALLEL TO CROSSROAD CENTERLINE, WHERE POSSIBLE
PAINTED MEDIANS	2 @ 4 (100) WITH 12 (300) DIAGONALS @ 45° NO DIAGONALS USED FOR 4' (1.2 m) WIDE MEDIANS	SOLID	YELLOW: TWO WAY TRAFFIC WHITE: ONE WAY TRAFFIC	11 (280) C-C FOR THE DOUBLE LINE SEE TYPICAL PAINTED MEDIAN MARKING.
GORE MARKING AND CHANNELIZING LINES	8 (200) WITH 12 (300) DIAGONALS @ 45°	SOLID	WHITE	DIAGONALS: 15' (4.5 m) C-C (LESS THAN 30MPH (50 km/h)) 20' (6 m) C-C 30MPH (50 km/h) TO 45MPH (70 km/h)) 30' (9 m) C-C (OVER 45MPH (70 km/h))
RAILROAD CROSSING	24 (600) TRANSVERSE LINES: "RR" IS 6' (1.8 m) LETTERS: 16 (400) LINE FOR "X"	SOLID	WHITE	SEE STATE STANDARD 780001 AREA OF: "R"=3.6 SQ. FT. (0.33 m²) EACH "X"=54.0 SQ. FT. (5.0 m²)
SHOULDER DIAGONALS (REQUIRED FOR SHOULDERS ≥ 8')	12 (300) @ 45°	SOLID	WHITE - RIGHT YELLOW - LEFT	50' (15 m) C-C (LESS THAN 30MPH (50 km/h)) 75' (25 m) C-C (30 MPH (50 km/h) TO 45MPH (70 km/h)) 150' (45 m) C-C (OVER 45MPH (70 km/h))
U TURN ARROW	SEE DETAIL	SOLID	WHITE	16.3 SF
2 ARROW COMBINATION LEFT AND U TURN	SEE DETAIL	SOLID	WHITE	30.4 SF

FOR FURTHER DETAILS ON PAVEMENT MARKING REFER TO STANDARD SPECIFICATIONS FOR ROAD AND BRIDGE CONSTRUCTION AND STATE STANDARD 780001.

All dimensions are in inches (millimeters) unless otherwise shown.

MODEL: Default
FILE NAME: pw:\\uhnroom.dot.illinois.gov:PWIDOT\Documents\IDOT Offices\District 1\Projects\D118521\CADData\Design\Dist50\d.dgn

USER NAME = mullaneed	DESIGNED - EVERS	REVISED - C. JUCIUS 09-09-09	
	DRAWN -	REVISED - C. JUCIUS 07-01-13	
PLOT SCALE = 100.0000 ' / in.	CHECKED -	REVISED - C. JUCIUS 12-21-15	
PLOT DATE = 8/10/2021	DATE - 03-19-90	REVISED - C. JUCIUS 04-12-16	

STATE OF ILLINOIS
DEPARTMENT OF TRANSPORTATION

DISTRICT ONE
TYPICAL PAVEMENT MARKINGS

SCALE: NONE | SHEET 1 OF 2 SHEETS | STA. TO STA.

F.A.P RTE.	SECTION	COUNTY	TOTAL SHEETS	SHEET NO.
330	2021-096-BP	COOK	29	27
	TC–13	CONTRACT NO. 62P24		
		ILLINOIS	FED. AID PROJECT	

TURN BAY ENTRANCE AT START OF LANE CLOSURE TAPER

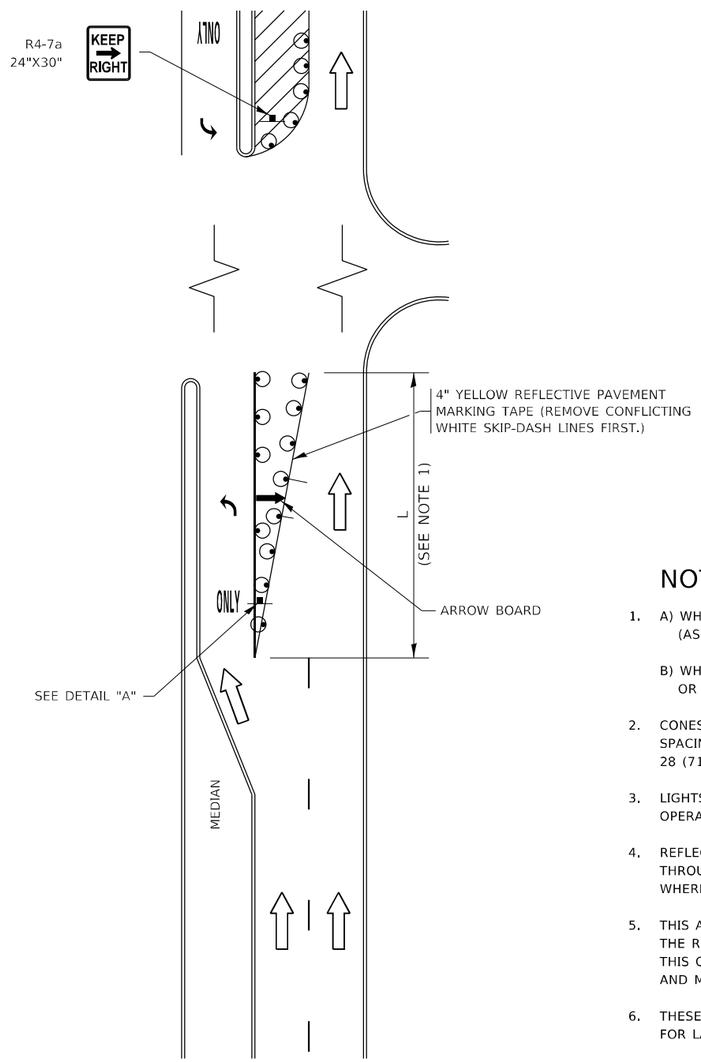

FIGURE 1

LEGEND

- WORK AREA
- LANE OPEN TO TRAFFIC
- ARROW BOARD
- TYPE I OR II BARRICADE OR DRUM WITH STEADY BURN LIGHT
- DRUM WITH STEADY BURN LIGHT
- SIGN ASSEMBLY
- TYPE I OR II CHECK BARRICADE WITH FLASHING LIGHT

NOTES:

1. A) WHEN "L" IS ≤ THE STORAGE LENGTH OF THE TURN LANE (AS SHOWN IN FIG. 1), USE FIGURE 1.

   B) WHEN "L" IS > THE STORAGE LENGTH OF THE TURN LANE OR THE TURN LANE IS WITHIN THE LANE CLOSURE, USE FIGURE 2.

2. CONES MAY BE SUBSTITUTED FOR BARRICADES OR DRUMS AT HALF THE SPACING DURING DAY OPERATIONS. CONES SHALL BE A MINIMUM OF 28 (710) IN HEIGHT.

3. LIGHTS WILL NOT BE REQUIRED ON BARRICADES OR DRUMS FOR DAY OPERATIONS. ALL LIGHTS SHALL BE MONODIRECTIONAL.

4. REFLECTIVE TEMPORARY PAVEMENT MARKINGS SHALL BE PLACED THROUGHOUT THE BARRICADED AREAS OF EACH TURN BAY AS SHOWN WHERE THE CLOSURE TIME IS GREATER THAN FOURTEEN (14) DAYS.

5. THIS APPLICATION ALSO APPLIES WHEN WORK IS BEING PERFORMED IN THE RIGHT LANE(S) AND THE RIGHT TURN BAY IS TO REMAIN OPEN. UNDER THIS CONDITION, "RIGHT TURN LANE" R3-I100R 24 x 24 (600 x 600) AND M6-2R 21 x 15 (530 x 380) SHALL BE USED.

6. THESE CONTROLS SHALL SUPPLEMENT MAINLINE TRAFFIC CONTROL FOR LANE CLOSURES.

7. THE SIGNS SHALL BE MOUNTED ABOVE THE BARRICADES/DRUMS ON SEPARATE SIGN SUPPORTS THAT MEET NCHRP 350 OR MASH PREQUIREMENTS.

8. TRAFFIC CONTROL AND PROTECTION AT TURN BAYS (TO REMAIN OPEN TO TRAFFIC) SHALL BE INCLUDED IN THE COST OF SPECIFIED TRAFFIC CONTROL STANDARDS OR ITEMS.

TURN BAY ENTRANCE WITHIN A LANE CLOSURE

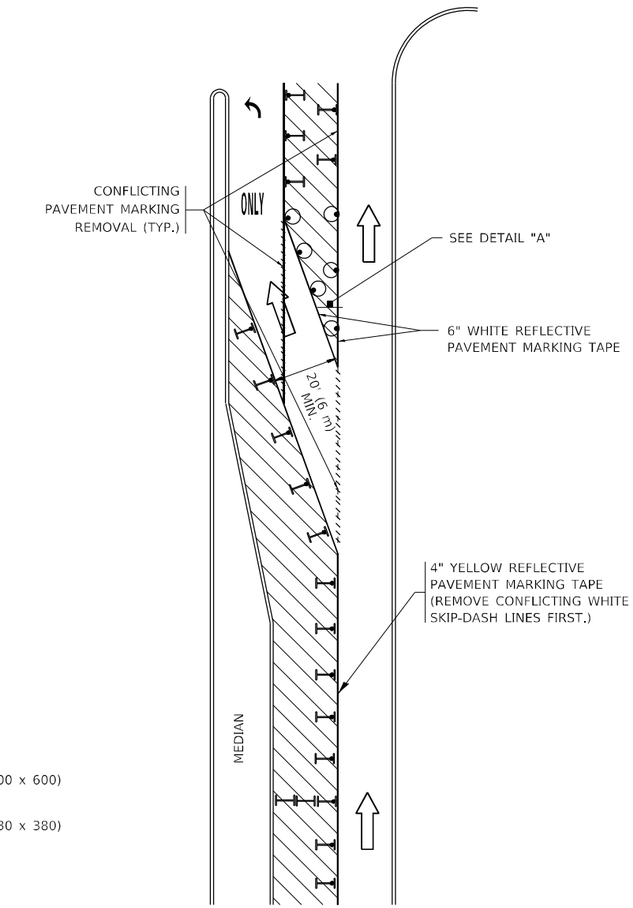

FIGURE 2

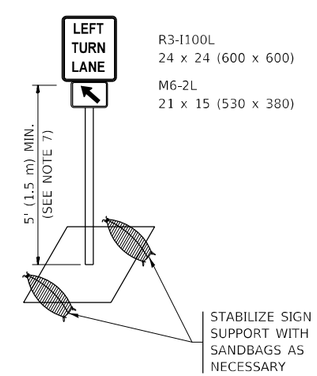

DETAIL A

All dimensions are in inches (millimeters) unless otherwise shown.

MODEL: Default
FILE NAME: pw:\\pwmroom.dot.illinois.gov:PWIDOT\Documents\IDOT Offices\District 1\Projects\D118521\CADData\Design\DistStd.dgn

USER NAME = mullaneed	DESIGNED - T. RAMMACHER 09-08-94	REVISED - R. BORO 09-14-09	STATE OF ILLINOIS DEPARTMENT OF TRANSPORTATION
	DRAWN - A. HOUSEH 11-07-95	REVISED - A. SCHUETZE 07-01-13	
PLOT SCALE = 100.0000 ' / in.	CHECKED - A. HOUSEH 10-12-96	REVISED - A. SCHUETZE 09-15-16	
PLOT DATE = 8/10/2021	DATE - T. RAMMACHER 01-06-00	REVISED -	

TRAFFIC CONTROL AND PROTECTION AT TURN BAYS (TO REMAIN OPEN TO TRAFFIC)

SCALE: NONE | SHEET 1 OF 1 SHEETS | STA. TO STA.

F.A.P RTE.	SECTION	COUNTY	TOTAL SHEETS	SHEET NO.
330	2021-096-BP	COOK	29	28
	TC-14	CONTRACT NO. 62P24		
	ILLINOIS	FED. AID PROJECT		

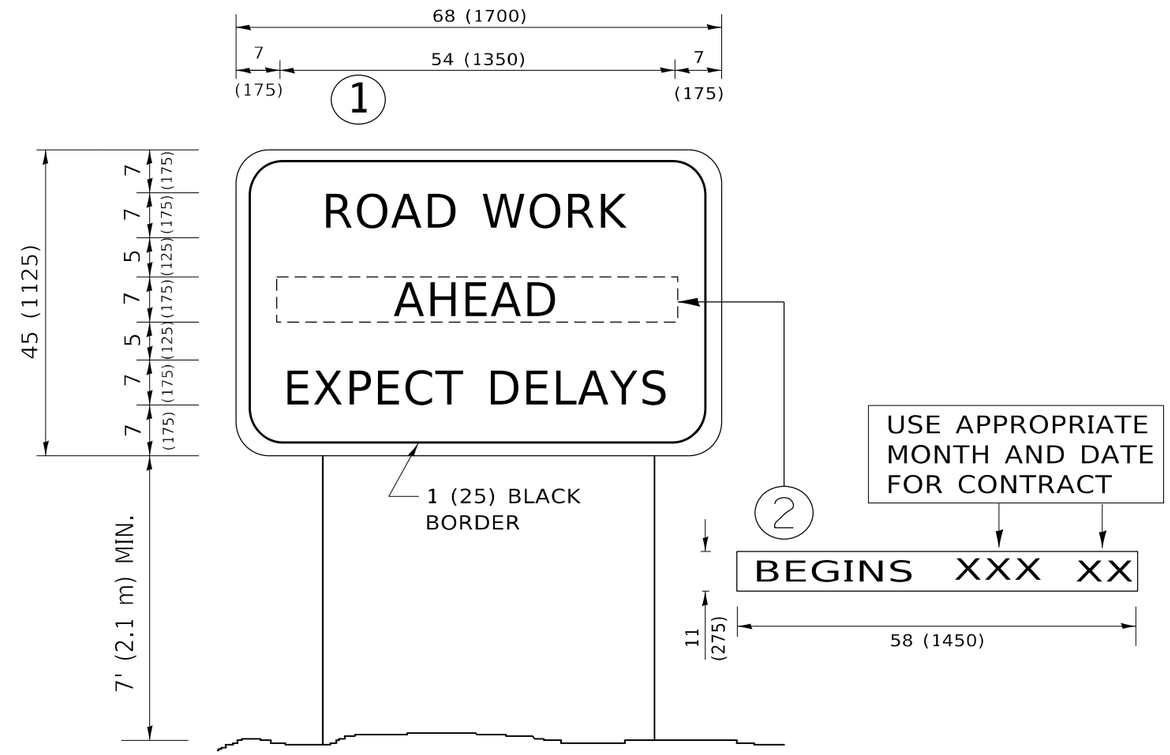

NOTES:

1. USE BLACK LETTERING ON ORANGE BACKGROUND.
2. ERECT SIGNS IN ADVANCE OF THE LOCATION FOR THE "ROAD CONSTRUCTION AHEAD" SIGN AT LOCATIONS AS DIRECTED BY THE ENGINEER.
3. ERECT SIGN (1) WITH INSTALLED PANEL (2) ONE WEEK PRIOR TO THE START OF CONSTRUCTION.
4. REMOVE PANEL (2) SOON AFTER THE START OF CONSTRUCTION.
5. SEE SPECIAL PROVISION FOR "TEMPORARY INFORMATION SIGNING" FOR ADDITIONAL INFORMATION.
6. ONE SIGN ASSEMBLY EQUALS 25.70 SQ. FT. (2.3 SQ. M.)
7. SHALL BE PAID FOR AS TEMPORARY INFORMATION SIGNING.

ALL DIMENSIONS ARE IN INCHES (MILLIMETERS) UNLESS OTHERWISE SHOWN.

MODEL: Default
FILE NAME: pw:\\uhinoon.dot.illinois.gov:PWIDOT\Documents\IDOT Offices\District 1\Projects\D118521\CADData\Design\DistStd.dgn

USER NAME = mullaneco	DESIGNED -	REVISED -	R. MIRS 09-15-97	STATE OF ILLINOIS DEPARTMENT OF TRANSPORTATION
	DRAWN -	REVISED -	R. MIRS 12-11-97	
PLOT SCALE = 100.0000 ' / in.	CHECKED -	REVISED -	T. RAMMACHER 02-02-99	
PLOT DATE = 8/10/2021	DATE -	REVISED -	C. JUCIUS 01-31-07	

ARTERIAL ROAD INFORMATION SIGN

SCALE: NONE | SHEET 1 OF 1 SHEETS | STA. | TO STA.

F.A.P RTE.	SECTION	COUNTY	TOTAL SHEETS	SHEET NO.
330	2021-096-BP	COOK	29	29
	TC-22	CONTRACT NO. 62P24		
		ILLINOIS	FED. AID PROJECT	