F.A.U. RTE.	SECTION	COUNTY	TOTAL SHEETS	SHEET NO.
2843	3249B-R	COOK	64	48
STA. _____		TO STA. _____		
FED. ROAD DIST. NO. _	ILLINOIS	FED. AID PROJECT		

CONTRACT NO. 62539

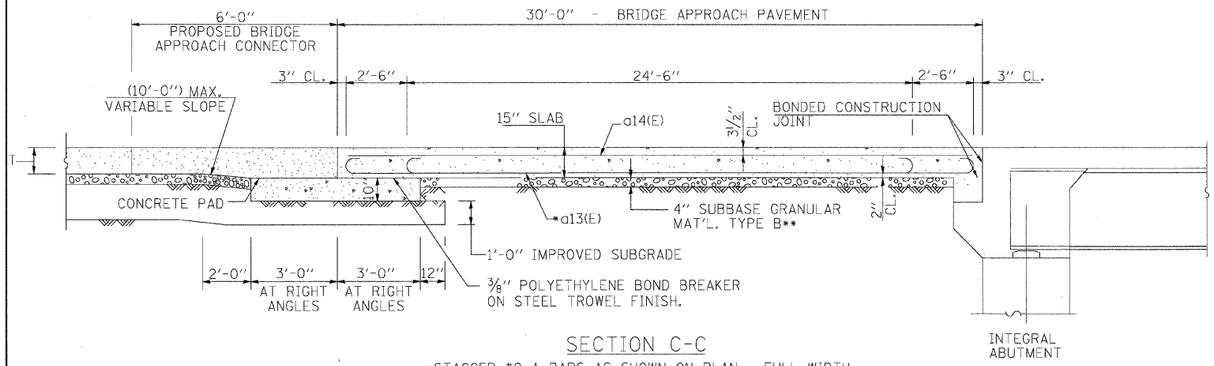

SECTION C-C

*STAGGER #9 A BARS AS SHOWN ON PLAN - FULL WIDTH

**INCLUDED IN BRIDGE APPROACH SLAB SPECIAL

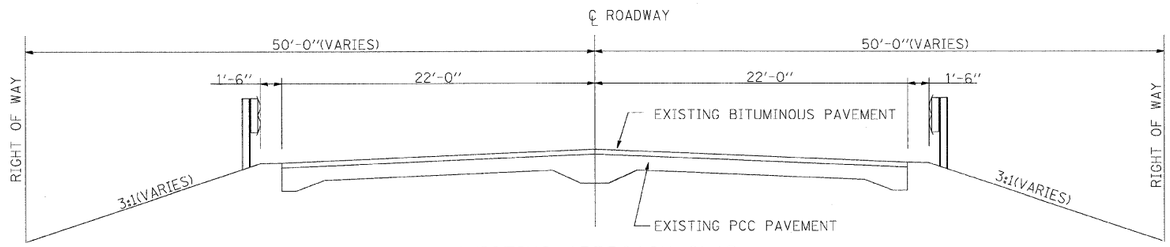

EXISTING APPROACH SLAB

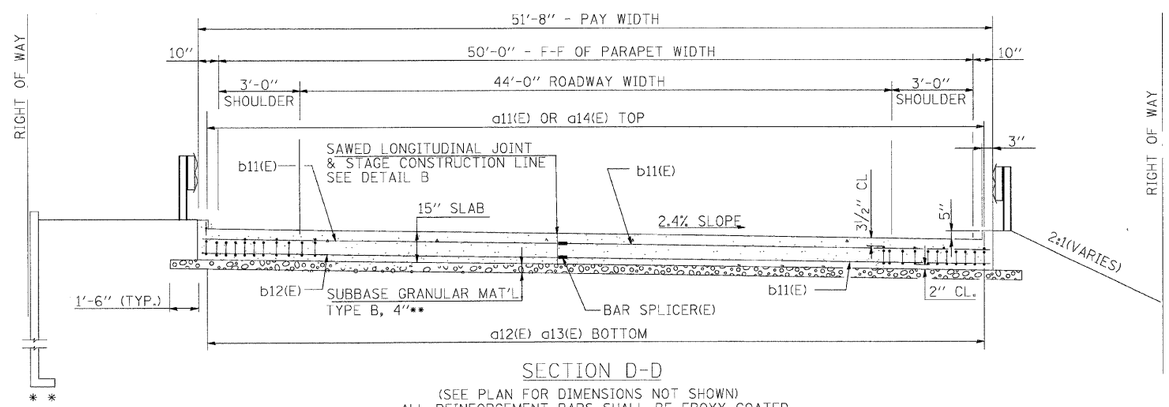

SECTION D-D

(SEE PLAN FOR DIMENSIONS NOT SHOWN)

ALL REINFORCEMENT BARS SHALL BE EPOXY COATED.

**INCLUDED IN BRIDGE APPROACH SLAB SPECIAL

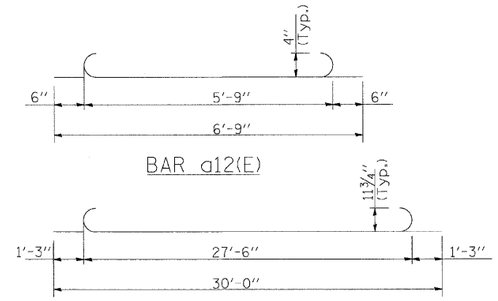

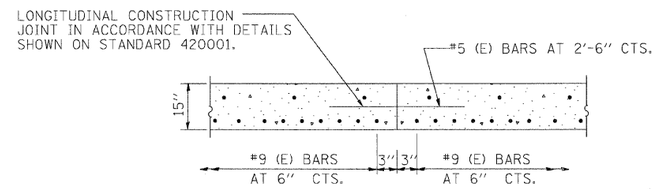

AS APPROVED BY THE ENGINEER, THE CONTRACTOR MAY ELECT TO REDUCE THE WIDTHS OF POUR BY USE OF THE OPTIONAL LONGITUDINAL CONSTRUCTION JOINT SHOWN. JOINTS SHALL BE LOCATED AT THE EDGE OF A TRAFFIC LANE.

APPROACH SLAB BILL OF MATERIAL

BAR	NO.	SIZE	LENGTH	SHAPE
a11(E)	120	#4	5'-9"	
a12(E)	120	#4	6'-9"	
a13(E)	216	#5	29'-9"	
a14(E)	108	#9	30'-0"	
b11(E)	36	#4	29'-0"	
b12(E)	124	#5	29'-0"	
h11(E)	56	#5	29'-2"	

REINFORCEMENT BARS DESIGNATED (E) SHALL BE EPOXY COATED

NOTE:

ALL WORK AND MATERIAL RELATED TO APPROACH PAVEMENT WILL BE PAID FOR UNDER "BRIDGE APPROACH PAVEMENT (SPECIAL).

fy = (60,000 P.S.I.)
f'c = (3,500 P.S.I.)
n = 8.5

#4 = 1'-8"
#5 = 2'-2"
#9 = 5'-9"

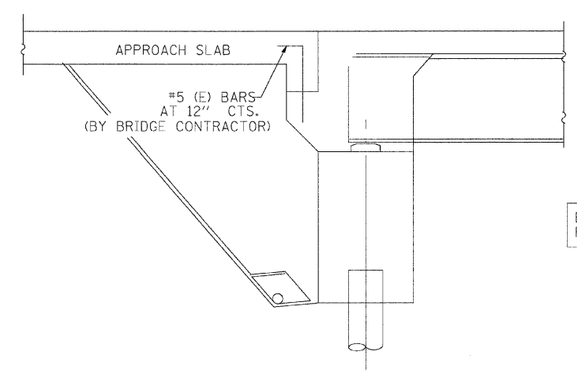

(INTEGRAL ABUTMENTS)

BRIDGE APPROACH PAVEMENT (SPECIAL)	SQ YD	350

REVISIONS	
NAME	DATE

RME Rubinos & Mesia Engineers, Inc.

200 S. Michigan Ave, Suite 1500 Chicago IL 60604-2482
T> 312 870 8600 F> 312 663 1473

ILLINOIS DEPARTMENT OF TRANSPORTATION

F.A.U. 2843 DIXIE HIGHWAY OVER BUTTERFIELD CREEK

BRIDGE APPROACH SLAB (2 OF 2)

SCALE: VERT. NONE HORIZ.

DATE 6-25-09

DRAWN BY AW
DESIGNED BY AW
CHECKED BY MF