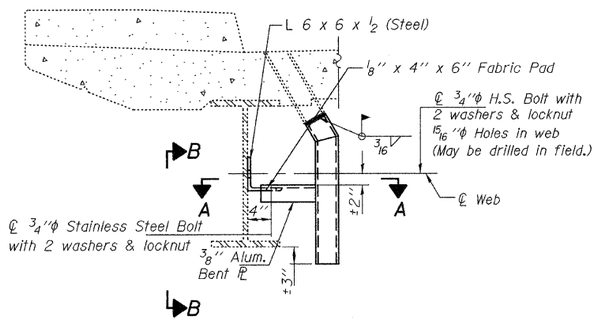


SECTION AT DRAIN

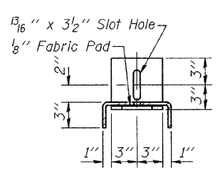


SECTION B-B

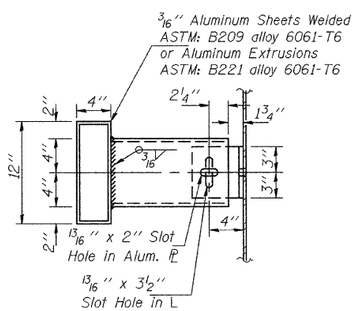


SECTION A-A

# DRAIN EXTENSION DETAIL

**06-[7BR&BR-1,7VB-M,6BR&6,7 RS-1 &I]

| | | | | | | | | | | |
|---|---|---|---|---|---|---|---|---|---|---|
| FILE NAME = $FILEL$ | USER NAME = $USER$ | DESIGNED - | REVISED - | STATE OF ILLINOIS DEPARTMENT OF TRANSPORTATION | BRIDGE REPAIR PLANS SN 006-0133 | F.A. RTE. | SECTION | COUNTY | TOTAL SHEETS | SHEET NO. |
| | | DRAWN - | REVISED - | | | I-80 | ** | BUREAU | 344 | 249 |
| | PLOT SCALE = $SCALE$ | CHECKED - | REVISED - | | | | | CONTRACT NO. 66908 | | |
| | PLOT DATE = $DATE$ | DATE - | REVISED - | | SCALE: SHEET NO. OF SHEETS STA. TO STA. | FED. ROAD DIST. NO. | ILLINOIS | FED. AID PROJECT | | |

junk2.dgn 9/28/2009 12:31:31 PM