CONTRACT NO. 70623

F.A.P. RTE.	SECTION	COUNTY	TOTAL SHEETS	SHEET NO.
808	*	**	715	246

* (205,57,105)RS-2
** CHAMPAIGN & DOUGLAS

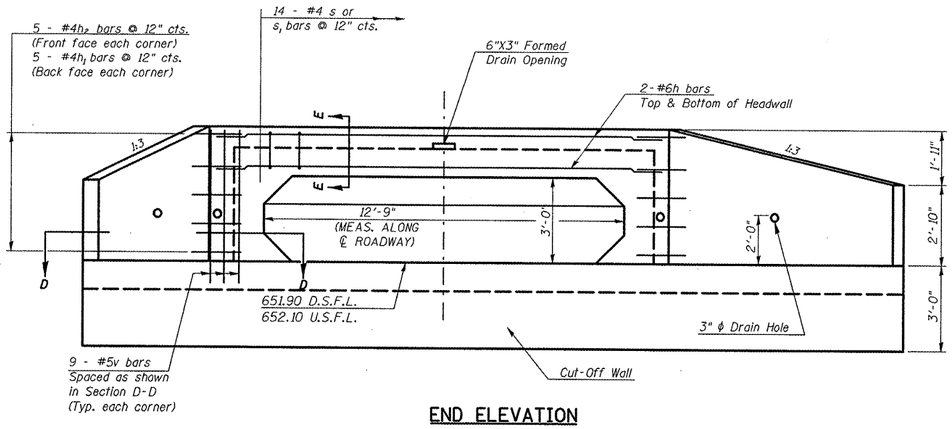

END ELEVATION

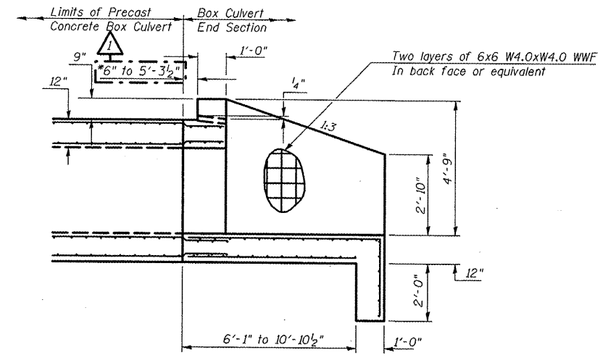

HALF SIDE ELEVATION
(DIMENSIONS AT RIGHT ANGLES TO ℄ OF ROADWAY)

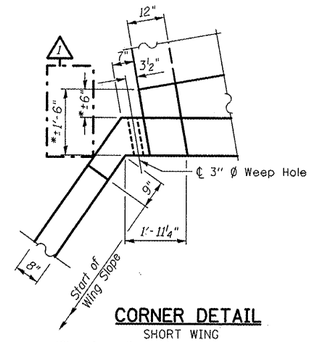

CORNER DETAIL
SHORT WING
(Showing dimensions and weep hole)

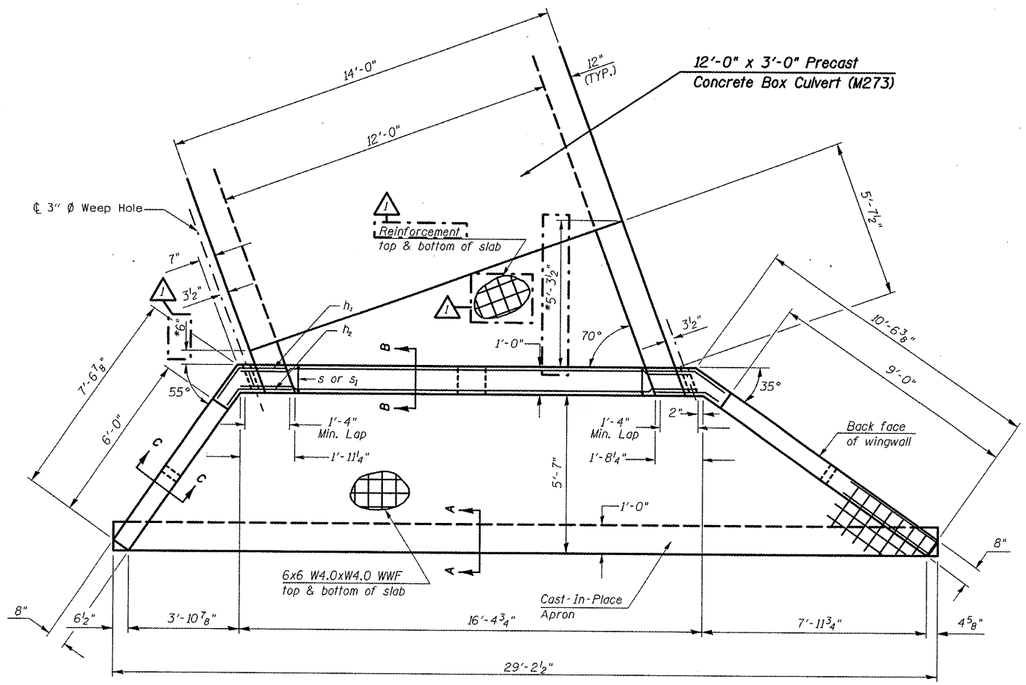

PLAN

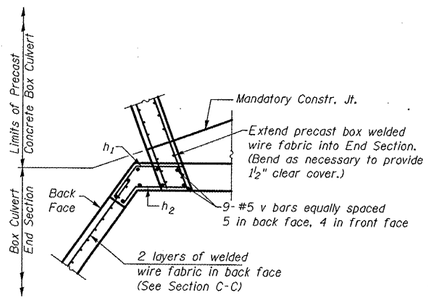

SECTION D-D
SHORT WING
(Showing reinforcement)

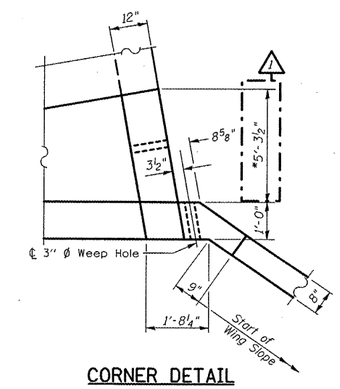

CORNER DETAIL
LONG WING
(Showing dimensions and weep hole)

* Dimensions shall be increased by 3'-0" if the Contractor elects to use the precast option for the Box Culvert End Sections. See Special Provisions.

SHEET 2 OF 9

END SECTION DETAILS
SINGLE 12'x3' PRECAST BOX CULVERT
AT SKEW = 20° RT. FWD.
F.A.P. ROUTE 808 - SECTION (205,57,105)RS-2
CHAMPAIGN COUNTY
STATION 2030+82.00, S.N. 010-8143
CULVERT NO. 6

Revised 10/26/2009 D.L.G.

PLOT DATE = 10/27/2009
FILE NAME = c:\pw_work\PWIDOT\CARROLLRT\d0101445\70623 Culvert No 4 & 6 Addendum.dgn
PLOT SCALE = 42.3529 ' / IN.
USER NAME = carrollrt