CONTRACT NO. 70623

| F.A.P. RTE. | SECTION | COUNTY | TOTAL SHEETS | SHEET NO. |
|---|---|---|---|---|
| 808 | • | •• | 715 | 313 |

• (205,57,105)RS-2
•• CHAMPAIGN & DOUGLAS

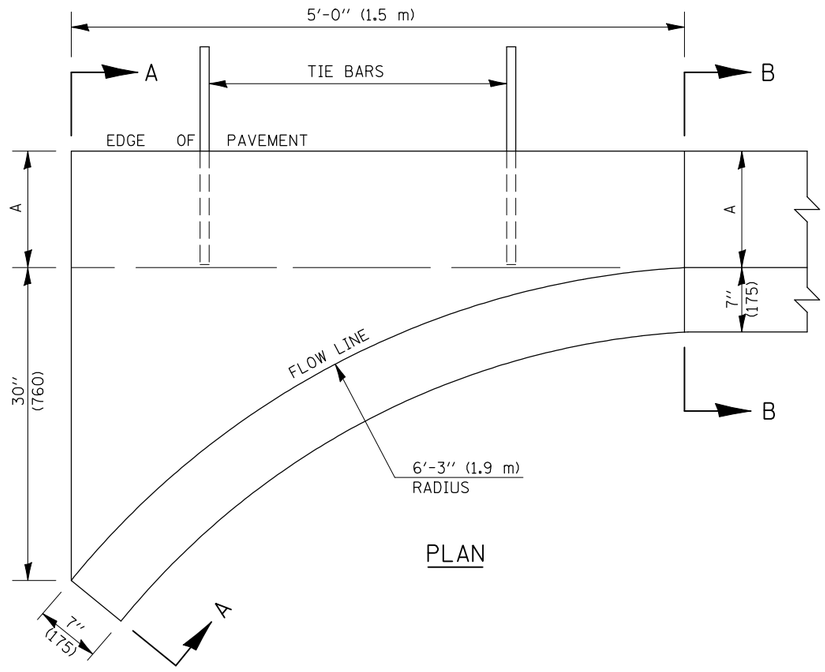


PLAN

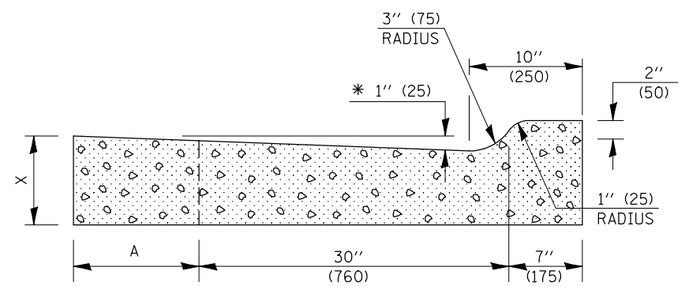


SECTION A-A

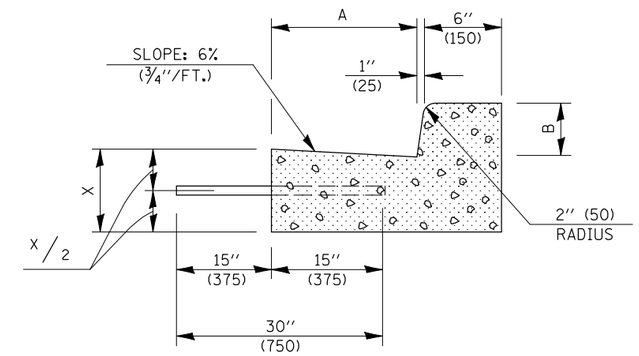


SECTION B-B

* INCREASE TO 2" (50 mm) WHERE IN THE PLANS IT IS SPECIFIED THAT THESE SPECIAL INLETS ARE TO BE CONSTRUCTED AS OUTLETS. ALL OUTLET LOCATIONS WILL BE CONFIRMED BY THE ENGINEER.

| | B-6.12 (B-15.30) | | B-9.12 (B-22.30) | | B-6.18 (B-15.45) | | B-9.18 (B-22.45) | | B-6.24 (B-15.60) | | B-9.24 (B-22.60) | |
|---|---|---|---|---|---|---|---|---|---|---|---|---|
| A | 12" (300) | 12" (300) | 12" (300) | 12" (300) | 18" (450) | 18" (450) | 18" (450) | 18" (450) | 24" (600) | 24" (600) | 24" (600) | 24" (600) |
| B | 6" (150) | 6" (150) | 9" (225) | 9" (225) | 6" (150) | 6" (150) | 9" (225) | 9" (225) | 6" (150) | 6" (150) | 9" (225) | 9" (225) |
| X | 9" (225) | 10" (250) | 9" (225) | 10" (250) | 9" (225) | 10" (250) | 9" (225) | 10" (250) | 9" (225) | 10" (250) | 9" (225) | 10" (250) |
| CU. YD. ($m^3$) CLASS SI CONCRETE (OUTLET) | 0.37 (0.28) | 0.42 (0.32) | 0.38 (0.29) | 0.42 (0.32) | 0.44 (0.34) | 0.49 (0.37) | 0.45 (0.34) | 0.50 (0.38) | 0.51 (0.39) | 0.56 (0.43) | 0.52 (0.40) | 0.57 (0.44) |

## GENERAL NOTES

1. CLASS SI CONCRETE SHALL BE USED THROUGHOUT.
2. TIE BARS SHALL BE NO. 6 (NO. 20) AT 24" (600 mm) CENTERS UNLESS OTHERWISE SHOWN. SPECIAL INLETS AND OUTLETS SHALL BE TIED TO THE PAVEMENT IN ACCORDANCE WITH DETAILS FOR LONGITUDINAL CONSTRUCTION JOINT SHOWN ON STANDARD 420001.
3. TIE BARS SHOWN ABOVE WILL NOT BE PAID FOR SEPARATELY BUT SHALL BE CONSIDERED AS INCIDENTAL TO CLASS SI CONCRETE (OUTLET).
4. WHEN SPECIAL INLET IS CONSTRUCTED ADJACENT TO FLEXIBLE PAVEMENT, THE TIE BARS SHALL BE OMITTED AND ALL CONSTRUCTION JOINTS SHALL BE PROVIDED WITH A DOWEL BAR CONFORMING TO ARTICLE 1006.11(b).
5. THIS WORK WILL BE PAID FOR AT THE CONTRACT UNIT PRICE PER CU. YD. ($m^3$) FOR CLASS SI CONCRETE (OUTLET) WHICH PRICE SHALL INCLUDE ALL LABOR AND MATERIAL AS SPECIFIED AND NO ADDITIONAL COMPENSATION WILL BE ALLOWED.

Note: All dimensions are in INCHES (millimeters) unless otherwise shown.

| DATE | REVISIONS | NAME |
|---|---|---|
| 11/06 | REPLACED DETAIL A-2.01 | TJB |

ILLINOIS DEPARTMENT OF TRANSPORTATION

# INLET- COMBINATION CONCRETE CURB & GUTTER (BARRIER CURB)

**DISTRICT 5 DETAIL NO. 60600095A**

PLOT DATE = 8/12/2009
FILE NAME = s:\pw_work\PWIDOT\CEARLDCKJD\d0180145\70623-sht-urban_details.dgn
PLOT SCALE = 42.3529 ' / IN.
USER NAME = cearlock,jd