CONTRACT NO. 70623

F.A.P. RTE.	SECTION	COUNTY	TOTAL SHEETS	SHEET NO.
808	*	**	715	500

STA. 2030+82.00 TO STA. 2031+00.00

FED. ROAD DIST. NO. | ILLINOIS | FED. AID PROJECT

* (205,57,105)RS-2
** CHAMPAIGN & DOUGLAS

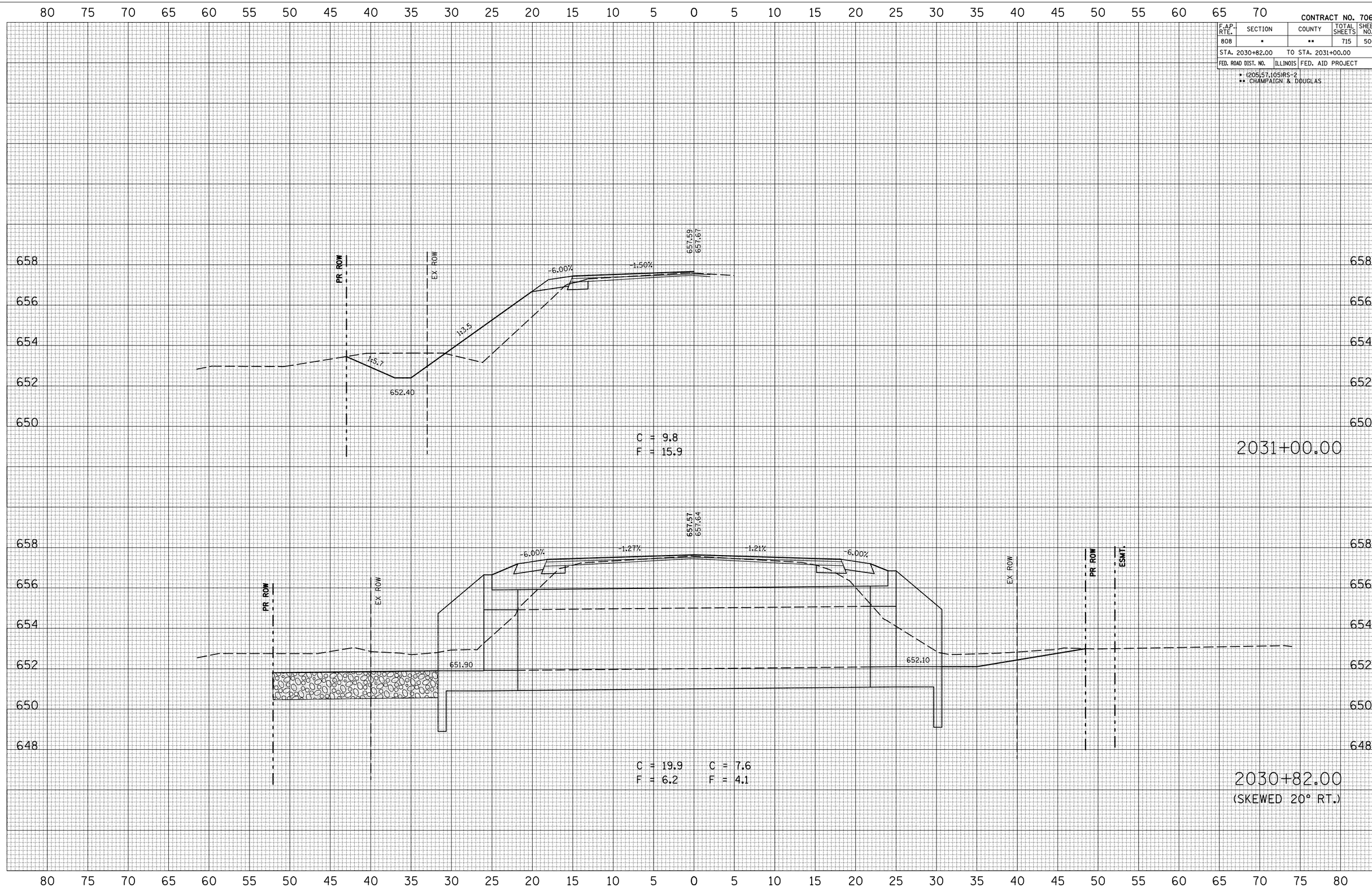

FINAL SURVEY | NOTE BOOK NO. | SURVEYED | PLOTTED | TEMPLATE | AREAS | AREAS CHECKED | BY | DATE

ORIGINAL SURVEY | NOTE BOOK NO. | SURVEYED | PLOTTED | TEMPLATE | AREAS | AREAS CHECKED | BY | DATE

PLOT DATE = 8/4/2009
FILE NAME = c:\pw_work\PWIDOT\CRAIGRE\d0139422\70623cs1-2031rs-dgn
PLOT SCALE = 10.5882 ' / IN.
USER NAME = craigre