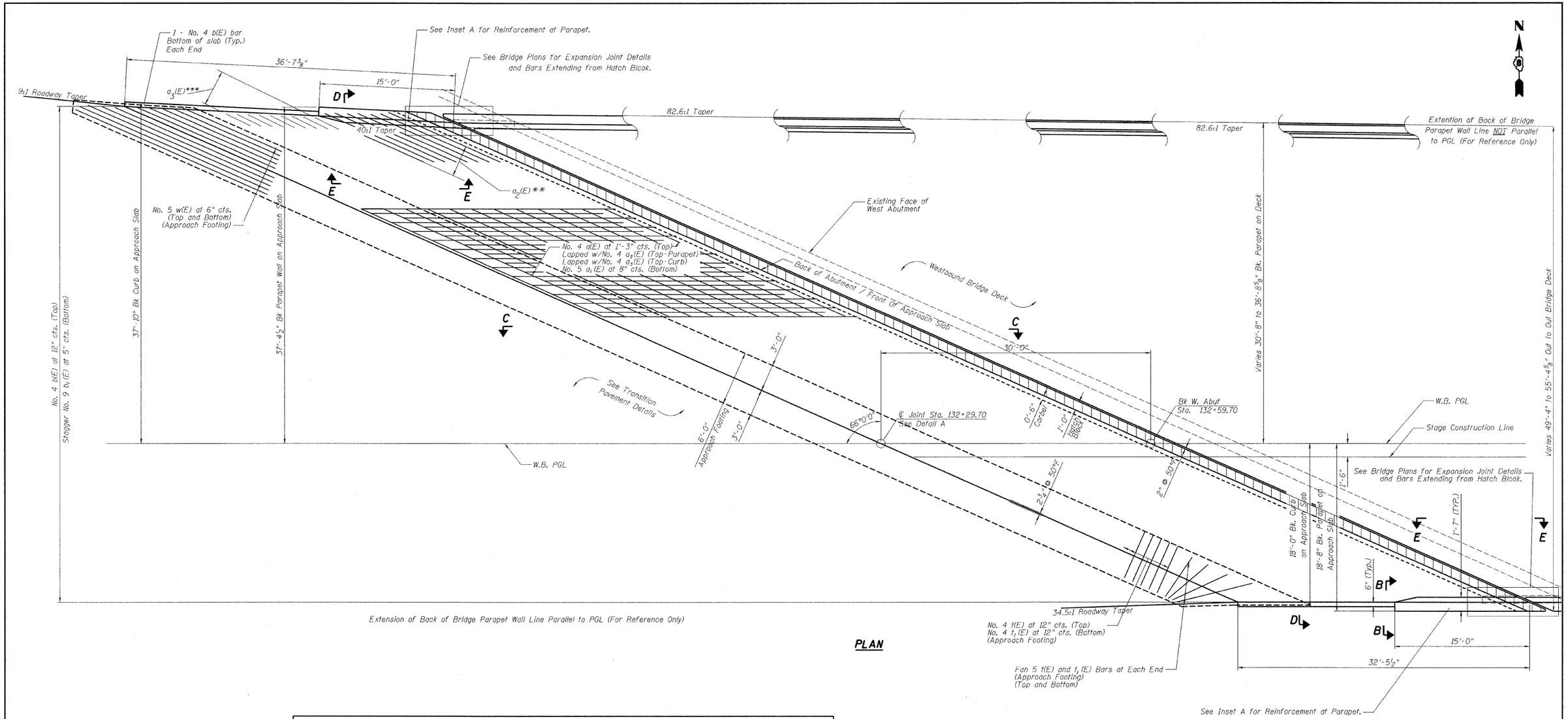

PLAN

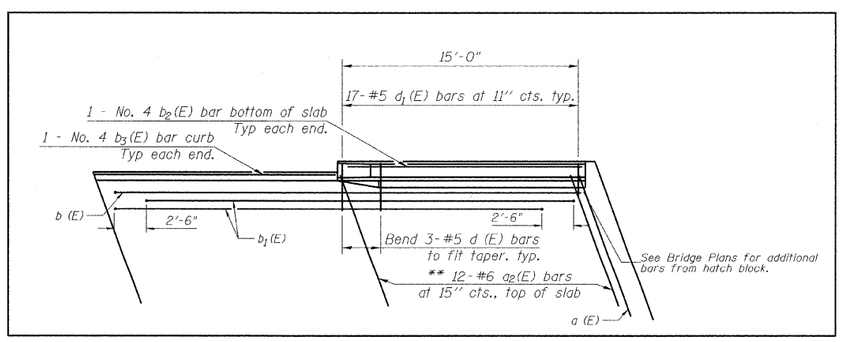

INSET A

Notes:

See Sheet 5 of 5 for Sections B-B, C-C, D-D, and E-E.
See Sheet 11 of 59 of Bridge Plans for Top of Slab Elevations.
See Sheet 38 of 59 of Bridge Plans for Wingwall Removal.

* Tilt #9 b_1 (E) bars as required to maintain clearance.
** Alternate with a(E) bars, typ. each parapet.
*** Alternate with a(E) bars, typ. each curb.

FILE NAME = P:\060601B\dgn\CADD Sheets\D876876-sht-details_approach pvmt (special)-001.dgn	USER NAME = mschwierjohn	DESIGNED - DRB	REVISED -
		DRAWN - DRB	REVISED -
	PLOT SCALE = 5.1944 ' / IN.	CHECKED - SJK	REVISED -
	PLOT DATE = 8/6/2009	DATE -	REVISED -

STATE OF ILLINOIS
DEPARTMENT OF TRANSPORTATION

MISCELLANEOUS DETAILS – BRIDGE APPROACH PAVEMENT (SPECIAL)
WESTBOUND WEST SIDE – STRUCTURE NO. 082-0163

SCALE: | SHEET NO. 1 OF 5 SHEETS | STA. | TO STA.

F.A.I. RTE.	SECTION	COUNTY	TOTAL SHEETS	SHEET NO.
64	82-2VB-2	ST. CLAIR	153	121
		CONTRACT NO. 76867		

FED. ROAD DIST. NO. 8 | ILLINOIS | FED. AID PROJECT