11-6-09 Letting, Item 082

F.A.P RTE.	SECTION	COUNTY	TOTAL SHEETS	SHEET NO.
312	73-VB-I	RANDOLPH	21 ~~18~~	1
FED. ROAD DIST. NO.	ILLINOIS	CONTRACT NO. 76C78		

~~21~~ 21+5=26

STATE OF ILLINOIS
DEPARTMENT OF TRANSPORTATION
DIVISION OF HIGHWAYS

FOR INDEX OF SHEETS, SEE SHEET NO. 2

PROPOSED HIGHWAY PLANS

FAP ROUTE 312 (IL 3)
SECTION 73–VB–I
DECK OVERLAY
RANDOLPH COUNTY

C–98–018–09

D–98–023–09

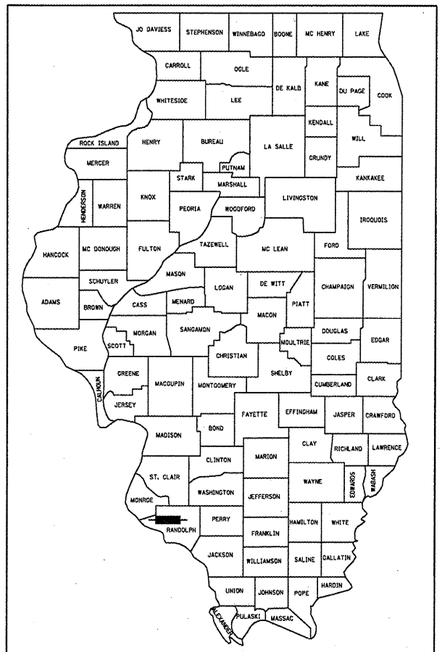

LOCATION OF SECTION INDICATED THUS:– –

R7W

T5S

N

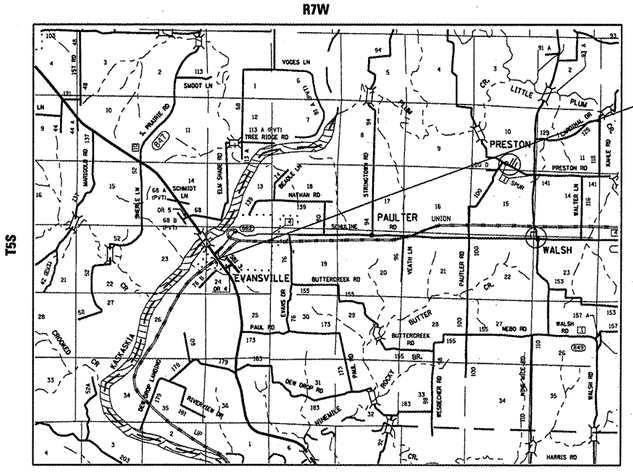

THREE SPAN STEEL STRUCTURE
DECK OVERLAY
STRUCTURE OVER UPRR
SN 079–0037
STATION 782+71.85
153'–9" BK TO BK ABUTMENTS

LAYOUT
0 MI 1 MI 2 MI 3 MI
1" = 1 MILE

GROSS LENGTH = 153.75' (0.029 MILES)
NET LENGTH = 153.75' (0.029 MILES)

100' 200' 300' — 1" = 100'
0 10' 20' 30' — 1" = 10'
0 50' 100' — 1" = 50'
0 50' 100' — 1" = 40'
0 50' 100' — 1" = 30'
0 50' 100' — 1" = 20'

FULL SIZE PLANS HAVE BEEN PREPARED USING STANDARD ENGINEERING SCALES. REDUCED SIZED PLANS WILL NOT CONFORM TO STANDARD SCALES. IN MAKING MEASUREMENTS ON REDUCED PLANS, THE ABOVE SCALES MAY BE USED.

J.U.L.I.E.
JOINT UTILITY LOCATION INFORMATION FOR EXCAVATION
1–800–892–0123
OR 811

TRAFFIC DATA:
2007 ADT = 3000
2030 ADT = 3800
SU = 5.0%
MU = 5.0%

LATITUDE: 38.0864
LONGITUDE: –89.9418

STATE OF ILLINOIS
DEPARTMENT OF TRANSPORTATION
DIVISION OF HIGHWAYS

SUBMITTED August 27 20 09
Mary C Jamie
DEPUTY DIRECTOR OF HIGHWAYS, REGION 5 ENGINEER
October 2, 20 09
Charles J. Ingersoll
ENGINEER OF DESIGN AND ENVIRONMENT
October 2, 20 09
Christine M. Reed
DIRECTOR OF HIGHWAYS, CHIEF ENGINEER

PROJECT ENGINEER: PATTI LeBEAU (618)346–3179
PROJECT MANAGER: ARTHUR MUEHLFELD (618) 346–3209

CONTRACT NO. 76C78

PRINTED BY THE AUTHORITY OF THE STATE OF ILLINOIS

INDEX OF SHEETS

1	COVER SHEET
2	INDEX OF SHEETS, HIGHWAY STANDARDS, GENERAL NOTES & COMMITMENTS
3A	SUMMARY OF QUANTITIES
4	TYPICAL SECTIONS
5	SCHEDULE OF QUANTITIES
6-7	PLAN SHEETS
8-9	STAGE 1 CONSTRUCTION
10-11	STAGE 2 CONSTRUCTION
11A-11B	PAVEMENT MARKING
12-20	BRIDGE PLANS
21-21B	DETAILS

GENERAL NOTES:

1. THE STANDARDS AND REVISION NUMBERS SHALL APPLY TO THIS PROJECT.

2. THE CONTRACTOR SHALL VERIFY ALL DIMENSIONS AND CONDITIONS IN THE FIELD PRIOR TO CONSTRUCTION AND ORDERING MATERIALS.

3. ILLINOIS STATE LAW REQUIRES A 48-HOUR NOTICE BE GIVEN TO UTILITIES WITHIN THE PROJECT AREA BEFORE DIGGING BY CALLING J.U.L.I.E. AND BY NOTIFYING NON-J.U.L.I.E. MEMBERS INDIVIDUALLY. AGENCIES KNOWN TO HAVE FACILITIES WITHIN THE PROJECT AREA ARE AS FOLLOWS:
   - AMERENIP
   - VILLAGE OF EVANSVILLE
   - NEW WAVE COMMUNICATIONS, INC.
   - VERIZON NORTH, INC.

   MEMBERS OF J.U.L.I.E. (800) 892-0123 OR 811 ARE INDICATED BY AN *.
   NON-J.U.L.I.E. MEMBERS MUST BE NOTIFIED INDIVIDUALLY.

4. "ROAD CONSTRUCTION AHEAD" SIGNS SHALL BE PLACED AT EACH END OF THE PROJECT AND ALL INTERSECTING SIDE ROADS AND WILL BE INCLUDED IN THE TRAFFIC CONTROL PAY ITEMS. ALL CONSTRUCTION SIGNS SHALL BE FLUORESCENT ORANGE, 48".

5. A QUANTITY OF 575 FOOT OF "TEMPORARY PAVEMENT MARKING - LINE 6" WHITE HAS BEEN INCLUDED IN THE PLANS FOR PAINTING THE BOTTOM 6" OF THE TEMPORARY CONCRETE BARRIER.

6. TRAFFIC CONTROL AND PROTECTION STANDARD 701201 IS TO PLACE THE INLET AND PIPE CULVERT.

7. THE PROPOSED REMOVE AND RE-ERECT STEEL PLATE BEAM GUARDRAIL ITEM FOR THE NORTH WEST QUADRANT OF THE PROJECT SHALL COMPLY WITH THE DETAILS IN THE PLANS AND MANURACTURER'S DETAILS IN ORDER TO MATCH THE EXISTING GUARDRAIL ELEMENTS THAT WERE ERECTED PRIOR TO JANUARY 1, 2007.

COMMITMENTS

NONE

HIGHWAY STANDARDS

000001-05
509001-01
609001-04
630001-08
630301-05
635006-03
635011-02
701201-03
701321-10
701901-01
704001-05
780001-02
781001-03
701001-02
701006-03
701311-03

FILE NAME = $FILEL$	USER NAME = $USER$	DESIGNED -	REVISED -	STATE OF ILLINOIS DEPARTMENT OF TRANSPORTATION	INDEX OF SHEETS, GENERAL NOTES, AND STANDRDS	F.A.P RTE.	SECTION	COUNTY	TOTAL SHEETS	SHEET NO.
		DRAWN -	REVISED -			312	73-VB-I	RANDOLPH	21	2
	PLOT SCALE = $SCALE$	CHECKED -	REVISED -					CONTRACT NO. 76C78		
	PLOT DATE = $DATE$	DATE -	REVISED -		SCALE: SHEET NO. OF SHEETS STA. TO STA.	FED. ROAD DIST. NO.	ILLINOIS	FED. AID PROJECT		

SUMMARY OF QUANTITIES

SUMMARY OF QUANTITIES

CODE NO	ITEM	UNIT	100% STATE TOTAL QUANTITIES	CONSTRUCTION TYPE CODE X131-2A		
40600200	BITUMINOUS MATERIALS (PRIME COAT)	TON	0.3	0.3		
40600300	AGGREGATE (PRIME COAT)	TON	2	2		
40600985	PORTLAND CEMENT CONCRETE SURFACE REMOVAL - BUTT JOINT	SQ YD	200	200		
40600990	TEMPORARY RAMP	SQ YD	36	36		
40603085	HOT-MIX ASPHALT BINDER COURSE, IL-19.0, N70	TON	18	18		
40603315	HOT-MIX ASPHALT SURFACE COURSE, MIX "C", N70	TON	50	50		
44000151	HOT-MIX ASPHALT SURFACE REMOVAL, 1/2"	SQ YD	395	395		
44004250	PAVED SHOULDER REMOVAL	SQ YD	17	17		
48102100	AGGREGATE WEDGE SHOULDER, TYPE B	TON	6	6		
48203100	HOT-MIX ASPHALT SHOULDERS	TON	24	24		
50102400	CONCRETE REMOVAL	CU YD	13.3	13.3		
50157300	PROTECTIVE SHIELD	SQ YD	249	249		
50300255	CONCRETE SUPERSTRUCTURE	CU YD	14.7	14.7		
50300260	BRIDGE DECK GROOVING	SQ YD	675	675		
50300300	PROTECTIVE COAT	SQ YD	720	720		
50300530	FLOOR DRAIN EXTENSION	EACH	12	12		
50500405	FURNISHING AND ERECTING STRUCTURAL STEEL	POUND	1530	1530		
50500715	JACK AND REMOVE EXISTING BEARINGS	EACH	12	12		
50800205	REINFORCEMENT BARS, EPOXY COATED	POUND	1520	1520		
50800515	BAR SPLICERS	EACH	24	24		
52000110	PREFORMED JOINT STRIP SEAL	FOOT	102.5	102.5		
52100010	ELASTOMERIC BEARING ASSEMBLY, TYPE I	EACH	6	6		
52100020	ELASTOMERIC BEARING ASSEMBLY, TYPE II	EACH	6	6		
52100520	ANCHOR BOLTS, 1"	EACH	24	24		
54213450	END SECTIONS 15"	EACH	1	1		
542A0220	PIPE CULVERTS, CLASS A, TYPE 1 15"	FOOT	70	70		
60235700	INLETS, TYPE A, TYPE 3 FRAME AND GRATE	EACH	1	1		
60605000	COMBINATION CONCRETE CURB AND GUTTER, TYPE B-6.24	FOOT	250	250		
60900515	CONCRETE THRUST BLOCKS	EACH	1	1		
*63000001	STEEL PLATE BEAM GUARD RAIL, TYPE A, 6 FOOT POSTS	FOOT	163	163		
*63100085	TRAFFIC BARRIER TERMINAL, TYPE 6	EACH	2	2		
*63100167	TRAFFIC BARRIER TERMINAL, TYPE 1 (SPECIAL) TANGENT	EACH	2	2		

SUMMARY OF QUANTITIES

CODE NO	ITEM	UNIT	100% STATE TOTAL QUANTITIES	CONSTRUCTION TYPE CODE X131-2A		
63200310	GUARDRAIL REMOVAL	FOOT	225	225		
63301000	REMOVE AND RE-ERECT STEEL PLATE BEAM GUARD RAIL	FOOT	250	250		
67000400	ENGINEER'S FIELD OFFICE, TYPE A	CAL MO	6	6		
67100100	MOBILIZATION	L SUM	1	1		
70100450	TRAFFIC CONTROL AND PROTECTION, STANDARD 701201	L SUM	1	1		
70101205	TRAFFIC CONTROL AND PROTECTION, STANDARD 701321 (SPECIAL)	EACH	1	1		
70106500	TEMPORARY BRIDGE TRAFFIC SIGNALS	EACH	1	1		
70106600	TEMPORARY BRIDGE TRAFFIC SIGNALS (STATE FURNISHED CONTROLLER)	EACH	1	1		
70106700	TEMPORARY RUMBLE STRIP	EACH	6	6		
70300100	SHORT-TERM PAVEMENT MARKING	FOOT	198	198		
70300220	TEMPORARY PAVEMENT MARKING - LINE 4"	FOOT	1867	1867		
70300240	TEMPORARY PAVEMENT MARKING - LINE 6"	FOOT	575	575		
70300260	TEMPORARY PAVEMENT MARKING - LINE 12"	FOOT	40	40		
70301000	WORK ZONE PAVEMENT MARKING REMOVAL	SQ FT	729	729		
70400100	TEMPORARY CONCRETE BARRIER	FOOT	575	575		
70400200	RELOCATE TEMPORARY CONCRETE BARRIER	FOOT	525	525		
*78000200	THERMOPLASTIC PAVEMENT MARKING - LINE 4"	FOOT	1520	1520		
*78008210	POLYUREA PAVEMENT MARKING TYPE I - LINE 4"	FOOT	347	347		
*78100100	RAISED REFLECTIVE PAVEMENT MARKER	EACH	9	9		
*78100105	RAISED REFLECTIVE PAVEMENT MARKER (BRIDGE)	EACH	2	2		
*78200410	GUARDRAIL MARKERS, TYPE A	EACH	8	8		
*78200520	BARRIER WALL MARKERS, TYPE B	EACH	2	2		
*78200530	BARRIER WALL MARKERS, TYPE C	EACH	2	2		
*78201000	TERMINAL MARKER - DIRECT APPLIED	EACH	2	2		
78300100	PAVEMENT MARKING REMOVAL	SQ FT	623	623		
78300200	RAISED REFLECTIVE PAVEMENT MARKER REMOVAL	EACH	9	9		
X0321468	PLUG EXISTING DECK DRAINS	EACH	16	16		
XZ193500	BRIDGE DECK MICROSILICA CONCRETE OVERLAY 2 1/4"	SQ YD	689	689		
Z0006204	BRIDGE DECK HYDRO-SCARIFICATION 1/2"	SQ YD	689	689		
Z0016002	DECK SLAB REPAIR (FULL DEPTH, TYPE II)	SQ YD	97	97		
Z0030250	IMPACT ATTENUATORS, TEMPORARY (NON-REDIRECTIVE), TEST LEVEL 3	EACH	2	2		

* SPECIALTY ITEMS

FILE NAME = $FILEL$	USER NAME = $USER$	DESIGNED -	REVISED -
		DRAWN -	REVISED -
	PLOT SCALE = $SCALE$	CHECKED -	REVISED -
	PLOT DATE = $DATE$	DATE -	REVISED -

STATE OF ILLINOIS
DEPARTMENT OF TRANSPORTATION

SUMMARY OF QUANTITIES

SCALE: | SHEET NO. OF SHEETS | STA. TO STA.

F.A.P. RTE.	SECTION	COUNTY	TOTAL SHEETS	SHEET NO.
312	73-VB-1	RANDOLPH	21	3
		CONTRACT NO. 76C78		

FED. ROAD DIST. NO. | ILLINOIS | FED. AID PROJECT

SUMMARY OF QUANTITIES

SUMMARY OF QUANTITIES			100% STATE	CONSTRUCTION TYPE CODE		
CODE NO	ITEM	UNIT	TOTAL QUANTITIES	X131-2A		
Z0030350	IMPACT ATTENUATORS, RELOCATE (NON-REDIRECTIVE), TEST LEVEL 3	EACH	2	2		
Z0048665	RAILROAD PROTECTIVE LIABILITY INSURANCE	L SUM	1	1		
X0325807	PORTLAND CEMENT CONCRETE SURFACE REMOVAL 1/2"	SQ YD	474	474		

SUMMARY OF QUANTITIES			TOTAL QUANTITIES	CONSTRUCTION TYPE CODE		
CODE NO	ITEM	UNIT		X131-2A		

FILE NAME = #FILEL#	USER NAME = #USER#	DESIGNED -	REVISED -
		DRAWN -	REVISED -
	PLOT SCALE = #SCALE#	CHECKED -	REVISED -
	PLOT DATE = #DATE#	DATE -	REVISED -

STATE OF ILLINOIS
DEPARTMENT OF TRANSPORTATION

SUMMARY OF QUANTITIES

SCALE: | SHEET NO. OF SHEETS | STA. TO STA.

F.A.P RTE.	SECTION	COUNTY	TOTAL SHEETS	SHEET NO.
312	73-VB-1	RANDOLPH	21	3A

CONTRACT NO. 76C78

FED. ROAD DIST. NO. | ILLINOIS | FED. AID PROJECT

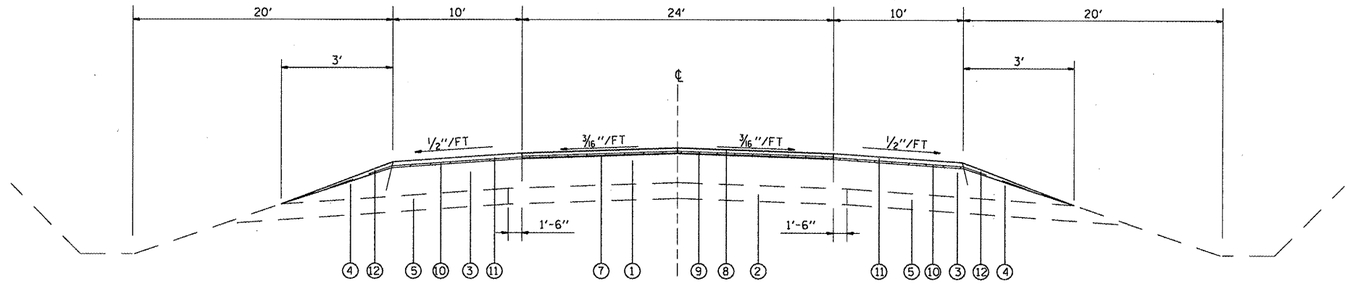

TANGENT SECTION
STA. 780+88.59 TO STA. 781+93.82
STA. 783+48.57 TO STA. 784+20.11

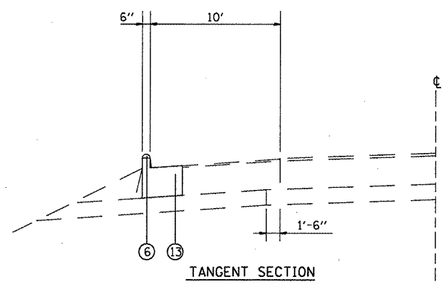

TANGENT SECTION
STA. 784+20.11 LT TO STA. 785+89.2 LT

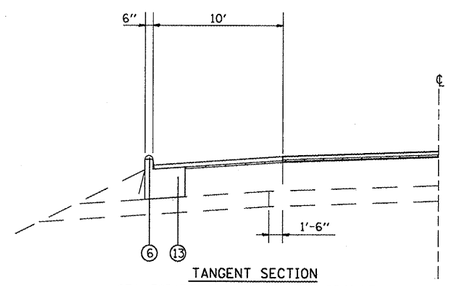

TANGENT SECTION
STA. 783+39.20 LT TO STA. 784+20.11 LT

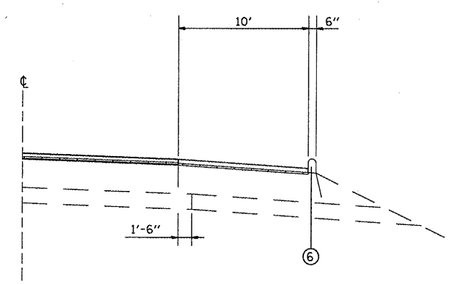

TANGENT SECTION
STA. 783+48.37 TO STA. 784+20.11

LEGEND

1. EXISTING CONCRETE PAVEMENT 8"
2. EXISTING STABILIZED SUB BASE 4"
3. EXISTING STABILIZED SHOULDER 8"
4. EXISTING AGGREGATE SHOULDER, TYPE A
5. EXISTING SUB BASE GRANULAR MATERIAL, TYPE C
6. EXISTING BITUMINOUS CURB
7. PROPOSED PORTLAND CEMENT CONCRETE SURFACE REMOVAL 1/2"
8. PROPOSED HOT-MIX ASPHALT SURFACE COURSE, MIX "C", N70 - 1 1/2"
9. PROPOSED HOT-MIX ASPHALT BINDER COURSE, IL-19.0, N70 - 3/4"
10. PROPOSED HOT-MIX ASPHALT SURFACE REMOVAL, 1/2"
11. PROPOSED HOT-MIX ASPHALT SHOULDERS-VARIABLE THICKNESS
12. PROPOSED AGGREGATE WEDGE
13. PROPOSED COMBINATION CONCRETE CURB AND GUTTER, TYPE B, 6.24

THE FOLLOWING HOT-MIX ASPHALT MIXTURE REQUIREMENTS ARE APPLICABLE TO THIS PROJECT:

MIXTURE USE	SURFACE	BINDER	SHOULDERS
AC/PG	PG 64-22	PG 64-22	PG 64-22
RAP % (MAX)	10%	15%	30%
DESIGN AIR VOIDS	4.0% @ Ndes=70	4.0% @ Ndes=70	2.0% @ Ndes=30
MIX COMPOSITION			
(GRADATION MIXTURE)		IL 19.0	
FRICTION AGG	MIXTURE "C"	MIXTURE "B"	BAM

TOP LIFT SHOULDERS - DESIGN THIS MIX AT 2.0% VOIDS AND ADD ASPHALT TO REDUCE VOIDS TO 1.5%.
PLAN QUANTITIES FOR BITUMINOUS CONCRETE SURFACE COURSE ITEMS ARE CALCULATED USING A UNIT WEIGHT OF 112 LB/SQ YD/IN (59.8 KG/SQ M/25 MM THICKNESS).

FILE NAME = $FILEL$	USER NAME = $USER$	DESIGNED -	REVISED -
		DRAWN -	REVISED -
	PLOT SCALE = $SCALE$	CHECKED -	REVISED -
	PLOT DATE = $DATE$	DATE -	REVISED -

STATE OF ILLINOIS
DEPARTMENT OF TRANSPORTATION

ROADWAY TYPICAL SECTIONS

SCALE: | SHEET NO. OF SHEETS | STA. TO STA.

F.A.P RTE.	SECTION	COUNTY	TOTAL SHEETS	SHEET NO.
312	73-VB-1	RANDOLPH	21	4

CONTRACT NO. 76C78

FED. ROAD DIST. NO. | ILLINOIS | FED. AID PROJECT

TEMPORARY RAMP SCHEDULE

LOCATION		WIDTH FOOT	LENGTH FOOT	TEMPORARY RAMP SQ YD
STA 781+93.8		32.0	5	18
STA 783+47.6		32.0	5	18
TOTAL				36

RESURFACING SCHEDULE

LOCATION STATION TO STATION	BITUMINOUS MATERIALS (PRIME COAT) TON	AGGREGATE (PRIME COAT) TON	HOT-MIX ASPHALT BINDER COURSE TON	HOT-MIX ASPHALT ASPHALT SURFACE COURSE, 1 1/2" TON	HOT-MIX ASPHALT SHOULDERS TON	AGGREGATE WEDGE SHOULDER TON	HOT-MIX ASPHALT SURFACE REMOVAL 1/2" SQ YD	PAVED SHOULDER REMOVAL SQ YD	PCC SURFACE REMOVAL - BUTT JOINT SQ YD	PORTLAND CEMENT CONCRETE SURFACE REMOVAL 1/2" SQ YD
STA 780+88.59 TO STA 781+94.98	0.17	0.79	9.6	29.5	14.4	5.9	236.4222		97.8	2526
STA 783+48.73 TO STA 784+20.11	0.11	0.51	8.2	20.4	8.7		158.6	16.1	97.8	1741
SUB-TOTAL	0.3	1.3	17.8	49.9	23.1	5.9	395.0	16.1	195.6	4267
TOTAL	0.3	2	18	50	24	6	395	17	196	4267

GUARDRAIL SCHEDULE

LOCATION	GUARDRAIL REMOVAL FOOT	STEEL PLATE BEAM GUARDRAIL, TYPE A FOOT	TRAFFIC BARRIER TERMINAL, TYPE 1 (SPECIAL), TANGENT EACH	TRAFFIC BARRIER TERMINAL, TYPE 6 EACH	REMOVE AND RE-ERECT STEEL PLATE BEAM GUARD RAIL FOOT
NW QUADRANT					250
SW QUADRANT	112.5	75	1	1	
SE QUADRANT	112.5	87.5	1	1	
TOTAL	225.0	163	2	2	250

PAVEMENT MARKING SCHEDULE

LOCATION	THERMOPLASTIC PAVEMENT MARKING			POLYUREA PAVEMENT MARKING								TEMPORARY PAVEMENT MARKING			WORK ZONE
	SKIP-DASH CENTERLINE 4" YELLOW	EDGE LINE 4" WHITE LT	EDGE LINE 4" WHITE RT	SKIP-DASH CENTERLINE 4" YELLOW	EDGE LINE 4" WHITE LT	EDGE LINE 4" WHITE RT	PAVEMENT MARKING REMOVAL	RAISED REFLECTIVE PAVEMENT MARKER REMOVAL	RAISED REFLECTIVE PAVEMENT MARKER 2-WAY AMBER	RAISED REFLECTIVE PAVEMENT MARKER (BRIDGE) 2-WAY AMBER	SHORT TERM PAVEMENT MARKING	SKIP-DASH CENTERLINE 4" YELLOW	EDGE LINE 4" WHITE LT	EDGE LINE 4" WHITE RT	PAVEMENT MARKING REMOVAL
STATION TO STATION	FOOT	FOOT	FOOT	FOOT	FOOT	FOOT	SQ FT	EACH	EACH	EACH	FOOT	FOOT	FOOT	FOOT	SQ FT
STA 778+97.06 TO STA 781+93.82	75	297	297				223	4	4		81	75	297	297	250
STA 781+93.82 TO STA 783+47.57				39	154	154	116	2		2	14	39	154	154	120
STA 783+47.57 TO STA 787+25.00	95	378	378				284	5	5		103	95	378	378	319
STOP BARS															40
SUB-TOTAL	170	675	675	39	154	154						209	829	829	
TOTAL	1520			347			623	11	9	2	198	1867			729

FILE NAME = $FILEL$

USER NAME = $USER$	DESIGNED -	REVISED -	
	DRAWN -	REVISED -	
PLOT SCALE = $SCALE$	CHECKED -	REVISED -	
PLOT DATE = $DATE$	DATE -	REVISED -	

STATE OF ILLINOIS
DEPARTMENT OF TRANSPORTATION

SCHEDULES

SCALE: | SHEET NO. 1 OF 1 SHEETS | STA. TO STA.

F.A.P RTE.	SECTION	COUNTY	TOTAL SHEETS	SHEET NO.
312	73-VB-I	RANDOLPH	21	5

CONTRACT NO. 76C78

FED. ROAD DIST. NO. | ILLINOIS | FED. AID PROJECT

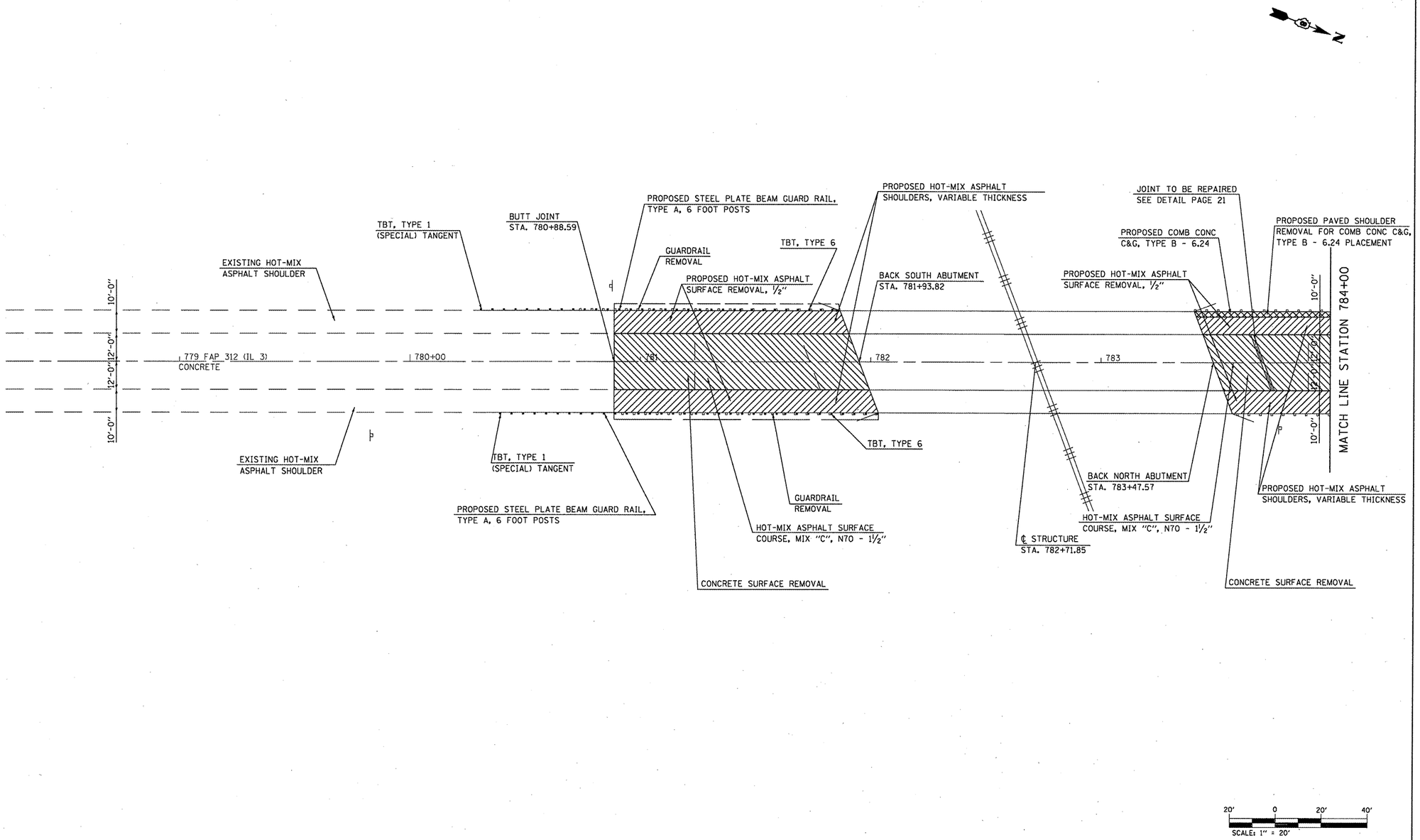

FILE NAME = $FILEL$	USER NAME = $USER$	DESIGNED -	REVISED -	STATE OF ILLINOIS DEPARTMENT OF TRANSPORTATION	PLAN VIEW	F.A.P. RTE.	SECTION	COUNTY	TOTAL SHEETS	SHEET NO.
		DRAWN -	REVISED -			312	73-VB-1	RANDOLPH	21	6
	PLOT SCALE = $SCALE$	CHECKED -	REVISED -					CONTRACT NO. 76C78		
	PLOT DATE = $DATE$	DATE -	REVISED -		SCALE: SHEET NO. OF SHEETS STA. 778+24.66 TO STA. 784+00			ILLINOIS FED. AID PROJECT		

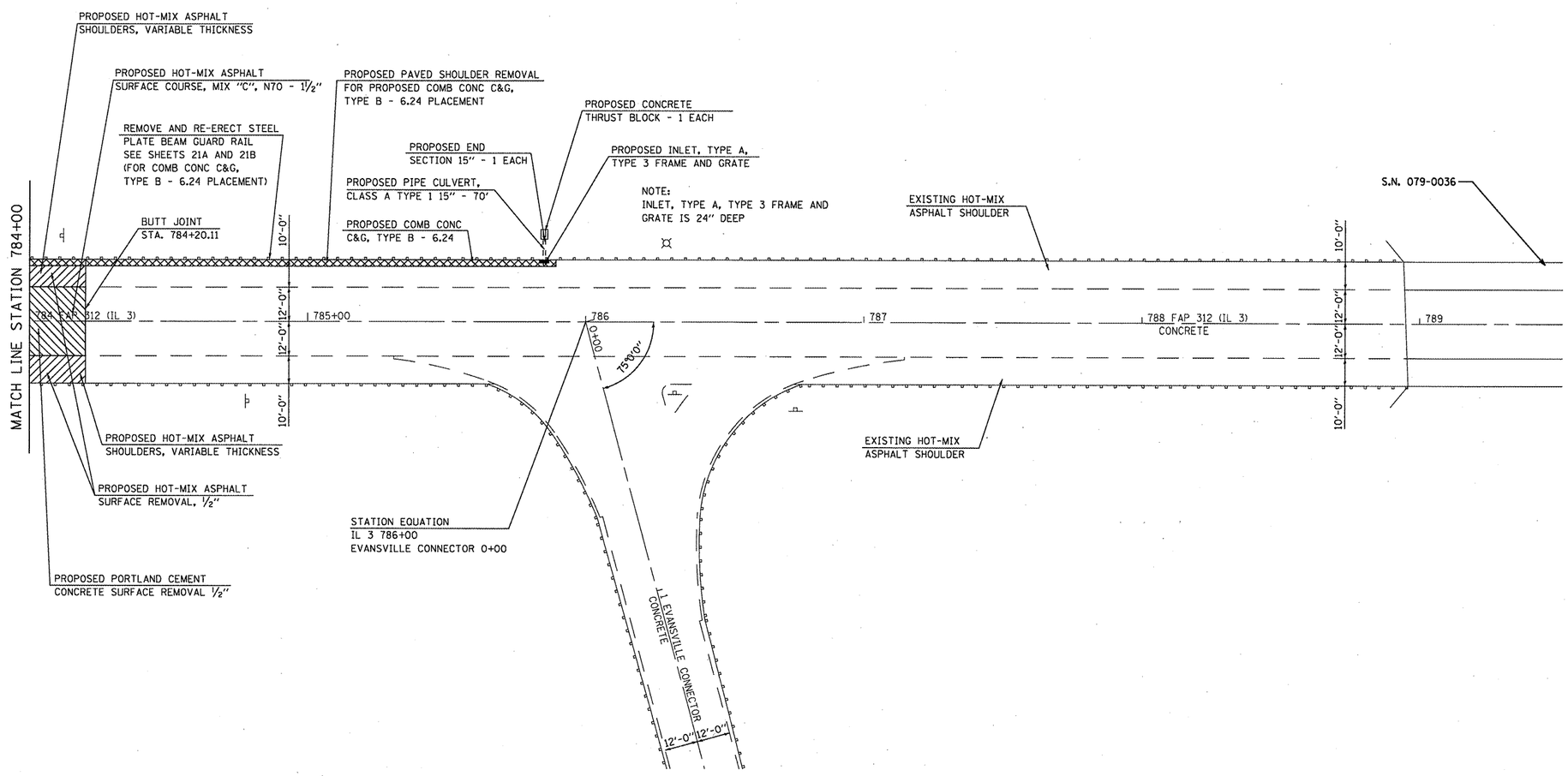

FILE NAME = $FILEL$	USER NAME = $USER$	DESIGNED -	REVISED -	STATE OF ILLINOIS DEPARTMENT OF TRANSPORTATION	PLAN VIEW			F.A.P. RTE.	SECTION	COUNTY	TOTAL SHEETS / SHEET NO.
		DRAWN -	REVISED -					312	73-VB-1	RANDOLPH	21 / 7
	PLOT SCALE = $SCALE$	CHECKED -	REVISED -							CONTRACT NO. 76C78	
	PLOT DATE = $DATE$	DATE -	REVISED -		SCALE:	SHEET NO. OF SHEETS	STA. 784+00 TO STA. 789+51.23			ILLINOIS FED. AID PROJECT	

LEGEND

- IMPACT ATTENUATOR
- TEMPORARY CONCRETE BARRIER
- BARRELS WITH STEADY BURNING LIGHT
- TEMPORARY BRIDGE TRAFFIC SIGNALS
- TYPE III BARRICADE

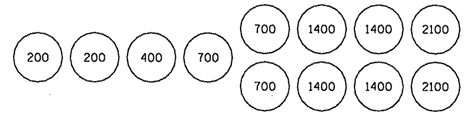

SAND MODULE IMPACT ATTENUATOR LAYOUT
(IF OPTION USED)

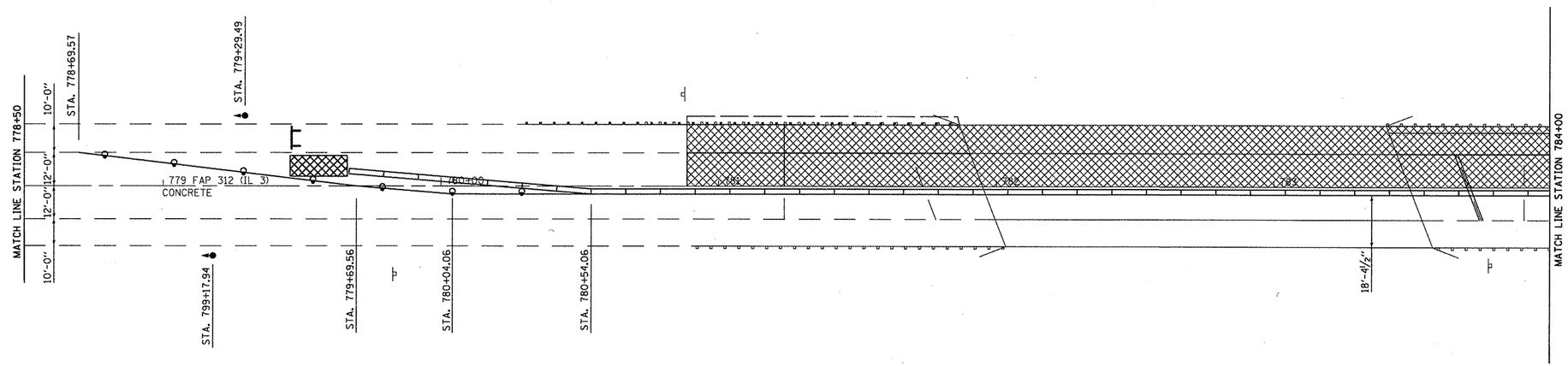

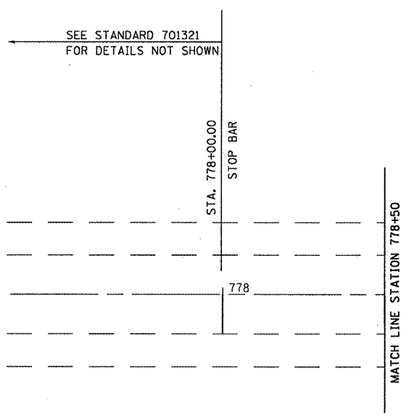

SEQUENCE OF CONSTRUCTION - STAGE I:

LOCATE AND PLACE STOP BARS AS SHOWN ON PLANS.
REMOVE SKIP-DASH, EDGE LINE AND ANY OTHER CONFLICTING PAVEMENT MARKING BETWEEN STOP BARS.
PLACE 575 FEET OF TEMPORARY CONCRETE BARRIER.
PLACE 2 IMPACT ATTENUATORS, TEMPORARY.
SEE STANDARD 701321 FOR DETAILS NOT SHOWN ON STAGE 1 SHEETS
PERFORM ALL NECESSARY WORK IN STAGE 1 WORK ZONE.
AFTER TRAFFIC SIGNALS ARE INSTALLED, COVER EXISTING STOP SIGNS AT INTERSECTION OF EVANSVILLE CONNECTOR AND INSTALL STOP HERE ON RED SIGNS.

20' 0 20' 40'
SCALE: 1" = 20'

FILE NAME = $FILEL$	USER NAME = $USER$	DESIGNED -	REVISED -	STATE OF ILLINOIS DEPARTMENT OF TRANSPORTATION	STAGE 1	F.A.P. RTE.	SECTION	COUNTY	TOTAL SHEETS	SHEET NO.
		DRAWN -	REVISED -			312	T3-VB-I	RANDOLPH	21	8
	PLOT SCALE = $SCALE$	CHECKED -	REVISED -					CONTRACT NO. 76C78		
	PLOT DATE = $DATE$	DATE -	REVISED -		SCALE: SHEET NO. OF SHEETS STA. 778+24.66 TO STA. 784+00			ILLINOIS FED. AID PROJECT		

LEGEND

- IMPACT ATTENUATOR
- TEMPORARY CONCRETE BARRIER
- BARRELS WITH STEADY BURNING LIGHT
- TEMPORARY BRIDGE TRAFFIC SIGNALS
- TYPE III BARRICADE

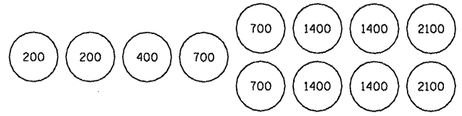

SAND MODULE IMPACT ATTENUATOR LAYOUT
(IF OPTION USED)

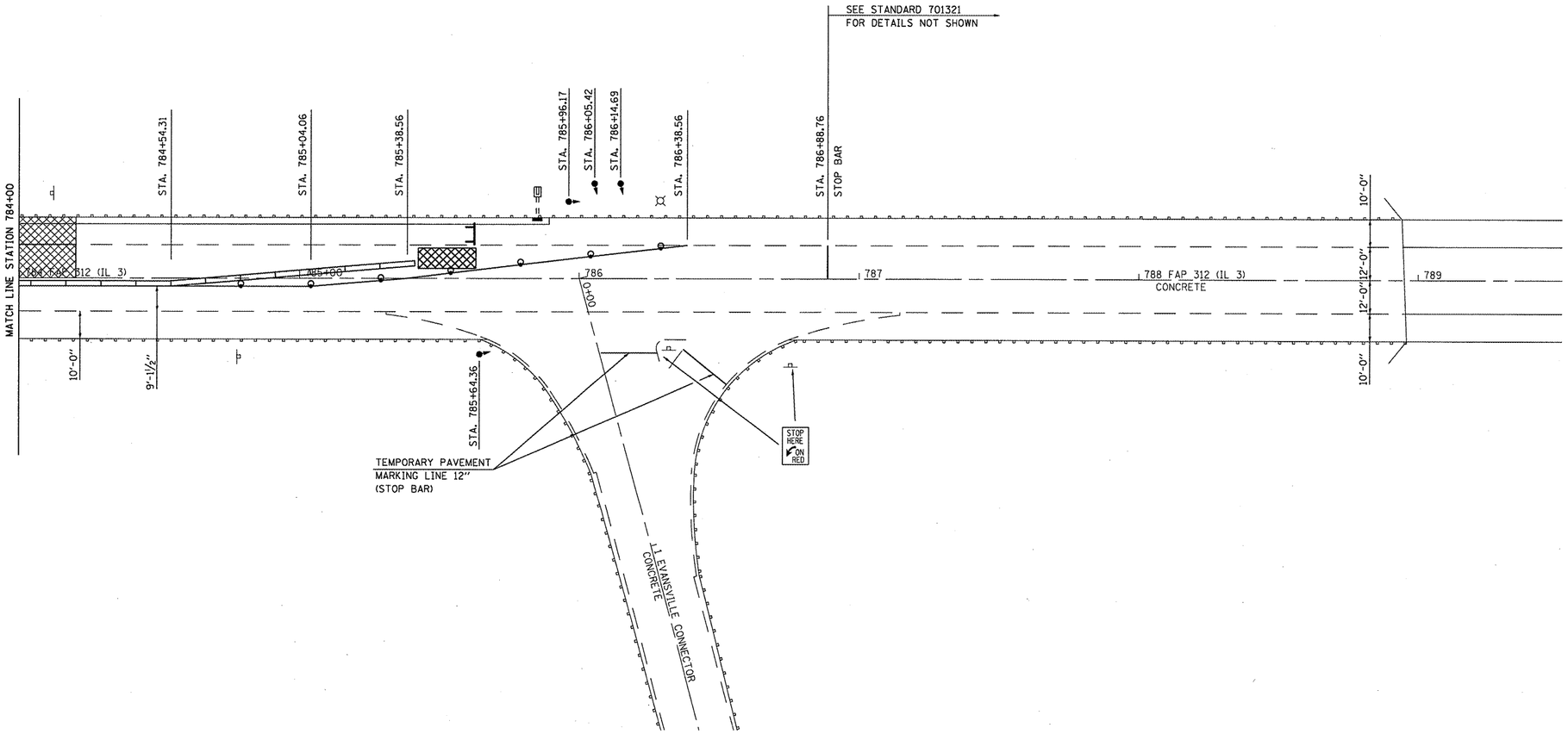

20' 0 20' 40'
SCALE: 1" = 20'

FILE NAME = $FILEL$	USER NAME = $USER$	DESIGNED -	REVISED -	STATE OF ILLINOIS DEPARTMENT OF TRANSPORTATION	STAGE 1	F.A.P. RTE.	SECTION	COUNTY	TOTAL SHEETS	SHEET NO.
		DRAWN -	REVISED -			312	73-VB-I	RANDOLPH	21	9
	PLOT SCALE = $SCALE$	CHECKED -	REVISED -					CONTRACT NO. 76C78		
	PLOT DATE = $DATE$	DATE -	REVISED -		SCALE: SHEET NO. OF SHEETS STA. 784+00 TO STA. 789+51.23			ILLINOIS FED. AID PROJECT		

LEGEND

- IMPACT ATTENUATOR
- TEMPORARY CONCRETE BARRIER
- BARRELS WITH STEADY BURNING LIGHT
- TEMPORARY BRIDGE TRAFFIC SIGNALS
- TYPE III BARRICADE

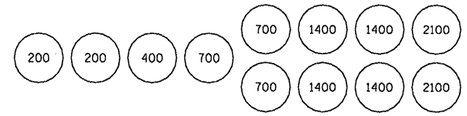

SAND MODULE IMPACT ATTENUATOR LAYOUT
(IF OPTION USED)

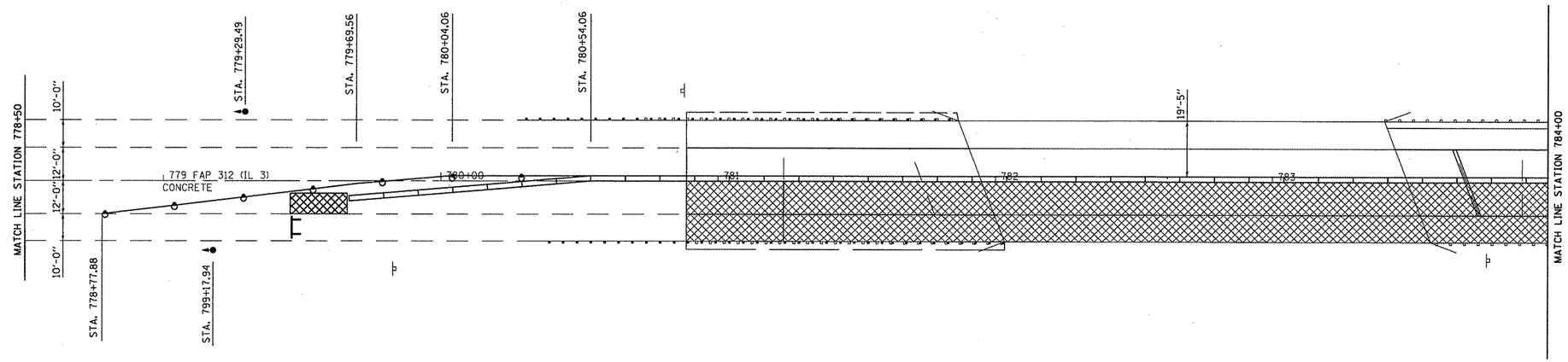

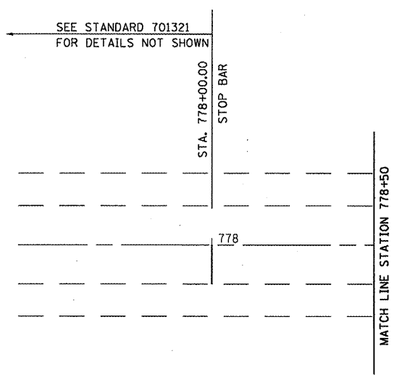

SEQUENCE OF CONSTRUCTION - STAGE II:

RELOCATE 525 FEET OF TEMPORARY CONCRETE BARRIER.
RELOCATE 2 IMPACT ATTENUATORS, TEMPORARY.
SEE STANDARD 701321 FOR DETAILS NOT SHOWN ON STAGE 2 SHEETS.
PERFORM ALL NECESSARY WORK IN STAGE 2 WORK ZONE.
AFTER TRAFFIC SIGNALS ARE REMOVED, UNCOVER EXISTING STOP SIGNS ÀT INTERSECTION OF EVANSVILLE CONNECTOR AND REMOVE STOP HERE ON RED SIGNS.

20' 0 20' 40'
SCALE: 1" = 20'

FILE NAME = $FILEL$	USER NAME = $USER$	DESIGNED -	REVISED -	STATE OF ILLINOIS DEPARTMENT OF TRANSPORTATION	STAGE 2	F.A.P. RTE.	SECTION	COUNTY	TOTAL SHEETS	SHEET NO.
		DRAWN -	REVISED -			312	73-VB-I	RANDOLPH	21	10
	PLOT SCALE = $SCALE$	CHECKED -	REVISED -					CONTRACT NO. 76C78		
	PLOT DATE = $DATE$	DATE -	REVISED -		SCALE: SHEET NO. OF SHEETS STA. 778+24.66 TO STA. 784+00		ILLINOIS FED. AID PROJECT			

LEGEND

- IMPACT ATTENUATOR
- TEMPORARY CONCRETE BARRIER
- BARRELS WITH STEADY BURNING LIGHT
- TEMPORARY BRIDGE TRAFFIC SIGNALS
- TYPE III BARRICADE

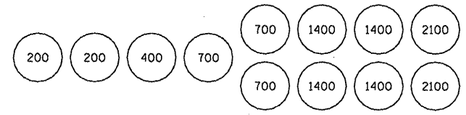

SAND MODULE IMPACT ATTENUATOR LAYOUT
(IF OPTION USED)

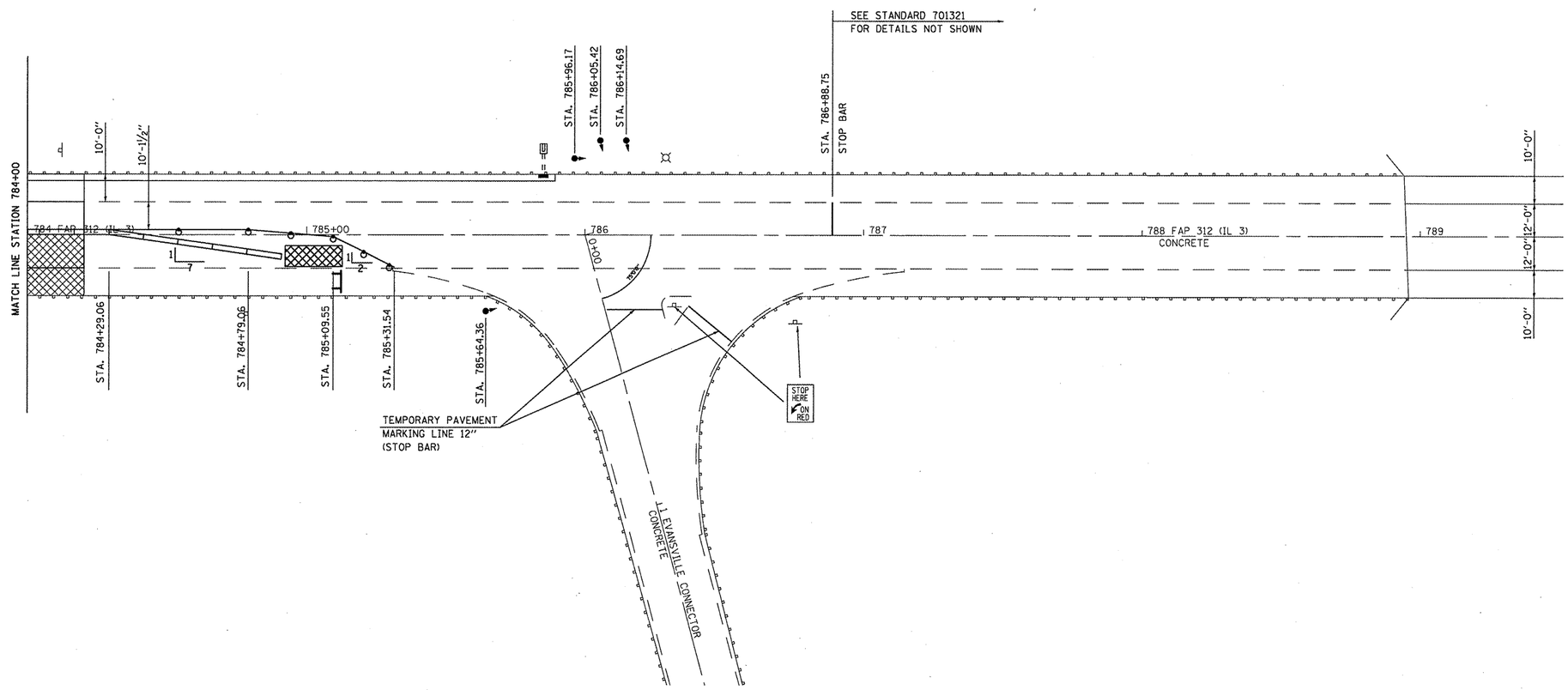

20' 0 20' 40'
SCALE: 1" = 20'

FILE NAME = $FILEL$	USER NAME = $USER$	DESIGNED -	REVISED -	STATE OF ILLINOIS DEPARTMENT OF TRANSPORTATION	STAGE 2	F.A.P. RTE.	SECTION	COUNTY	TOTAL SHEETS	SHEET NO.
		DRAWN -	REVISED -			312	73-VB-I	RANDOLPH	21	11
	PLOT SCALE = $SCALE$	CHECKED -	REVISED -					CONTRACT NO. 76C78		
	PLOT DATE = $DATE$	DATE -	REVISED -		SCALE: SHEET NO. OF SHEETS STA. 784+00 TO STA. 789+51.23			ILLINOIS FED. AID PROJECT		

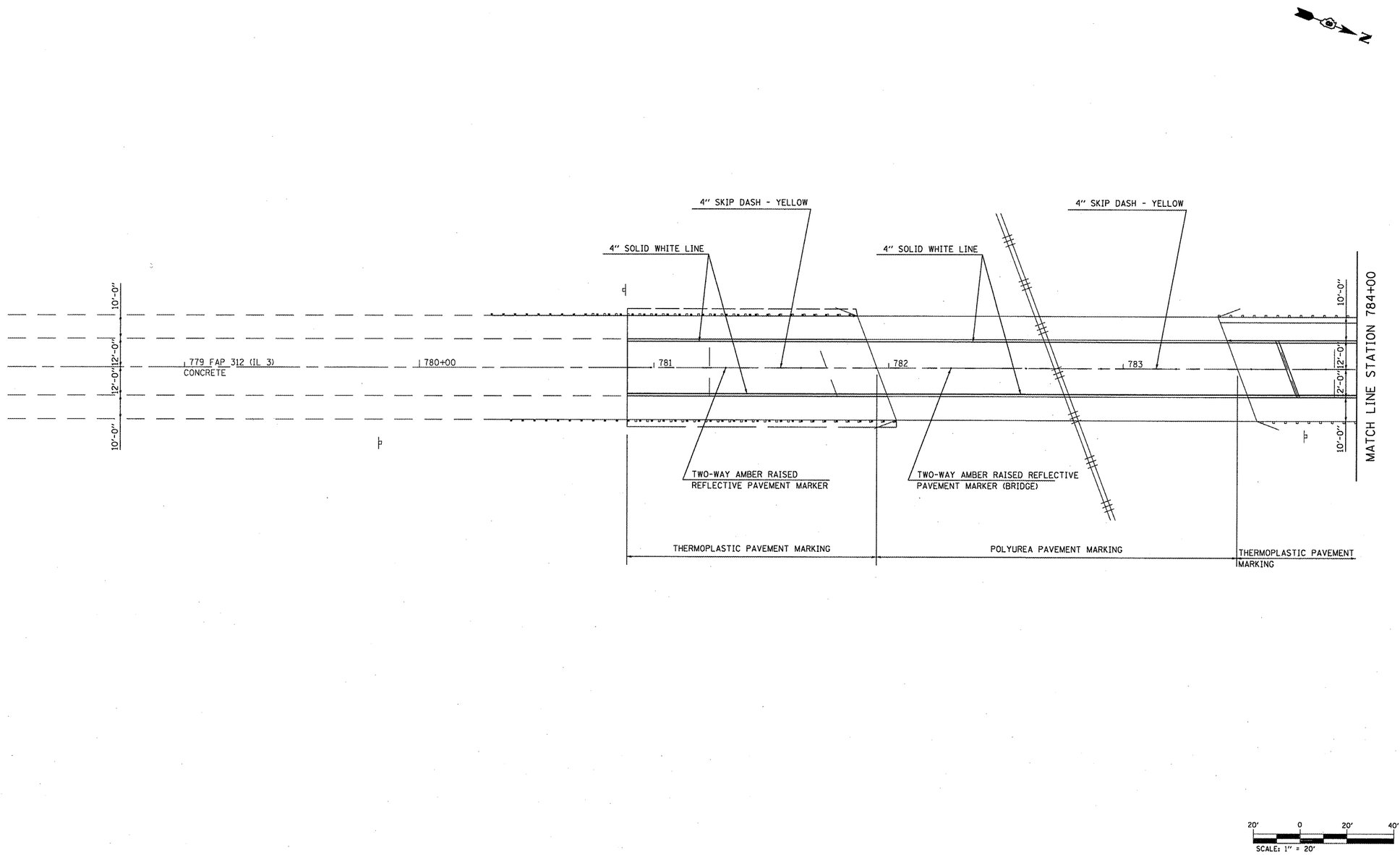

FILE NAME = $FILEL$	USER NAME = $USER$	DESIGNED -	REVISED -
		DRAWN -	REVISED -
	PLOT SCALE = $SCALE$	CHECKED -	REVISED -
	PLOT DATE = $DATE$	DATE -	REVISED -

STATE OF ILLINOIS
DEPARTMENT OF TRANSPORTATION

PAVEMENT MARKING

SCALE: | SHEET NO. OF SHEETS | STA. 778+24.66 TO STA. 784+00

F.A.P. RTE.	SECTION	COUNTY	TOTAL SHEETS	SHEET NO.
312	73-VB-1	RANDOLPH	21	11A

CONTRACT NO. 76C78

ILLINOIS FED. AID PROJECT

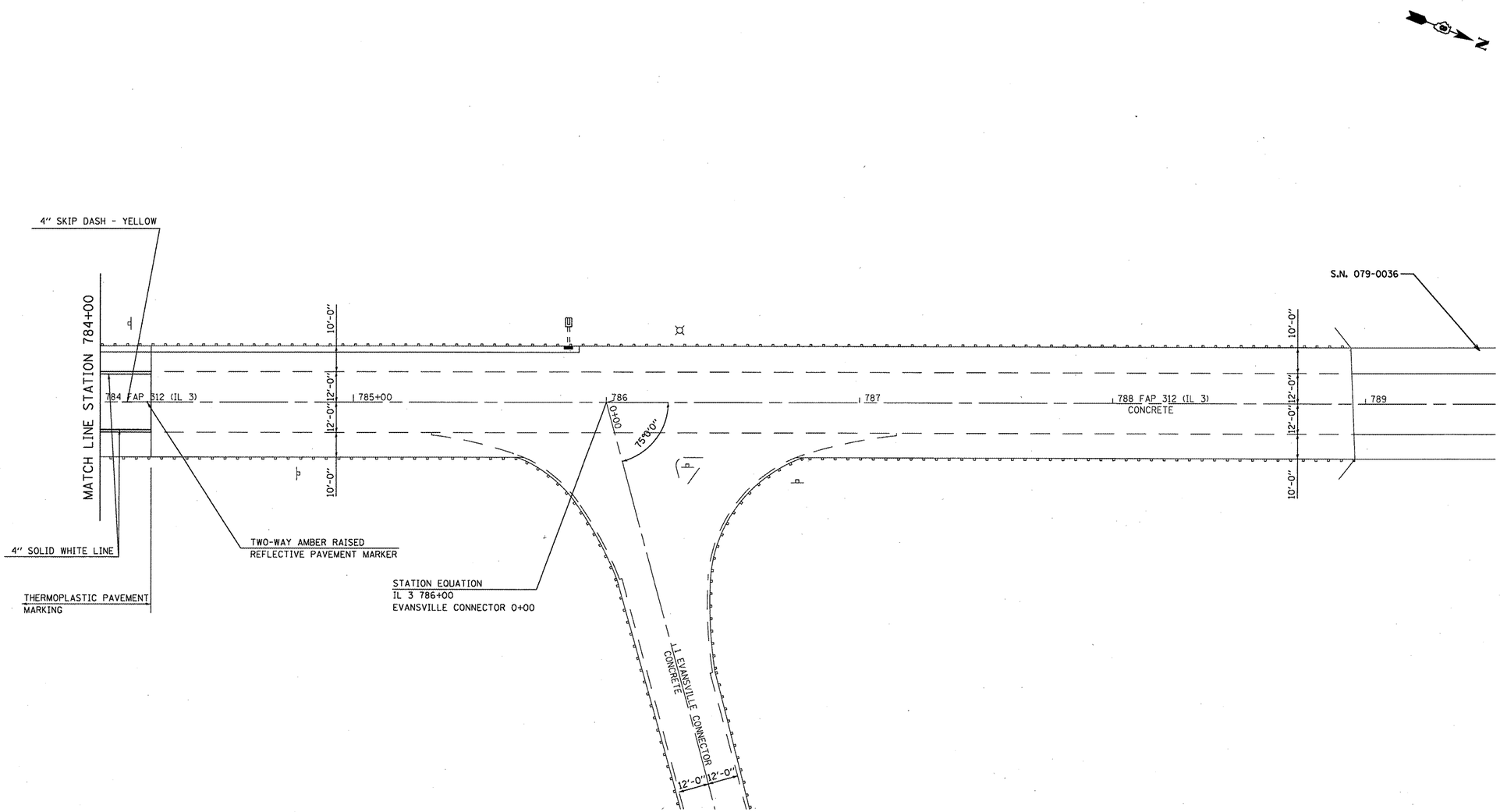

FILE NAME = $FILEL$	USER NAME = $USER$	DESIGNED -	REVISED -	STATE OF ILLINOIS DEPARTMENT OF TRANSPORTATION	PAVEMENT MARKING	F.A.P. RTE.	SECTION	COUNTY	TOTAL SHEETS	SHEET NO.
		DRAWN -	REVISED -			312	73-VB-I	RANDOLPH	21	11B
	PLOT SCALE = $SCALE$	CHECKED -	REVISED -					CONTRACT NO. 76C78		
	PLOT DATE = $DATE$	DATE -	REVISED -		SCALE: SHEET NO. OF SHEETS STA. 784+00 TO STA. 789+51.23		ILLINOIS	FED. AID PROJECT		

STATE OF ILLINOIS
DEPARTMENT OF TRANSPORTATION

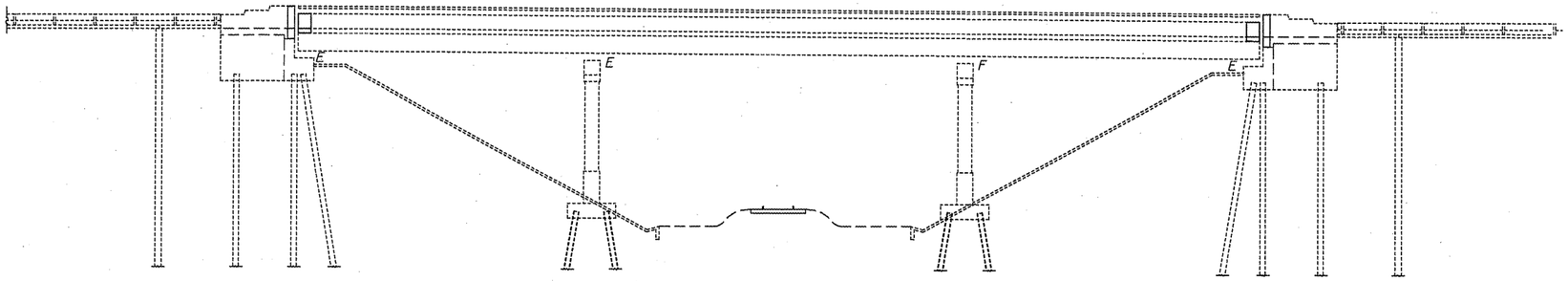

ELEVATION
(Looking West)

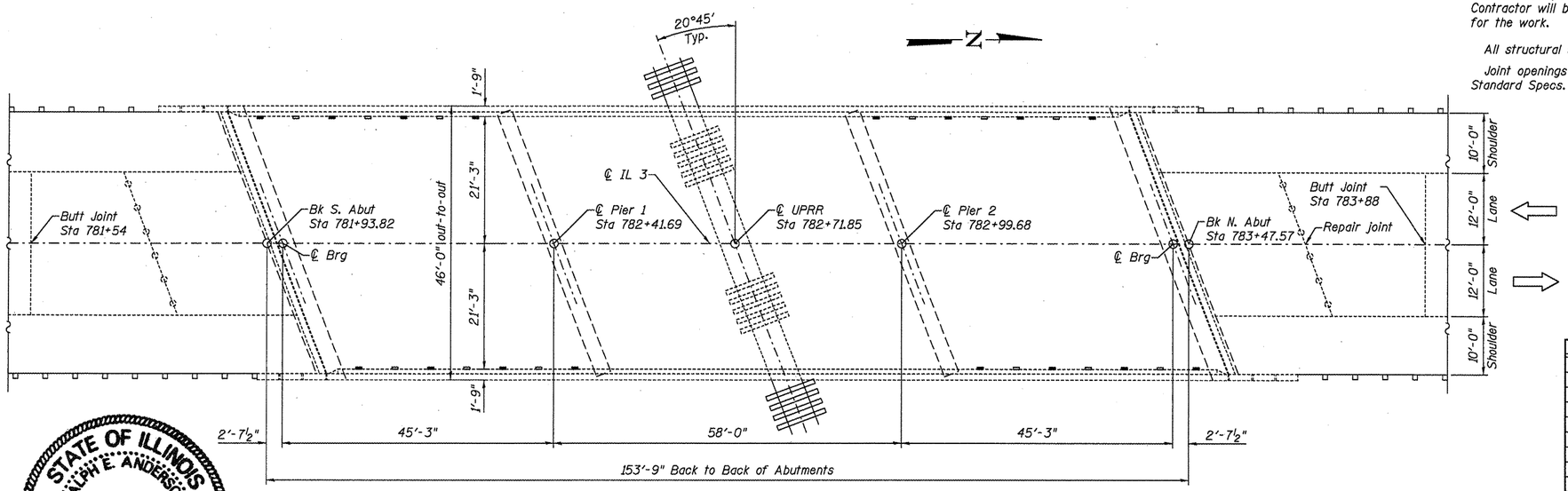

PLAN

STATE OF ILLINOIS
RALPH E. ANDERSON
081-004625
LICENSED STRUCTURAL ENGINEER
SPRINGFIELD

Expires Nov 30, 2010

▭ Extend existing drains

▭ Plug existing drain

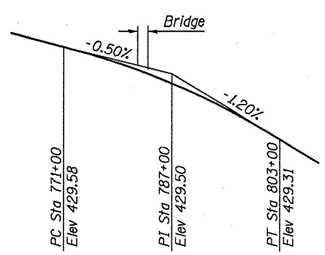

LVC = 3200'

PROFILE GRADE
(Along ℄ Roadway)

INDEX OF SHEETS

1. General Plan & Elevation
2. Deck Cross Section
3. Joint Details
4. Strip Seal Details
5. Drain Details
6. Deck Patching Survey
7. N. Abutment Bearings
8. S. Abutment Bearings
9. Bar Splicer Base Sheet

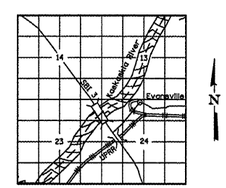

LOCATION SKETCH

GENERAL NOTES

Reinforcement bars shall conform to the requirements of ASTM A 706 Gr 60. See Special Provisions.

Reinforcement bars designated (E) shall be epoxy coated.

Prior to pouring the new concrete deck, all heavy or loose rust, loose mill scale, and other loose or potentially detrimental foreign material shall be removed from the surfaces in contact with concrete. Tightly adhered paint may remain unless otherwise noted. Removal shall be accomplished by methods that will not damage the steel and the cost will be included in the pay item covering removal of the existing concrete.

As directed by the Engineer, existing construction accessories welded to the top flange of beams and girders shall be removed. The weld areas shall be ground flush and inspected for cracks using magnetic particle testing (MT) or dye penetrant testing (PT) by qualified personnel approved by the Engineer.

Any cracks that cannot be removed by grinding ¼ inch deep shall be identified and reported to the Bureau of Bridges and Structures for further disposition. The cost of removing welded accessories, grinding and inspecting weld areas and grinding cracks will be paid for according to Article 109.04 of the Standard Specifications.

Plan dimensions and details relative to existing plans are subject to nominal construction variations. The Contractor shall field verify existing dimensions and details affecting new construction and make necessary approved adjustments prior to construction or ordering of materials. Such variations shall not be cause for additional compensation for a change in scope of the work, however, the Contractor will be paid for the quantity actually furnished at the unit price bid for the work.

All structural steel shall be AASHTO M 270 Grade 36, unless noted otherwise.

Joint openings shall be adjusted according to Article 520.04 of the Standard Specs.

TOTAL BILL OF MATERIAL

ITEM	UNIT	TOTAL
Concrete Removal	Cu. Yd.	13.3
Protective Shield	Sq. Yd.	249
Concrete Superstructure	Cu. Yd.	14.7
Bridge Deck Grooving	Sq. Yd.	675
Protective Coat	Sq. Yd.	720
Floor Drain Extension	Each	12
Furnishing and Erecting Structural Steel	Pound	1530
Jack And Remove Existing Bearings	Each	12
Reinforcement Bars, Epoxy Coated	Pound	1520
Bar Splicers	Each	24
Preformed Joint Strip Seal	Foot	102.5
Elastomeric Bearing Assembly, Type I	Each	6
Elastomeric Bearing Assembly, Type II	Each	6
Anchor Bolts, 1"	Each	24
Plug Existing Deck Drains	Each	16
Bridge Deck Microsilica Concrete Overlay 2¼"	Sq. Yd.	689
Bridge Deck Hydro-Scarification ½"	Sq. Yd.	689
Deck Slab Repair (Full Depth, Type II)	Sq. Yd.	97.0

GENERAL PLAN & ELEVATION
IL 3 OVER UPRR
SN 079-0037

DESIGNED	J. Uehle
CHECKED	B. Williams
DRAWN	J. Uehle
CHECKED	B. Williams

November 6, 2009
EXAMINED — ENGINEER OF STRUCTURAL SERVICES
PASSED — ENGINEER OF BRIDGES AND STRUCTURES

SHEET NO. 1	F.A.P. RTE.	SECTION	COUNTY	TOTAL SHEETS	SHEET NO.
9 SHEETS	312	73-VB-I	Randolph	21	12
			CONTRACT NO. 76C78		
	FED. ROAD DIST. NO.	ILLINOIS	FED. AID PROJECT		

STATE OF ILLINOIS
DEPARTMENT OF TRANSPORTATION

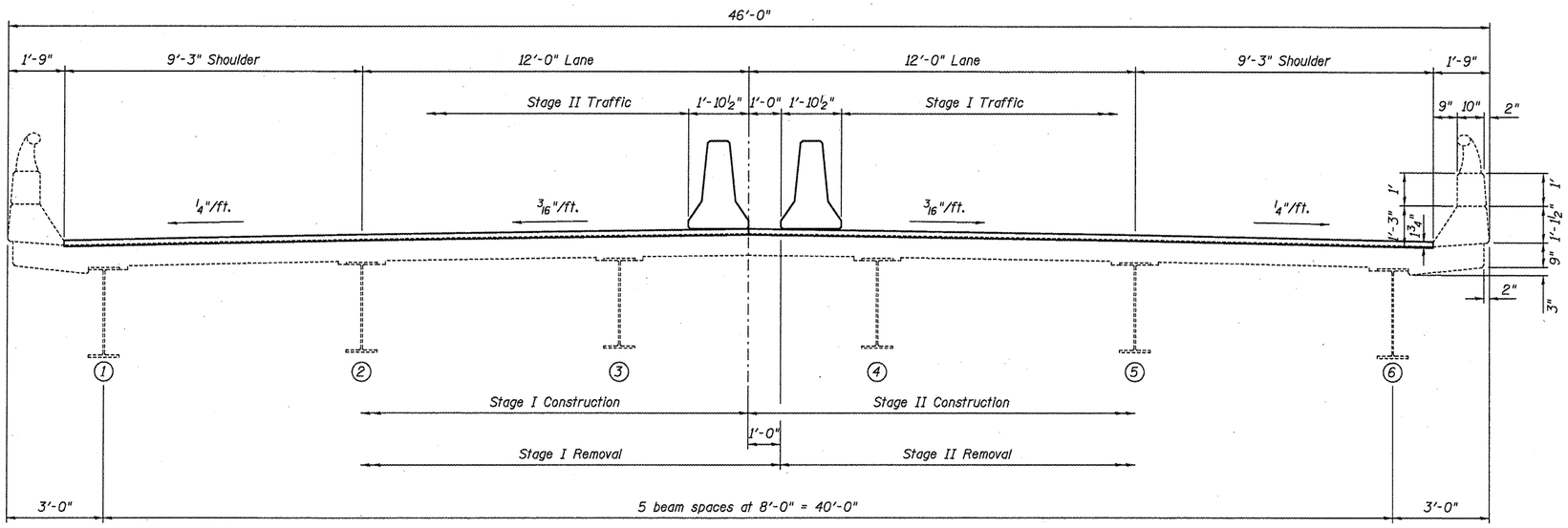

CROSS SECTION
(Looking North)

NOTES

The existing 8" deck shall be scarified ½" and overlayed with a 2¼" microsilica concrete overlay.

All drains shall be plugged or extended. See sheet 1 of 9 for locations.

DESIGNED	J. Uehle
CHECKED	B. Williams
DRAWN	J. Uehle
CHECKED	B. Williams

November 6, 2009

EXAMINED _____ ENGINEER OF STRUCTURAL SERVICES

PASSED _____ ENGINEER OF BRIDGES AND STRUCTURES

DECK CROSS SECTION
SN 079-0037

SHEET NO. 2	F.A.P. RTE.	SECTION	COUNTY	TOTAL SHEETS	SHEET NO.
9 SHEETS	312	73-VB-I	Randolph	21	13
			CONTRACT NO. 76C78		
	FED. ROAD DIST. NO. _	ILLINOIS	FED. AID PROJECT		

STATE OF ILLINOIS
DEPARTMENT OF TRANSPORTATION

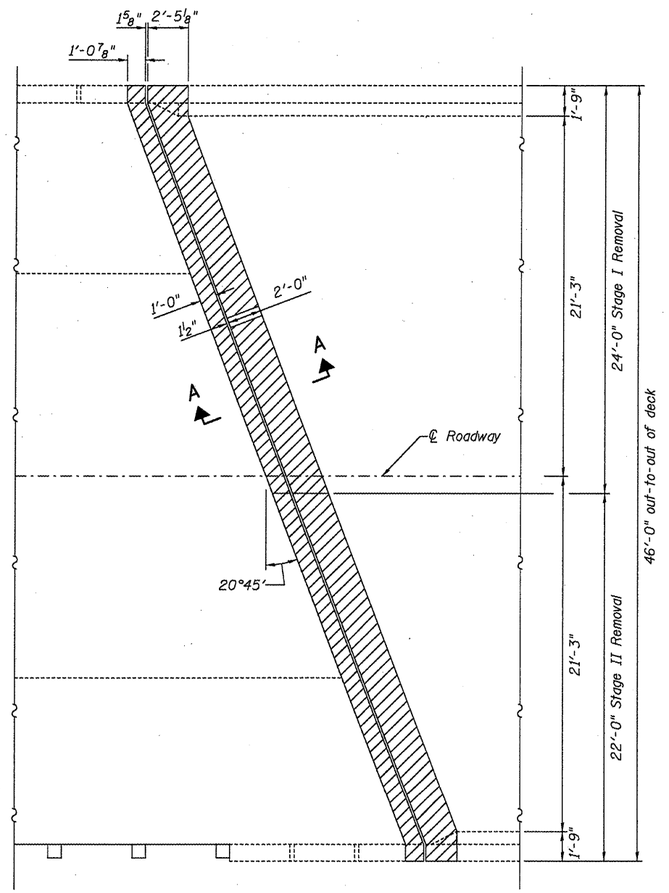

CONCRETE REMOVAL
(S. Abut shown, N. Abut similar)

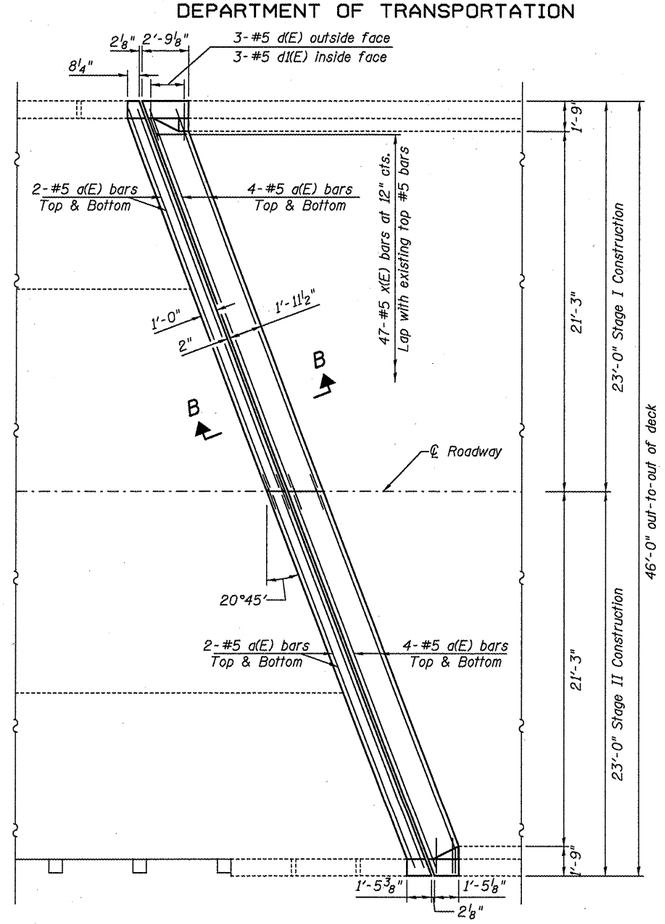

CONCRETE REPLACEMENT
(S. Abut shown, N. Abut similar)

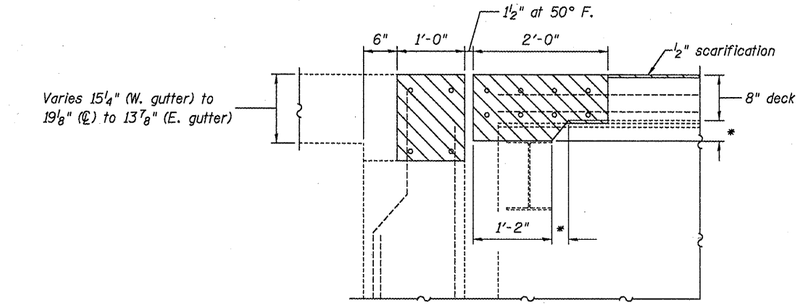

SECTION A-A

* Varies from 3½"(Bm 1) to 7¾"(℄) to 3½"(Bm 6)

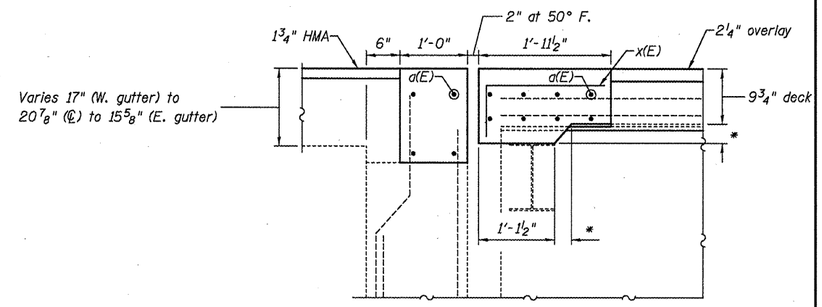

SECTION B-B

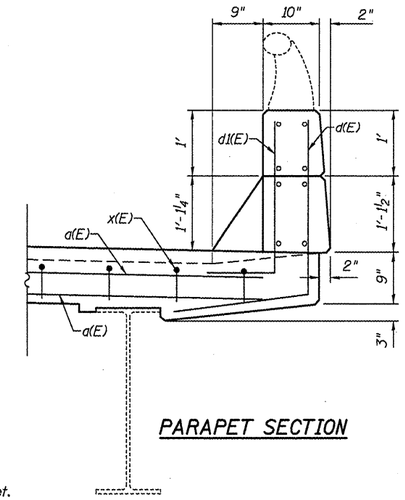

PARAPET SECTION

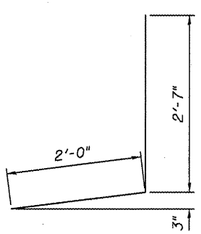

BAR d(E)

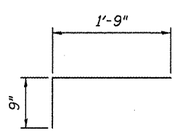

BAR X(E)

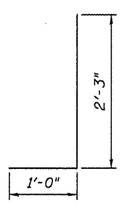

BAR d1(E)

BILL OF MATERIAL

Bar	No.	Size	Length	Shape
d(E)	48	#5	23'-6"	———
d(E)	12	#5	4'-7"	⌋
d_1(E)	12	#5	3'-3"	⌋
x(E)	94	#5	2'-6"	⌐
Concrete Removal			Cu. Yd.	13.3
Reinforcement Bars, Epoxy Coated			Pound	1520
Concrete Superstructure			Cu. Yd.	14.7

Bars indicated thus 1 x 3 - #5 etc. indicates 1 line of bars with 3 lengths per line.

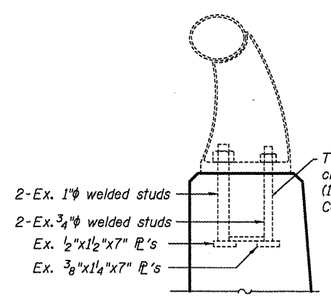

The existing rail post anchors shall be cleaned and cast into the reconstructed parapet. (1 rail post anchor at each corner) Cost included with CONCRETE SUPERSTRUCTURE.

RAILPOST ANCHOR

JOINT DETAILS
SN 079-0037

DESIGNED	J. Uehle
CHECKED	B. Williams
DRAWN	J. Uehle
CHECKED	B. Williams

November 6, 2009
EXAMINED — ENGINEER OF STRUCTURAL SERVICES
PASSED — ENGINEER OF BRIDGES AND STRUCTURES

SHEET NO. 3	F.A.P. RTE.	SECTION	COUNTY	TOTAL SHEETS	SHEET NO.
	312	73-VB-I	Randolph	21	14
9 SHEETS			CONTRACT NO. 76C78		
	FED. ROAD DIST. NO.	ILLINOIS	FED. AID PROJECT		

STATE OF ILLINOIS
DEPARTMENT OF TRANSPORTATION

* Granular or solid flux filled headed studs conforming to Article 1006.32 of the Std. Specs., automatically end welded.

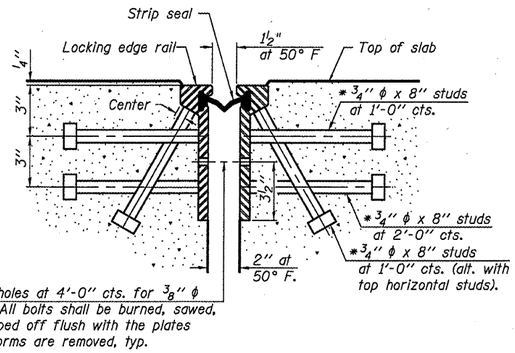

SECTION THRU ROLLED RAIL JOINT

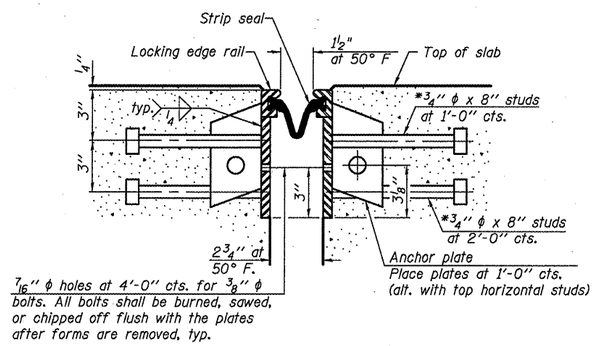

SECTION THRU WELDED RAIL JOINT

Notes:

The strip seal shall be made continuous and shall have a minimum thickness of ¼". The configuration of the strip seal shall match the configuration of the Locking Edge Rails. Open or "webbed" strip seal gland configurations are not permitted. The gland shall be sized for a maximum rated movement of 4 inches.

The height and thickness of the Locking Edge Rails shown are minimum dimensions. The actual configuration of the Locking Edge Rails and matching strip seal may vary from manufacturer to manufacturer. Flanged edge rails will not be allowed. Locking Edge Rails may be spliced at slope discontinuities and stage construction joints.

The manufacturer's recommended installation methods shall be followed.

The joint opening and deck dimensions detailed on the superstructure are based on a rolled rail expansion joint. If the Contractor elects to use the welded rail expansion joint, the opening and deck dimensions shall be modified according to the dimensions detailed on this sheet. Required modifications shall be made at no additional cost to the State.

All steel components shall be galvanized after fabrication according to Article 520.03 of the Standard Specifications.

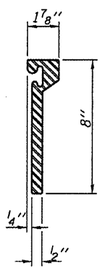

ROLLED EXTRUDED RAIL

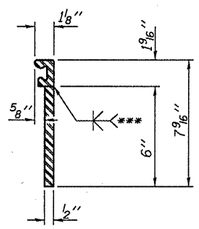

WELDED RAIL

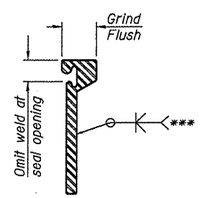

***Back gouge not required if complete joint penetration is verified by mock-up.

LOCKING EDGE RAILS

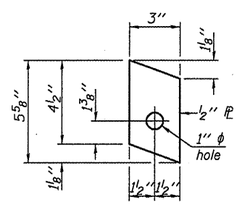

ANCHOR PL
(for welded rail)

LOCKING EDGE RAIL SPLICE

The inside of the locking edge rail groove shall be free of weld residue.

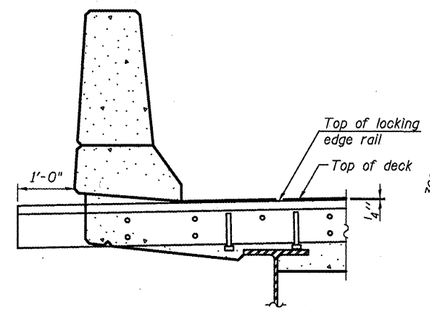

AT PARAPET

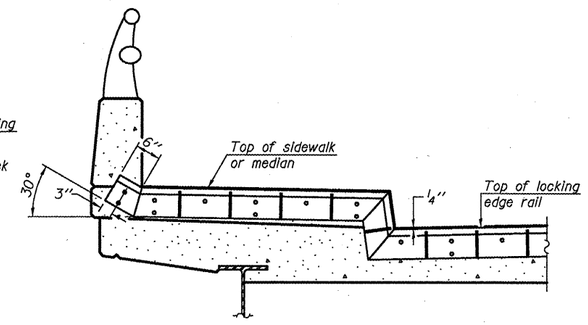

AT SIDEWALK OR MEDIAN

Shorter plates with a single row of studs at 12" cts. may be necessary on medians which are shallower than 9". See manufacturer's recommendation.

TYPICAL END TREATMENTS

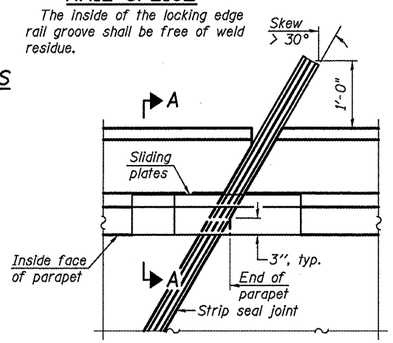

PLAN

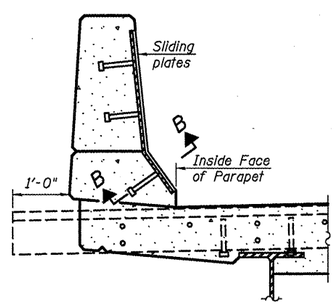

SECTION A-A

POINT BLOCK DETAILS
(for skews > 30°)

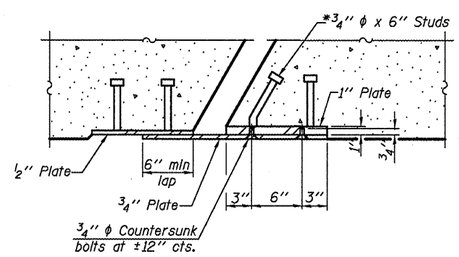

SECTION B-B

BILL OF MATERIAL

Item	Unit	Total
Preformed Joint Strip Seal	Foot	102.5

PREFORMED JOINT STRIP SEAL
SN 079-0037

DESIGNED	J. Uehle				
CHECKED	B. Williams				
DRAWN	J. Uehle				
CHECKED	B. Williams				

November 18, 2009
EXAMINED — ENGINEER OF STRUCTURAL SERVICES
PASSED — ENGINEER OF BRIDGES AND STRUCTURES

SHEET NO. 4	F.A.P. RTE.	SECTION	COUNTY	TOTAL SHEETS	SHEET NO.
SHEETS 9	312	73-VB-I	Randolph	21	15
			CONTRACT NO. 76C78		
	FED. ROAD DIST. NO. _	ILLINOIS	FED. AID PROJECT		

STATE OF ILLINOIS
DEPARTMENT OF TRANSPORTATION

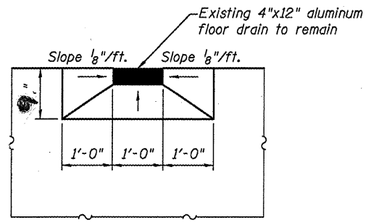

DRAIN DETAIL

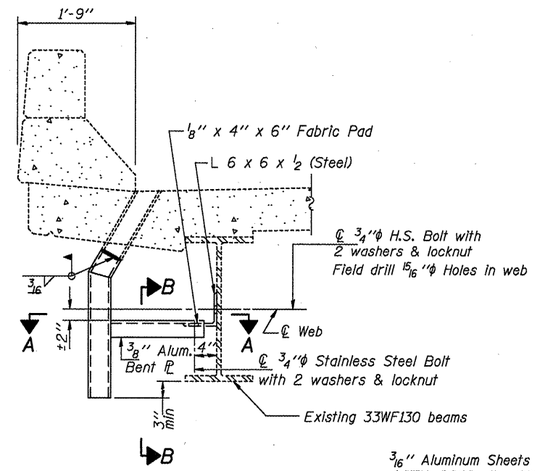

SECTION AT DRAIN

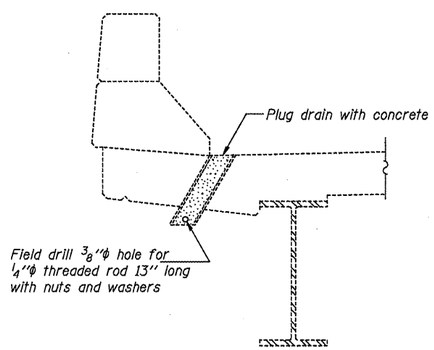

PLUG DRAIN DETAIL

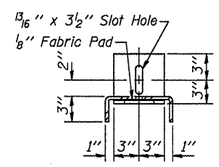

SECTION B-B

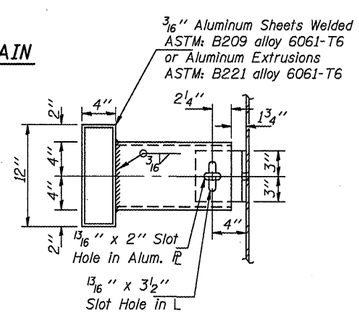

SECTION A-A

DESIGNED	J. Uehle
CHECKED	B. Williams
DRAWN	J. Uehle
CHECKED	B. Williams

November 6, 2009
EXAMINED — ENGINEER OF STRUCTURAL SERVICES
PASSED — ENGINEER OF BRIDGES AND STRUCTURES

DRAIN DETAILS
SN 079-0037

SHEET NO. 5	F.A.P. RTE.	SECTION	COUNTY	TOTAL SHEETS	SHEET NO.
	312	73-VB-I	Randolph	21	16
SHEETS 9			CONTRACT NO. 76C78		
	FED. ROAD DIST. NO. _	ILLINOIS	FED. AID PROJECT		

STATE OF ILLINOIS
DEPARTMENT OF TRANSPORTATION

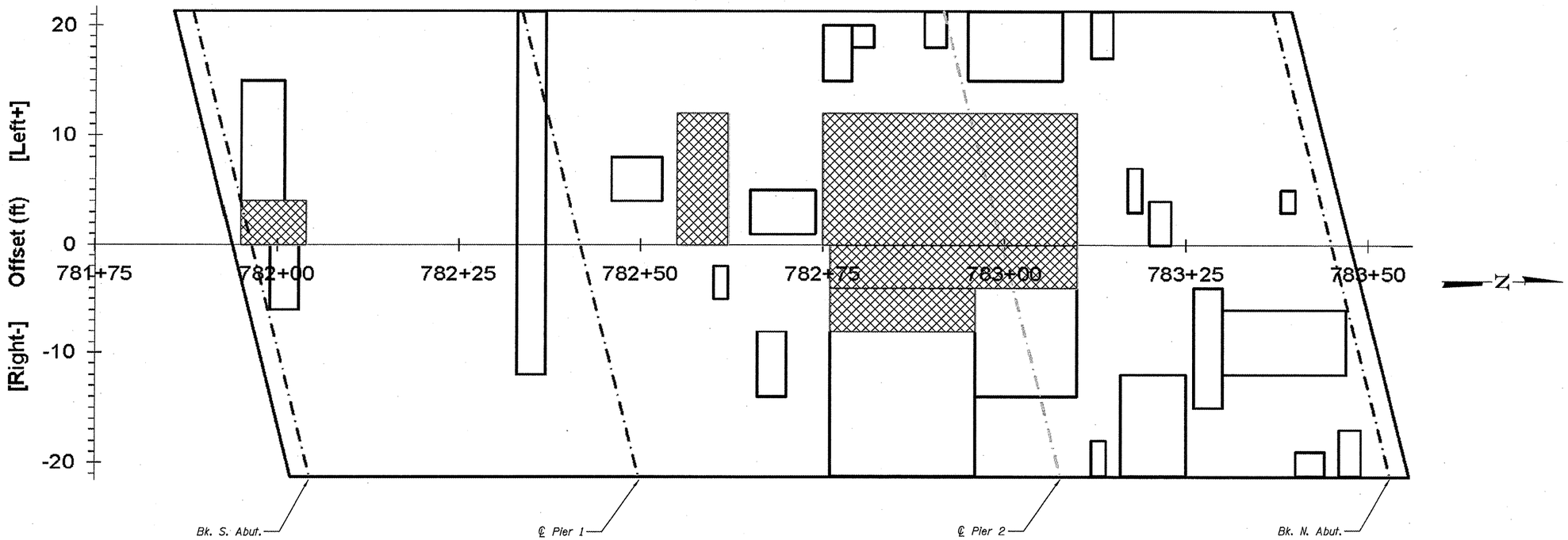

Patch #	Start Sta	End Sta	Offsets (ft) From		To		Length (ft.)	Width (ft.)	Area (sy)	Full or Partial Depth	Type I or II (Full Depth)
1	781+99	782+03	0	Rt	6	Rt	4	6	2.67	P	
2	782+33	782+37	12	Rt	21.25	Lt	4	33.25	14.78	P	
3	782+60	782+62	2	Rt	5	Rt	2	3	0.67	P	
4	782+66	782+70	8	Rt	14	Rt	4	6	2.67	P	
5	782+76	782+96	8	Rt	21.25	Rt	20	13.25	29.44	P	
6	782+96	783+10	4	Rt	14	Rt	14	10	15.56	P	
7	782+76	783+10	0	Rt	4	Rt	34	4	15.11	F	Type II
8	782+76	782+96	4	Rt	8	Rt	20	4	8.89	F	Type II
9	783+12	783+14	18	Rt	21.25	Rt	2	3.25	0.72	P	
10	783+16	783+25	12	Rt	21.25	Rt	9	9.25	9.25	P	
11	783+26	783+30	4	Rt	15	Rt	4	11	4.89	P	
12	783+30	783+47	6	Rt	12	Rt	17	6	11.33	P	
13	783+40	783+44	19	Rt	21.25	Rt	4	2.25	1.00	P	
14	783+46	783+49	17	Rt	21.25	Rt	3	4.25	1.42	P	
15	781+95	782+01	4	Lt	15	Lt	6	11	7.33	P	
16	781+95	782+04	0	Lt	4	Lt	9	4	4.00	F	Type II
17	782+46	782+53	4	Lt	8	Lt	7	4	3.11	P	
18	782+55	782+62	0	Lt	12	Lt	7	12	9.33	F	Type II
19	782+65	782+74	1	Lt	5	Lt	9	4	4.00	P	
20	782+75	783+10	0	Lt	12	Lt	35	12	46.67	F	Type II
21	782+75	782+79	15	Lt	20	Lt	4	5	2.22	P	
22	782+79	782+82	18	Lt	20	Lt	3	2	0.67	P	
23	782+89	782+92	18	Lt	21.25	Lt	3	3.25	1.08	P	
24	782+95	783+08	15	Lt	21.25	Lt	13	6.25	9.03	P	
25	783+12	783+15	17	Lt	21.25	Lt	3	4.25	1.42	P	
26	783+17	783+19	3	Lt	7	Lt	2	4	0.89	P	
27	783+20	783+23	0	Lt	4	Lt	3	4	1.33	P	
28	783+38	783+40	3	Lt	5	Lt	2	2	0.44	P	

Deck Slab Repair (Partial) 126 sq. yd

Deck Slab Repair (Full Depth, Type I) 0 sq. yd.

Deck Slab Repair (Full Depth, Type II) 84 sq. yd.

NOTES

Partial depth patches are paid for with the overlay and are shown for information only.

The areas of deck repairs are estimated.
The deck survey and schedule shows 84 cu. yds. of full depth deck slab repairs.
Plan quantities have been increased by 15% (to 97 cu. yds.)

The Engineer shall show actual patch locations on as-built plans.

Deck Survey 7-1-09

DESIGNED	J. Uehle
CHECKED	B. Williams
DRAWN	J. Uehle
CHECKED	B. Williams

November 6, 2009
EXAMINED M. Carl Knopp
ENGINEER OF STRUCTURAL SERVICES
PASSED Ralph E. Anderson
ENGINEER OF BRIDGES AND STRUCTURES

DECK PATCHING SURVEY
SN 079-0037

SHEET NO. 6	F.A.P. RTE.	SECTION	COUNTY	TOTAL SHEETS	SHEET NO.
SHEETS 9	312	73-VB-I	Randolph	21	17
			CONTRACT NO. 76C78		
	FED. ROAD DIST. NO. _	ILLINOIS	FED. AID PROJECT		

STATE OF ILLINOIS
DEPARTMENT OF TRANSPORTATION

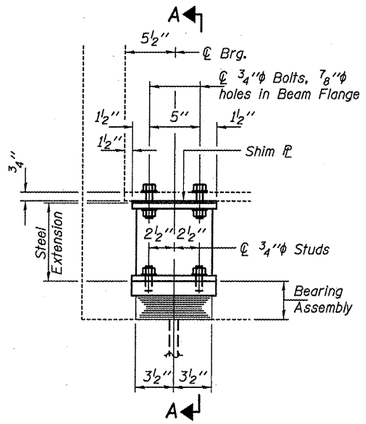

ELEVATION AT ABUTMENT

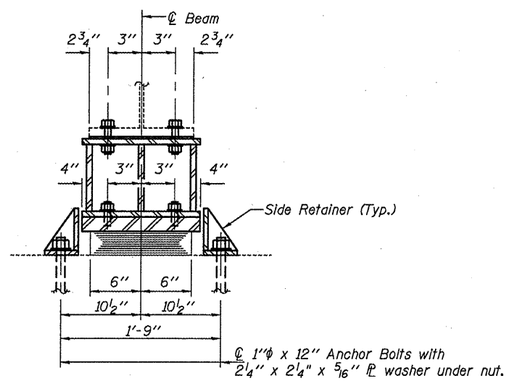

SECTION A-A

TYPE I ELASTOMERIC EXP. BRG.

BEAM REACTIONS

RP	(K)	20.9
RL	(K)	39.2
Imp.	(K)	11.0
R (Total)	(K)	71.1

Notes:
Diaphragm removal and reinstallation may be required to facilitate drilling holes. Cost included with Furnishing and Erecting Structural Steel.
New steel extensions, shim plates and connection bolts are included with Furnishing and Erecting Structural Steel.
Prior to ordering any material, the Contractor shall verify in the field all bearing height and shim thickness dimensions.
Min. jack capacity = 35 Tons.
Anchor bolts shall be ASTM F1554 all-thread (or an Engineer-approved alternate material) of the grade(s) and diameter(s) specified. ASTM A307 Grade C anchor bolts may be used in lieu of ASTM F1554 Grade 36 (Fy=36ksi). The corresponding specified grade of AASHTO M314 anchor bolts may be used in lieu of ASTM F1554.
Anchor bolts at fixed bearings may be either cast in place or installed in holes drilled after the supported member is in place.
Drilled and set anchor bolts shall be installed according to Article 521.06 of the Standard Specifications.
Side retainers shall be included in the cost of Elastomeric Bearing Assembly, Type I.

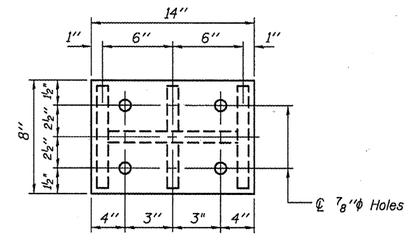

PLAN TOP AND BOTTOM PLATE

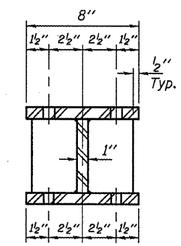

SECTION B-B

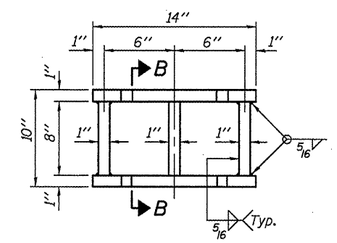

STEEL EXTENSION DETAIL

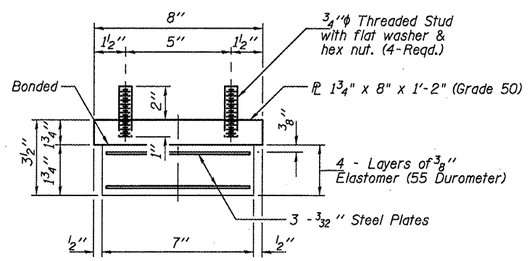

BEARING ASSEMBLY

Note:
Shim plates shall not be placed under Bearing Assembly.

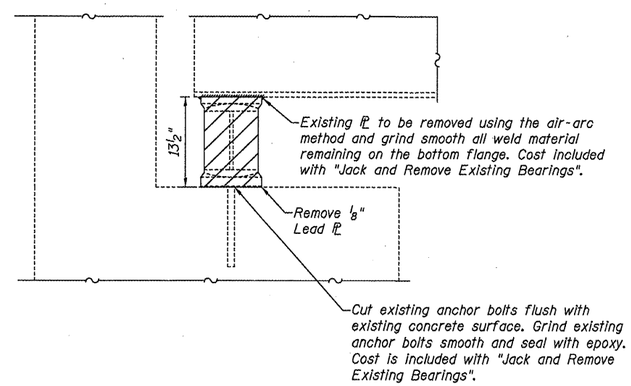

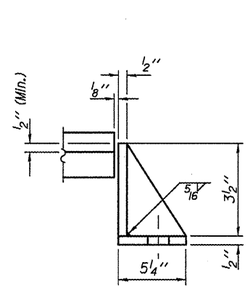

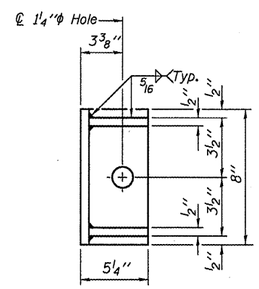

SIDE RETAINER

Equivalent rolled angle with stiffeners will be allowed in lieu of welded plates.

BILL OF MATERIAL

Item	Unit	Total
Elastomeric Bearing Assembly, Type I	Each	6
Jack and Remove Existing Bearings	Each	6
Furnishing and Erecting Structural Steel	Pound	830
Anchor Bolts 1"φ	Each	12

N. ABUTMENT BEARINGS
SN 079-0037

DESIGNED	J. Uehle
CHECKED	B. Williams
DRAWN	J. Uehle
CHECKED	B. Williams

November 6, 2009
EXAMINED — ENGINEER OF STRUCTURAL SERVICES
PASSED — ENGINEER OF BRIDGES AND STRUCTURES

TYI/REPS 12-03-2008

SHEET NO. 7	F.A.P. RTE.	SECTION	COUNTY	TOTAL SHEETS	SHEET NO.
SHEETS 9	312	73-VB-I	Randolph	21	18
			CONTRACT NO. 76C78		
	FED. ROAD DIST. NO. _	ILLINOIS	FED. AID PROJECT		

STATE OF ILLINOIS
DEPARTMENT OF TRANSPORTATION

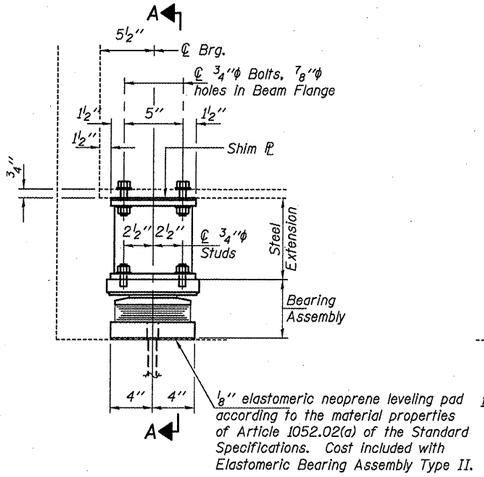

ELEVATION AT ABUTMENT

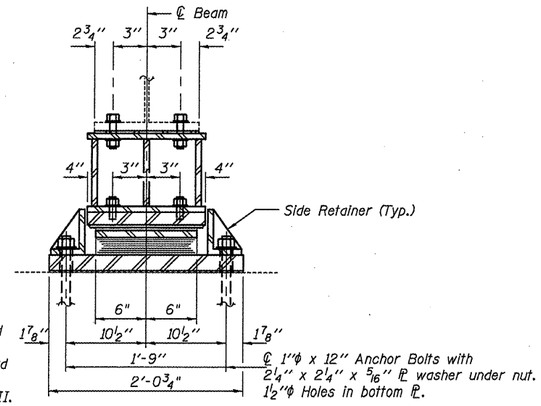

SECTION A-A

TYPE II TFE ELASTOMERIC EXP. BRG.

BEAM REACTIONS

RL	(K)	20.9
RR	(K)	39.2
Imp.	(K)	11.0
R (Total)	(K)	71.1

Notes:

Diaphragm removal and reinstallation may be required to facilitate drilling holes. Cost included with Furnishing and Erecting Structural Steel.

New steel extensions, shim plates and connection bolts are included with Furnishing and Erecting Structural Steel.

Prior to ordering any material, the Contractor shall verify in the field all bearing height and shim thickness dimensions.

Min. jack capacity = 35 Tons.

Anchor bolts shall be ASTM F1554 all-thread (or an Engineer-approved alternate material) of the grade(s) and diameter(s) specified. ASTM A307 Grade C anchor bolts may be used in lieu of ASTM F1554 Grade 36 (Fy=36ksi). The corresponding specified grade of AASHTO M314 anchor bolts may be used in lieu of ASTM F1554.

Anchor bolts at fixed bearings may be either cast in place or installed in holes drilled after the supported member is in place.

Anchor bolts for Type II bearings shall be placed in holes drilled through the bottom bearing plate after members are in place. Side retainers shall be placed after bolts are installed.

Drilled and set anchor bolts shall be installed according to Article 521.06 of the Standard Specifications.

Side retainers shall be included in the cost of Elastomeric Bearing Assembly, Type II.

The ⅛" PTFE sheet shall be bonded directly to the top steel plate with a two-component, medium viscosity epoxy resin, conforming to the requirements of the Federal Specification MMM-A-134, Type I. The bond agent shall be applied on the full area of the contact surfaces.

Bonding of ⅛" PTFE sheet during vulcanizing process will be permitted provided the process and method of adjusting assembly height is approved by the Engineer.

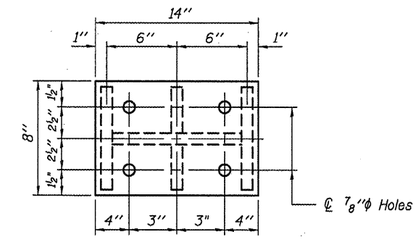

PLAN TOP AND BOTTOM PLATE

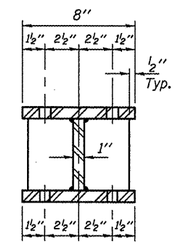

SECTION B-B

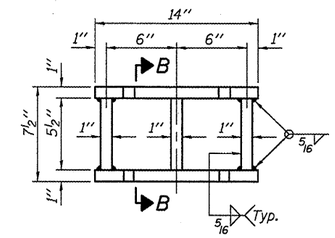

STEEL EXTENSION DETAIL

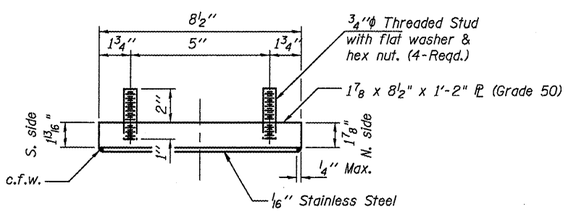

TOP BEARING ASSEMBLY

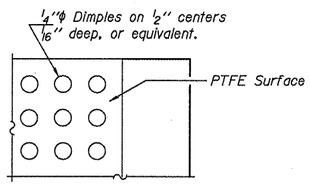

PLAN-PTFE SURFACE

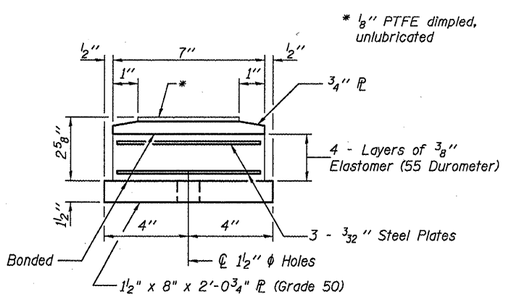

BOTTOM BEARING ASSEMBLY

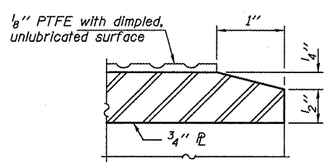

SECTION THRU PTFE

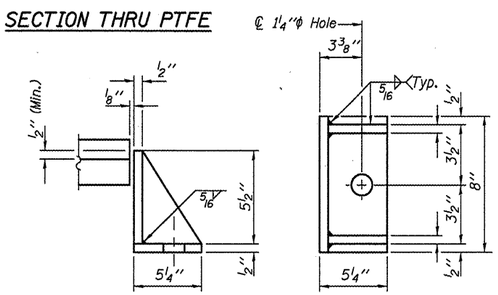

SIDE RETAINER

Equivalent rolled angle with stiffeners will be allowed in lieu of welded plates.

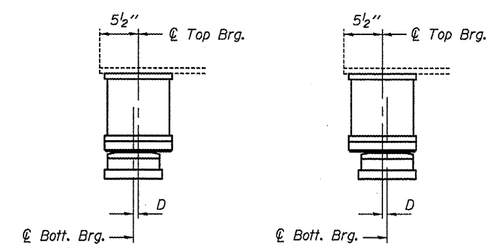

BELOW 50° F. (Move bott. brg. away from fixed brg.)

ABOVE 50° F. (Move bott. brg. toward fixed brg.)

SETTING ANCHOR BOLTS AT EXP. BRG.

D = ⅛" per each 100' of expansion for every 15° temp. change from the normal temp. of 50°F.

BILL OF MATERIAL

Item	Unit	Total
Elastomeric Bearing Assembly, Type II	Each	6
Jack and Remove Existing Bearings	Each	6
Furnishing and Erecting Structural Steel	Pound	700
Anchor Bolts 1"φ	Each	12

S. ABUTMENT BEARINGS
SN 079-0037

DESIGNED	J. Uehle
CHECKED	B. Williams
DRAWN	J. Uehle
CHECKED	B. Williams

November 6, 2009
EXAMINED — ENGINEER OF STRUCTURAL SERVICES
PASSED — ENGINEER OF BRIDGES AND STRUCTURES

TYII/REPS 12-03-2008

SHEET NO. 8	F.A.P. RTE.	SECTION	COUNTY	TOTAL SHEETS	SHEET NO.
SHEETS 9	312	73-VB-I	Randolph	21	19
			CONTRACT NO. 76C78		
	FED. ROAD DIST. NO. _	ILLINOIS	FED. AID PROJECT		

STATE OF ILLINOIS
DEPARTMENT OF TRANSPORTATION

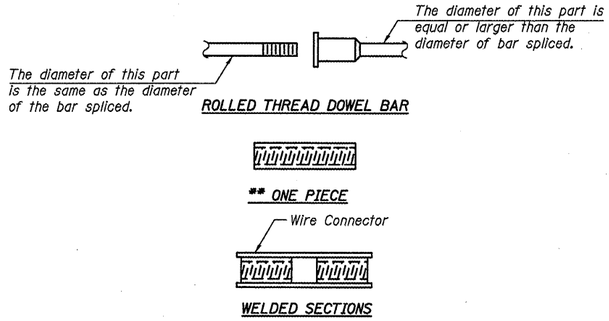

BAR SPLICER ASSEMBLY ALTERNATIVES

**Heavy Hex Nuts conforming to ASTM A 563, Grade C, D or DH may be used.

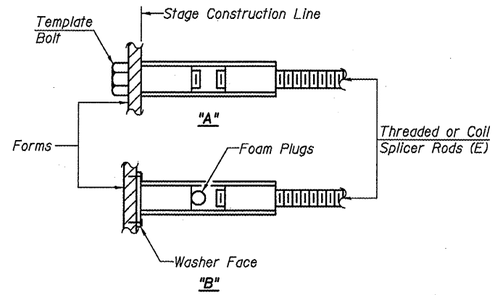

INSTALLATION AND SETTING METHODS

"A" : Set bar splicer assembly by means of a template bolt.
"B" : Set bar splicer assembly by nailing to wood forms or cementing to steel forms.
(E) : Indicates epoxy coating.

NOTES

Bar splicer assemblies shall be of an approved type and shall develop in tension at least 125 percent of the yield strength of the lapped reinforcement bars.

Splicer rods shall be of minimum 60 ksi yield strength, threaded or coiled full length.

All reinforcement bars shall be lapped and tied to the splicer rods or dowel bars.

Bar splicer assemblies shall be epoxy coated according to the requirements for reinforcement bars.

Other systems of similar design may be submitted to the Engineer for approval. Approval shall be based on certified test results from an approved testing laboratory that the proposed bar splicer assembly satisfies the following requirements:

① Minimum Capacity (Tension in kips) = $1.25 \times f_y \times A_t$

② Minimum *Pull-out Strength (Tension in kips) = $0.66 \times f_y \times A_t$

Where f_y = Yield strength of lapped reinforcement bars in ksi.
A_t = Tensile stress area of lapped reinforcement bars.
* = 28 day concrete

BAR SPLICER ASSEMBLIES			
Bar Size to be Spliced	Splicer Rod or Dowel Bar Length	Strength Requirements	
		Min. Capacity kips - tension	Min. Pull-Out Strength kips - tension
#4	1'-8"	14.7	7.9
#5	2'-2"	23.0	12.3
#6	2'-7"	33.1	17.4
#7	3'-5"	45.1	23.8
#8	4'-6"	58.9	31.3
#9	5'-9"	75.0	39.6
#10	7'-3"	95.0	50.3
#11	9'-0"	117.4	61.8

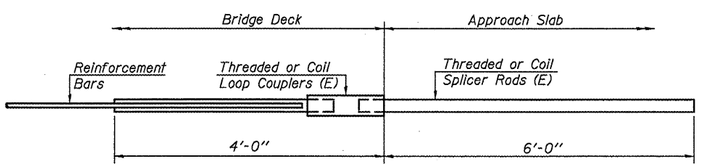

FOR INTEGRAL OR SEMI-INTEGRAL ABUTMENTS

Bar Splicer for #5 bar
Min. Capacity = 23.0 kips - tension
Min. Pull-out Strength = 12.3 kips - tension
No. Required =

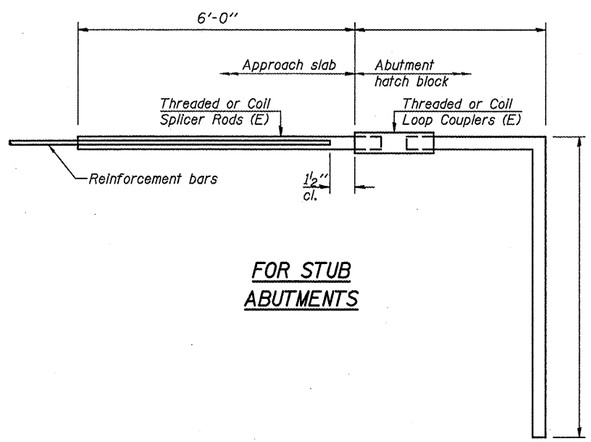

FOR STUB ABUTMENTS

Bar Splicer for #5 bar
Min. Capacity = 23.0 kips - tension
Min. Pull-out Strength = 12.3 kips - tension
No. Required =

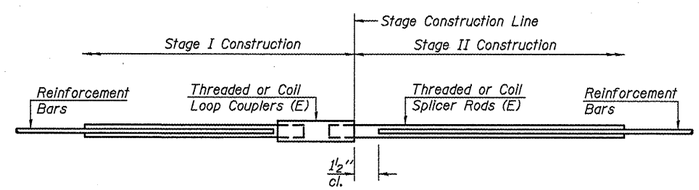

STANDARD

Bar Size	No. Assemblies Required	Location
#5	24	Ends of Deck

DESIGNED	J. Uehle
CHECKED	B. Williams
DRAWN	J. Uehle
CHECKED	B. Williams

November 6, 2009
EXAMINED — ENGINEER OF STRUCTURAL SERVICES
PASSED — ENGINEER OF BRIDGES AND STRUCTURES

BSD-1 10-1-08

BAR SPLICER ASSEMBLY DETAILS
SN 079-0037

SHEET NO. 9	F.A.P. RTE.	SECTION	COUNTY	TOTAL SHEETS	SHEET NO.
SHEETS 9	312	73-VB-I	Randolph	21	20
			CONTRACT NO. 76C78		
	FED. ROAD DIST. NO. _	ILLINOIS	FED. AID PROJECT		

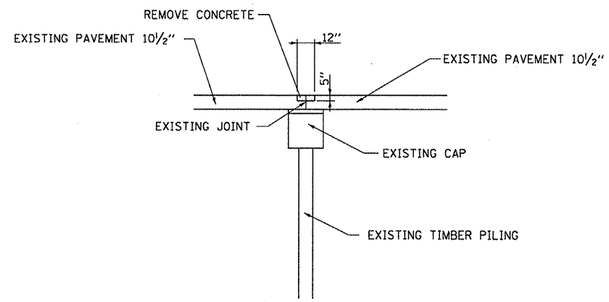

JOINT DETAIL
STA. 783+70.11

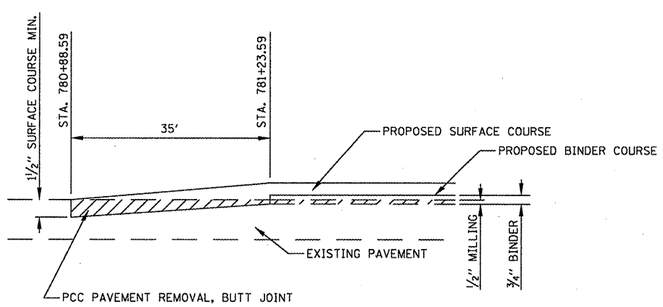

BUTT JOINT DETAIL
BEGINNING OF PROJECT

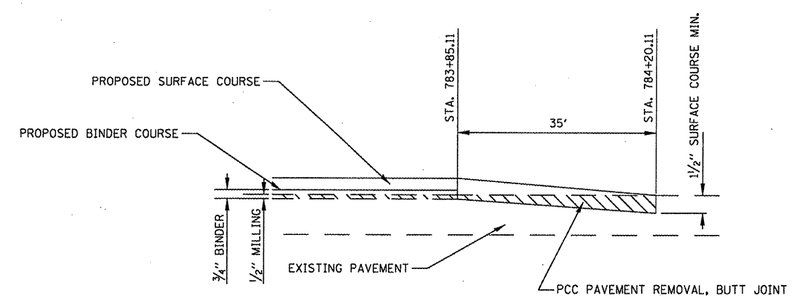

BUTT JOINT DETAIL
END OF PROJECT

FILE NAME = $FILEL$	USER NAME = $USER$	DESIGNED -	REVISED -	STATE OF ILLINOIS DEPARTMENT OF TRANSPORTATION	DETAILS	F.A.P RTE.	SECTION	COUNTY	TOTAL SHEETS	SHEET NO.
		DRAWN -	REVISED -			312	73-VB-1	RANDOLPH	21	21
	PLOT SCALE = $SCALE$	CHECKED -	REVISED -					CONTRACT NO. 76C78		
	PLOT DATE = $DATE$	DATE -	REVISED -		SCALE: SHEET NO. 1 OF 1 SHEETS STA. TO STA.	FED. ROAD DIST. NO.	ILLINOIS	FED. AID PROJECT		

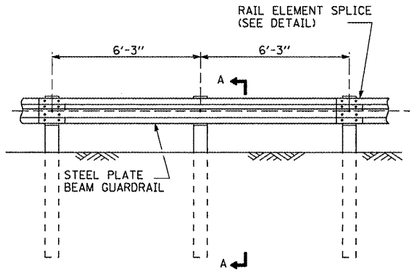

ELEVATION

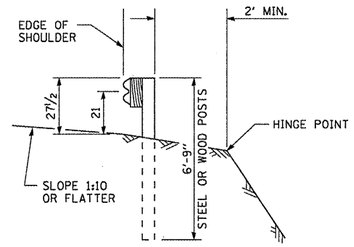

SECTION A-A

TYPE A

GENERAL NOTES

ALL SLOPE RATIOS ARE EXPRESSED AS UNITS OF VERTICAL DISPLACEMENT TO UNITS OF HORIZONTAL DISPLACEMENT (V:H).

ALL DIMENSIONS ARE IN INCHES UNLESS OTHERWISE SHOWN.

THE EXISTING STEEL POSTS MAY BE DRILLED TO MATCH THE BOLT PATTERN SHOWN HEREIN FOR THE WOOD BLOCK-OUT, OR A NEW STEEL POST SHALL BE PROVIDED.

THIS DETAIL IS APPLICABLE TO THE GUARDRAIL SYSTEM USED PRIOR TO JANUARY 1, 2007. FOR DETAILS ON THE MIDWEST GUARDRAIL SYSTEM, SEE STANDARD 630001.

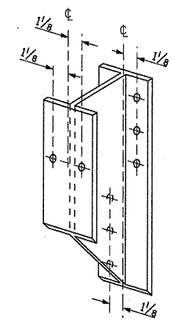

STEEL BLOCK-OUT DETAIL

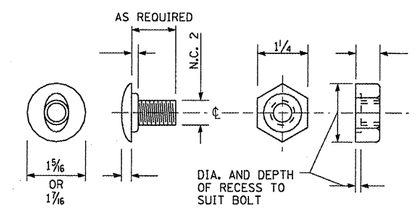

POST OR SPLICE BOLT & NUT

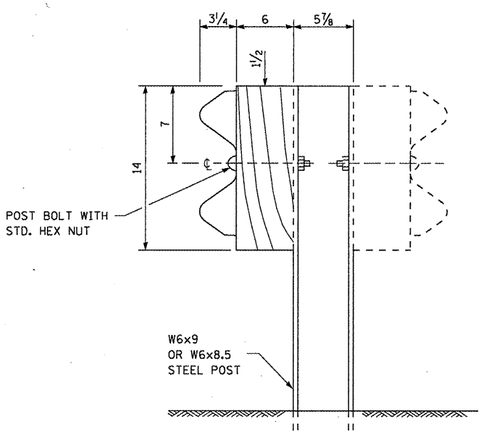

STEEL POST CONSTRUCTION

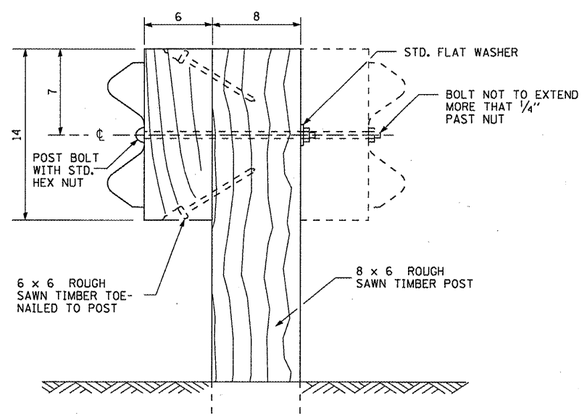

WOOD POST CONSTRUCTION

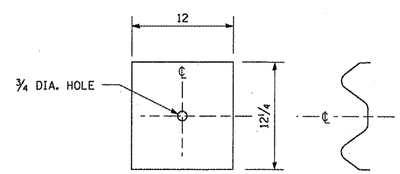

NOTE:

PLATE A SHALL BE PLACED BETWEEN RAIL ELEMENT AND BLOCK-OUT AT NON-SPLICE MOUNTING POINTS ONLY WHEN STEEL BLOCK-OUTS ARE USED.

PLATE A

FILE NAME = $FILEL$	USER NAME = $USER$	DESIGNED -	REVISED -	STATE OF ILLINOIS DEPARTMENT OF TRANSPORTATION	STEEL PLATE BEAM GUARDRAIL, TYPE A DETAIL	F.A.P. RTE.	SECTION	COUNTY	TOTAL SHEETS / SHEET NO.
		DRAWN -	REVISED -			312	73-VB-I	RANDOLPH	21 / 21A
	PLOT SCALE = $SCALE$	CHECKED -	REVISED -					CONTRACT NO. 76C78	
	PLOT DATE = $DATE$	DATE -	REVISED -		SCALE: SHEET NO. OF SHEETS STA. TO STA.	FED. ROAD DIST. NO.	ILLINOIS	FED. AID PROJECT	

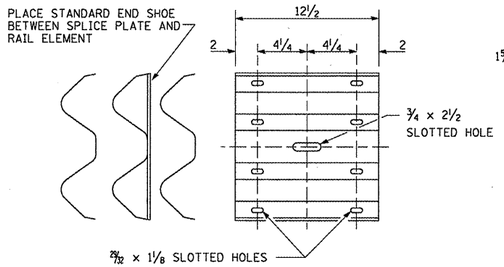

SPLICE PLATE

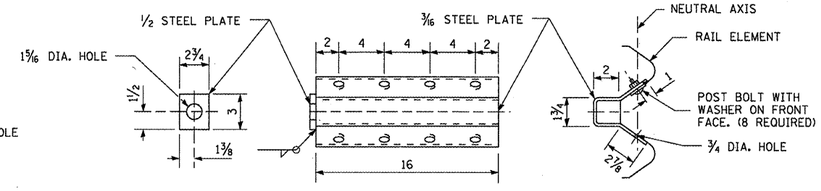

NOTE:

ANCHOR PLATE T SHALL BE USED TO ATTACH CABLE ASSEMBLY TO GUARDRAIL WHEN REQUIRED ON TRAFFIC BARRIER TERMINALS.

ANCHOR PLATE T DETAILS

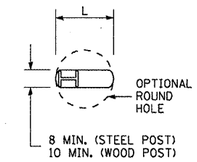

PLAN

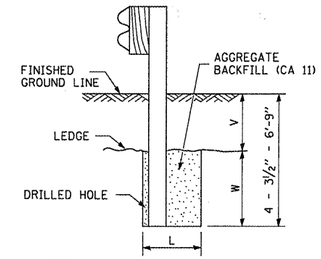

NOTE:
LEDGE LINE IS TOP OF ROCK LEDGE OR HARD SLAG FILL.

ELEVATION

FOOTING FOR POST WHEN IMPERVIOUS MATERIAL IS ENCOUNTERED

V	W	L	
		STEEL POST	WOOD POST
0 - 18	24	21	23
>18 - 41.5	12	8	10
>41.5 - 53.5	12 - 0	8	10

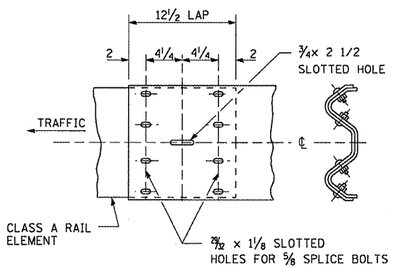

RAIL ELEMENT SPLICE

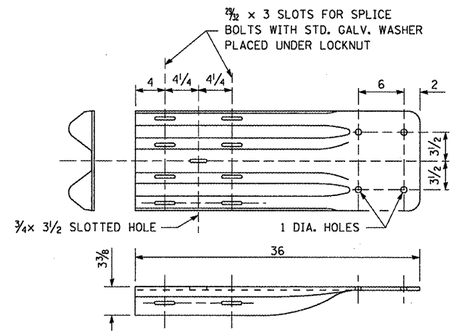

NOTE:

WHEN END SHOE IS ATTACHED TO A BRIDGE PARAPET WHICH HAS AN EXPANSION JOINT, THE BOLTS SHALL BE PROVIDED WITH A LOCKNUT OR DOUBLE NUT AND SHALL BE TIGHTENED ONLY TO A POINT THAT WILL ALLOW GUARDRAIL MOVEMENT.

THE STANDARD END SHOE SHALL BE ATTACHED TO THE CONCRETE WITH PRE-DRILLED OR SELF-DRILLING ANCHOR BOLTS. THE ANCHOR CONE SHALL BE SET FLUSH WITH THE SURFACE OF THE CONCRETE.

EXTERNALLY THREADED STUDS PROTRUDING FROM THE SURFACE OF THE CONCRETE WILL NOT BE PERMITTED.

END SHOE

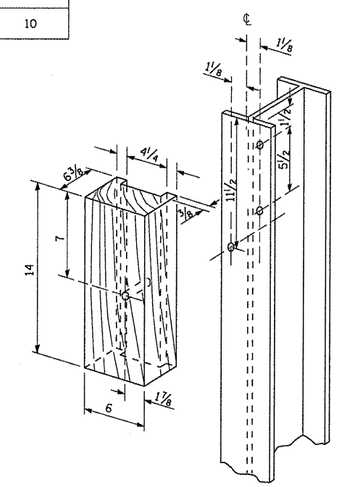

WOOD BLOCK-OUT AND STEEL POST DETAILS

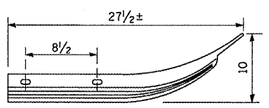

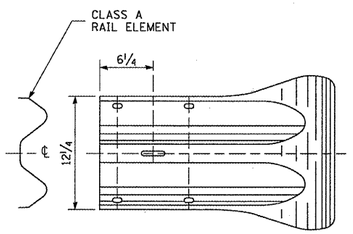

END SECTION

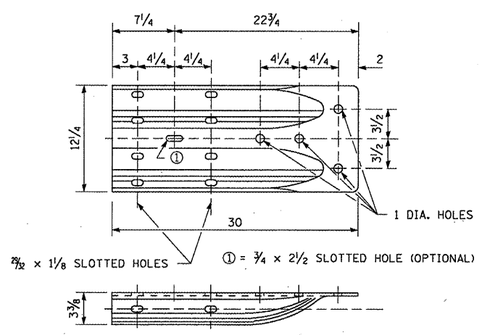

ALTERNATE END SHOE

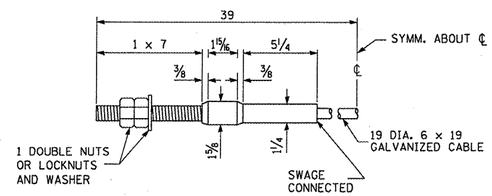

CABLE ASSEMBLY

40,000 LBS. MIN. BREAKING STRENGTH
TIGHTEN TO TAUT TENSION.

FILE NAME = $FILEL$	USER NAME = $USER$	DESIGNED -	REVISED -	STATE OF ILLINOIS DEPARTMENT OF TRANSPORTATION	STEEL PLATE BEAM GUARDRAIL, TYPE A DETAIL	F.A.P. RTE.	SECTION	COUNTY	TOTAL SHEETS / SHEET NO.
		DRAWN -	REVISED -			312	73-VB-1	RANDOLPH	21 / 21B
	PLOT SCALE = $SCALE$	CHECKED -	REVISED -					CONTRACT NO. 76C78	
	PLOT DATE = $DATE$	DATE -	REVISED -		SCALE: SHEET NO. OF SHEETS STA. TO STA.	FED. ROAD DIST. NO.	ILLINOIS	FED. AID PROJECT	