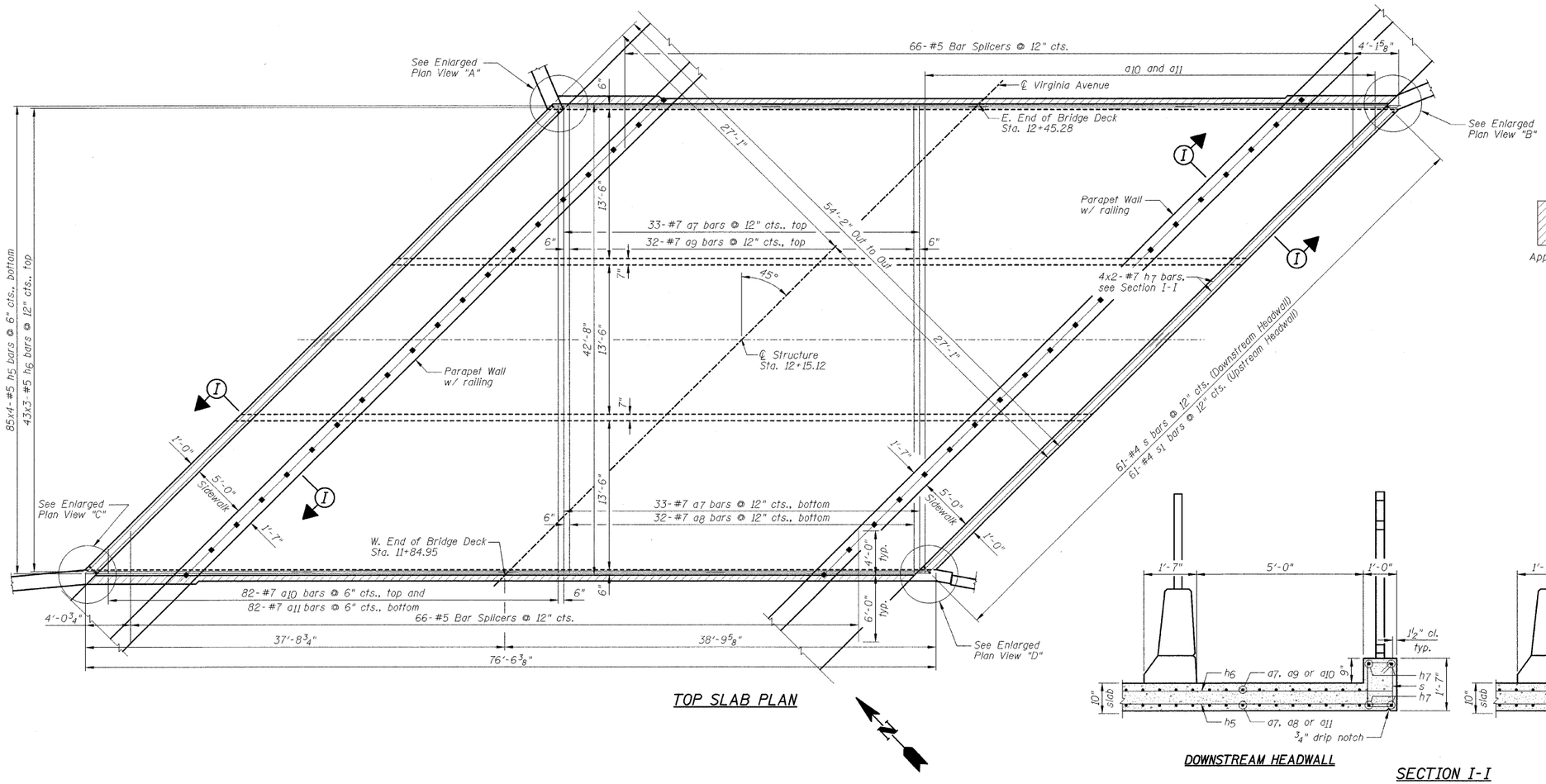


TOP SLAB PLAN




DOWNSTREAM HEADWALL

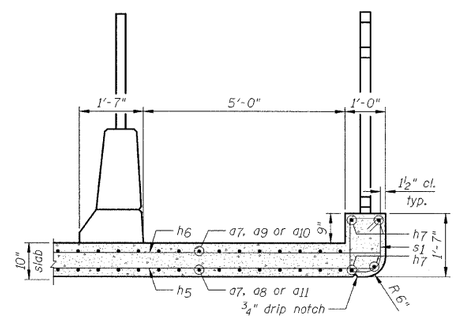


UPSTREAM HEADWALL

SECTION I-I

Pedestrian Railing, Bicycle Railing and Parapet Reinforcement not shown for clarity.

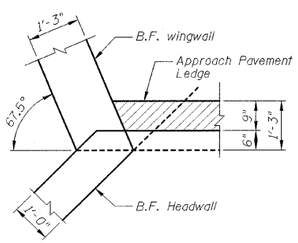


ENLARGED PLAN VIEW "A"

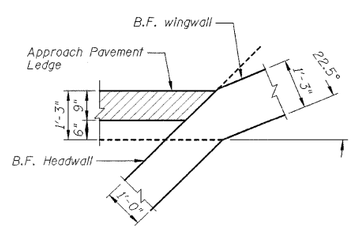


ENLARGED PLAN VIEW "B"

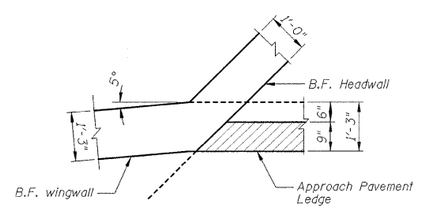


ENLARGED PLAN VIEW "C"

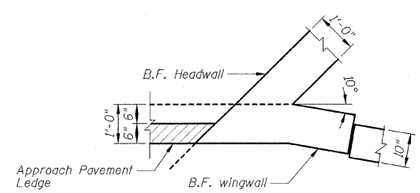


ENLARGED PLAN VIEW "D"

## NOTES:

1.) Order a10 and a11 bars full length, cut according to Bar Cutting Diagram on Sheet C2. Use remainder of bars in opposite end.
2.) For bar lap lengths, see the General Notes on Sheet C2.
3.) See Sheet C2 for Bill of Materials.

| | | | | | | | |
|---|---|---|---|---|---|---|---|
| DESIGNED - SDH | REVISED - | TOWN OF NORMAL | TOP SLAB REINFORCEMENT | VIRGINIA AVENUE OVER SUGAR CREEK SECTION 04-00226-00-BR MCLEAN COUNTY | F.A.U. | SECTION | COUNTY | TOTAL SHEETS | SHEET NO. |
| DRAWN - JWK | REVISED - | | | | 6366 | 04-00226-00-BR | MCLEAN | 52 | 27 |
| CHECKED - MSW | REVISED - | | | | S.N. 057-7834 | | CONTRACT NO. 91416 | | |
| DATE - 07/22/2009 | REVISED - | | SCALE: SHEET NO. C6 OF 23 SHEETS STA. TO STA. | | FED. ROAD DIST. NO. | ILLINOIS | FED. AID PROJECT | | |