ROUTE NO.	SECTION	COUNTY	TOTAL SHEETS	SHEET NO.
F.A.S. 548	05-00196-00-BR	MACON	17	15
FED. ROAD DIST. NO.		ILLINOIS	PROJECT: ARA-0548(103)	

CONTRACT NO. 95599

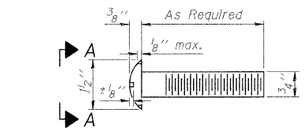

DETAIL OF 3/4" ϕ ROUND HEAD BOLT

With Slot

Without Slot or Recess

VIEW A-A

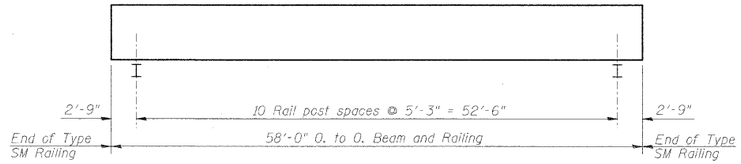

PLAN VIEW - EXTERIOR BEAM

(Showing Rail Post Spacing)

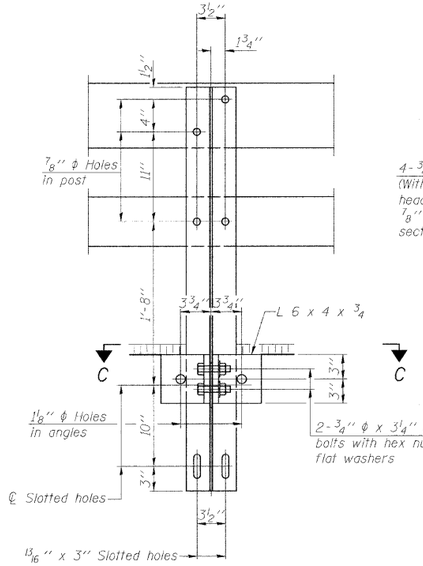

SECTION B-B

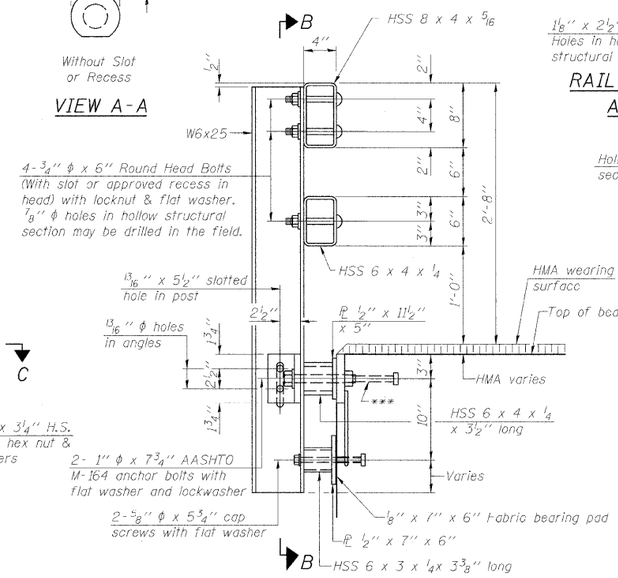

SECTION AT RAIL POST

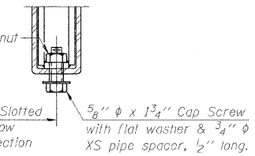

RAIL SPLICE CONNECTION AT EXPANSION JT.

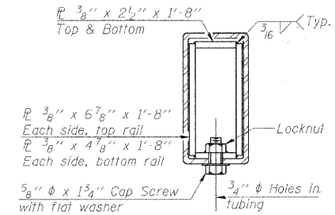

SECTION AT RAIL SPLICE

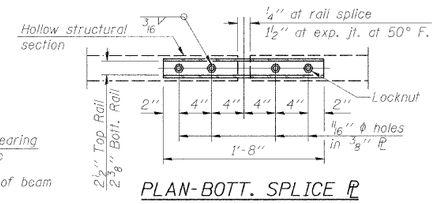

PLAN-BOTT. SPLICE PL TYPICAL

℄ -5/8" reduced base welded studs. Provide 4 - 3/8" washers and self-locking nuts or nuts and jam nuts for guardrail connection shown on Std. 631032

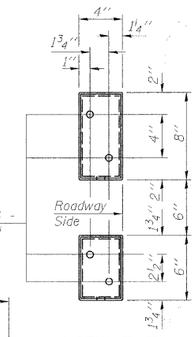

VIEW E-E

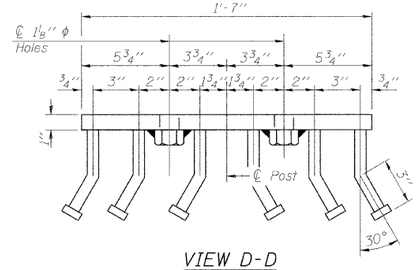

VIEW D-D

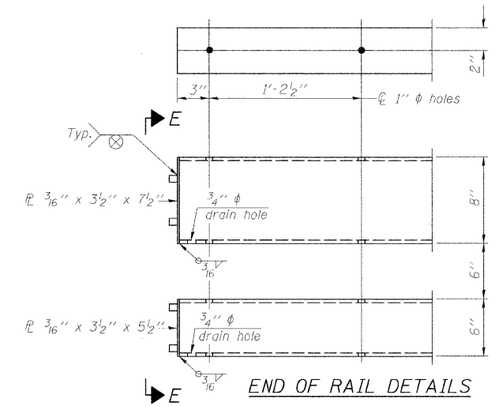

END OF RAIL DETAILS

Notes:

All field drilled holes shall be coated with an approved zinc rich paint before erection.

For multi-span bridges, sufficient 1/4" x 6" x 1'-2" galvanized steel shims shall be provided to align rail between adjacent spans. Cost included with Steel Railing, Type SM.

All steel rail members shall be galvanized according to Article 509.05 of the Standard Specifications.

*** The studs of the anchor devices shall be placed below the top reinforcement bars and the outermost longitudinal reinforcement bar shall be placed directly above the studs of the rail post anchor device.

** Whenever the lower insert assemblies interfere with strand locations, the #3 bars shall be cut and adjusted in order to allow raising or lowering of the lower inserts. Maximum adjustment not to exceed 1/2".

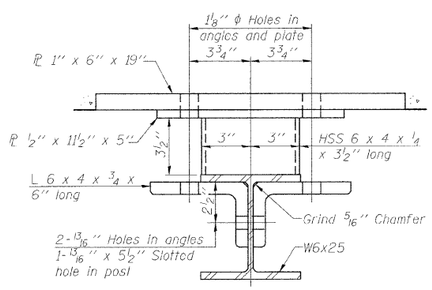

SECTION C-C

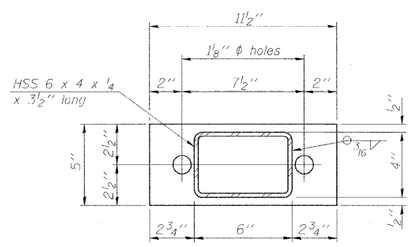

PL 1/2" x 11 1/2" x 5"

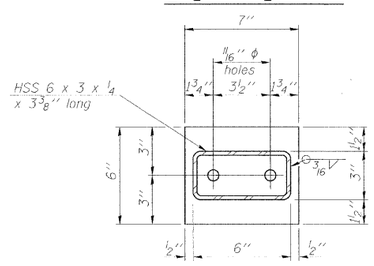

PL 1/2" x 7" x 6"

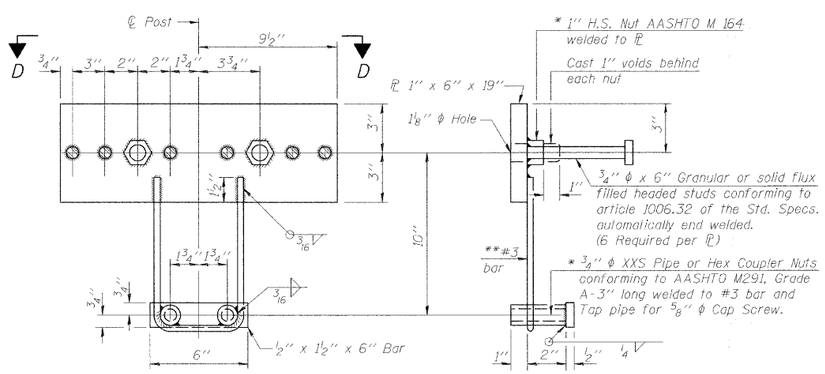

ANCHOR DEVICE

*Threaded areas shall be plugged or blocked off during casting of beam. Galvanized after fabrication.

BILL OF MATERIAL

Item	Unit	Quantity
Steel Railing, Type SM	Foot	116

STEEL RAILING, TYPE SM WITH HOT-MIX ASPHALT WEARING SURFACE STRUCTURE NO. 058-3378

STEEL RAILING

Date	Designed MJP	F.A.S. 548 OVER LAKE FORK CREEK SECTION 05-00196-00-BR MACON COUNTY STA. 15+00.00 PROP. STR. NO. 058-3378	Sheet No. 4 of 6
Revisions	Drawn BKN		
	Checked KWB		
	Approved KWB		
Prepared by: URS	345 East Ash Avenue Decatur, Il. 62526		URS Job No. 36431681