CONTRACT NO. 95602

RTE.	SECTION	COUNTY	TOTAL SHEETS	SHEET NO.
*	00-00220-06-RS	SHELBY	19	9

* FAS 713

PROPOSED TYPICAL COMMERCIAL ENTRANCE

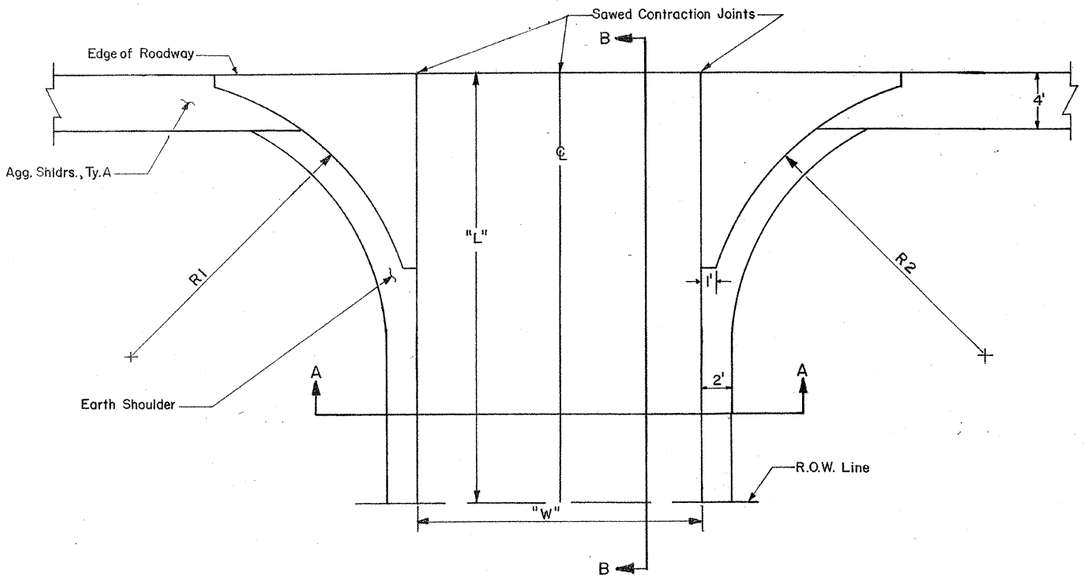

PLAN

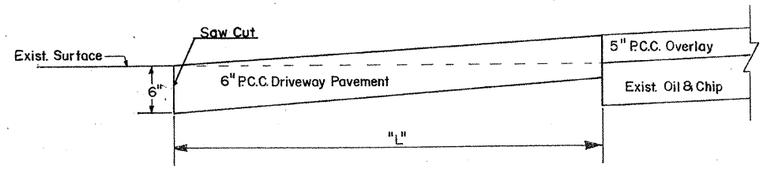

SECTION B–B

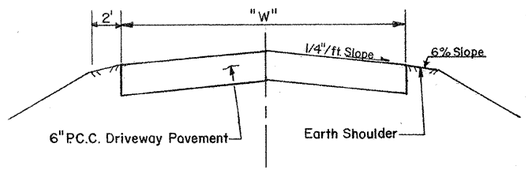

SECTION A–A

COMMERCIAL ENTRANCE SCHEDULE

STATION	O/S	TYPE	LOCATION	P.C.C. PAVEMENT 6" DEPTH (SY)	AGG. SHOULDER (TON)	WIDTH "W"	LENGTH "L"	RADIUS "R1"	RADIUS "R2"
38+58	LT	CE	POST OFFICE	45	2.0	18'	20'	10'	10'
40+41	LT	CE	FIRE HOUSE	70	3.0	42'	15'	15'	15'
TOTALS=				115.0	5.0				

SHELBY COUNTY
P.C.C. OVERLAY
DETAILS