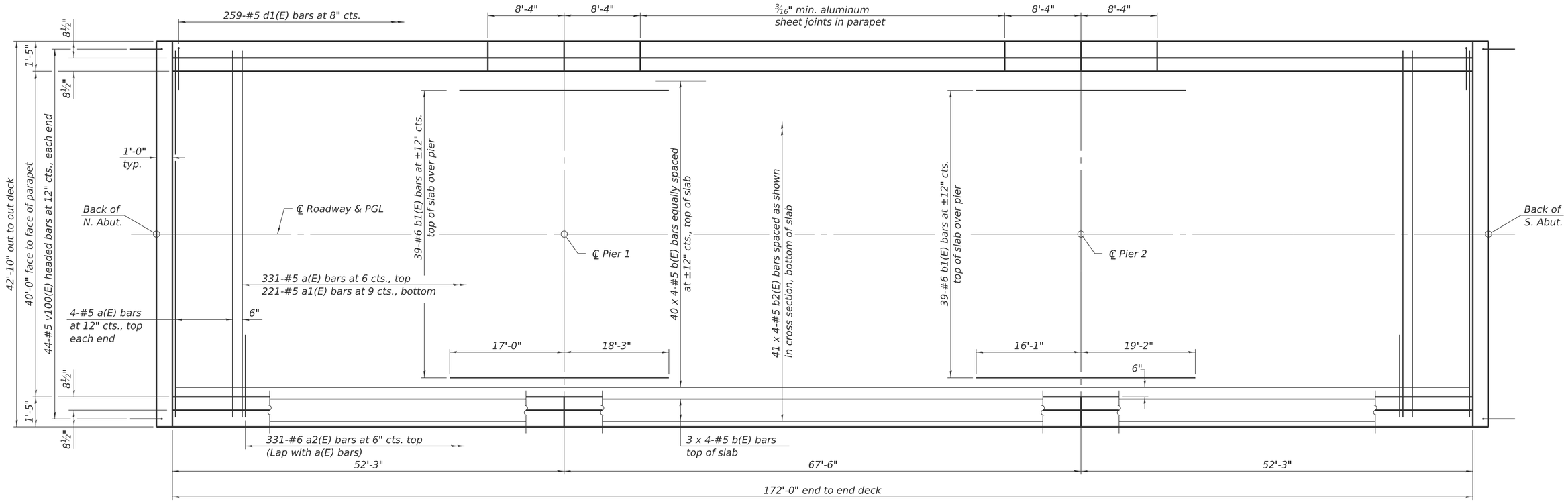

PLAN

MINIMUM BAR LAP

#5 bar = 3'-10"

#6 BAR = 4'-10"

Notes:
See sheet 17 of 39 for superstructure details and Bill of Material.
Bars indicated thus 20 x 3-#5 etc. indicates 20 lines of bars with 3 lengths per line.

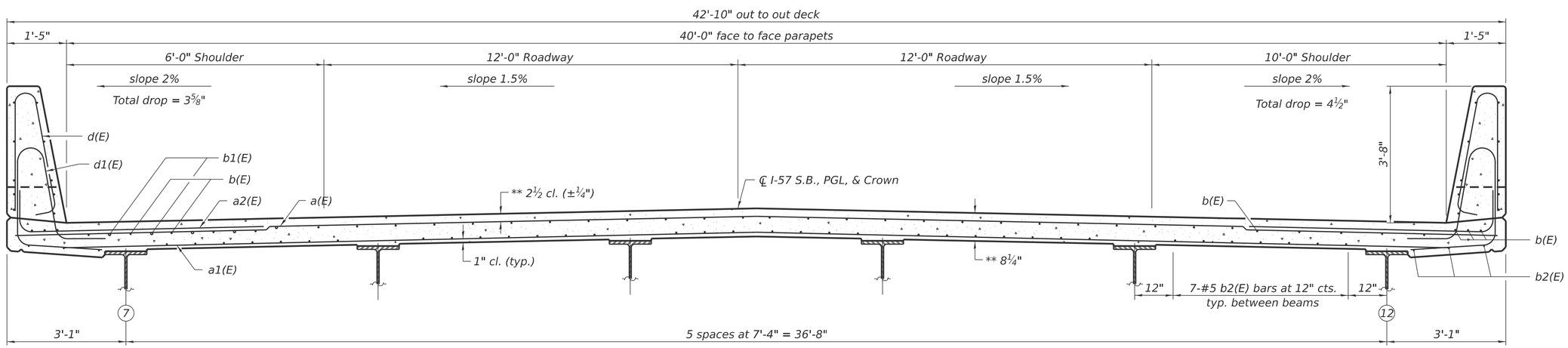

NEAR PIER

** Prior to grinding

NEAR MIDSPAN

CROSS SECTION
(Looking South)

SI-SB-2-0

4-4-2025

MODEL: Default
FILE NAME: G:\Users\6\66501-05-IDOT-I-57 Structure Projects-TP&W RR and 2nd St\Survey D366M80\SN\038-0005_0006\Consultant_Data\Chamlin_2025\Design\0380005_0006-66M80-016-SUPERSTR_0006.dgn

Chamlin & Associates

USER NAME = CHAMLIN	DESIGNED - PDF	REVISED -	
	DRAWN - LAG	REVISED -	
	CHECKED - JLS	REVISED -	
PLOT DATE = 2/27/2026	DATE - 04/21/2025	REVISED -	

STATE OF ILLINOIS
DEPARTMENT OF TRANSPORTATION

SUPERSTRUCTURE
STRUCTURE NO. 038-0006 (SB)

SCALE: SHEET 16 OF 39 SHEETS STA. TO STA.

F.A.I. RTE.	SECTION	COUNTY	TOTAL SHEETS	SHEET NO.
57	(38-4,38-5)BR,D,CR	IROQUOIS	437	201
		CONTRACT NO. 66M80		
		ILLINOIS	FED. AID PROJECT	

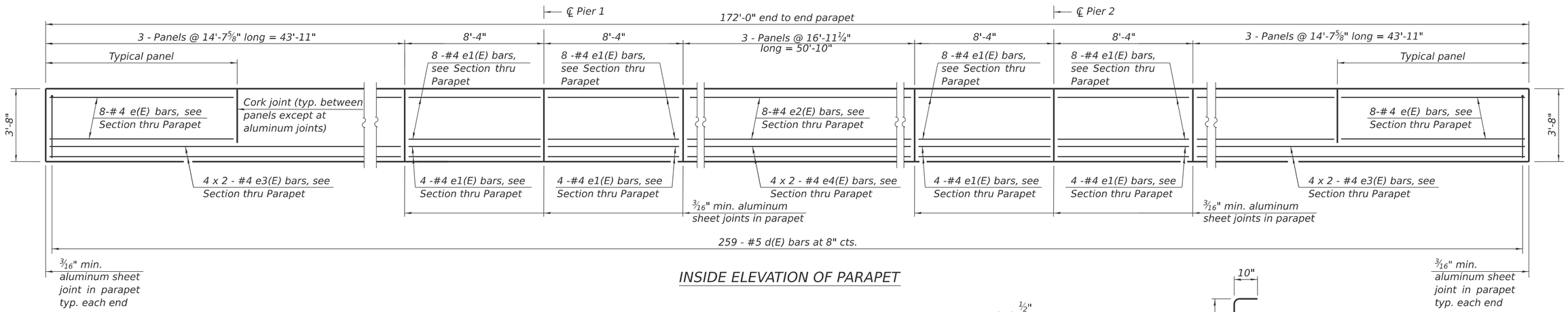

INSIDE ELEVATION OF PARAPET

MINIMUM BAR LAP

#4 bar = 2'-5"

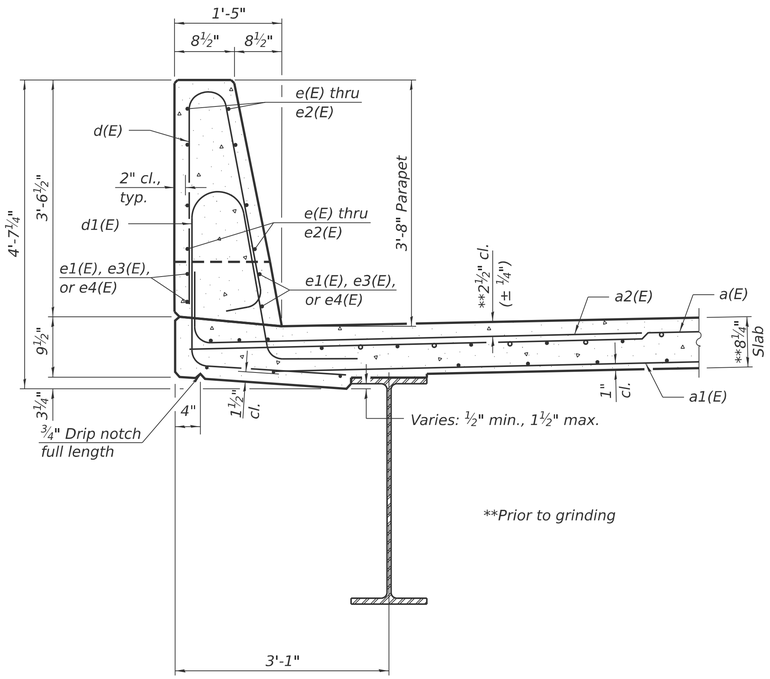

**Prior to grinding

SECTION THRU PARAPET

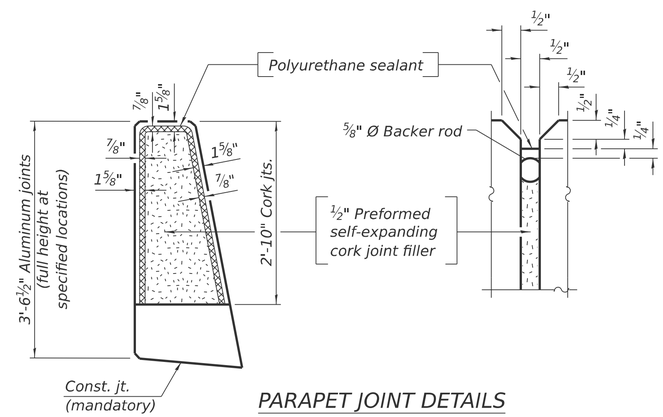

PARAPET JOINT DETAILS

Notes:

The 3/16" min. aluminum sheet shall be ASTM B 209 alloy 3003-H14 and coated with 5 mils of either bitumen paint or epoxy paint to minimize reaction with wet concrete. Cost included with Concrete Superstructure.

The polyurethane sealant shall be according to Article 1050.04 of the Std. Spec. and the color shall be gray.

Bar terminators, paid for separately. See Total Bill of Material.

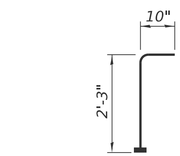

BAR v100(E)

(Headed. 88 - #5 Bar terminators)

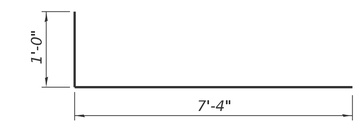

BAR a2(E)

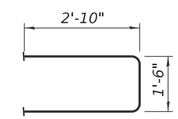

BAR s10(E)

(Headed 164-#5 Bar terminals

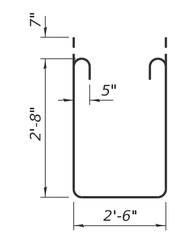

BAR s11(E)

SUPERSTRUCTURE BILL OF MATERIAL

Bar	No.	Size	Length	Shape
a(E)	339	#5	42'-6"	
a1(E)	221	#5	41'-6"	
a2(E)	662	#6	8'-4"	
b(E)	184	#5	45'-10"	
b1(E)	78	#6	32'-5"	
b2(E)	164	#5	45'-10"	
d(E)	518	#5	7'-0"	
d1(E)	518	#5	8'-5"	
e(E)	96	#4	14'-4"	
e1(E)	96	#4	8'-0"	
e2(E)	48	#4	16'-8"	
e3(E)	32	#4	23'-0"	
e4(E)	16	#4	26'-6"	
m10(E)	10	#6	42'-6"	
m11(E)	20	#6	7'-0"	
m12(E)	20	#6	7'-0"	
m14(E)	4	#4	42'-6"	
m15(E)	8	#6	2'-9"	
m16(E)	8	#6	2'-9"	
s10(E)	82	#5	7'-2"	
s11(E)	82	#5	9'-0"	
u10(E)	82	#4	3'-8"	
v100(E)	88	#5	3'-1"	
Reinforcement Bars, Epoxy Coated			Lbs.	67,190
Concrete Superstructure			Cu. Yds.	275.9

Bars indicated thus 1 x 2-#4 etc. indicates 1 line of bars with 2 lengths per line.

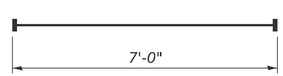

BAR m11(E)

(Headed 40 - #6 Bar terminators)

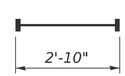

BAR m15(E)

(Headed 16 - #6 Bar terminators)

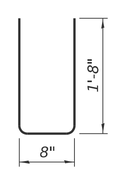

BAR u10(E)

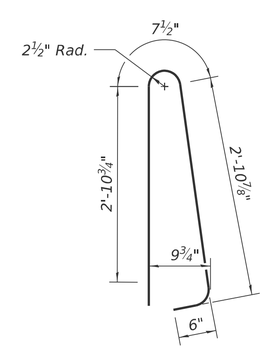

BAR d(E)

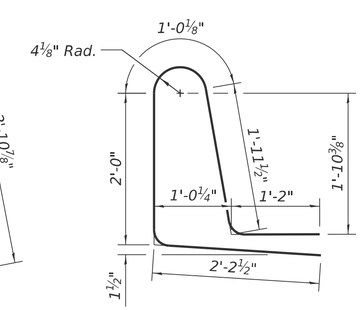

BAR d1(E)

SDI-SB-2 4-4-2025

MODEL: Default
FILE NAME: G:\Users\6\66501-05-IDOT-I-57 Structure Projects-TP&W RR and 2nd St\Survey D366M80\SN\38-0005_0006\Consultant_Data\Chamlin_2025\Design\0380005_0006-66M80-017-SUPERSTR_DETS_0006.dgn

Chamlin & Associates

USER NAME = CHAMLIN	DESIGNED - PDF	REVISED -	
	DRAWN - LAG	REVISED -	
	CHECKED - JLS	REVISED -	
PLOT DATE = 2/27/2026	DATE - 04/21/2025	REVISED -	

STATE OF ILLINOIS
DEPARTMENT OF TRANSPORTATION

SUPERSTRUCTURE DETAILS
STRUCTURE NO. 038-0006 (SB)

SCALE: SHEET 17 OF 39 SHEETS STA. TO STA.

F.A.I. RTE.	SECTION	COUNTY	TOTAL SHEETS	SHEET NO.
57	(38-4,38-5)BR,D,CR	IROQUOIS	437	202
		CONTRACT NO. 66M80		
		ILLINOIS	FED. AID PROJECT	

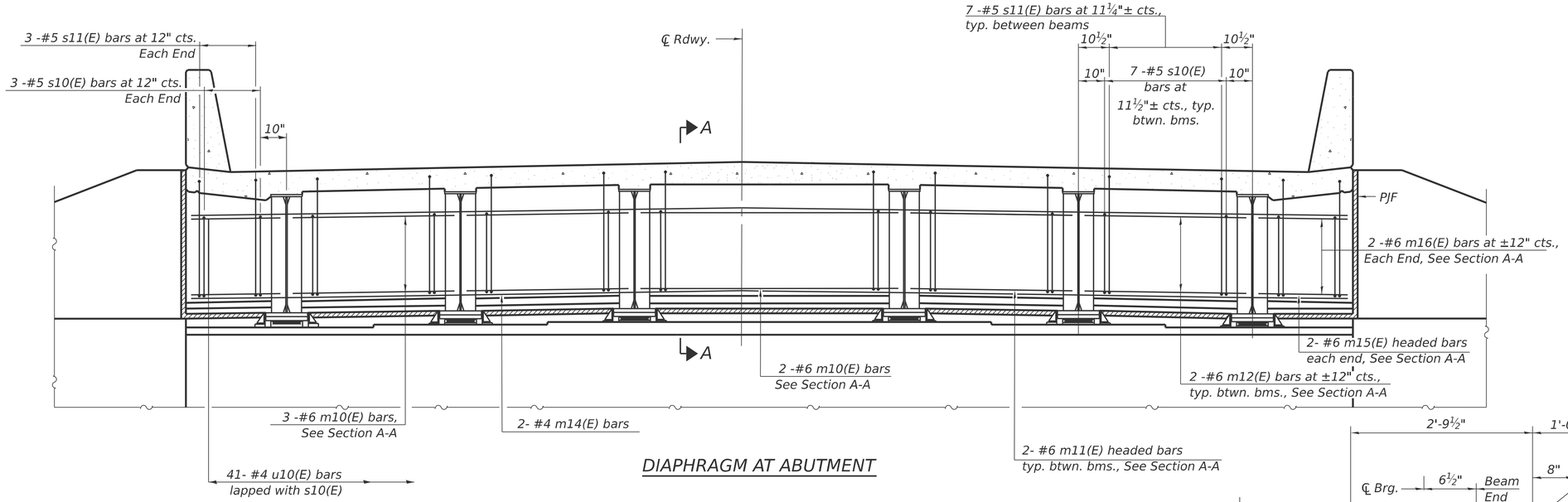

DIAPHRAGM AT ABUTMENT

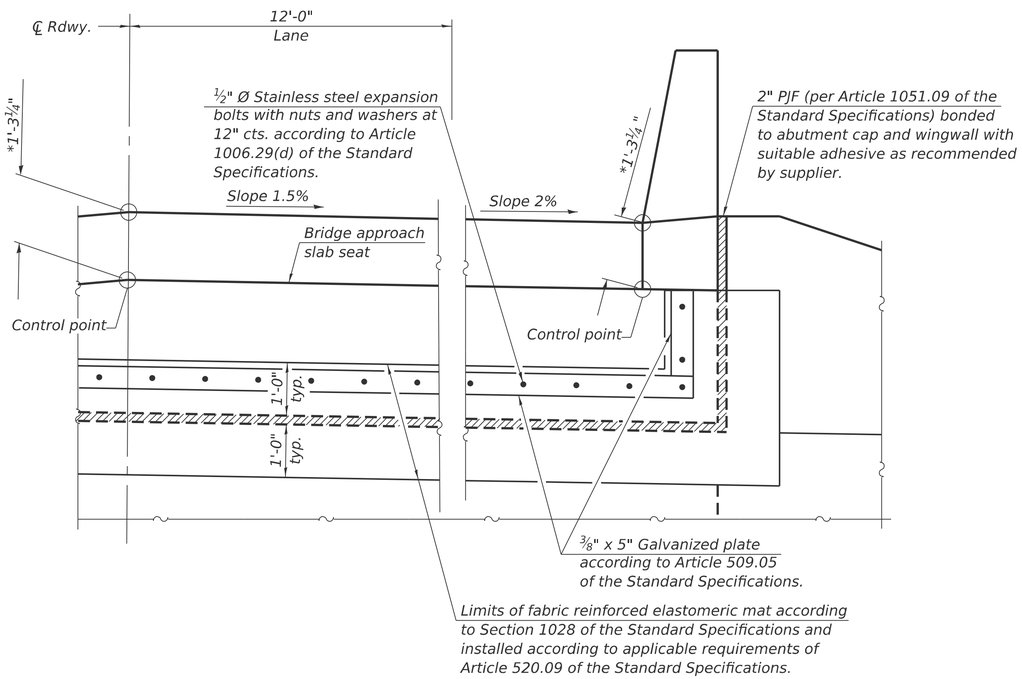

ELEVATION

(Looking at back of abutment)

*Prior to grinding

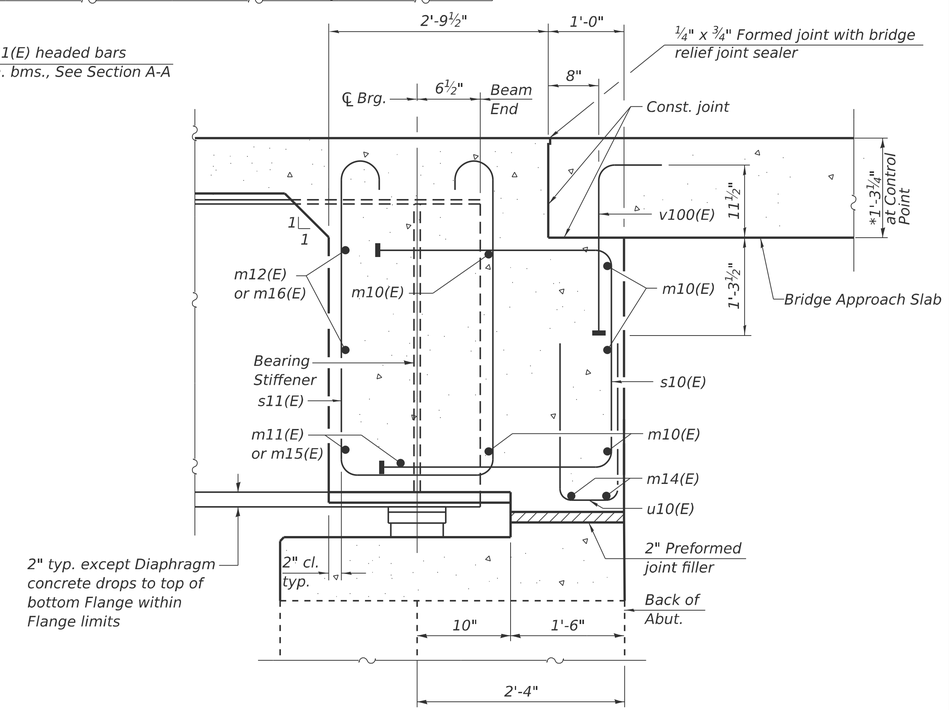

SECTION A-A

*Prior to grinding

Notes:

See sheet 17 of 39 for superstructure details and Bill of Material.

See sheet 2 of 39 for further details of PJF and fabric reinforced elastomeric mat.

The approach slab seat shall have a constant slope determined from the control points shown.

Cost of fabric reinforced elastomeric mat, galvanized plate, stainless steel expansion bolts with nuts and washers and installation are included in the cost of Concrete Superstructure.

DIA-SB-0 4-4-2025

MODEL: Default
FILE NAME: G:\Users\0\66501-05-IDOT-I-57 Structure Projects-TP&W RR and 2nd St\Survey D366M80\SN\038-0005_0006\Consultant_Data\Chamlin_2025\Design\0380005_0006-66M80-018-DIAPHRAGM_DETS_0006.dgn

Chamlin & Associates

USER NAME = CHAMLIN	DESIGNED - PDF	REVISED -	
	DRAWN - LAG	REVISED -	
	CHECKED - JLS	REVISED -	
PLOT DATE = 2/27/2026	DATE - 04/21/2025	REVISED -	

STATE OF ILLINOIS
DEPARTMENT OF TRANSPORTATION

DIAPHRAGM DETAILS
STRUCTURE NO. 038-0006 (SB)

SCALE: SHEET 18 OF 39 SHEETS STA. TO STA.

F.A.I. RTE.	SECTION	COUNTY	TOTAL SHEETS	SHEET NO.
57	(38-4,38-5)BR,D,CR	IROQUOIS	437	203
		CONTRACT NO. 66M80		
		ILLINOIS	FED. AID PROJECT	

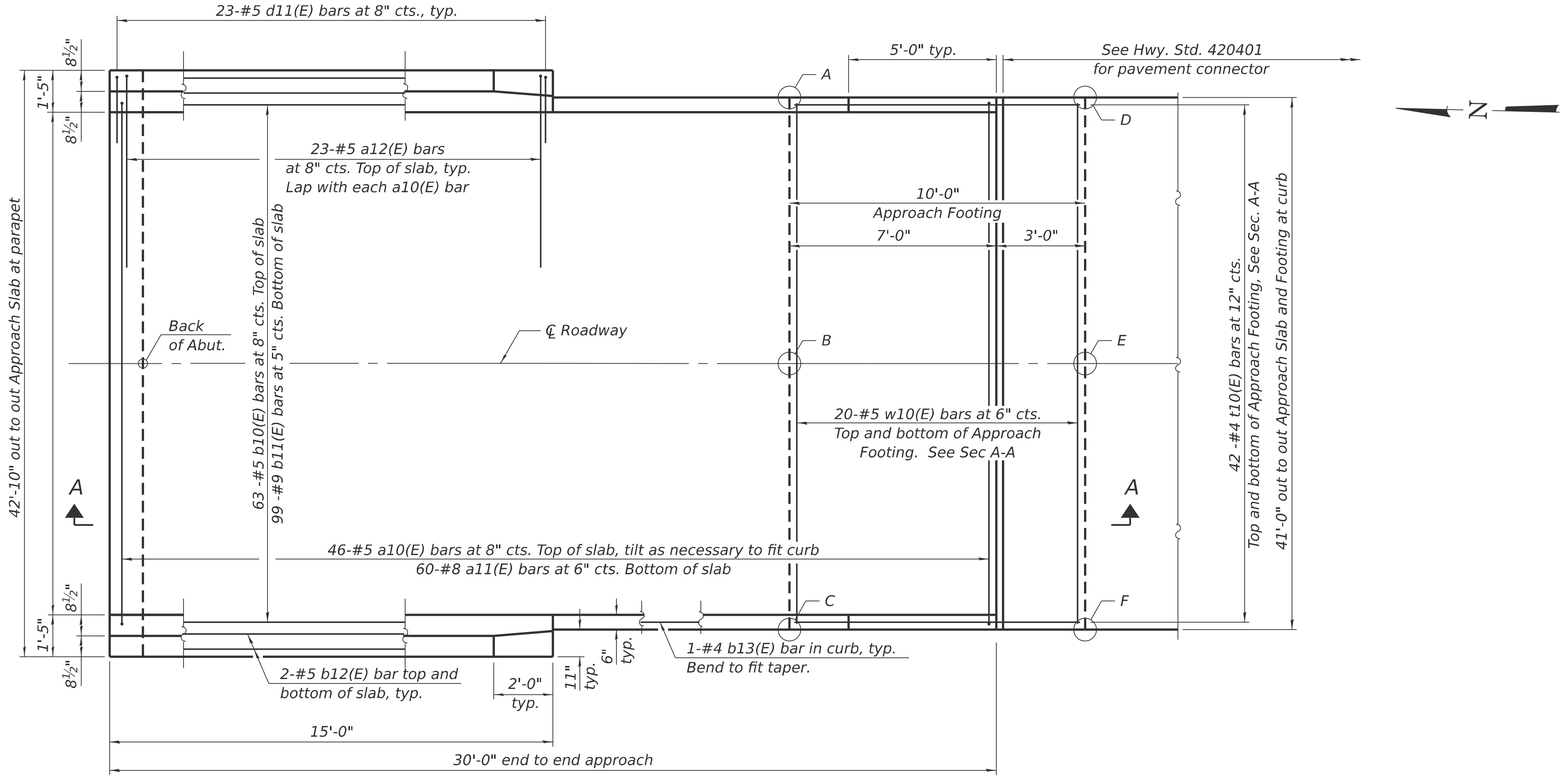

PLAN

(South approach slab shown; North approach slab similar by 180° rotation)

TOP AND BOTTOM ELEVATIONS FOR APPROACH FOOTING

North Approach			South Approach		
Point/ Location	Top	Bottom	Point/ Location	Top	Bottom
A - S.W.	675.76	674.93	A - N.E.	677.47	676.64
B - S.℄	676.07	675.24	B - N.℄	677.86	677.03
C - S.E.	675.68	674.85	C - N.W.	677.55	676.72
D - N.W.	675.68	674.85	D - S.E.	677.55	676.72
E - N.℄	675.99	675.16	E - S.℄	677.94	677.11
F - N.E.	675.60	674.77	F - S.W.	677.63	676.80

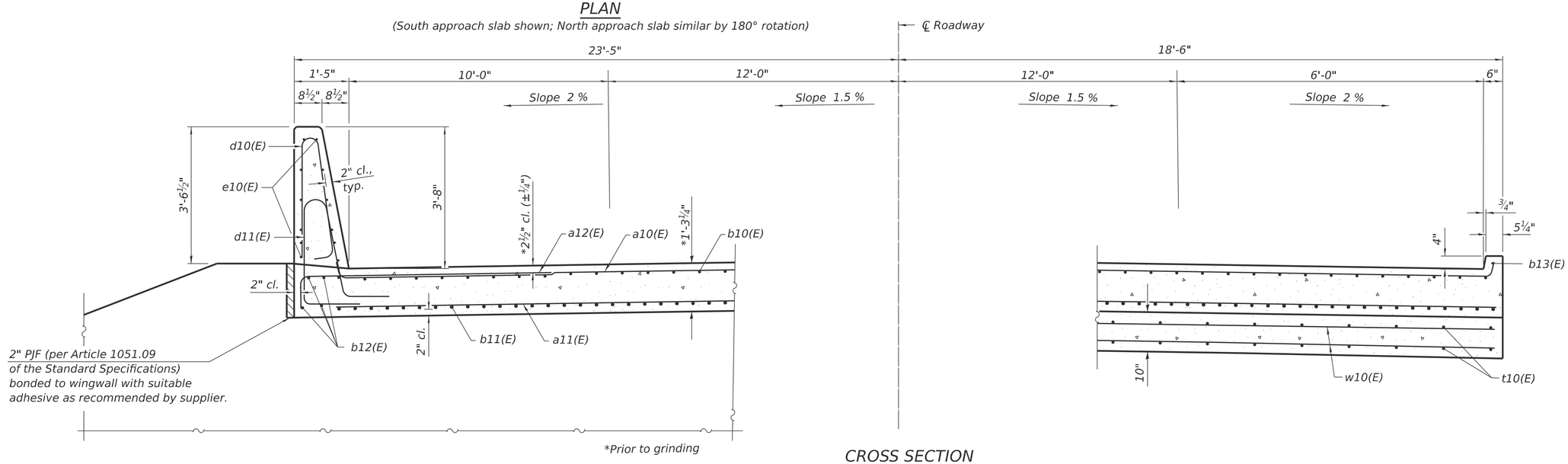

NEAR ABUTMENT

CROSS SECTION

(Looking South)

AT APPROACH FOOTING

BAIA-CIP-44CS-0

4-4-2025

(Sheet 1 of 2)

MODEL: Default
FILE NAME: G:\Users\6\66501-05-IDOT-I-57 Structure Projects-TP&W RR and 2nd St\Survey D366M80\SN038-0005_0006\Consultant_Data\Chamlin_2025\Design\0380005_0006-66M80-019-APP_SLAB_DETS_0005.dgn

Chamlin & Associates

USER NAME = CHAMLIN	DESIGNED - PDF	REVISED -	
	DRAWN - LAG	REVISED -	
	CHECKED - JLS	REVISED -	
PLOT DATE = 2/27/2026	DATE - 04/21/2025	REVISED -	

STATE OF ILLINOIS
DEPARTMENT OF TRANSPORTATION

BRIDGE APPROACH SLAB DETAILS
STRUCTURE NO. 038-0005 (NB)

SCALE: | SHEET 19 OF 39 SHEETS | STA. | TO STA.

F.A.I. RTE.	SECTION	COUNTY	TOTAL SHEETS	SHEET NO.
57	(38-4,38-5)BR,D,CR	IROQUOIS	437	204
		CONTRACT NO. 66M80		
		ILLINOIS	FED. AID PROJECT	

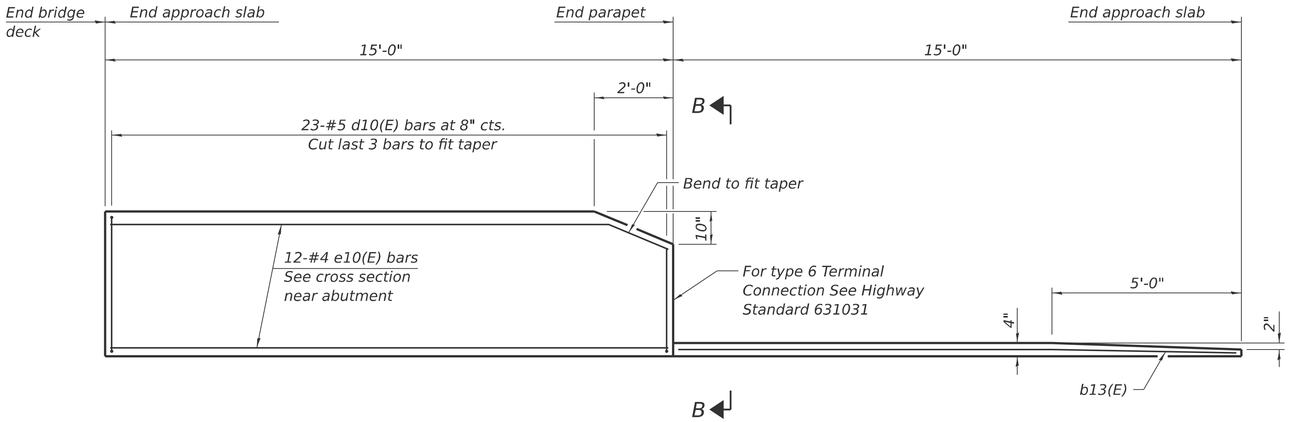

INSIDE ELEVATION OF PARAPET AND CURB

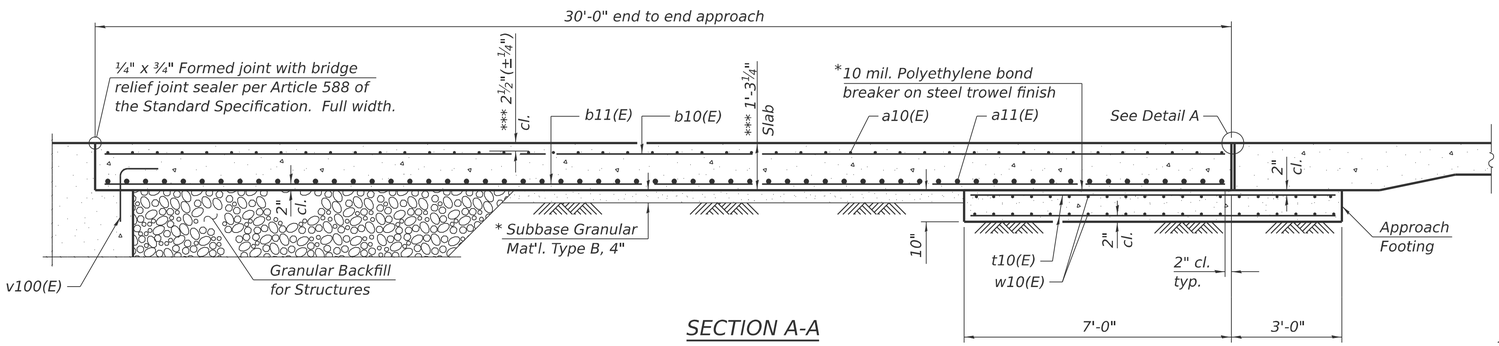

SECTION A-A

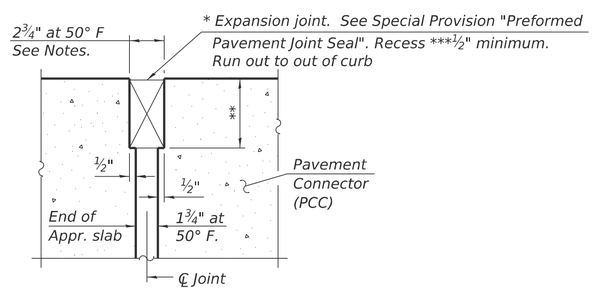

DETAIL A
(at Rt. ∠'s)

* Cost included with Concrete Superstructure (Approach Slab).

** Per manufacturer recommendations

*** Prior to grinding

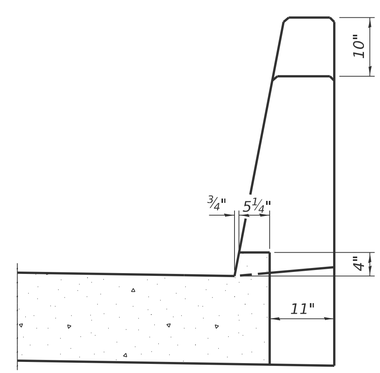

VIEW B-B

Notes:

The joint opening shall be adjusted for temperature per Article 520.04 of the Standard Specifications. However, since this detail is for jointless structures, the length of bridge used to calculate the adjustment shall be equal to half the total bridge length plus the length of the bridge approach slab.

Parapet concrete shall be paid for as Concrete Superstructure.

Approach slab shall be paid for as Concrete Superstructure (Approach Slab).

Approach footing concrete shall be paid for as Concrete Structures.

The approach footing maximum applied service bearing pressure (Qmax) = 2.0 ksf.

Cost of excavation for approach footing included with Concrete Structures.

For Granular Backfill for Structures and drainage treatment details, see sheet 2 of 39.

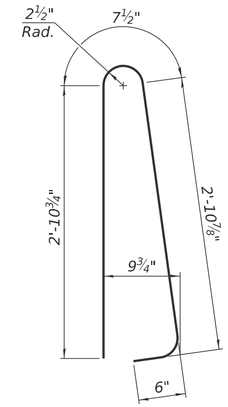

BAR d10(E)

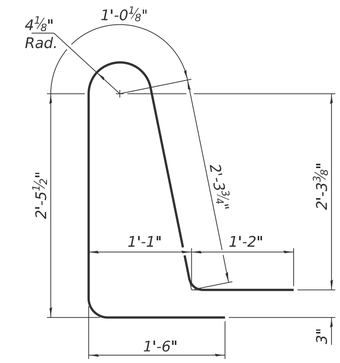

BAR d11(E)

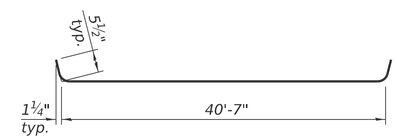

BAR a10(E)

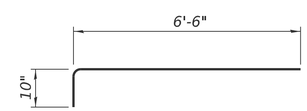

BAR a12(E)

TWO APPROACHES
BILL OF MATERIAL

Bar	No.	Size	Length	Shape
a10(E)	92	#5	41'-6"	
a11(E)	120	#8	40'-8"	
a12(E)	92	#5	7'-4"	
b10(E)	126	#5	29'-8"	
b11(E)	198	#9	29'-8"	
b12(E)	16	#5	14'-8"	
b13(E)	4	#4	14'-8"	
d10(E)	92	#5	7'-0"	
d11(E)	92	#5	8'-6"	
e10(E)	48	#4	14'-8"	
t10(E)	168	#4	9'-8"	
w10(E)	80	#5	40'-8"	
Concrete Superstructure			Cu. Yd.	8.3
Concrete Superstructure (Approach Slab)			Cu. Yd.	117.0
Concrete Structures			Cu. Yd.	25.2
Reinforcement Bars, Epoxy Coated			Pound	48,310

BAIA-CIP-44CS-0 4-4-2025

(Sheet 2 of 2)

MODEL: Default
FILE NAME: G:\Users\66501-05-IDOT-I-57 Structure Projects-TP&W RR and 2nd St\Survey D366M80\SN038-0005_0006\Consultant_Data\Chamlin_2025\Design\0380005_0006-66M80-020-APP_SLAB_DETS_0005.dgn

Chamlin & Associates

USER NAME = CHAMLIN	DESIGNED - PDF	REVISED -	
	DRAWN - LAG	REVISED -	
	CHECKED - JLS	REVISED -	
PLOT DATE = 2/27/2026	DATE - 04/21/2025	REVISED -	

STATE OF ILLINOIS
DEPARTMENT OF TRANSPORTATION

BRIDGE APPROACH SLAB DETAILS
STRUCTURE NO. 038-0005 (NB)

SCALE: SHEET 20 OF 39 SHEETS STA. TO STA.

F.A.I. RTE.	SECTION	COUNTY	TOTAL SHEETS	SHEET NO.
57	(38-4,38-5)BR,D,CR	IROQUOIS	437	205
		CONTRACT NO. 66M80		
		ILLINOIS	FED. AID PROJECT	

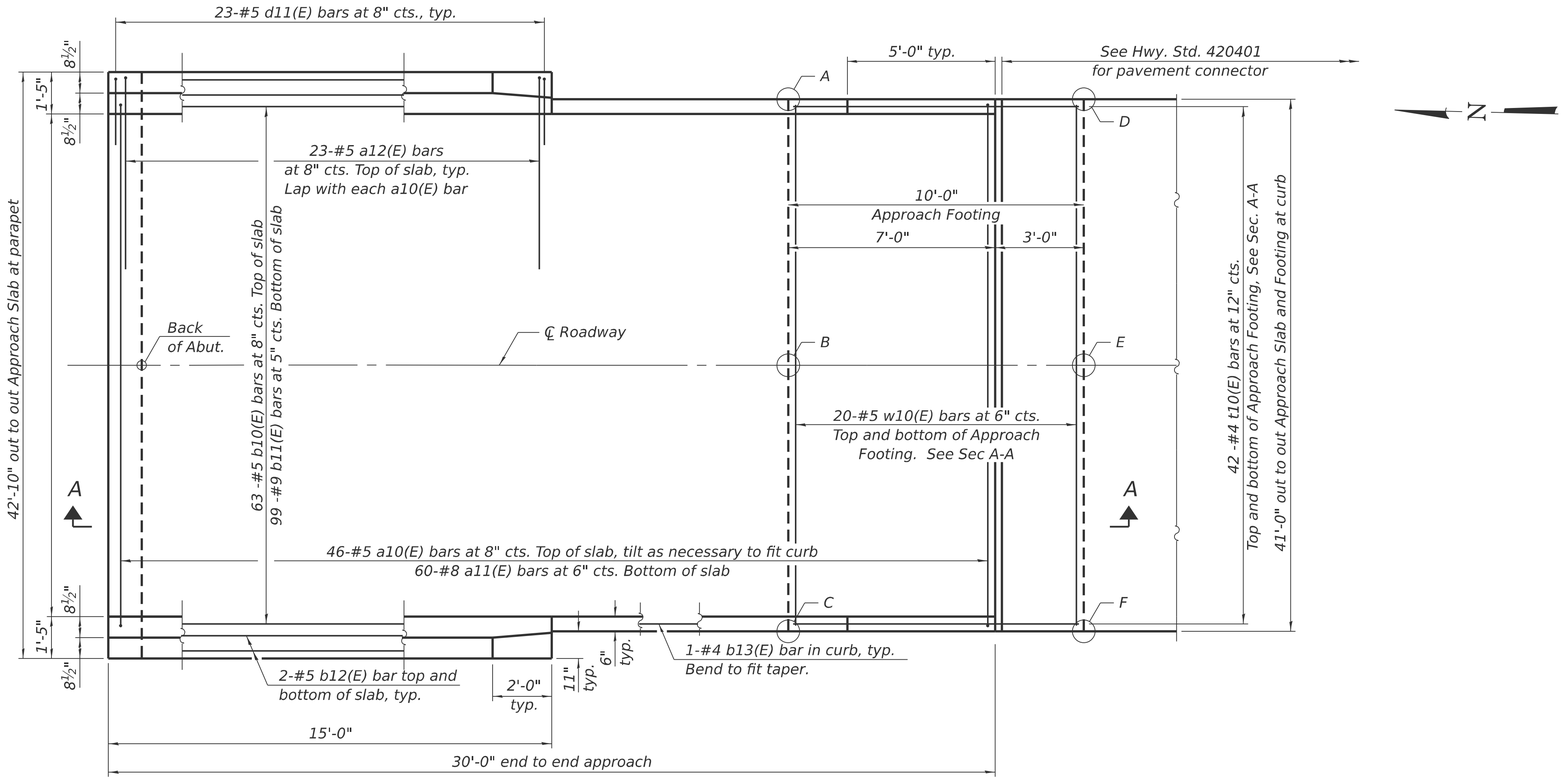

PLAN

(South approach slab shown; North approach slab similar by 180° rotation)

TOP AND BOTTOM ELEVATIONS FOR APPROACH FOOTING

North Approach			South Approach		
Point/ Location	Top	Bottom	Point/ Location	Top	Bottom
A - S.W.	675.70	674.87	A - N.E.	677.56	676.73
B - S.℄	676.09	675.26	B - N.℄	677.87	677.04
C - S.E.	675.78	674.95	C - N.W.	677.48	676.65
D - N.W.	675.62	674.79	D - S.E.	677.64	676.81
E - N.℄	676.01	675.18	E - S.℄	677.95	677.12
F - N.E.	675.70	674.87	F - S.W.	677.56	676.73

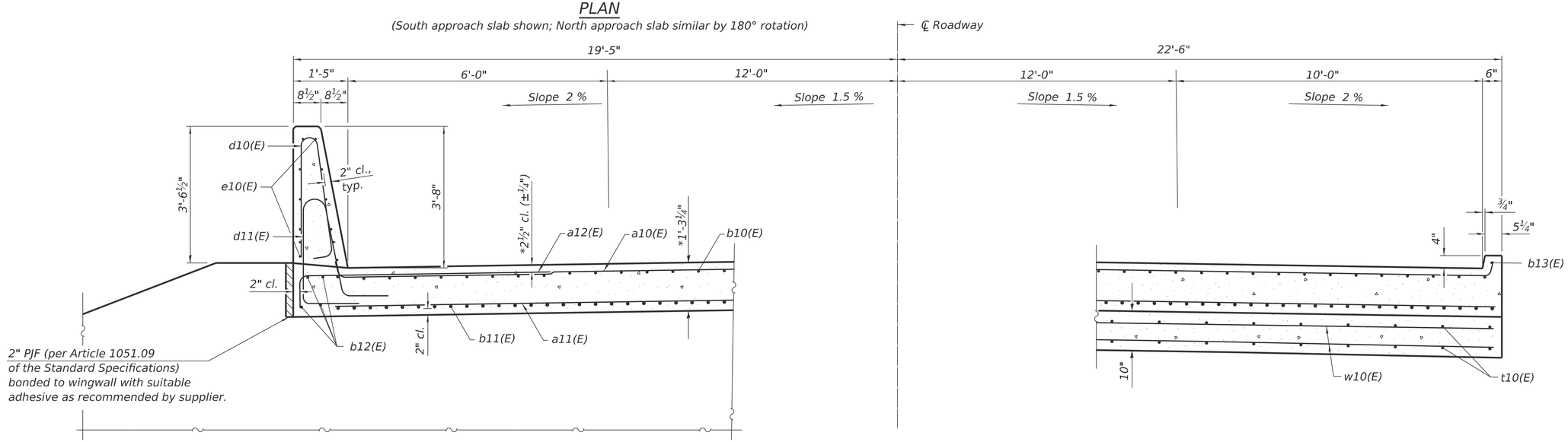

NEAR ABUTMENT

*Prior to grinding

CROSS SECTION

(Looking South)

AT APPROACH FOOTING

BAIA-CIP-44CS-0

4-4-2025

(Sheet 1 of 2)

MODEL: Default
FILE NAME: G:\Users\6\66501-05-IDOT-I-57 Structure Projects-TP&W RR and 2nd St\Survey D368M80\SN038-0005_0006\Consultant_Data\Chamlin 2025\Design\0380005_0006-66M80-021-APP_SLAB_DETS_0006.dgn

Chamlin & Associates

USER NAME = CHAMLIN	DESIGNED - PDF	REVISED -	
	DRAWN - LAG	REVISED -	
	CHECKED - JLS	REVISED -	
PLOT DATE = 2/27/2026	DATE - 04/21/2025	REVISED -	

STATE OF ILLINOIS
DEPARTMENT OF TRANSPORTATION

BRIDGE APPROACH SLAB DETAILS
STRUCTURE NO. 038-0006 (SB)

SCALE: | SHEET 21 OF 39 SHEETS | STA. | TO STA.

F.A.I. RTE.	SECTION	COUNTY	TOTAL SHEETS	SHEET NO.
57	(38-4,38-5)BR,D,CR	IROQUOIS	437	206
		CONTRACT NO. 66M80		
		ILLINOIS	FED. AID PROJECT	

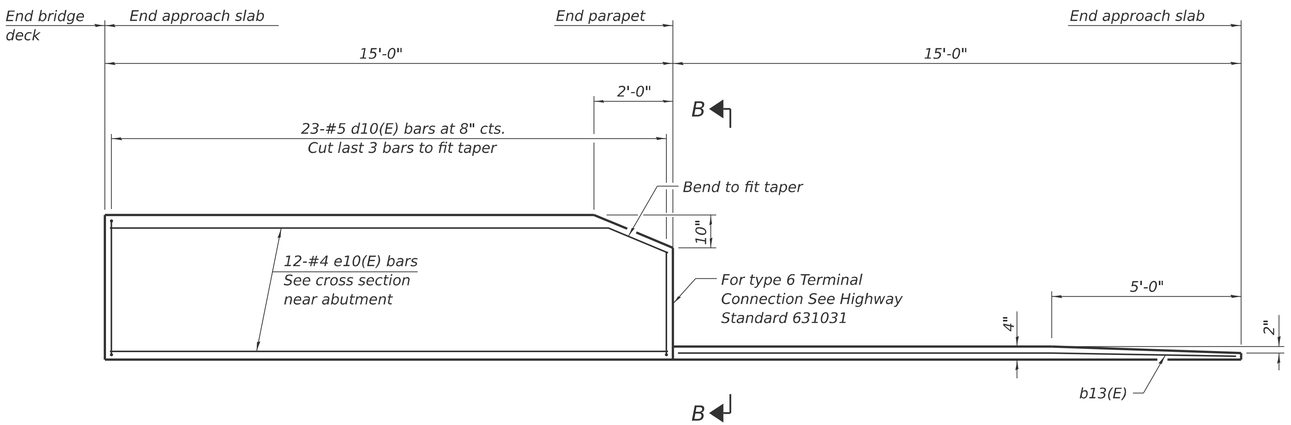

INSIDE ELEVATION OF PARAPET AND CURB

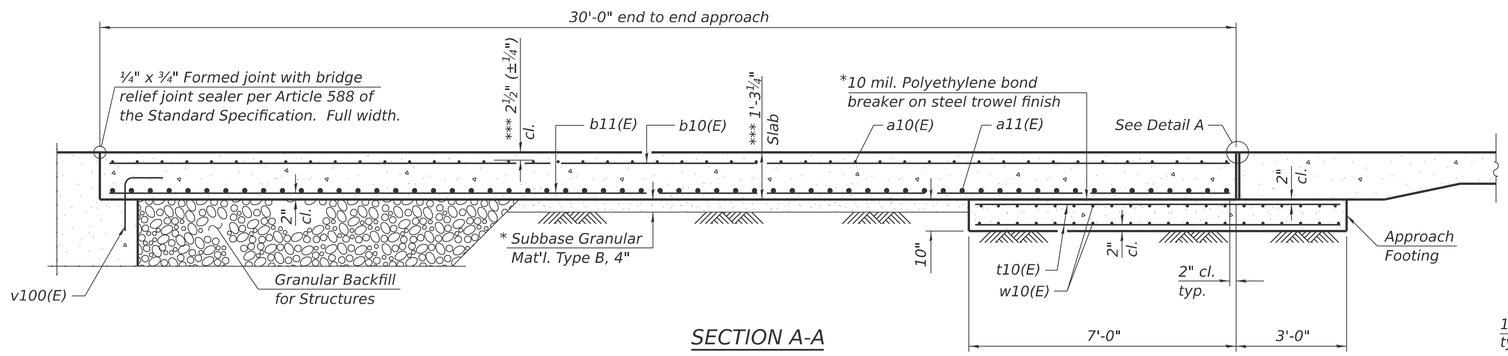

SECTION A-A

Notes:

The joint opening shall be adjusted for temperature per Article 520.04 of the Standard Specifications. However, since this detail is for jointless structures, the length of bridge used to calculate the adjustment shall be equal to half the total bridge length plus the length of the bridge approach slab.

Parapet concrete shall be paid for as Concrete Superstructure.

Approach slab shall be paid for as Concrete Superstructure (Approach Slab).

Approach footing concrete shall be paid for as Concrete Structures.

The approach footing maximum applied service bearing pressure (Qmax) = 2.0 ksf.

Cost of excavation for approach footing included with Concrete Structures.

For Granular Backfill for Structures and drainage treatment details, see sheet 2 of 39.

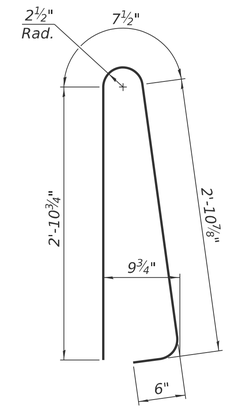

BAR d10(E)

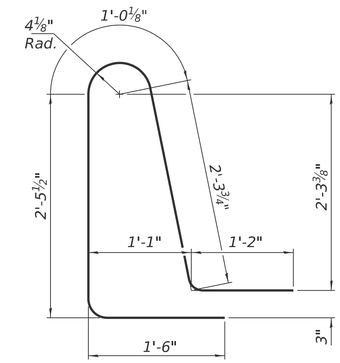

BAR d11(E)

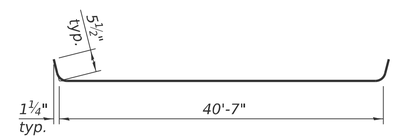

BAR a10(E)

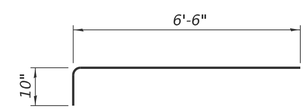

BAR a12(E)

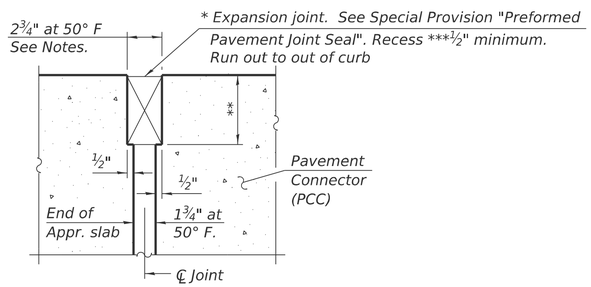

DETAIL A

(at Rt. ∠'s)

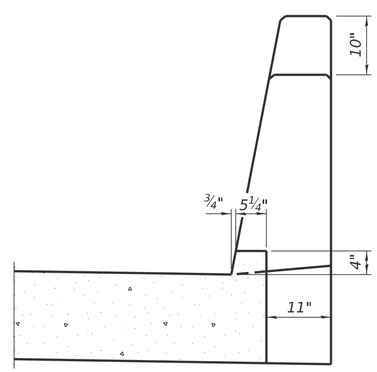

VIEW B-B

TWO APPROACHES
BILL OF MATERIAL

Bar	No.	Size	Length	Shape
a10(E)	92	#5	41'-6"	
a11(E)	120	#8	40'-8"	
a12(E)	92	#5	7'-4"	
b10(E)	126	#5	29'-8"	
b11(E)	198	#9	29'-8"	
b12(E)	16	#5	14'-8"	
b13(E)	4	#4	14'-8"	
d10(E)	92	#5	7'-0"	
d11(E)	92	#5	8'-6"	
e10(E)	48	#4	14'-8"	
t10(E)	168	#4	9'-8"	
w10(E)	80	#5	40'-8"	
Concrete Superstructure			Cu. Yd.	8.3
Concrete Superstructure (Approach Slab)			Cu. Yd.	117.0
Concrete Structures			Cu. Yd.	25.2
Reinforcement Bars, Epoxy Coated			Pound	48,310

* Cost included with Concrete Superstructure (Approach Slab).

** Per manufacturer recommendations

*** Prior to grinding

BAIA-CIP-44CS-0 4-4-2025

(Sheet 2 of 2)

MODEL: Default
FILE NAME: G:\Users\6\66501-05-IDOT-I-57 Structure Projects-TP&W RR and 2nd St\Survey D366M80\SN038-0005_0006\Consultant_Data\Chamlin_2025\Design\0380005_0006-66M80-022-APP_SLAB_DETS_0006.dgn

Chamlin & Associates

USER NAME = CHAMLIN	DESIGNED - PDF	REVISED -	
	DRAWN - LAG	REVISED -	
	CHECKED - JLS	REVISED -	
PLOT DATE = 2/27/2026	DATE - 04/21/2025	REVISED -	

STATE OF ILLINOIS
DEPARTMENT OF TRANSPORTATION

BRIDGE APPROACH SLAB DETAILS
STRUCTURE NO. 038-0006 (SB)

SCALE: SHEET 22 Of 39 SHEETS STA. TO STA.

F.A.I. RTE.	SECTION	COUNTY	TOTAL SHEETS	SHEET NO.
57	(38-4,38-5)BR,D,CR	IROQUOIS	437	207

CONTRACT NO. 66M80

ILLINOIS FED. AID PROJECT

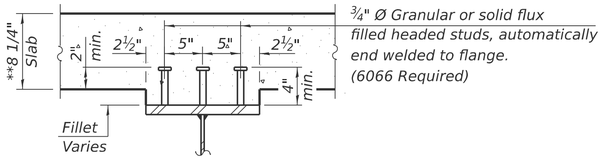

SECTION A-A

**Prior to grinding

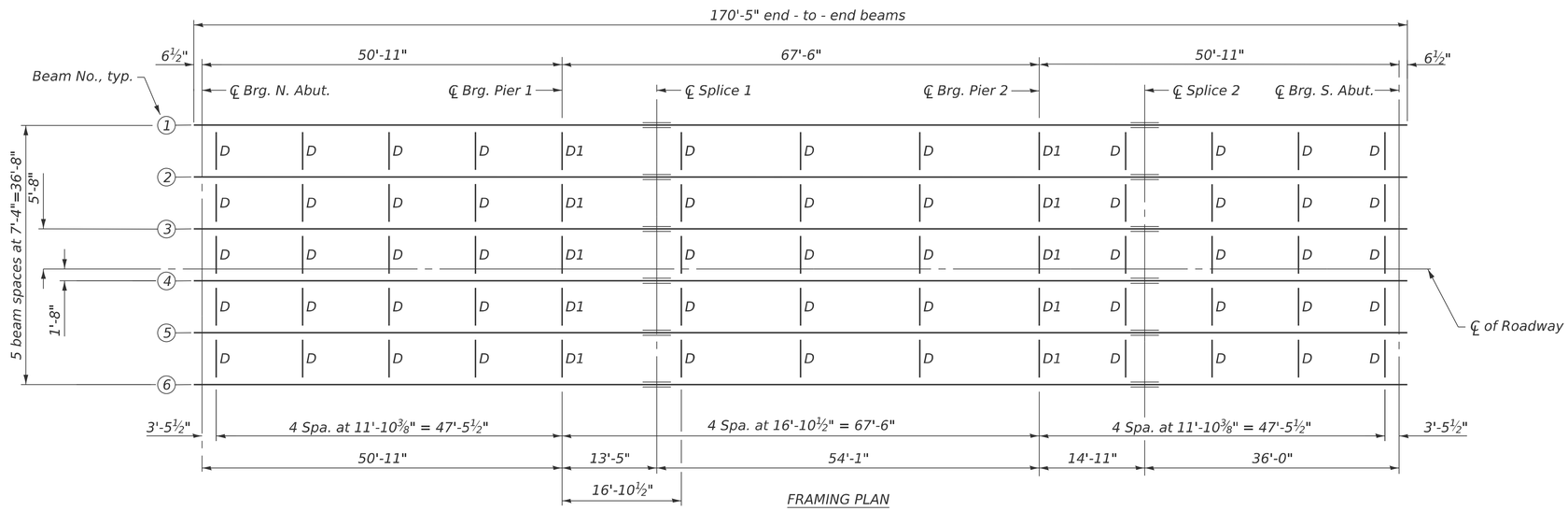

FRAMING PLAN

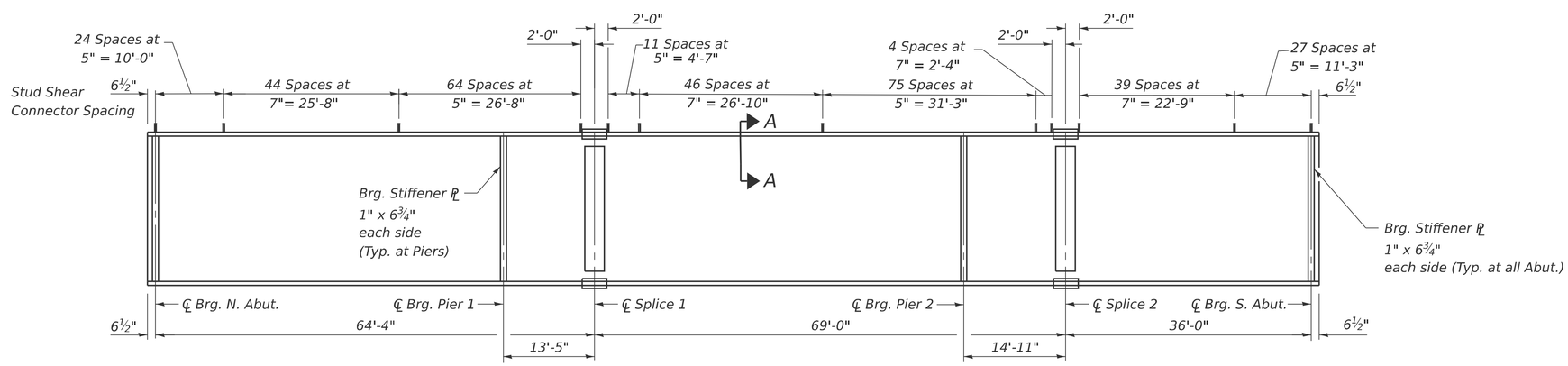

BEAM ELEVATION
(All beams are W30x173, AASHTO M270, Grade 50, CVN)

* TOP OF BEAM ELEVATIONS

Location	℄ Bearing N. Abut.	℄ Bearing Pier 1	℄ Splice 1	℄ Bearing Pier 2	℄ Splice 2	℄ Bearing S. Abut.
Beam 1	676.45	676.87	676.98	677.42	677.54	677.83
Beam 2	676.60	677.01	677.12	677.57	677.69	677.98
Beam 3	676.71	677.13	677.24	677.68	677.80	678.10
Beam 4	676.77	677.19	677.30	677.74	677.86	678.16
Beam 5	676.66	677.08	677.19	677.63	677.75	678.05
Beam 6	676.53	676.95	677.06	677.50	677.62	677.92

*For fabrication use only.

Notes:
Load carrying components designated "CVN" shall conform to the Charpy-V-Notch Impact Energy Requirement, Zone 2.
See sheet 26 of 39 for additional structural steel details.
All diaphragms between beams or girders shall be installed with erection pins and bolts in accordance with the erection plan approved by the Engineer.
Individual diaphragms at supports may be temporarily disconnected to install bearing anchor bolts.

MODEL: Default
FILE NAME: G:\Users\6\66501-05-IDOT-I-57 Structure Projects-TP&W RR and 2nd St\Survey D366M80\SN038-0005_0006\Consultant_Data\Chamlin_2025\Design\0380005_0006-66M80-023-STL_FRAM_PLN_0005.dgn

Chamlin & Associates

USER NAME = CHAMLIN	DESIGNED - PDF	REVISED -	
	DRAWN - LAG	REVISED -	
	CHECKED - JLS	REVISED -	
PLOT DATE = 2/27/2026	DATE - 04/21/2025	REVISED -	

STATE OF ILLINOIS
DEPARTMENT OF TRANSPORTATION

STEEL FRAMING PLAN
STRUCTURE NO. 038-0005 (NB)

SCALE: | SHEET 23 OF 39 SHEETS | STA. | TO STA.

F.A.I. RTE.	SECTION	COUNTY	TOTAL SHEETS	SHEET NO.
57	(38-4,38-5)BR,D,CR	IROQUOIS	437	208
		CONTRACT NO. 66M80		
		ILLINOIS	FED. AID PROJECT	

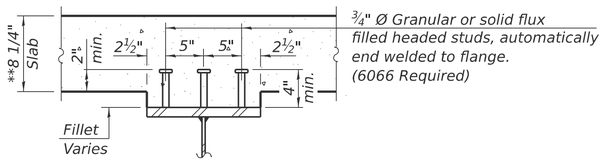

SECTION A-A

**Prior to grinding

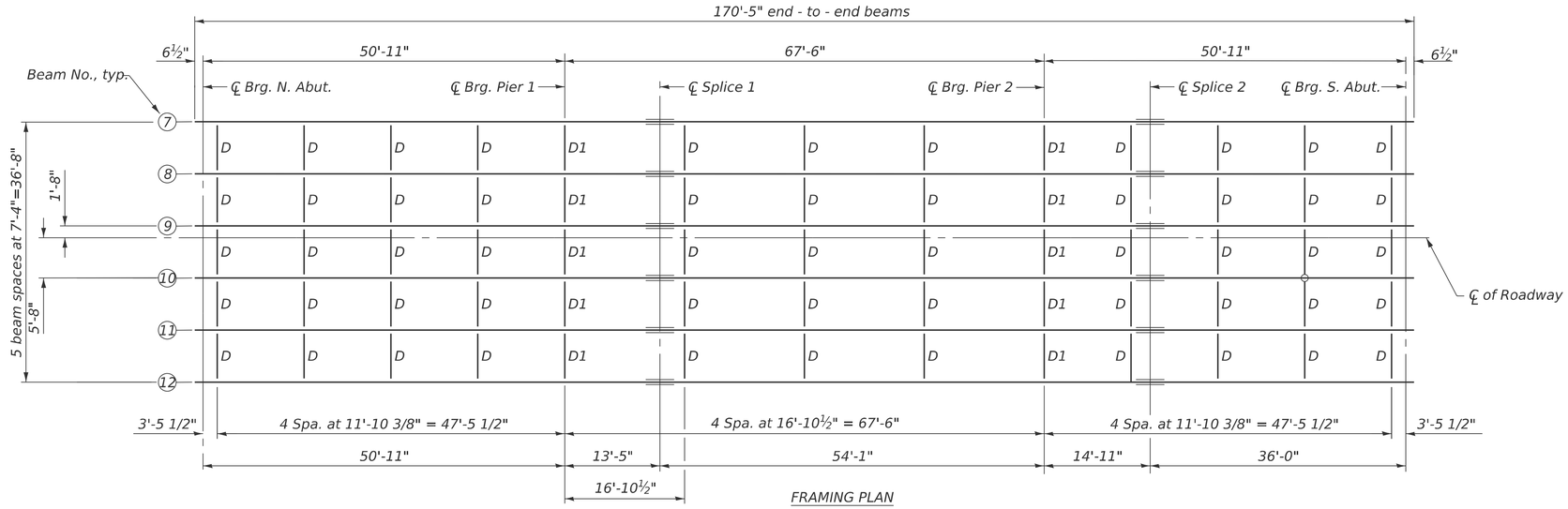

FRAMING PLAN

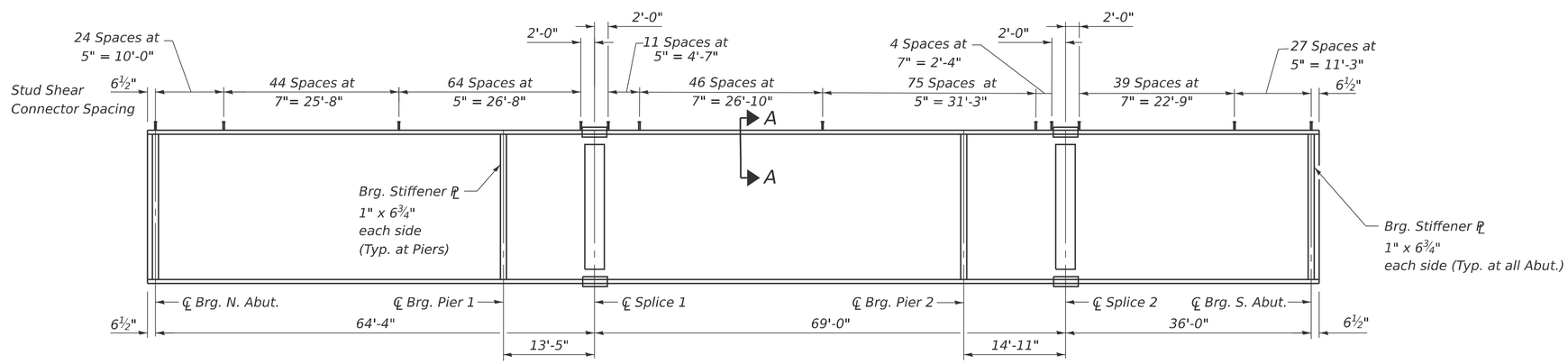

BEAM ELEVATION
(All beams are W30x173, AASHTO M270, Grade 50, CVN)

* TOP OF BEAM ELEVATIONS

Location	℄ Bearing N. Abut.	℄ Bearing Pier 1	℄ Splice 1	℄ Bearing Pier 2	℄ Splice 2	℄ Bearing S. Abut.
Beam 7	676.54	676.96	677.07	677.51	677.63	677.93
Beam 8	676.67	677.09	677.20	677.64	677.76	678.06
Beam 9	676.78	677.20	677.31	677.75	677.87	678.17
Beam 10	676.72	677.14	677.25	677.69	677.81	678.11
Beam 11	676.61	677.03	677.14	677.58	677.70	677.99
Beam 12	676.46	676.88	676.99	677.43	677.55	677.85

*For fabrication use only.

Notes:

Load carrying components designated "CVN" shall conform to the Charpy-V-Notch Impact Energy Requirement, Zone 2.

See sheet 26 of 39 for additional structural steel details.

All diaphragms between beams or girders shall be installed with erection pins and bolts in accordance with the erection plan approved by the Engineer. Individual diaphragms at supports may be temporarily disconnected to install bearing anchor bolts.

INTERIOR BEAM MOMENT TABLE						
		0.4 Sp. 1	Pier 1	0.5 Sp. 2	PIER 2	0.6 Sp. 3
I_s	(in⁴)	8230	8230	8230	8230	8230
I_c (n)	(in⁴)	22045.9	———	22045.9	———	22045.9
I_c (3n)	(in⁴)	16297.8	———	16297.8	———	16297.8
I_c (cr)	(in⁴)	———	10840	———	10840	———
S_s	(in³)	541.6	541.6	541.6	541.6	541.6
S_c (n)	(in³)	779.4	———	779.4	———	779.4
S_c (3n)	(in³)	709.4	———	709.4	———	709.4
S_c (cr)	(in³)	———	594.3	———	594.3	———
S_x	(in³)	777.47	———	776.98	———	777.47
DC1	(k/')	0.956	0.956	0.956	0.956	0.956
M_{DC1}	('k)	159.4	345.3	199.3	345.3	159.4
DC2	(k/')	0.192	0.192	0.192	0.192	0.192
M_{DC2}	('k)	32	69.3	40	69.3	32
DW	(k/')	0.17	0.17	0.17	0.17	0.17
M_{DW}	('k)	27.8	60.2	34.7	60.2	27.8
LLDF		0.633	0.61	0.587	0.61	0.633
M_{LL+IM}	('k)	547.3	551.4	564.1	551.4	547.3
f_f (Strength I)	(ksi)	0.0	0.0	0.0	0.0	0.0
$M_u + \frac{1}{3} f_f S_x$	('k)	1238.6	———	1338.3	———	1238.6
$\Phi_f M_n$	('k)	3786.8	———	3786.8	———	3786.8
f_s DC1	(ksi)	3.5	7.7	4.4	7.7	3.5
f_s DC2	(ksi)	0.5	1.4	0.7	1.4	0.5
f_s DW	(ksi)	0.5	1.2	0.6	1.2	0.5
f_s (LL+IM)	(ksi)	8.4	11.1	8.7	11.1	8.4
f_f (Service II)	(ksi)	0.0	0.0	0.0	0.0	0.0
$f_s + f_f/2$ (Service II)	(ksi)	15.5	24.6	17	24.6	15.5
Service II Resistance	(ksi)	47.5	47.5	47.5	47.5	47.5
$f_s + f_f/3$ (Strength I)	(ksi)	———	32.4	———	32.4	———
$\Phi_f F_n$	(ksi)	———	50	———	50	———
V_f	(k)	16.3	———	16.7	———	16.3

BEAM REACTION TABLE					
		N Abut.	Pier 1	PIER 2	S. ABUT
LLDF		0.767	0.77	0.77	0.767
OCF		———	———	———	———
R_{DC1}	(k)	* 41.9	63.4	63.4	* 41.9
R_{DC2}	(k)	3.5	12.7	12.7	3.5
R_{DW}	(k)	3.1	11	11	3.1
R_{LL}	(k)	54.6	102.8	102.8	54.6
R_{Im}	(k)	14.2	22.6	22.6	14.2
R_{Total} (Strength I)(Impact)	(k)	181.7	331.1	331.1	181.7
R_{Total} (Strength I)(No Impact)	(k)	156.8	291.6	291.6	156.8

RDC1 includes service reaction due to weight of approach slab and parapet on approach slab

I_s , S_s : Non-composite moment of inertia and section modulus of the steel section used for computing f_s (Total-Strength I, and Service II) due to non-composite dead loads (in.⁴ and in.³).

I_c (n), S_c (n): Composite moment of inertia and section modulus of the steel and deck based upon the modular ratio, "n", used for computing f_s (Total-Strength I, and Service II) in uncracked sections due to short-term composite live loads (in.⁴ and in.³).

I_c (3n), S_c (3n): Composite moment of inertia and section modulus of the steel and deck based upon 3 times the modular ratio, "3n", used for computing f_s (Total-Strength I, and Service II) in uncracked sections, due to long-term composite (superimposed) dead loads (in.⁴ and in.³).

I_c (cr), S_c (cr): Composite moment of inertia and section modulus of the steel and longitudinal deck reinforcement, used for computing f_s (Total-Strength I and Service II) in cracked sections, due to both short-term composite live loads and long-term composite (superimposed) dead loads (in.⁴ and in.³).

S_x : Section modulus about the major axis of a section to the controlling flange, tension or compression, taken as yield moment with respect to the controlling flange over the yield strength of the controlling flange (in.³).

DC1: Un-factored non-composite dead load (kips/ft.).

M_{DC1}: Un-factored moment due to non-composite dead load (kip-ft.).

DC2: Un-factored long-term composite (superimposed excluding future wearing surface) dead load (kips/ft.).

M_{DC2}: Un-factored moment due to long-term composite (superimposed excluding future wearing surface) dead load (kip-ft.).

DW: Un-factored long-term composite (superimposed future wearing surface only) dead load (kips/ft.).

M_{DW} : Un-factored moment due to long-term composite (superimposed future wearing surface only) dead load (kip-ft.).

LLDF: Live Load Distribution Factor for moment and shear computed according to Article 4.6.2.2 and further IDOT provisions.

M_{LL+IM}: Un-factored live load moment plus dynamic load allowance (impact) (kip-ft.).

M_u : Strength I load combination of factored design moments (kip-ft.).
$1.25 (M_{DC1} + M_{DC2}) + 1.5 M_{DW} + 1.75 M_{LL+IM}$

f_f : Factored calculated flange lateral bending stress as calculated using Article 6.10.1.6 and as further simplified by IDOT provisions (ksi).

$\Phi_f M_n$: Factored nominal flexural resistance of the section determined as specified in Article 6.10.7.1 or A6 as applicable (kip-ft.).

f_s DC1: Un-factored stress at edge of flange for controlling steel flange due to vertical non-composite dead loads as calculated below (ksi).
M_{DC1} / S_s

f_s DC2: Un-factored stress at edge of flange for controlling steel flange due to vertical composite dead loads as calculated below (ksi).
M_{DC2} / S_c (3n) or M_{DC2} / S_c (cr) as applicable.

f_s DW: Un-factored stress at edge of flange for controlling steel flange due to vertical composite future wearing surface loads as calculated below (ksi).
M_{DW} / S_c (3n) or M_{DW} / S_c (cr) as applicable.

f_s (LL+ IM): Un-factored stress at edge of flange for controlling steel flange due to vertical composite live load plus impact loads as calculated below (ksi).
M_{LL+IM} / S_c (n) or M_{LL+IM} / S_c (cr) as applicable.

$f_s + f_f / 2$ (Service II): Sum of stresses as computed below (ksi).
f_s DC1 + f_s DC2 + f_s DW + 1.3 f_s (LL+ IM) + f_f /2

Service II Resistance: Composite ($0.95R_hF_{yf}$) or noncomposite ($0.80R_hF_{yf}$) stress capacity according to Article 6.10.4.2 (ksi).

$f_s + f_f / 3$ (Strength I): Sum of stresses as computed below on non-compact sections (ksi).
1.25 (f_s DC1 + f_s DC2) + 1.5 f_s DW + 1.75 f_s (LL+ IM) + f_f /3

$\Phi_f F_n$: Factored nominal flexural resistance of the section as specified in Article 6.10.7.2 or 6.10.8 as applicable (ksi).

V_f: Maximum factored shear range in span computed according to Article 6.10.10.

OCF: Obtuse Correction Factor according to Article 4.6.2.2.3c or as further simplified by IDOT provisions.

R_{DC1}: Un-factored reaction due to non-composite dead load (kip).

R_{DC2}: Un-factored reaction due to long-term composite (superimposed excluding future wearing surface) dead load (kip).

R_{DW} : Un-factored reaction due to long-term composite (superimposed future wearing surface only) dead load (kip).

R_{LL} : Un-factored live load reaction (kip).

R_{IM} : Un-factored dynamic load allowance (impact) (kip).

R_{Total} (Strength I)(Impact): Strength I load combination of factored design reactions (kip).
$1.25 (R_{DC1} + R_{DC2}) + 1.5R_{DW} + 1.75 (R_{LL} + R_{IM})$

R_{Total} (Strength I)(No Impact): Strength I load combination of factored design reactions, not including dynamic load allowance (Impact) (kip).
$1.25 (R_{DC1} + R_{DC2}) + 1.5R_{DW} + 1.75 (R_{LL})$

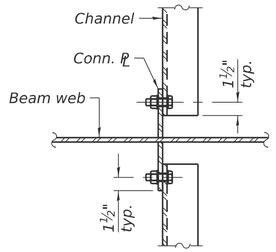

DETAIL A

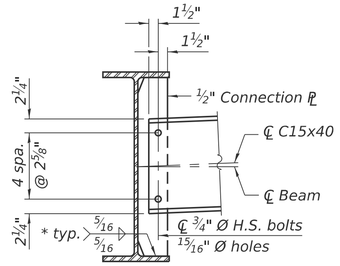

INTERIOR DIAPHRAGM - D

* 3 sides of each stiffener and/or connection PL.

(110 Required)

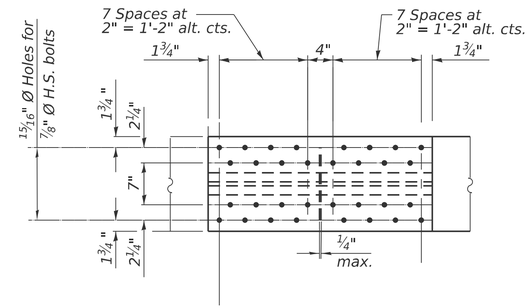

PLAN

(Top and Bottom Flange)

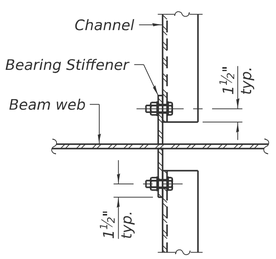

DETAIL A1

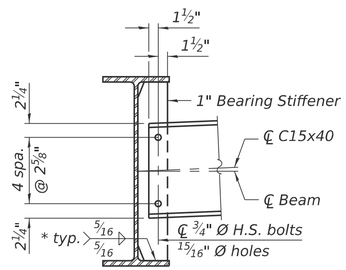

INTERIOR DIAPHRAGM - D1

* 3 sides of each stiffener and/or connection PL.

(20 Required)

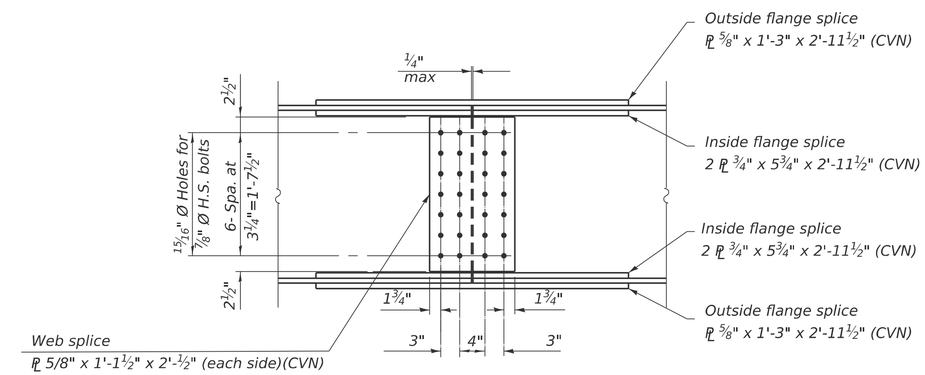

ELEVATION

SPLICE DETAIL

(24 Required)

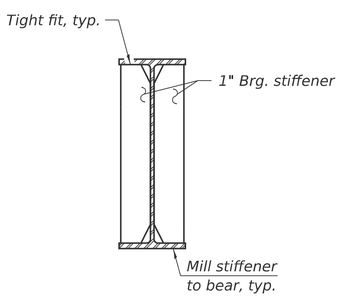

BEARING STIFFENER AT ABUTMENT AND PIER

(48 Required)

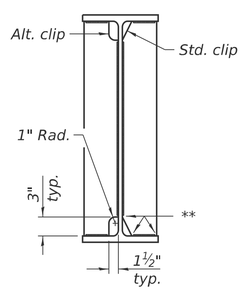

WELD LIMITS AND CLIP DETAILS

** Stop welds ¼" (±⅛") from edges as shown. Typical.

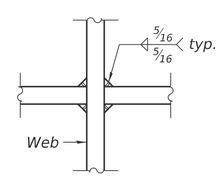

WEB WELD DETAIL

Notes:

Two hardened washers required for each set of oversized holes.

Alternate channels of equal depth and larger weight are permitted to facilitate material acquisition. Alternate channels, if utilized, shall be provided at no additional cost to the Department.

Load carrying components designated "CVN" shall conform to the Cherry-V-Notch Impact Energy Requirement, Zone 2. All beams, bearing stiffeners and splices shall be AASHTO M270 Grade 50.

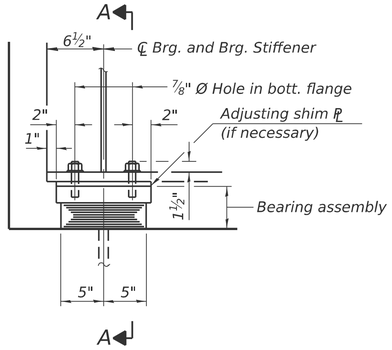

ELEVATION AT ABUT.

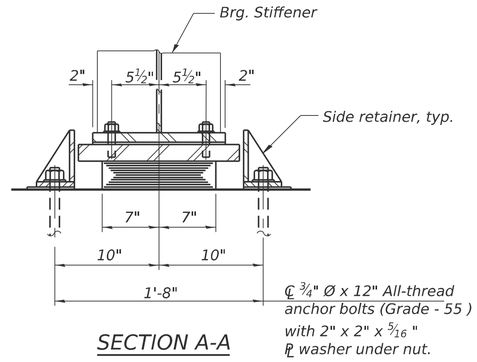

SECTION A-A

TYPE I ELASTOMERIC EXP. BRG.

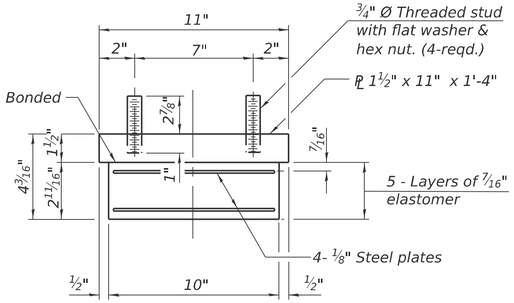

BEARING ASSEMBLY

Notes:
Side retainers and stainless steel plates shall be included in the cost of Elastomeric Bearing Assembly, Type I.

Anchor bolts and side retainers at all supports shall be installed as each member is erected unless an equivalent temporary means of lateral restraint is used.

The structural steel plates of the Bearing Assembly shall conform to the requirements of AASHTO M270 Grade 50.

Two 1/8 in. adjusting shims shall be provided for each bearing in addition to all other plates or shims and placed as shown on bearing details.

All bearing plates, side retainers, anchor bolts, nuts, washers, and pintles shall be galvanized according to AASHTO MIII or M232 as applicable.

Note:
Shim plates shall not be placed under bearing assembly.

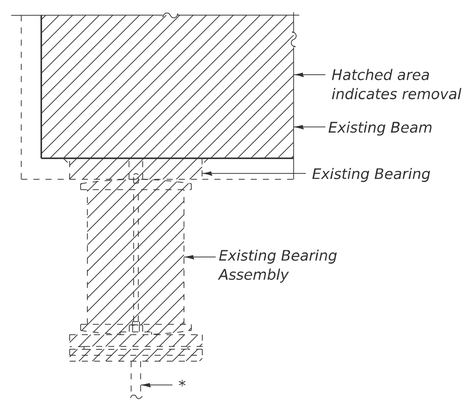

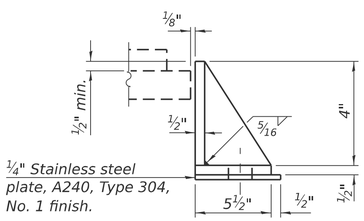

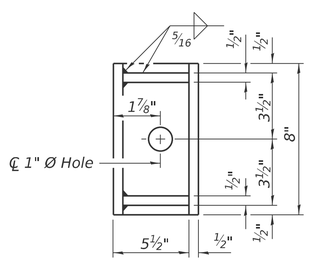

SIDE RETAINER

Equivalent rolled angle with stiffeners will be allowed in lieu of welded plates.

EXISTING BEARING REMOVAL DETAIL

Cost include with Removal of Existing Superstructure

* Burn existing anchor bolts flush with existing concrete surface. Grind existing anchor bolts smooth and seal with epoxy.

BILL OF MATERIAL

Item	Unit	Total
Elastomeric Bearing Assembly Type I	Each	24
Anchor Bolts, ¾"	Each	48

I-2E-1

5/15/2023

MODEL: Default
FILE NAME: G:\Users\6\66501-05-IDOT-I-57 Structure Projects-TP&W RR and 2nd St\Survey D366M80\SN038-0005_0006\Consultant_Data\Chamlin_2025\Design\0380005_0006-66M80-027-ABUT_BRG_DETS.dgn

Chamlin & Associates

USER NAME = CHAMLIN	DESIGNED - PDF	REVISED -	
	DRAWN - LAG	REVISED -	
	CHECKED - JLS	REVISED -	
PLOT DATE = 2/27/2026	DATE - 04/21/2025	REVISED -	

STATE OF ILLINOIS
DEPARTMENT OF TRANSPORTATION

ABUTMENT BEARING DETAILS
STRUCTURE NO. 038-0005 (NB) & 038-0006 (SB)

SCALE: SHEET 27 OF 39 SHEETS STA. TO STA.

F.A.I. RTE.	SECTION	COUNTY	TOTAL SHEETS	SHEET NO.
57	(38-4,38-5)BR,D,CR	IROQUOIS	437	212
		CONTRACT NO. 66M80		
		ILLINOIS FED. AID PROJECT		

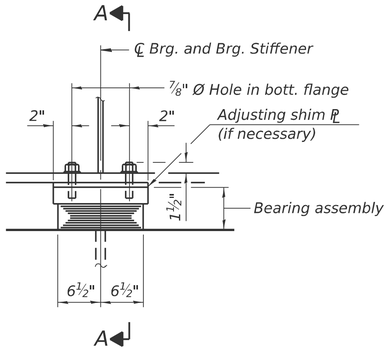

ELEVATION AT PIER 2

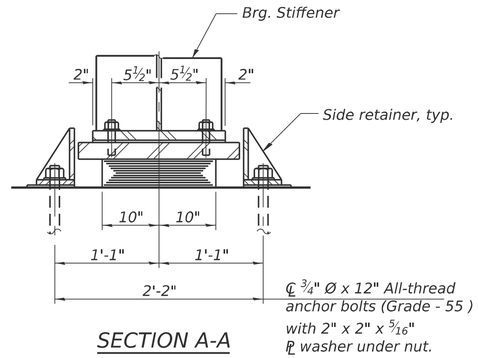

SECTION A-A

TYPE I ELASTOMERIC EXP. BRG.

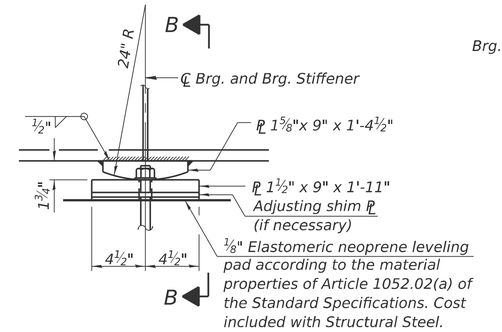

ELEVATION AT PIER 1

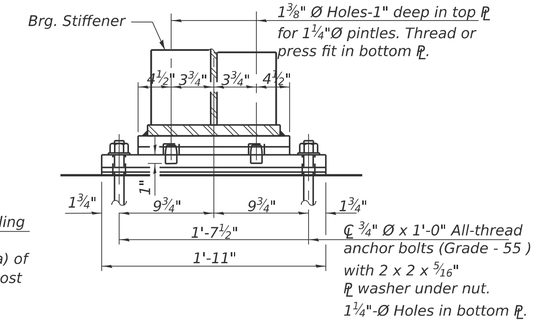

SECTION B-B

FIXED BEARING

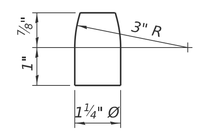

PINTLE

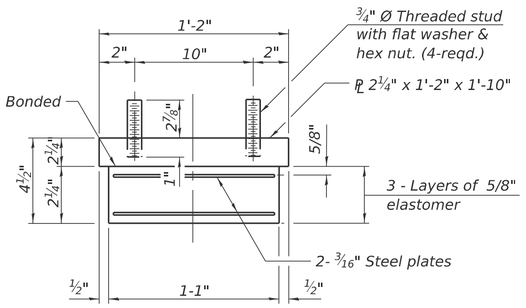

BEARING ASSEMBLY

Note:
Shim plates shall not be placed under bearing assembly.

Notes:
Side retainers and stainless steel plates shall be included in the cost of Elastomeric Bearing Assembly, Type I.

Anchor bolts and side retainers at all supports shall be installed as each member is erected unless an equivalent temporary means of lateral restraint is used.

The structural steel plates of the Bearing Assembly shall conform to the requirements of AASHTO M270 Grade 50.

The structural steel plates and pintles shall conform to the requirements of AASHTO M270 Grade 50.

Two 1/8 in. adjusting shims shall be provided for each bearing in addition to all other plates or shims and placed as shown on bearing details.

All bearing plates, side retainers, anchor bolts, nuts, washers and pintles shall be galvanized according to AASHTO M111 or M232 as applicable.

At fixed bearings, all bearing plates and pintles shall be metallized. See special provisions for "Metallizing of Structural Steel".

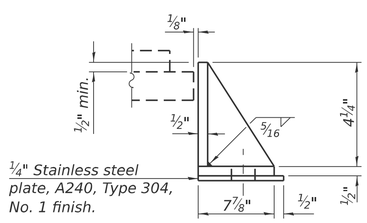

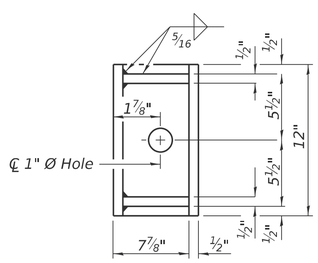

SIDE RETAINER

Equivalent rolled angle with stiffeners will be allowed in lieu of welded plates.

BILL OF MATERIAL

Item	Unit	Total
Elastomeric Bearing Assembly Type I	Each	12
Anchor Bolts, ¾"	Each	48

I-2E-1

5/15/2023

MODEL: Default
FILE NAME: G:\Users\6\66501-05-IDOT-I-57 Structure Projects-TP&W RR and 2nd St\Survey D366M80\SN038-0005_0006\Consultant_Data\Chamlin_2025\Design\0380005_0006-66M80-028-PIER_BRG_DETS.dgn

Chamlin & Associates

USER NAME = CHAMLIN	DESIGNED - PDF	REVISED -	
	DRAWN - LAG	REVISED -	
	CHECKED - JLS	REVISED -	
PLOT DATE = 2/27/2026	DATE - 04/21/2025	REVISED -	

STATE OF ILLINOIS
DEPARTMENT OF TRANSPORTATION

PIER BEARING DETAILS
STRUCTURE NO. 038-0005 (NB) & 038-0006 (SB)

SCALE: SHEET 28 OF 39 SHEETS STA. TO STA.

F.A.I. RTE.	SECTION	COUNTY	TOTAL SHEETS	SHEET NO.
57	(38-4,38-5)BR,D,CR	IROQUOIS	437	213
		CONTRACT NO. 66M80		
		ILLINOIS	FED. AID PROJECT	

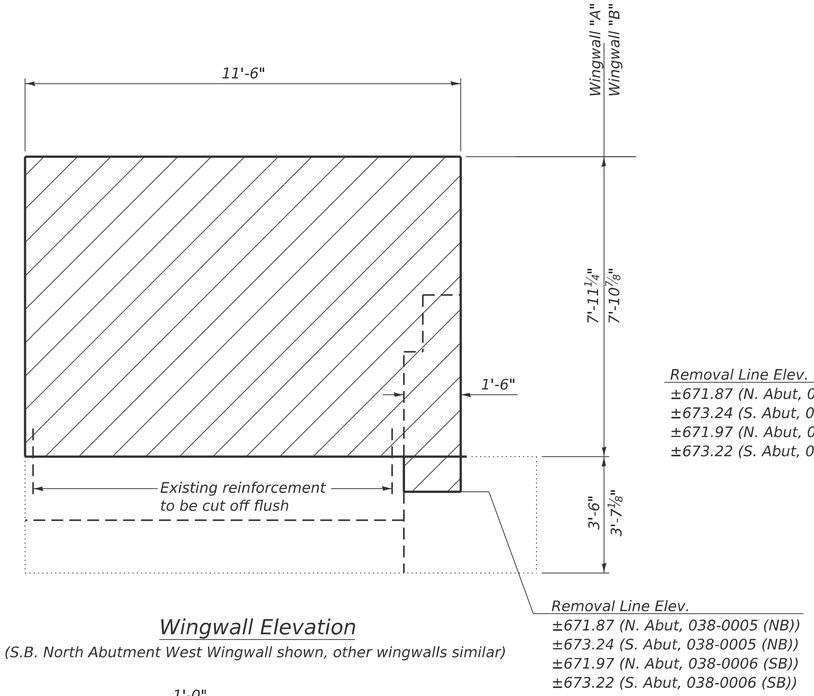

Wingwall Elevation

(S.B. North Abutment West Wingwall shown, other wingwalls similar)

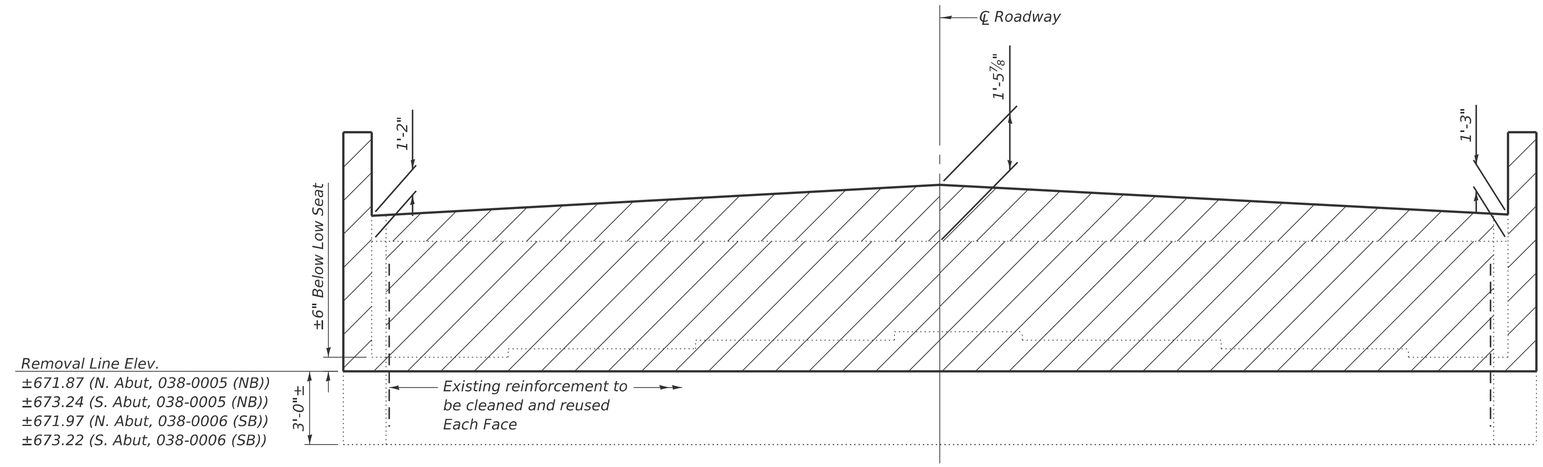

Elevation

(S.B. North Abutment shown, S.B. South Abutment and N.B. abutments similar)

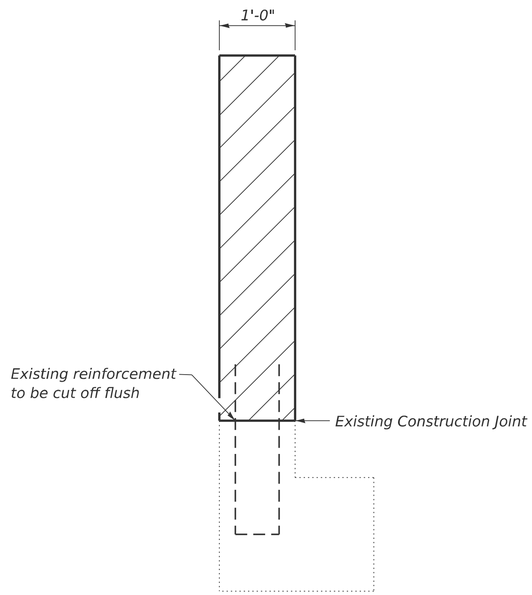

Section A-A

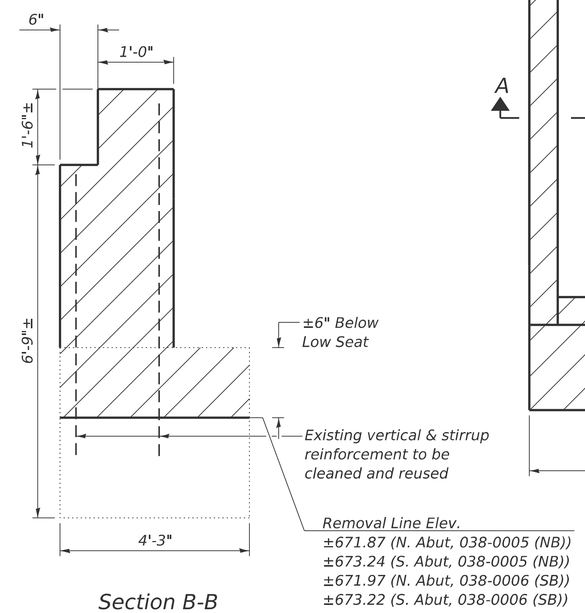

Section B-B

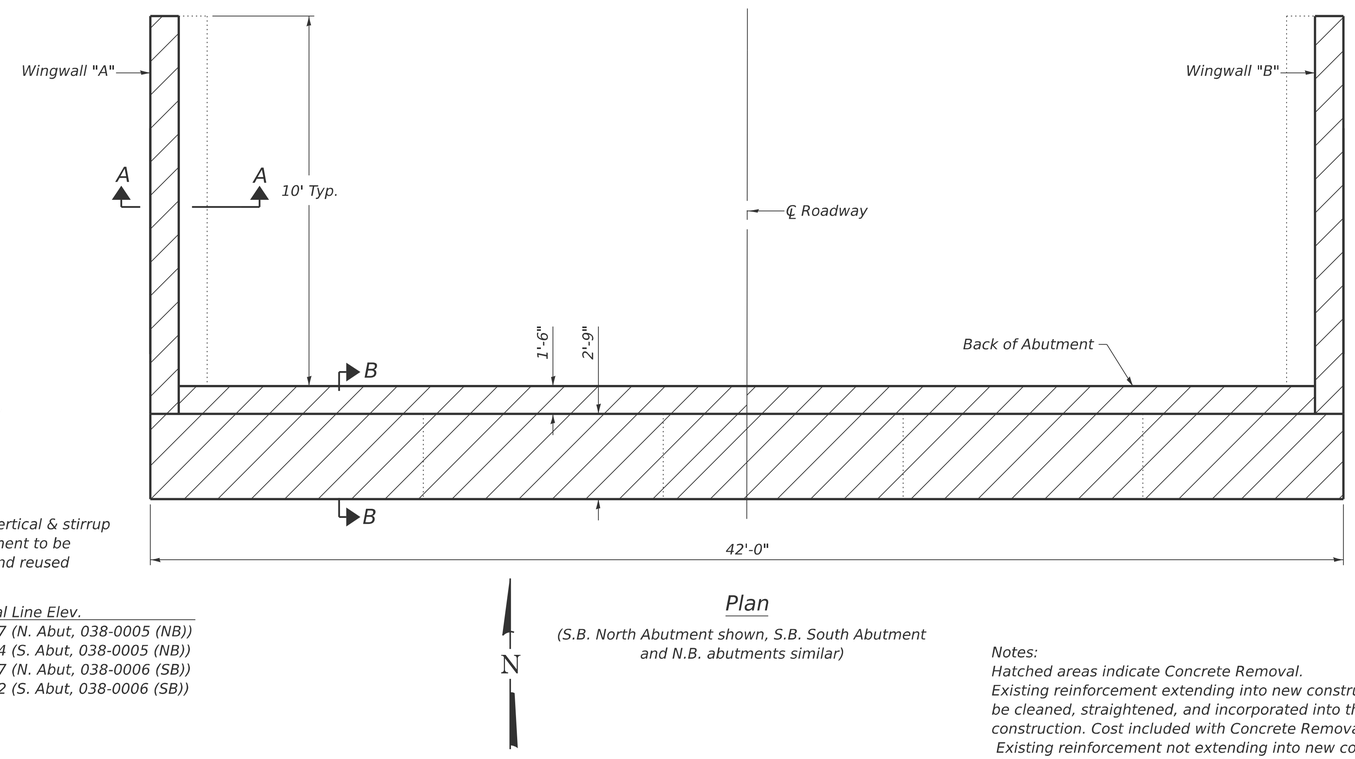

Plan

(S.B. North Abutment shown, S.B. South Abutment and N.B. abutments similar)

Notes:
Hatched areas indicate Concrete Removal.
Existing reinforcement extending into new construction shall be cleaned, straightened, and incorporated into the new construction. Cost included with Concrete Removal.
Existing reinforcement not extending into new construction shall be cut off flush and sealed with epoxy. Cost included with Concrete Removal.
Any reinforcement bars that are damaged during concrete removal operations shall be repaired or replaced using an approved bar splicer or anchorage system. Cost included with Concrete Removal.

Structure No. 038-0005
Bill of Material - 2 Abutments

Item	Unit	Total
Concrete Removal	Cu. Yd.	40.7

Structure No. 038-0006
Bill of Material - 2 Abutments

Item	Unit	Total
Concrete Removal	Cu. Yd.	40.7

MODEL: Default
FILE NAME: G:\Users\66501-05-IDOT-I-57 Structure Projects-TP&W RR and 2nd St\Survey D366M80\SN\038-0005_0006\Consultant_Data\Chamlin_2025\Design\0380005_0006-66M80-029-ABUT_CONC_REM.dgn

Chamlin & Associates

USER NAME = CHAMLIN	DESIGNED - PDF	REVISED -	
	DRAWN - LAG	REVISED -	
	CHECKED - JLS	REVISED -	
PLOT DATE = 2/27/2026	DATE - 04/21/2025	REVISED -	

STATE OF ILLINOIS
DEPARTMENT OF TRANSPORTATION

ABUTMENT CONCRETE REMOVAL
STRUCTURE NO. 038-0005 (NB) & 038-0006 (SB)

SCALE: | SHEET 29 OF 39 SHEETS | STA. | TO STA.

F.A.I. RTE.	SECTION	COUNTY	TOTAL SHEETS	SHEET NO.
57	(38-4,38-5)BR,D,CR	IROQUOIS	437	214
		CONTRACT NO. 66M80		
		ILLINOIS	FED. AID PROJECT	

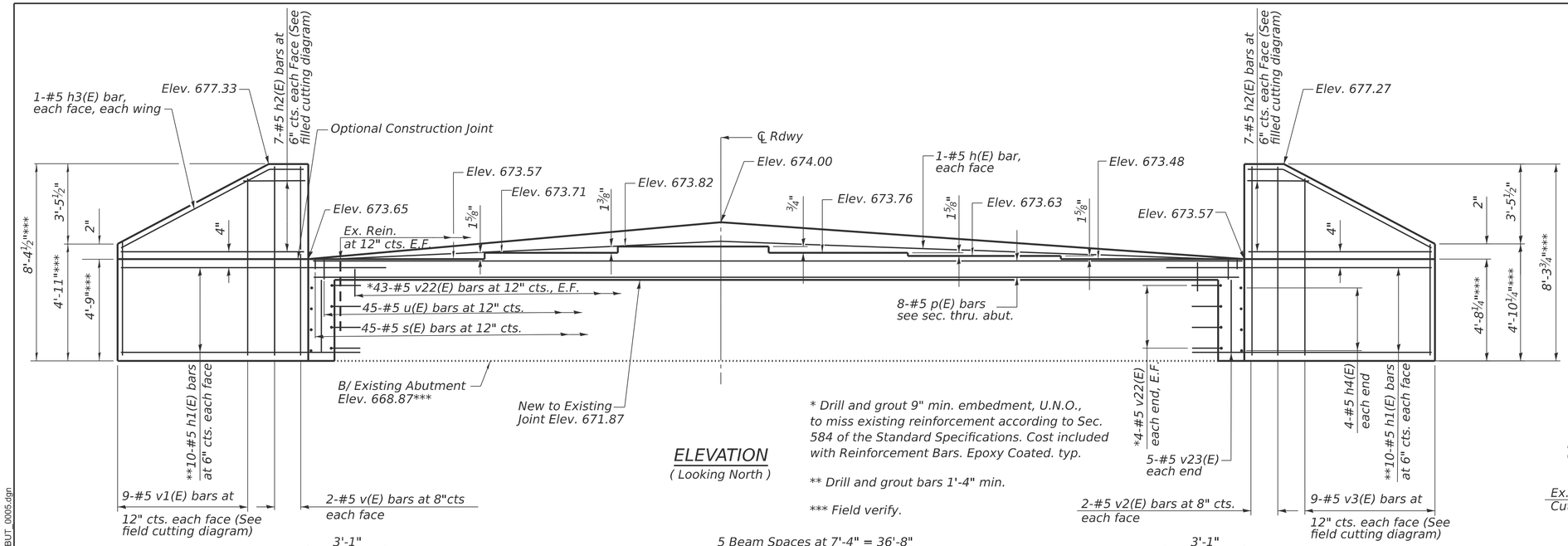

ELEVATION

(Looking North)

* Drill and grout 9" min. embedment, U.N.O., to miss existing reinforcement according to Sec. 584 of the Standard Specifications. Cost included with Reinforcement Bars. Epoxy Coated. typ.

** Drill and grout bars 1'-4" min.

*** Field verify.

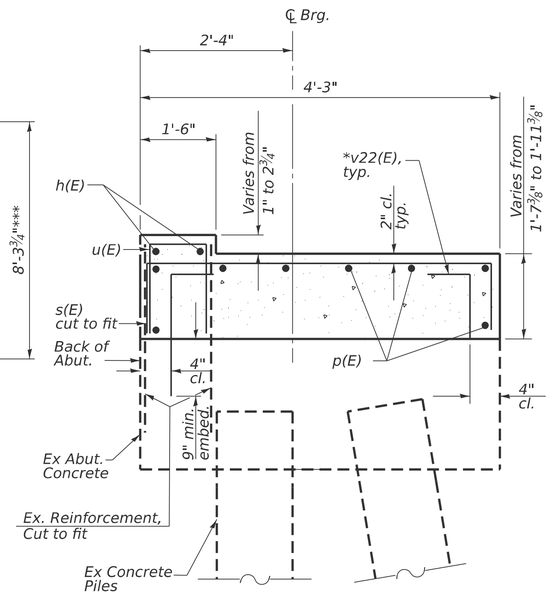

SEC. THRU ABUT.

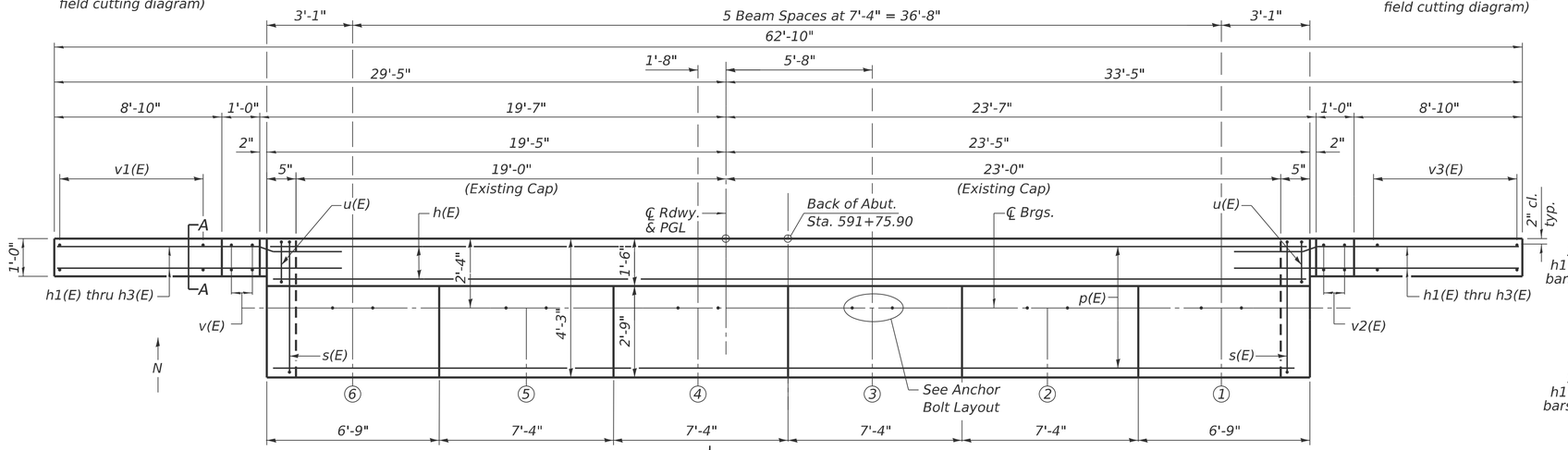

PLAN

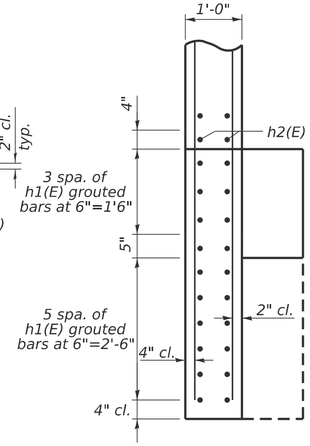

SECTION A-A

(Opposite Wing Similar)

BILL OF MATERIAL

Bar	No.	Size	Length	Shape
h(E)	2	#5	42'-6"	
h1(E)	40	#5	11'-7"	
h2(E)	14	#5	12'-0"	
h3(E)	4	#5	10'-1"	
h4(E)	8	#5	3'-11"	
p(E)	8	#5	42'-6"	
s(E)	45	#5	7'-1"	
u(E)	45	#5	3'-8"	
v(E)	4	#5	8'-0"	
v1(E)	9	#5	12'-7"	
v2(E)	4	#5	7'-11"	
v3(E)	9	#5	12'-5"	
v22(E)	102	#5	3'-2"	
v23(E)	10	#5	3'-8"	
Structure Excavation		Cu. Yd.	79.1	
Concrete Structures		Cu. Yd.	17.9	
Reinforcement Bars, Epoxy Coated		Pound	2,360	

Notes:
Space reinforcement in cap to miss anchor bolts.
Pour steps monolithically with cap.
E.F. = each face

Existing Reinforcement to be cleaned, straightened and incorporated into new construction. Cost included with concrete removal

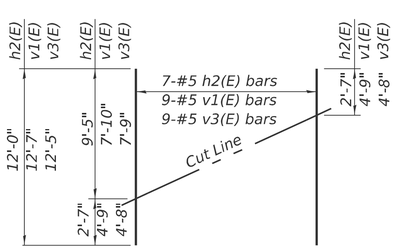

FIELD CUTTING DIAGRAM

Order h2(E), v1(E) and v3(E) full length. Cut as shown and use remainder of bars in opposite face.

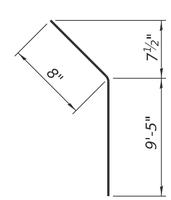

BAR h3(E)

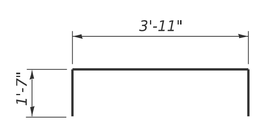

BAR s(E)

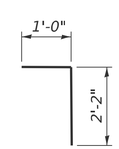

BAR v22(E)

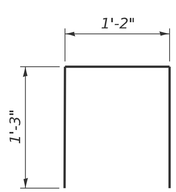

BAR u(E)

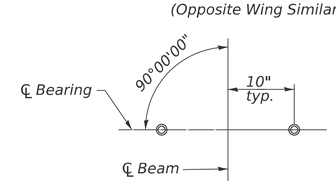

ANCHOR BOLT LAYOUT

AI-SB-0

4-4-2025

MODEL: Default
FILE NAME: G:\Users\6\66501-05-IDOT-I-57 Structure Projects-TP&W RR and 2nd St\Survey D366M80\SN\038-0005_0006\Consultant_Data\Chamlin_2025\Design\0380005_0006-66M80-030-N_ABUT_0005.dgn

Chamlin & Associates

USER NAME = CHAMLIN	DESIGNED - PDF	REVISED -	
	DRAWN - LAG	REVISED -	
	CHECKED - JLS	REVISED -	
PLOT DATE = 2/27/2026	DATE - 04/21/2025	REVISED -	

STATE OF ILLINOIS
DEPARTMENT OF TRANSPORTATION

NORTH ABUTMENT
STRUCTURE NO. 038-0005 (NB)

SCALE: | SHEET 30 OF 39 SHEETS | STA. | TO STA.

F.A.I. RTE.	SECTION	COUNTY	TOTAL SHEETS	SHEET NO.
57	(38-4,38-5)BR,D,CR	IROQUOIS	437	215
		CONTRACT NO. 66M80		
		ILLINOIS	FED. AID PROJECT	

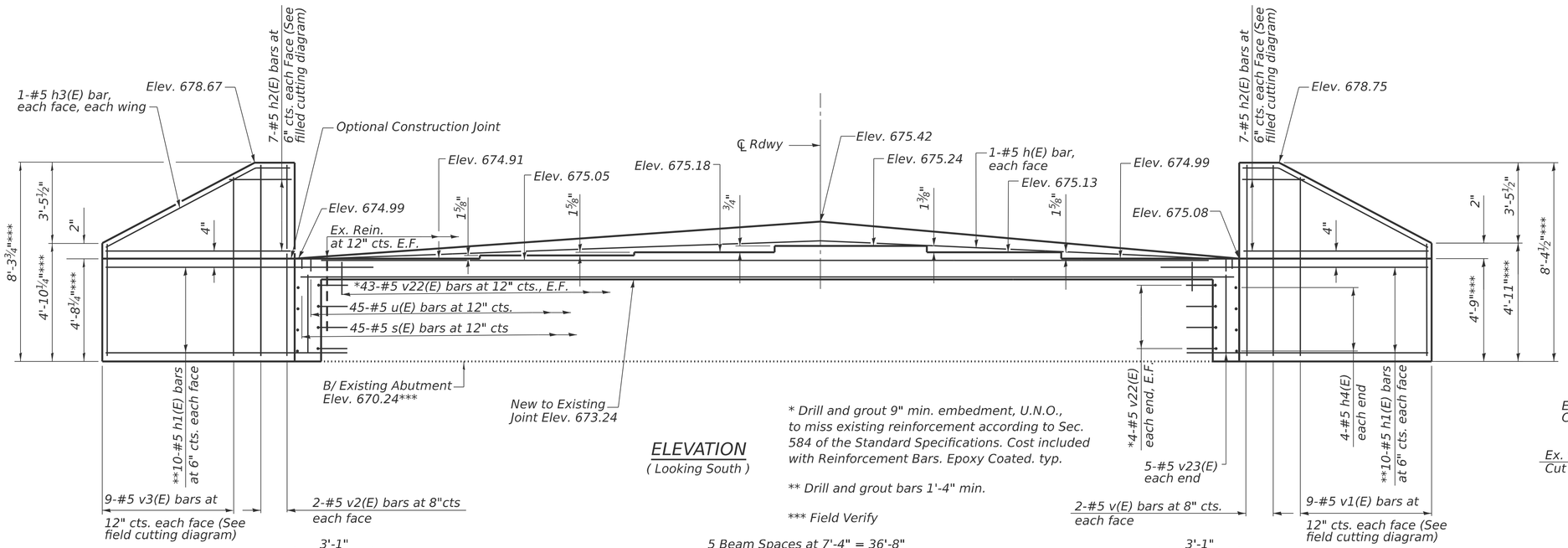

ELEVATION

(Looking South)

* Drill and grout 9" min. embedment, U.N.O., to miss existing reinforcement according to Sec. 584 of the Standard Specifications. Cost included with Reinforcement Bars. Epoxy Coated. typ.

** Drill and grout bars 1'-4" min.

*** Field Verify

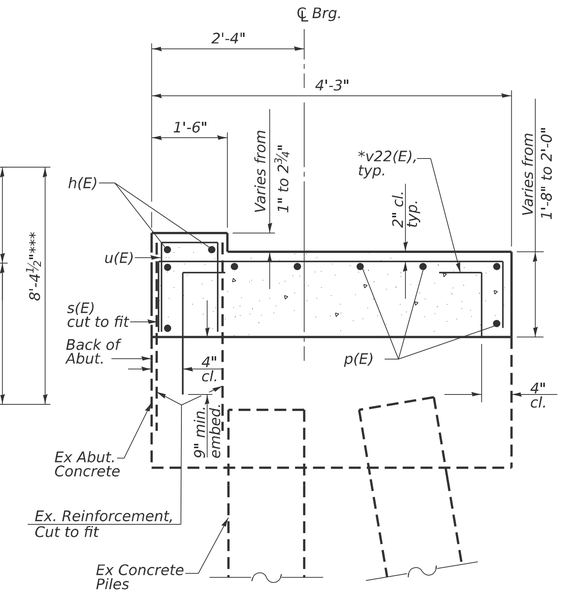

SEC. THRU ABUT.

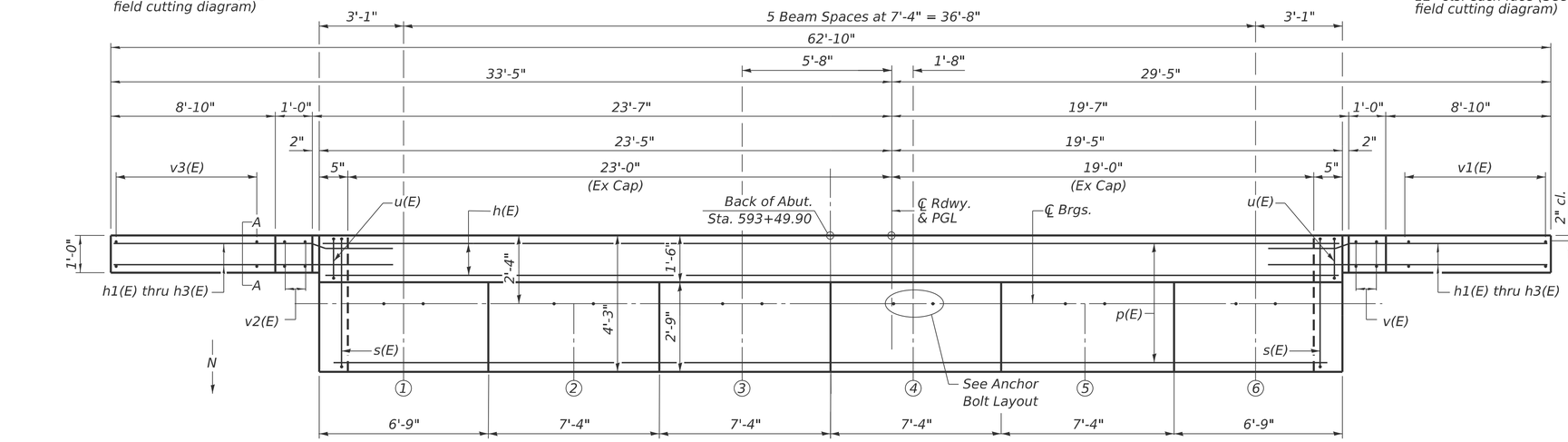

PLAN

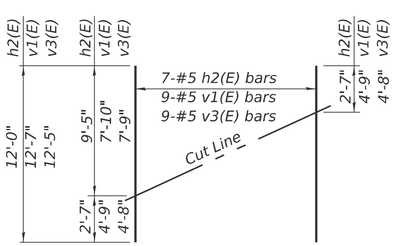

FIELD CUTTING DIAGRAM

Order h2(E), v1(E) and v3(E) full length. Cut as shown and use remainder of bars in opposite face.

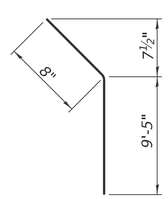

BAR h3(E)

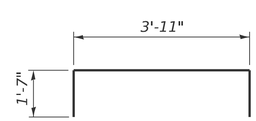

BAR s(E)

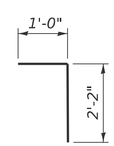

BAR v22(E)

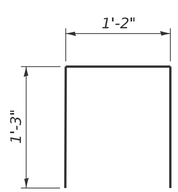

BAR u(E)

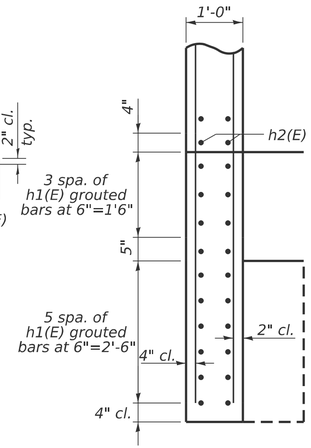

SECTION A-A

(Opposite Wing Similar)

BILL OF MATERIAL

Bar	No.	Size	Length	Shape
h(E)	2	#5	42'-6"	
h1(E)	40	#5	11'-7"	
h2(E)	14	#5	12'-0"	
h3(E)	4	#5	10'-1"	
h4(E)	8	#5	3'-11"	
p(E)	8	#5	42'-6"	
s(E)	45	#5	7'-1"	
u(E)	45	#5	3'-8"	
v(E)	4	#5	8'-0"	
v1(E)	9	#5	12'-7"	
v2(E)	4	#5	7'-11"	
v3(E)	9	#5	12'-5"	
v22(E)	102	#5	3'-2"	
v23(E)	10	#5	3'-8"	
Structure Excavation			Cu. Yd.	79.1
Concrete Structures			Cu. Yd.	18.2
Reinforcement Bars, Epoxy Coated			Pound	2,360

Notes:
Space reinforcement in cap to miss anchor bolts.
Pour steps monolithically with cap.
E.F. = each face

Existing Reinforcement to be cleaned, straightened and incorporated into new construction. Cost included with concrete removal

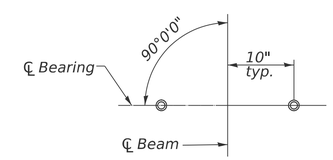

ANCHOR BOLT LAYOUT

AI-SB-0 4-4-2025

MODEL: Default
FILE NAME: G:\Users\6\66501-05-IDOT-I-57 Structure Projects-TP&W RR and 2nd St\Survey D36M80\SN038-0005_0006\Consultant_Data\Chamlin 2025\Design\0380005_0006-66M80-031-S_ABUT_0005.dgn

Chamlin & Associates

USER NAME = CHAMLIN	DESIGNED - PDF	REVISED -	
	DRAWN - LAG	REVISED -	
	CHECKED - JLS	REVISED -	
PLOT DATE = 2/27/2026	DATE - 04/21/2025	REVISED -	

STATE OF ILLINOIS
DEPARTMENT OF TRANSPORTATION

SOUTH ABUTMENT
STRUCTURE NO. 038-0005 (NB)

SCALE: SHEET 31 OF 39 SHEETS STA. TO STA.

F.A.I. RTE.	SECTION	COUNTY	TOTAL SHEETS	SHEET NO.
57	(38-4,38-5)BR,D,CR	IROQUOIS	437	216

CONTRACT NO. 66M80

ILLINOIS | FED. AID PROJECT

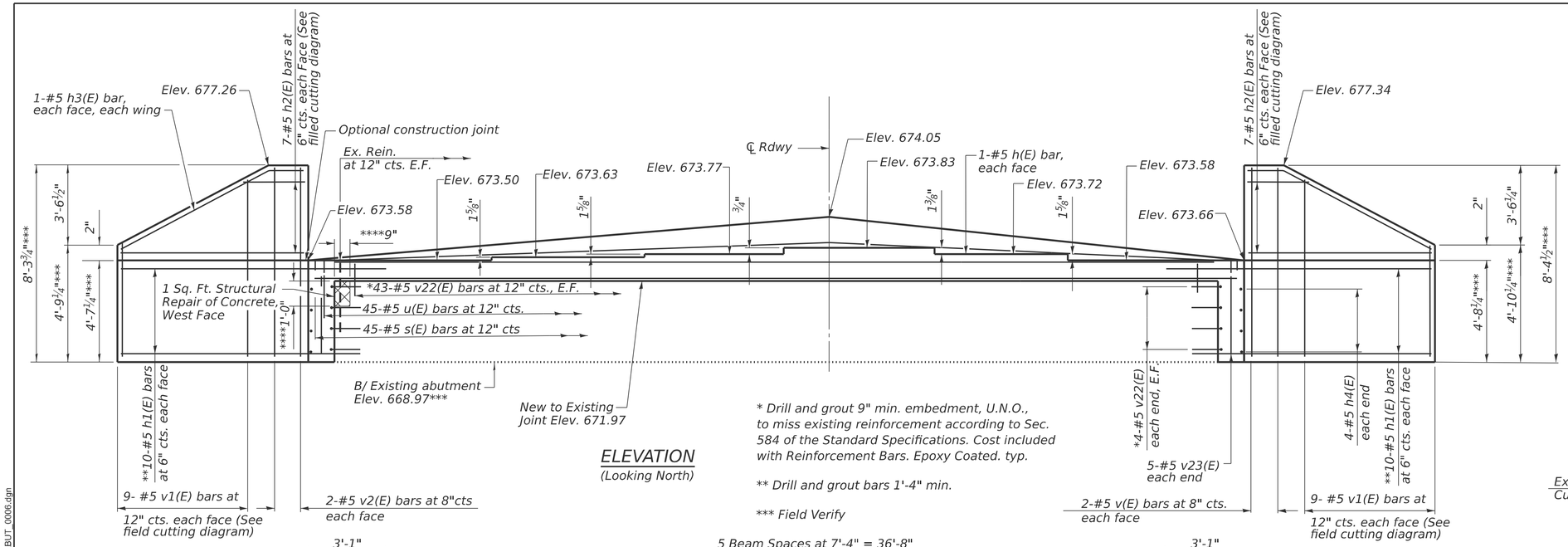

ELEVATION
(Looking North)

* Drill and grout 9" min. embedment, U.N.O., to miss existing reinforcement according to Sec. 584 of the Standard Specifications. Cost included with Reinforcement Bars. Epoxy Coated. typ.

** Drill and grout bars 1'-4" min.

*** Field Verify

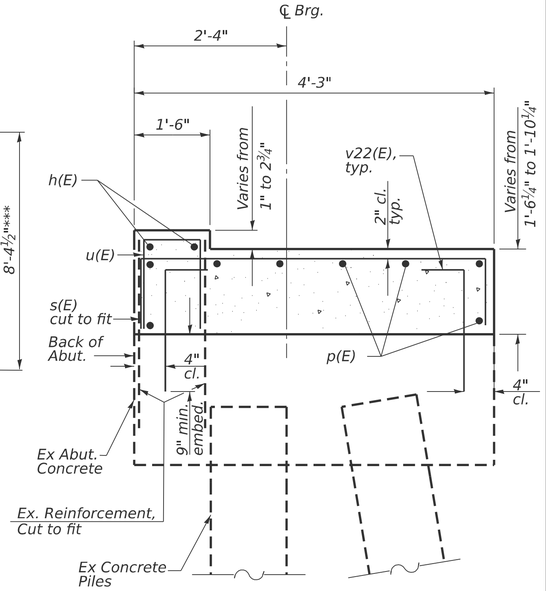

SEC. THRU ABUT.

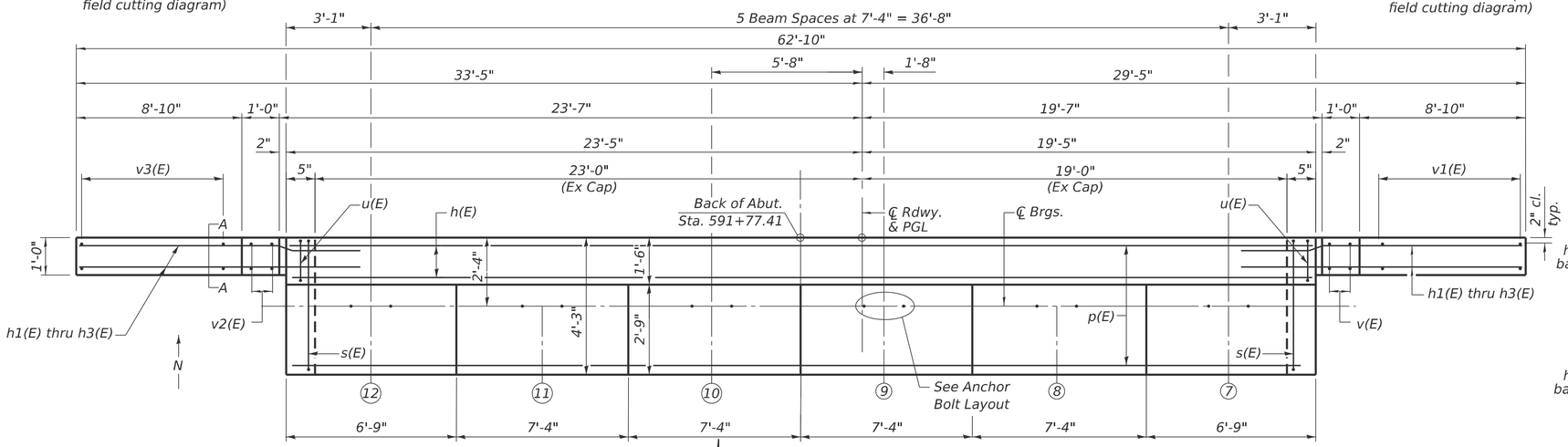

PLAN

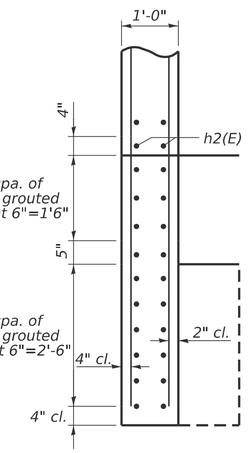

SECTION A-A
(Opposite Wing Similar)

BILL OF MATERIAL

Bar	No.	Size	Length	Shape
h(E)	2	#5	42'-6"	
h1(E)	40	#5	11'-7"	
h2(E)	14	#5	12'-0"	
h3(E)	4	#5	10'-1"	
h4(E)	8	#5	3'-11"	
p(E)	8	#5	42'-6"	
s(E)	45	#5	7'-1"	
u(E)	45	#5	3'-8"	
v(E)	4	#5	8'-0"	
v1(E)	9	#5	12'-7"	
v2(E)	4	#5	7'-11"	
v3(E)	9	#5	12'-5"	
v22(E)	102	#5	3'-2"	
v23(E)	10	#5	3'-8"	
Structure Excavation			Cu. Yd.	79.1
Concrete Structures			Cu. Yd.	17.3
Reinforcement Bars, Epoxy Coated			Pound	2,360
Structural Repair of Concrete (depth equal to or less than 5 inches)			Sq. Ft.	2

Structural Repair of Concrete (depth equal to or less than 5 inches)

**** Indicates South Face

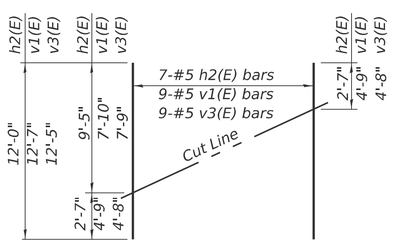

FIELD CUTTING DIAGRAM

Order h2(E), v1(E) and v3(E) full length. Cut as shown and use remainder of bars in opposite face.

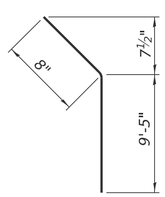

BAR h3(E)

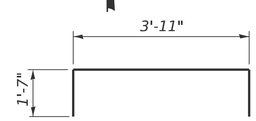

BAR s(E)

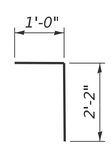

BAR v22(E)

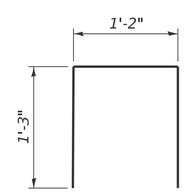

BAR u(E)

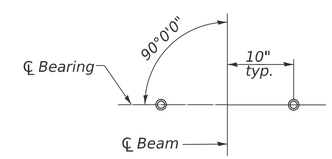

ANCHOR BOLT LAYOUT

Notes:
Space reinforcement in cap to miss anchor bolts.
Pour steps monolithically with cap.
E.F. = each face

Existing Reinforcement to be cleaned, straightened and incorporated into new construction. Cost included with concrete removal

AI-SB-0 4-4-2025

MODEL: Default
FILE NAME: G:\Users\6166501-05-IDOT-I-57 Structure Projects-T&W RR and 2nd St\Survey D368M80\SN038-0005_0006\Consultant_Data\Chamlin_2025\Design\0380005_0006-66M80-032-N_ABUT_0006.dgn

Chamlin & Associates

USER NAME = CHAMLIN	DESIGNED - PDF	REVISED -	
	DRAWN - LAG	REVISED -	
	CHECKED - JLS	REVISED -	
PLOT DATE = 2/27/2026	DATE - 04/21/2025	REVISED -	

STATE OF ILLINOIS
DEPARTMENT OF TRANSPORTATION

NORTH ABUTMENT
STRUCTURE NO. 038-0006 (SB)

SCALE: SHEET 32 OF 39 SHEETS STA. TO STA.

F.A.I. RTE.	SECTION	COUNTY	TOTAL SHEETS	SHEET NO.
57	(38-4,38-5)BR,D,CR	IROQUOIS	437	217
		CONTRACT NO. 66M80		
		ILLINOIS	FED. AID PROJECT	

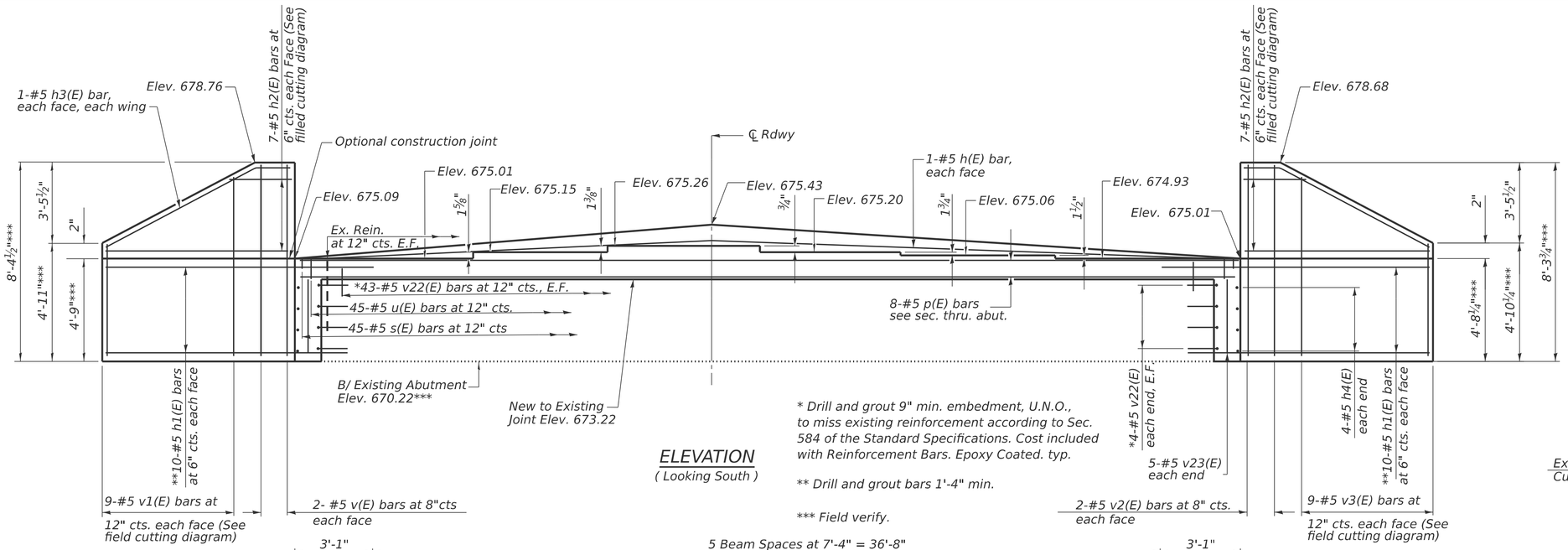

ELEVATION

(Looking South)

* Drill and grout 9" min. embedment, U.N.O., to miss existing reinforcement according to Sec. 584 of the Standard Specifications. Cost included with Reinforcement Bars. Epoxy Coated. typ.

** Drill and grout bars 1'-4" min.

*** Field verify.

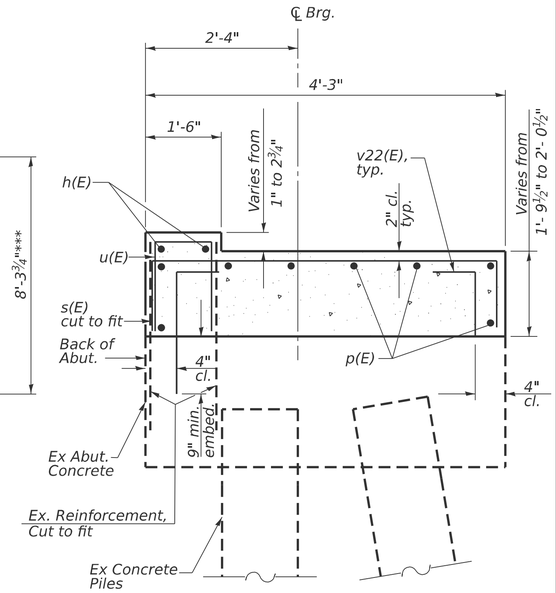

SEC. THRU ABUT.

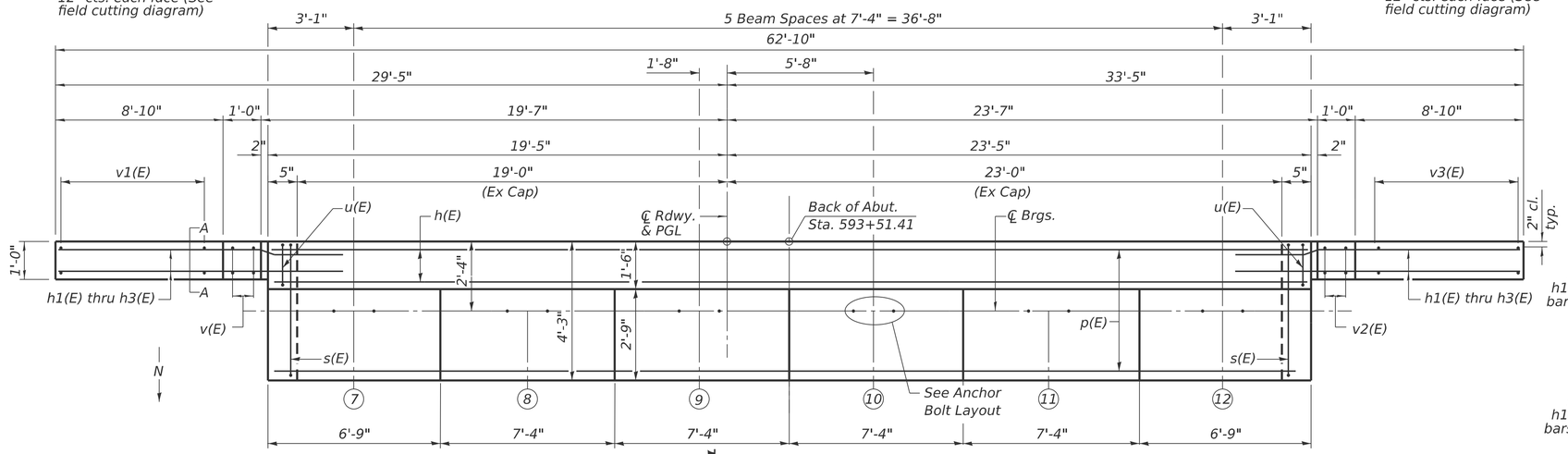

PLAN

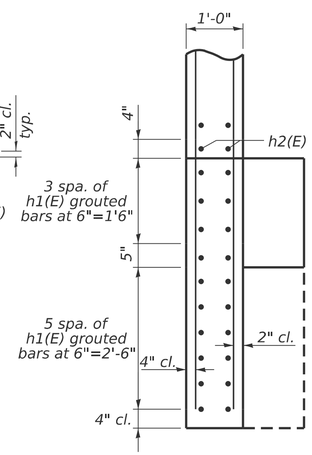

SECTION A-A

(Opposite Wing Similar)

BILL OF MATERIAL

Bar	No.	Size	Length	Shape
h(E)	2	#5	42'-6"	
h1(E)	40	#5	11'-7"	
h2(E)	14	#5	12'-0"	
h3(E)	4	#5	10'-1"	
h4(E)	8	#5	3'-11"	
p(E)	8	#5	42'-6"	
s(E)	45	#5	7'-1"	
u(E)	45	#5	3'-8"	
v(E)	4	#5	8'-0"	
v1(E)	9	#5	12'-7"	
v2(E)	4	#5	7'-11"	
v3(E)	9	#5	12'-5"	
v22(E)	102	#5	3'-2"	
v23(E)	10	#5	3'-8"	
Structure Excavation			Cu. Yd.	79.1
Concrete Structures			Cu. Yd.	18.5
Reinforcement Bars, Epoxy Coated			Pound	2,360

Notes:
Space reinforcement in cap to miss anchor bolts.
Pour steps monolithically with cap.
E.F. = each face

Existing Reinforcement to be cleaned, straightened and incorporated into new construction. Cost included with concrete removal

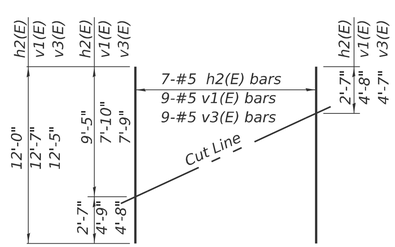

FIELD CUTTING DIAGRAM

Order h2(E), v1(E) and v3(E) full length. Cut as shown and use remainder of bars in opposite face.

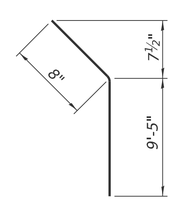

BAR h3(E)

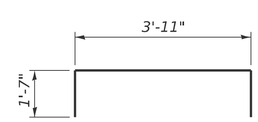

BAR s(E)

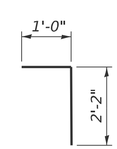

BAR v22(E)

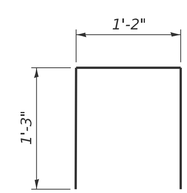

BAR u(E)

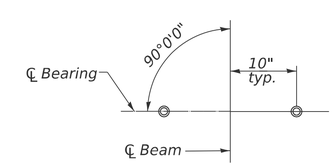

ANCHOR BOLT LAYOUT

AI-SB-0 4-4-2025

MODEL: Default
FILE NAME: G:\Users\6\66501-05-IDOT-I-57 Structure Projects-TP&W RR and 2nd St\Survey D366M80\SN\038-0005_0006\Consultant_Data\Chamlin_2025\Design\0380005_0006-66M80-033-S_ABUT_0006.dgn

Chamlin & Associates

USER NAME = CHAMLIN	DESIGNED - PDF	REVISED -	
	DRAWN - LAG	REVISED -	
	CHECKED - JLS	REVISED -	
PLOT DATE = 2/27/2026	DATE - 04/21/2025	REVISED -	

STATE OF ILLINOIS
DEPARTMENT OF TRANSPORTATION

SOUTH ABUTMENT
STRUCTURE NO. 038-0006 (SB)

SCALE: SHEET 33 OF 39 SHEETS STA. TO STA.

F.A.I. RTE.	SECTION	COUNTY	TOTAL SHEETS	SHEET NO.
57	(38-4,38-5)BR,D,CR	IROQUOIS	437	218
		CONTRACT NO. 66M80		
		ILLINOIS	FED. AID PROJECT	

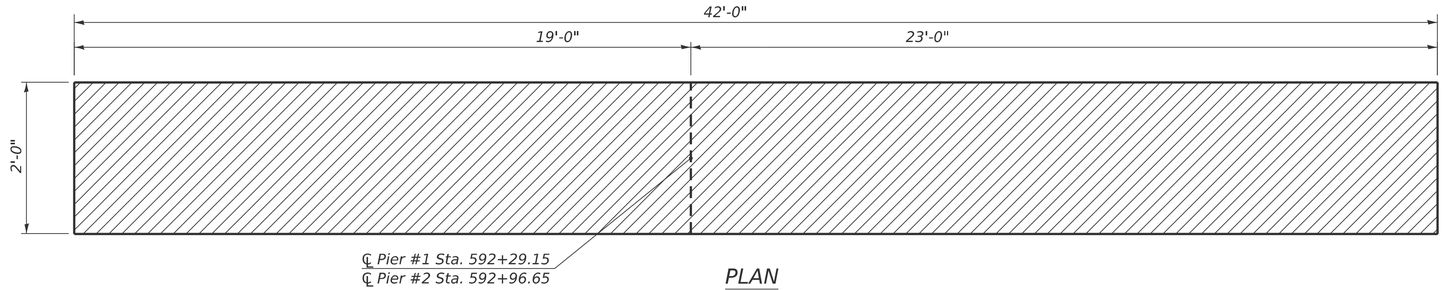

PLAN
(038-0005, Pier #1 and Pier #2)

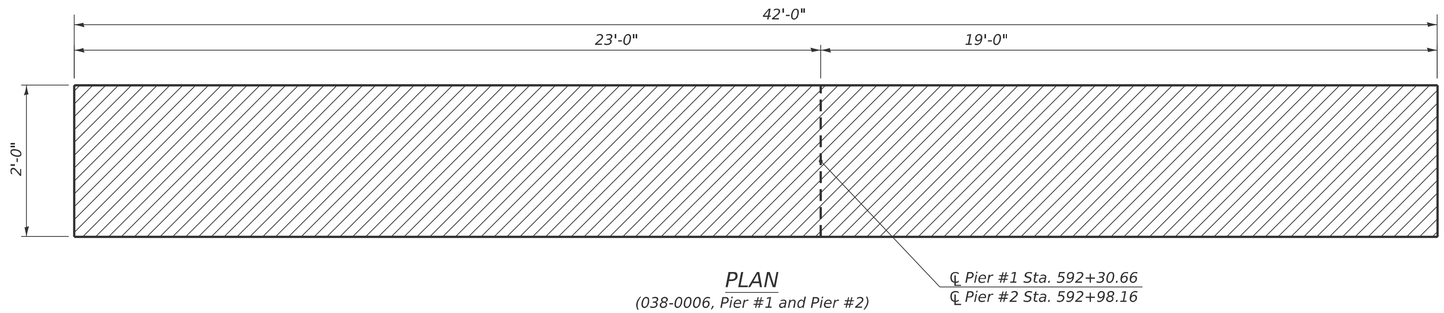

PLAN
(038-0006, Pier #1 and Pier #2)

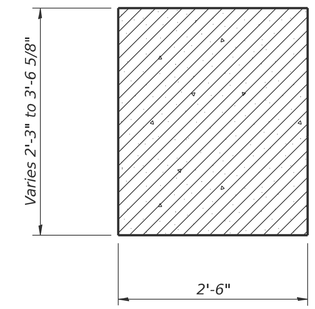

SECTION A-A

Concrete Removal

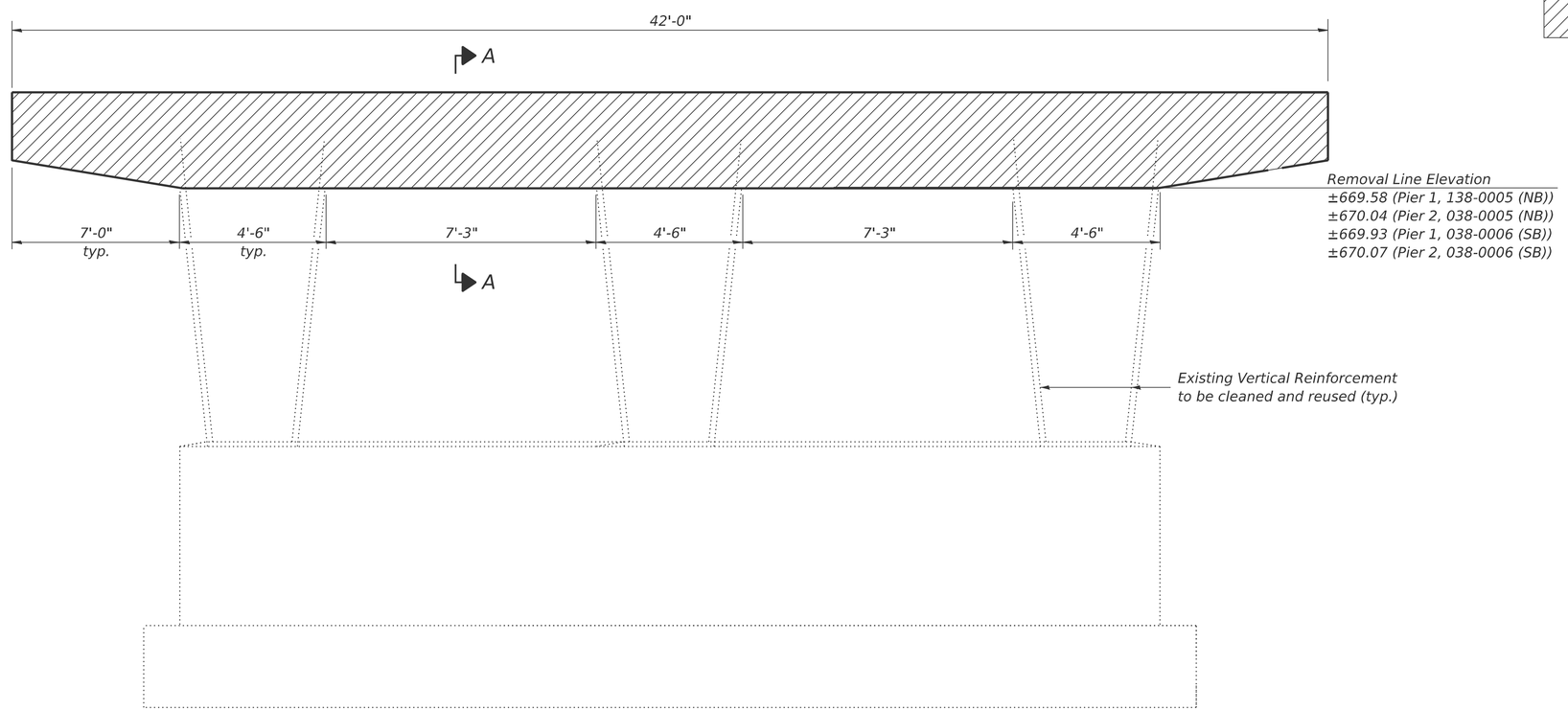

ELEVATION
(Typ.)

STRUCTURE NO. 038-0005
BILL OF MATERIAL-2 PIERS

ITEM	UNIT	TOTAL
Concrete Removal	Cu. Yd.	25.2

STRUCTURE NO. 038-0006
BILL OF MATERIAL-2 PIERS

ITEM	UNIT	TOTAL
Concrete Removal	Cu. Yd.	25.2

Notes:

Hatched areas indicate Concrete Removal.

Existing reinforcement extending into new construction shall be cleaned, straightened, and incorporated into new construction. Cost included with Concrete Removal.

Existing reinforcement not extending into new construction shall be cut off flush and sealed with epoxy. Cost included with Concrete Removal.

Any reinforcement bars that are damaged during concrete removal operations shall be repaired or replaced using an approved bar splicer or anchorage system. Cost included with Concrete Removal.

4-4-2025

MODEL: Default
FILE NAME: G:\Users\066501-05-IDOT-I-57 Structure Projects-TP&W RR and 2nd St\Survey D366M80\SN\038-0005_0006\Consultant_Data\Chamlin_2025\Design\0380005_0006-66M80-034-PIER_REM_AND_REP.dgn

Chamlin & Associates

USER NAME = CHAMLIN	DESIGNED - PDF	REVISED -	
	DRAWN - LAG	REVISED -	
	CHECKED - JLS	REVISED -	
PLOT DATE = 2/27/2026	DATE - 04/21/2025	REVISED -	

STATE OF ILLINOIS
DEPARTMENT OF TRANSPORTATION

PIER REMOVAL
STRUCTURE NO. 038-0005 (NB) & 038-0006 (SB)

SCALE: | SHEET 34 OF 39 SHEETS | STA. | TO STA.

F.A.I. RTE.	SECTION	COUNTY	TOTAL SHEETS	SHEET NO.
57	(38-4,38-5)BR,D,CR	IROQUOIS	437	219
		CONTRACT NO. 66M80		
		ILLINOIS	FED. AID PROJECT	

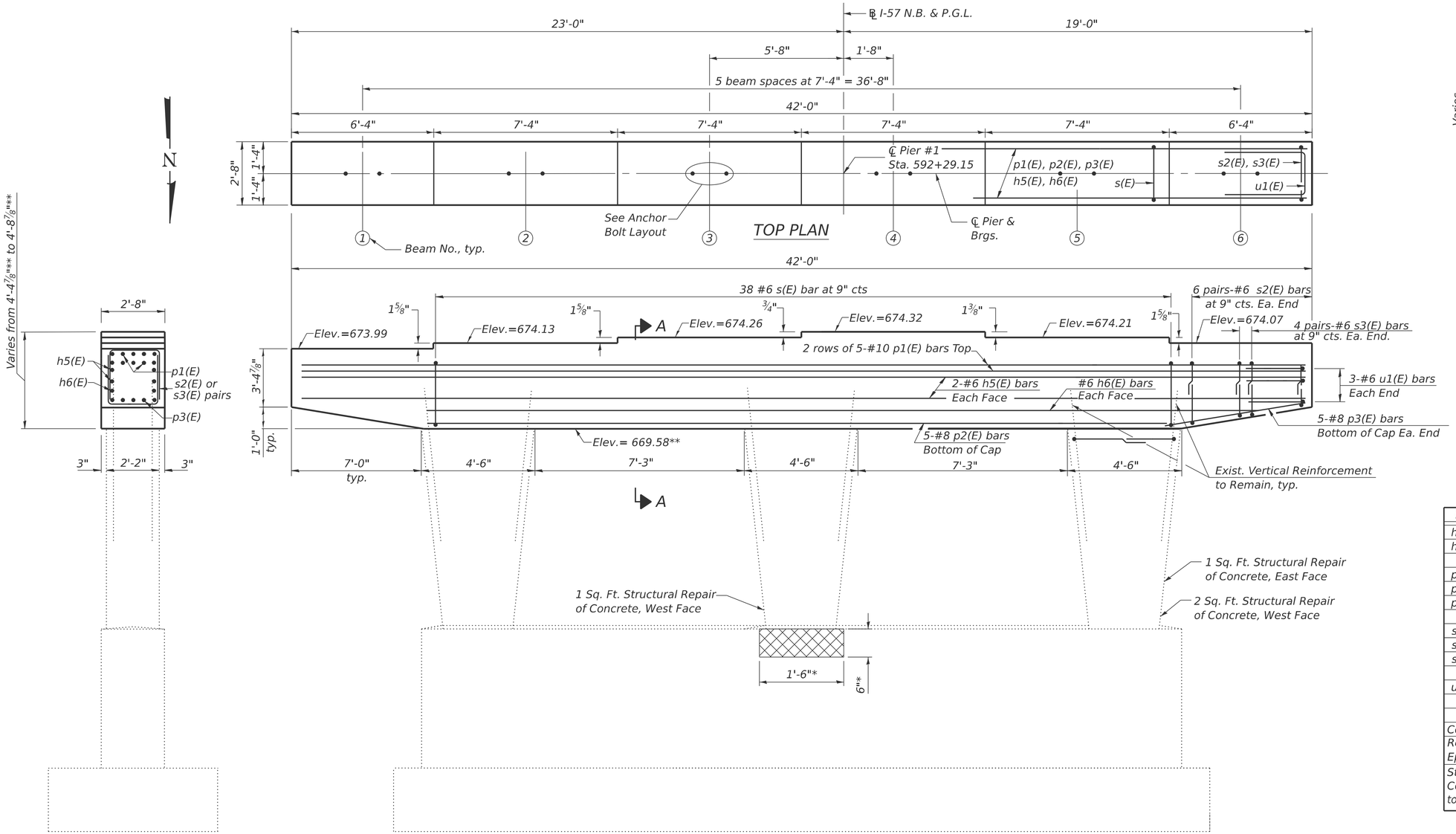

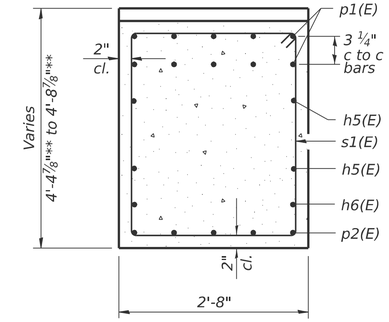

SECTION A-A

BILL OF MATERIAL

Bar	No.	Size	Length	Shape
h5(E)	4	#6	41'-8"	
h6(E)	2	#6	35'-8"	
p1(E)	10	#10	41'-8"	
p2(E)	5	#8	27'-8"	
p3(E)	10	#8	7'-0"	
s1(E)	38	#6	12'-10"	
s2(E)	24	#6	8'-0"	
s3(E)	16	#6	7'-2"	
u1(E)	6	#6	8'-6"	
Concrete Structures			Cu. Yd.	18.3
Reinforcement Bars, Epoxy Coated			Pound	3,980
Structural Repair of Concrete (depth equal to or less than 5 inches)			Sq. Ft.	5

Structural Repair of Concrete (depth equal to or less than 5 inches)

* Indicates South Face

** Field Verify

Notes:
Space reinforcement in cap to miss anchor bolts.

Pour steps monolithically with cap.

Existing Reinforcement shall be cleaned, straightened and incorporated into the new construction. Cost included with concrete removal

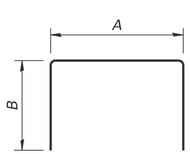

BARS s2(E) & s3(E)

A & B DIMENSIONS

Bar	A	B
s2(E)	2'-4"	2'-10"
s3(E)	2'-4"	2'-5"

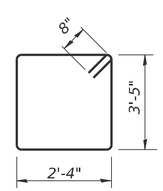

BAR s1(E)

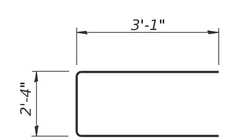

BAR u1(E)

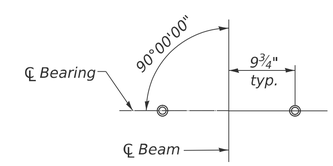

ANCHOR BOLT LAYOUT

P-5

4-4-2025

MODEL: Default
FILE NAME: G:\Users\66501-05-IDOT-I-57 Structure Projects-TP&W RR and 2nd St\Survey D366M80\SN\038-0005_0006\Consultant_Data\Chamlin_2025\Design\0380005_0006-66M80-035-PIER_1_DETS_0005.dgn

Chamlin & Associates

USER NAME = CHAMLIN	DESIGNED - PDF	REVISED -	
	DRAWN - LAG	REVISED -	
	CHECKED - JLS	REVISED -	
PLOT DATE = 2/27/2026	DATE - 04/21/2025	REVISED -	

STATE OF ILLINOIS
DEPARTMENT OF TRANSPORTATION

PIER 1 DETAILS
STRUCTURE NO. 038-0005 (NB)

SCALE: SHEET 35 OF 39 SHEETS STA. TO STA.

F.A.I. RTE.	SECTION	COUNTY	TOTAL SHEETS	SHEET NO.
57	(38-4,38-5)BR,D,CR	IROQUOIS	437	220
		CONTRACT NO. 66M80		
		ILLINOIS	FED. AID PROJECT	

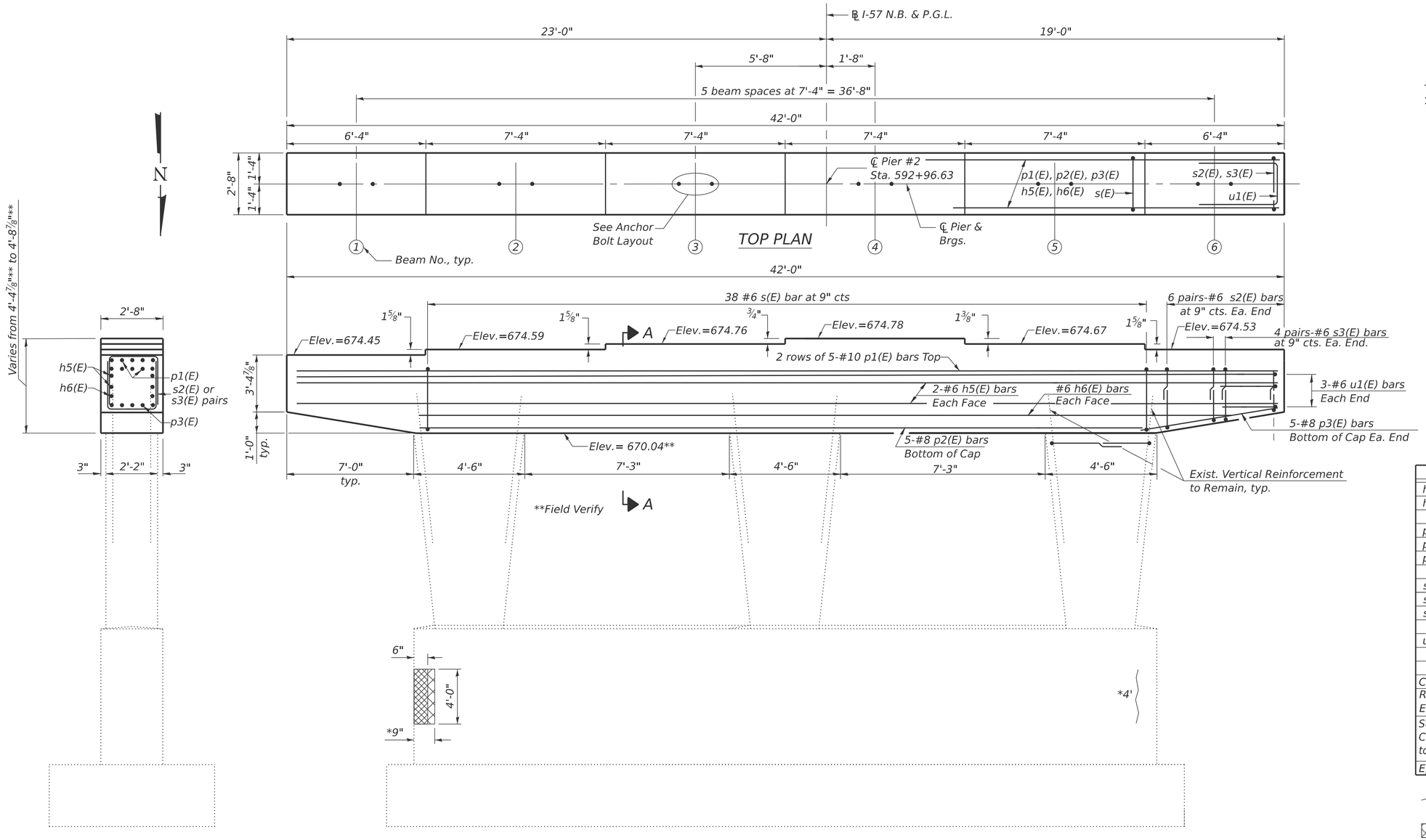

END VIEW

ELEVATION
(North Face)

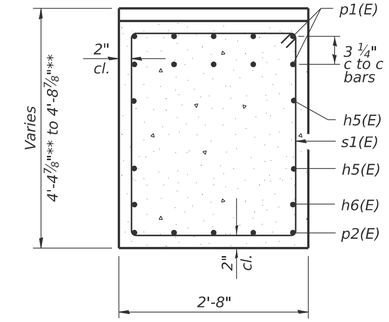

SECTION A-A

BILL OF MATERIAL

Bar	No.	Size	Length	Shape
h5(E)	4	#6	41'-8"	
h6(E)	2	#6	35'-8"	
p1(E)	10	#10	41'-8"	
p2(E)	5	#8	27'-8"	
p3(E)	10	#8	7'-0"	
s1(E)	38	#6	12'-10"	
s2(E)	24	#6	8'-0"	
s3(E)	16	#6	7'-2"	
u1(E)	6	#6	8'-6"	
Concrete Structures			Cu. Yd.	18.3
Reinforcement Bars, Epoxy Coated			Pound	3,980
Structural Repair of Concrete (depth equal to or less than 5 inches)			Sq. Ft.	5
Epoxy Crack Injection			Foot	4

Epoxy Crack Injection

Structural Repair of Concrete (depth equal to or less than 5 inches)

* Indicates South Face

** Field Verify

Notes:
Space reinforcement in cap to miss anchor bolts.

Pour steps monolithically with cap.

Existing Reinforcement shall be cleaned, straightened and incorporated into the new construction. Cost included with concrete removal

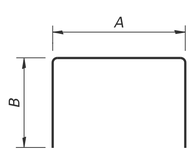

BARS s2(E) & s3(E)

A & B DIMENSIONS

Bar	A	B
s2(E)	2'-4"	2'-10"
s3(E)	2'-4"	2'-5"

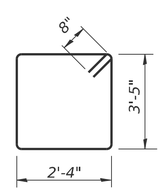

BAR s1(E)

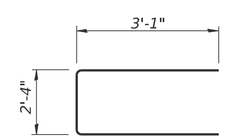

BAR u1(E)

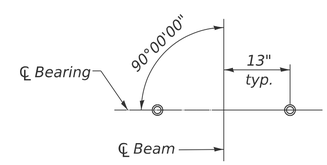

ANCHOR BOLT LAYOUT

P-5

4-4-2025

MODEL: Default
FILE NAME: G:\Users\6\66501-05-IDOT-I-57 Structure Projects-TP&W RR and 2nd St\Survey D386\X80\SN038-0005_0006\Consultant_Data\Chamlin_2025\Design\0380005_0006-66M80-036-PIER_2_DETS_0005.dgn

Chamlin & Associates

USER NAME = CHAMLIN	DESIGNED - PDF	REVISED -	
	DRAWN - LAG	REVISED -	
	CHECKED - JLS	REVISED -	
PLOT DATE = 2/27/2026	DATE - 04/21/2025	REVISED -	

STATE OF ILLINOIS
DEPARTMENT OF TRANSPORTATION

PIER 2 DETAILS
STRUCTURE NO. 038-0005 (NB)

SCALE: SHEET 36 OF 39 SHEETS STA. TO STA.

F.A.I. RTE.	SECTION	COUNTY	TOTAL SHEETS	SHEET NO.
57	(38-4,38-5)BR,D,CR	IROQUOIS	437	221
		CONTRACT NO. 66M80		
		ILLINOIS FED. AID PROJECT		

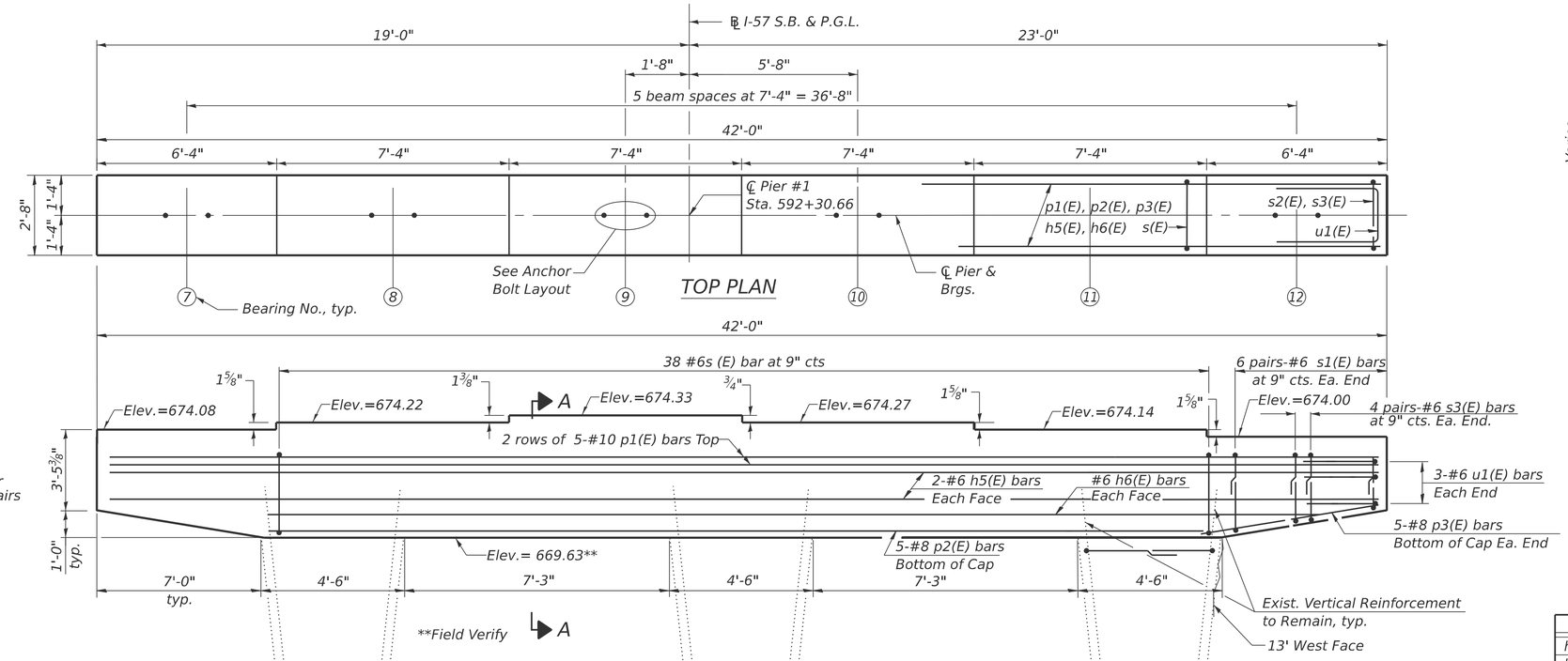

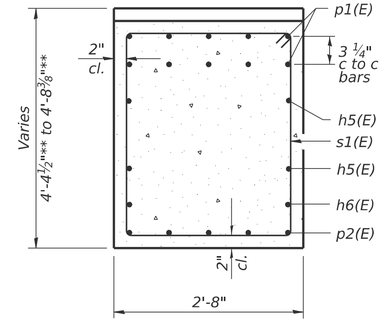

SECTION A-A

BILL OF MATERIAL

Bar	No.	Size	Length	Shape
h5(E)	4	#6	41'-8"	
h6(E)	2	#6	35'-8"	
p1(E)	10	#10	41'-8"	
p2(E)	5	#8	27'-8"	
p3(E)	10	#8	7'-0"	
s1(E)	38	#6	12'-10"	
s2(E)	24	#6	8'-0"	
s3(E)	16	#6	7'-2"	
u1(E)	6	#6	8'-6"	
Concrete Structures			Cu. Yd.	18.2
Reinforcement Bars, Epoxy Coated			Pound	3,980
Structural Repair of Concrete (depth equal to or less than 5 inches)			Sq. Ft.	23
Epoxy Crack Injection			Foot	13

Epoxy Crack Injection

Structural Repair of Concrete (depth equal to or less than 5 inches)

* Indicates South Face

** Field Verify

Notes:
Space reinforcement in cap to miss anchor bolts.

Pour steps monolithically with cap.

Existing Reinforcement shall be cleaned, straightened and incorporated into the new construction. Cost included with concrete removal

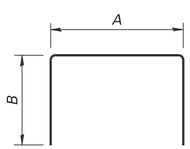

BARS s2(E) & s3(E)

A & B DIMENSIONS

Bar	A	B
s2(E)	2'-4"	2'-10"
s3(E)	2'-4"	2'-5"

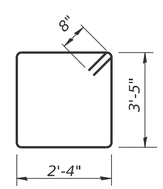

BAR s1(E)

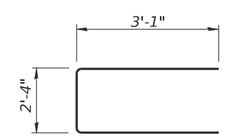

BAR u1(E)

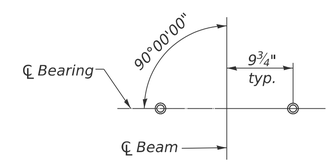

ANCHOR BOLT LAYOUT

P-5

4-4-2025

MODEL: Default
FILE NAME: G:\Users\6\66501-05-IDOT-I-57 Structure Projects-TP&W RR and 2nd St\Survey D36M80\SN038-0005_0006\Consultant_Data\Chamlin_2025\Design\0380005_0006-66M80-037-PIER_1_DETS_0006.dgn

Chamlin & Associates

USER NAME = CHAMLIN	DESIGNED - PDF	REVISED -	
	DRAWN - LAG	REVISED -	
	CHECKED - JLS	REVISED -	
PLOT DATE = 2/27/2026	DATE - 04/21/2025	REVISED -	

STATE OF ILLINOIS
DEPARTMENT OF TRANSPORTATION

PIER 1 DETAILS
STRUCTURE NO. 038-0006 (SB)

SCALE: | SHEET 37 OF 39 SHEETS | STA. | TO STA.

F.A.I. RTE.	SECTION	COUNTY	TOTAL SHEETS	SHEET NO.
57	(38-4,38-5)BR,D,CR	IROQUOIS	437	222
		CONTRACT NO. 66M80		
		ILLINOIS	FED. AID PROJECT	

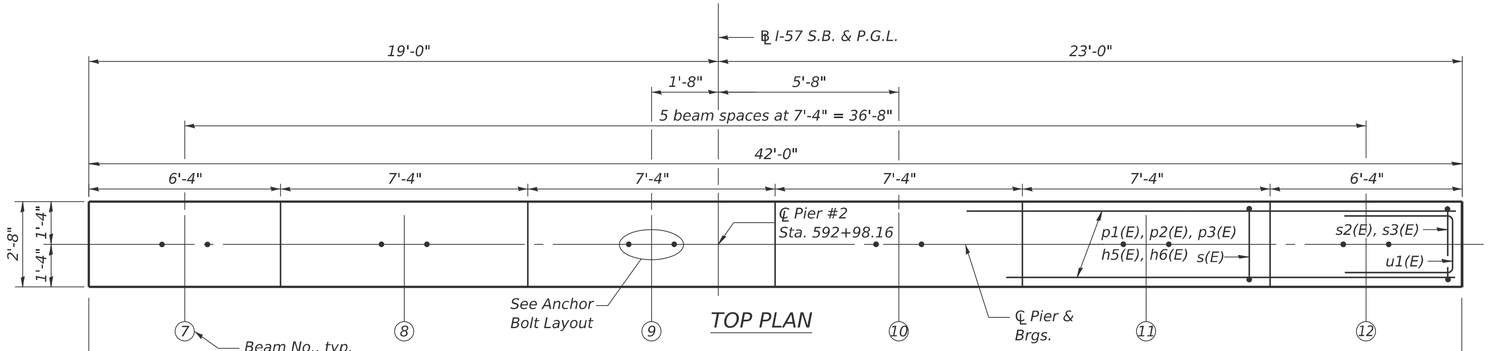

TOP PLAN

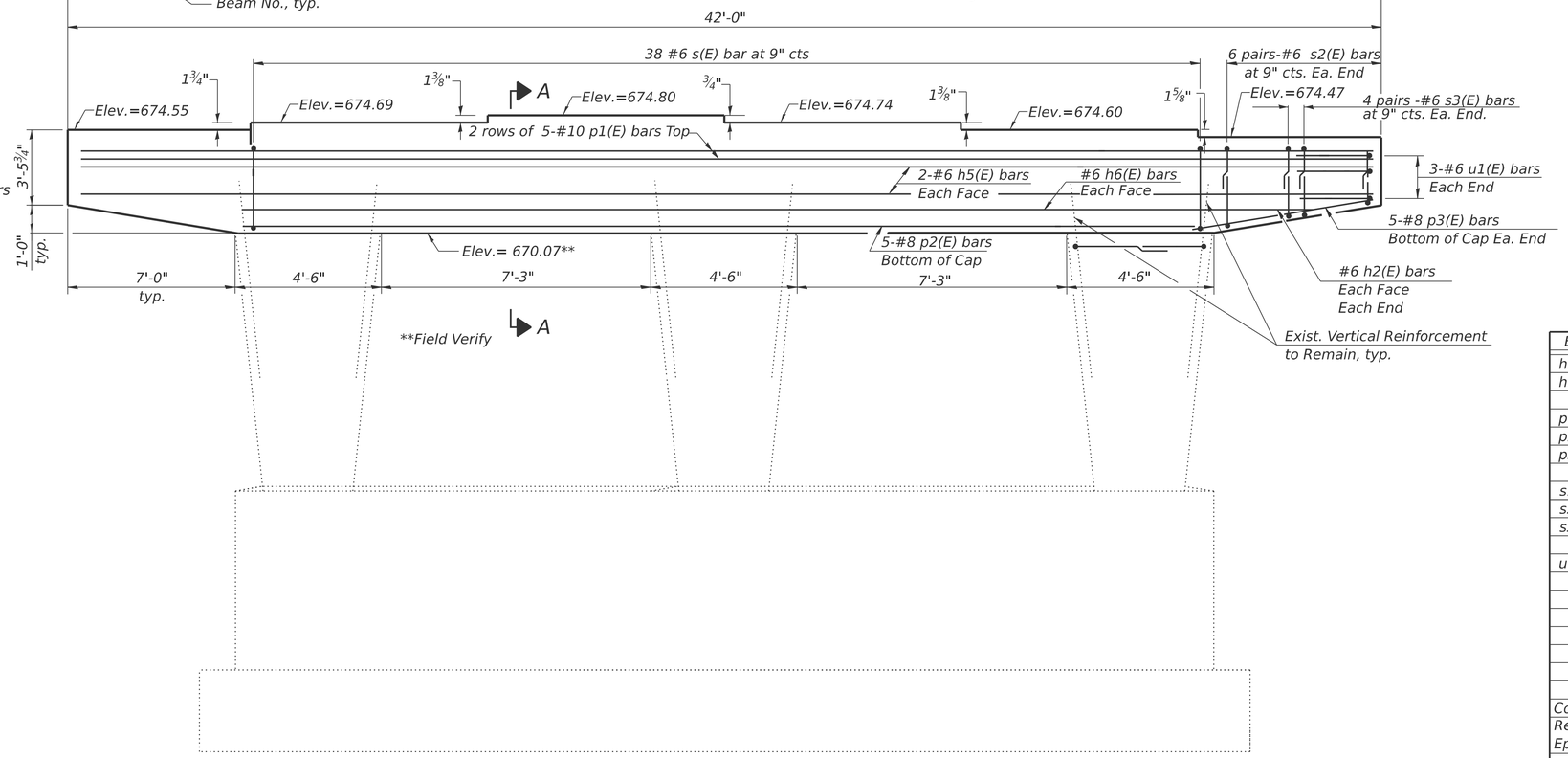

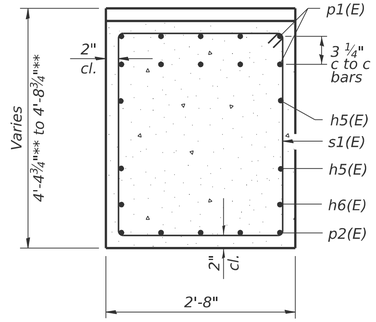

SECTION A-A

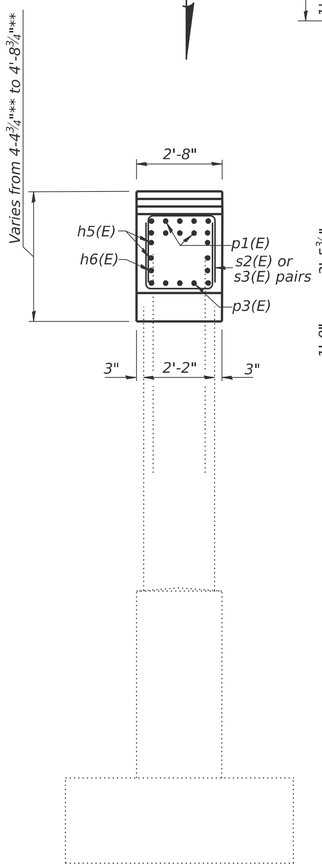

END VIEW

ELEVATION

(North Face)

BILL OF MATERIAL

Bar	No.	Size	Length	Shape
h5(E)	4	#6	41'-8"	
h6(E)	2	#6	35'-8"	
p1(E)	10	#10	41'-8"	
p2(E)	5	#8	27'-8"	
p3(E)	10	#8	7'-0"	
s1(E)	38	#6	12'-10"	
s2(E)	24	#6	8'-0"	
s3(E)	16	#6	7'-2"	
u1(E)	6	#6	8'-6"	
Concrete Structures			Cu. Yd.	18.2
Reinforcement Bars, Epoxy Coated			Pound	3,980

** Field Verify

Notes:
Space reinforcement in cap to miss anchor bolts.

Pour steps monolithically with cap.

Existing Reinforcement shall be cleaned, straightened and incorporated into the new construction. Cost included with concrete removal

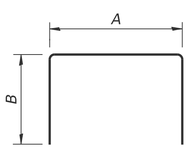

BARS s2(E) & s3(E)

A & B DIMENSIONS

Bar	A	B
s2(E)	2'-4"	2'-10"
s3(E)	2'-4"	2'-5"

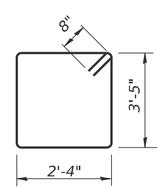

BAR s1(E)

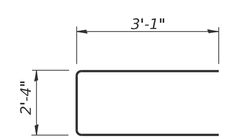

BAR u1(E)

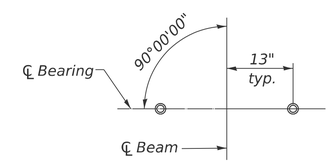

ANCHOR BOLT LAYOUT

P-5

4-4-2025

MODEL: Default
FILE NAME: G:\Users\6\66501-05-IDOT-I-57 Structure Projects-TP&W RR and 2nd St\Survey D366M80\SN\38-0005_0006\Consultant_Data\Chamlin_2025\Design\0380005_0006-66M80-038-PIER_2_DETS_0006.dgn

Chamlin & Associates

USER NAME = CHAMLIN	DESIGNED - PDF	REVISED -	
	DRAWN - LAG	REVISED -	
	CHECKED - JLS	REVISED -	
PLOT DATE = 2/27/2026	DATE - 04/21/2025	REVISED -	

STATE OF ILLINOIS
DEPARTMENT OF TRANSPORTATION

PIER 2 DETAILS
STRUCTURE NO. 038-0006 (SB)

SCALE: SHEET 38 OF 39 SHEETS STA. TO STA.

F.A.I. RTE.	SECTION	COUNTY	TOTAL SHEETS	SHEET NO.
57	(38-4,38-5)BR,D,CR	IROQUOIS	437	223
		CONTRACT NO. 66M80		
		ILLINOIS FED. AID PROJECT		

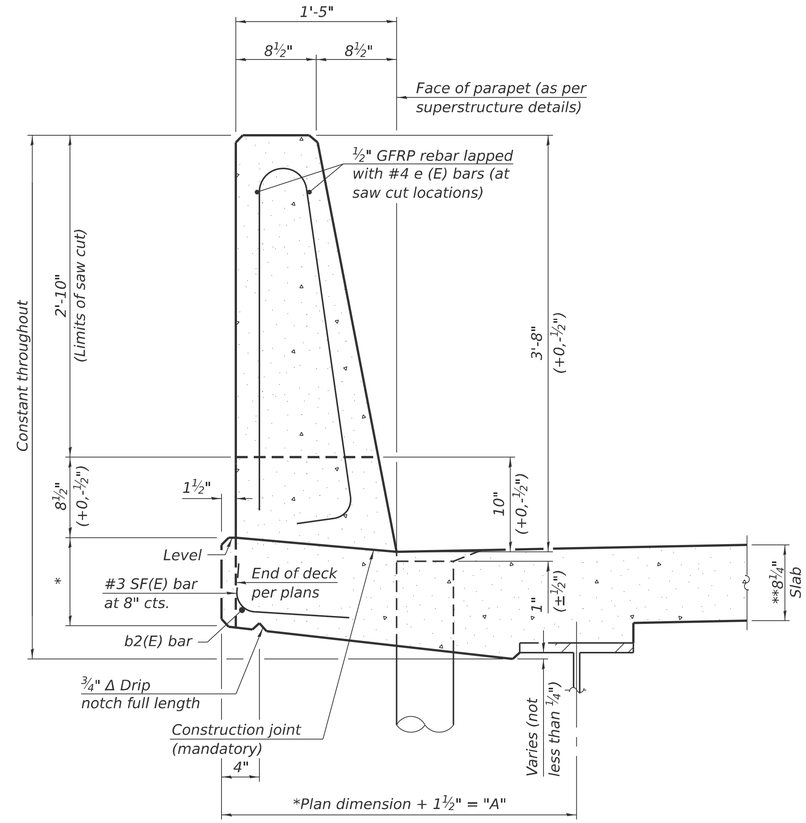

44" CONSTANT-SLOPE PARAPET SECTION

(Showing dimensions, d(E), and ½" Ø GFRP rebar)

*See Superstructure Details.

**Prior to grinding

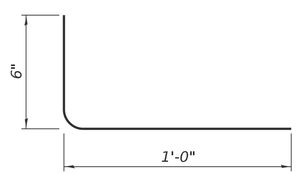

SF(E) BAR

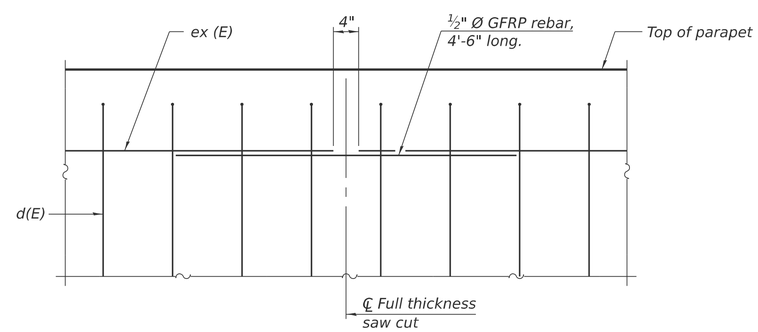

DETAIL - GFRP REBAR STIFFENING ELEVATION

(Place as shown in parapet section at each parapet joint location.)

Notes:

All dimensions shall remain the same as shown on superstructure details, except dimension "A" which is to be revised as shown.

Additional concrete needed to revise dimension "A" 0.00348 cu. yds./ft.

Place full depth aluminum sheets as shown on superstructure details.

Replace all cork joint filler locations with a full thickness saw cut.

SFP 39-44 10/27/2023

MODEL: Default
FILE NAME: G:\Users\6\66501-d5-IDOT-I-57 Structure Projects-TP&W RR and 2nd St\Survey D366M80\SN038-0005_0006\Consultant_Data\Chamlin_2025\Design\0380005_0006-66M80-039-CONC_PARA_SLIPFRM_OPT.dgn

Chamlin & Associates

USER NAME = CHAMLIN	DESIGNED - PDF	REVISED -	
	DRAWN - LAG	REVISED -	
	CHECKED - JLS	REVISED -	
PLOT DATE = 2/27/2026	DATE - 04/21/2025	REVISED -	

STATE OF ILLINOIS
DEPARTMENT OF TRANSPORTATION

CONCRETE PARAPET SLIPFORMING OPTION
STRUCTURE NO. 038-0005 (NB) & 038-0006 (SB)

SCALE: SHEET 39 OF 39 SHEETS STA. TO STA.

F.A.I. RTE.	SECTION	COUNTY	TOTAL SHEETS	SHEET NO.
57	(38-4,38-5)BR,D,CR	IROQUOIS	437	224

CONTRACT NO. 66M80

ILLINOIS FED. AID PROJECT

Benchmark: BM 331: "Cut square" located in the NE corner of the NW wingwall of SN 038-0008 - Station 584+49.23, 66.35' Rt, Elev. 667.39

Existing Structures: Structure 038-0007 (NB) and 038-0008 (SB) were originally constructed in 1967 as Section 38-5-HB-I. In 1976, a bituminous wearing surface was applied. In 2000, the deck was scarified and a 3" microsilica overlay was applied. In 2012, the structural steel was painted. The structures are three span bridges (31'-5", 39'-2" and 31'-5") and consist of continuous non-composite multi-girder steel WF beams. The substructure consists of concrete stub abutments on concrete piles and multi-column piers on spread footings. The bridges are 106'-8" long from back to back abutments. The out to out of deck width is 42'-0". The piers are skewed at 1°11'00" left ahead but the abutments and centerline of pier bearings are at rt angles to the centerline of I-57. Aluminum handrails on concrete parapets are present on both sides. The deck is to be removed and replaced while traffic is routed to the other side of I-57 via median crossovers.

No Salvage.

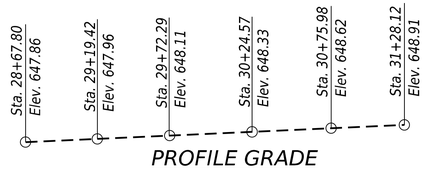

PROFILE GRADE
(Established from Survey)
(Along W. 2nd St. ℄)

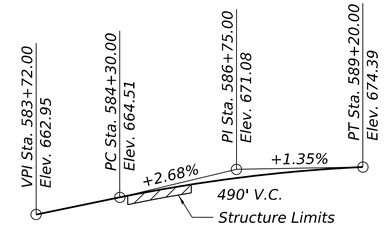

PROFILE GRADE
(Along ℄ I-57 NB)
(Up to 1/4" to be ground off the bridge deck and bridge approach slabs.
The profile grade shown is the final grade after grinding)

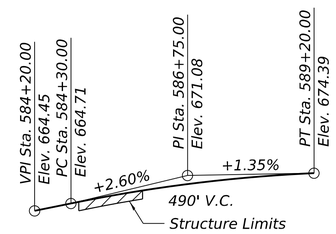

PROFILE GRADE
(Along ℄ I-57 SB)
(Up to 1/4" to be ground off the bridge deck and bridge approach slabs.
The profile grade shown is the final grade after grinding)

DESIGN SPECIFICATIONS

2002 AASHTO Standard Specifications for Highway Bridges, 17th Edition
2006 Seismic Retrofitting Manual for Highway Structures: Part I - Bridges (FHWA-HRT-06-032)

LOADING HS20-44

Allow 25#/sq. ft. for future wearing surface.

DESIGN STRESSES

FIELD UNITS (NEW CONST.)
f'c = 4,000 psi (Superstructure)
f'c = 3,500 psi (Substructure)
fy = 60,000 psi (Reinforcement)

FIELD UNITS (EX. CONST.)
fc = 1,400 psi (Substructure)
fs = 20,000 psi (Reinforcement)
fs = 20,000 psi (Structural Steel)

SEISMIC DATA

Seismic Retrofit Category (SRC) = A
Design Spectral Acceleration at 1.0 sec. (S_{D1}) = 0.111g
Design Spectral Acceleration at 0.2 sec. (S_{DS}) = 0.179g
Soil Site Class = D
Performance Level = I

SCOPE OF WORK:

1. Remove and replace existing concrete deck and approach slabs.
2. Clean and paint existing beam ends.
3. Make new deck composite full length by installing shear studs.
4. Reconfigure existing abutments and wingwalls to semi-integral configuration.
5. Strengthen pier caps using fiber wraps.
6. Remove and replace elastomeric bearings at abutments.
7. Repair existing substructure units.
8. Remove and replace slopewall with Riprap Class A4

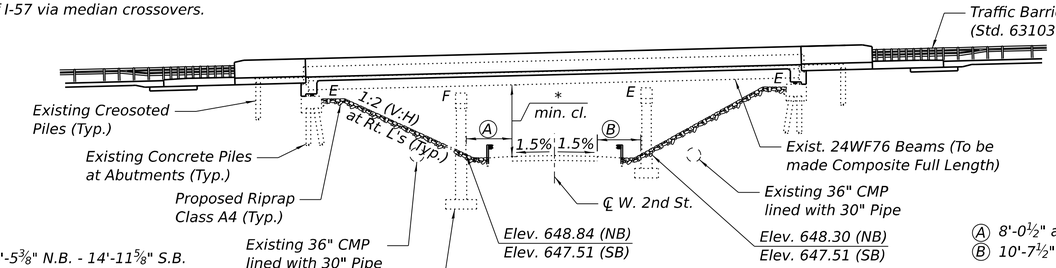

* Proposed 15'-5⅜" N.B. - 14'-11⅝" S.B.
Existing 15'-5⅛" N.B. - 14'-9⅜" S.B.

ELEVATION

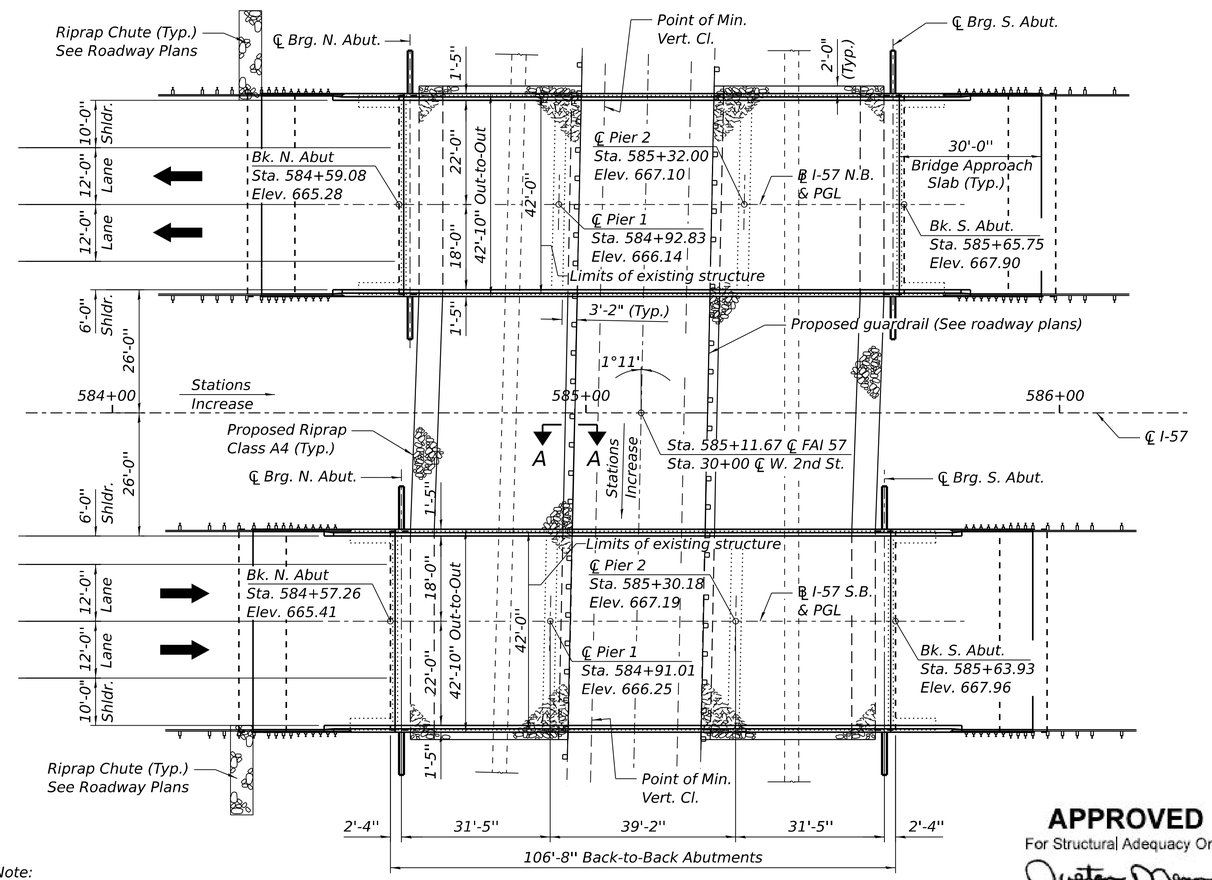

PLAN

Note:
Up to ¼ inch to be ground off the bridge deck and bridge approach slabs. Elevations shown in Plan represent elevation after grinding.
For Section A-A, see Sheet 2 of 43.

APPROVED
For Structural Adequacy Only
Engineer of Bridges & Structures

5-14-26
Date
JORGE L. SANCHEZ
LICENSED STRUCTURAL ENGINEER NO. 081-006073
STATE OF ILLINOIS
expires 11-30-2026
Signature
PROFESSIONAL DESIGN FIRM LICENSE NO. 184-001717

INDEX OF SHEETS

1	General Plan and Elevation
2	General Data
3-5	Top of Slab Elevations (NB)
6-8	Top of Slab Elevations (SB)
9	Top of North Approach Slab Elevation (NB)
10	Top of South Approach Slab Elevation (NB)
11	Top of North Approach Slab Elevation (SB)
12	Top of South Approach Slab Elevation (SB)
13	Superstructure (NB)
14	Superstructure Details (NB)
15	Diaphragm Details (NB)
16	Superstructure (SB)
17	Superstructure Details (SB)
18	Diaphragm Details (SB)
19-20	Bridge Approach Slab Details (NB)
21-22	Bridge Approach Slab Details (SB)
23	Framing Plan (NB)
24	Framing Plan (SB)
25	Structural Steel Details
26	North Abutment Bearing Details (NB)
27	South Abutment Bearing Details (NB)
28	North Abutment Bearing Details (SB)
29	South Abutment Bearing Details (SB)
30	Abutment Concrete Removal
31	North Abutment (NB)
32	South Abutment (NB)
33	North Abutment (SB)
34	South Abutment (SB)
35	Pier 1 Repairs (NB)
36	Pier 2 Repairs (NB)
37	Pier 1 Repairs (SB)
38	Pier 2 Repairs (SB)
39	Pier 1 Details (NB)
40	Pier 2 Details (NB)
41	Pier 1 Details (SB)
42	Pier 2 Details (SB)
43	Concrete Parapet Slipforming Option

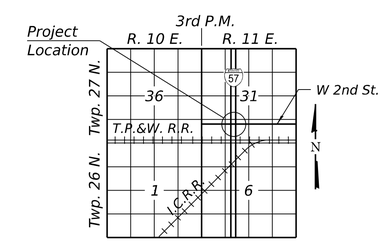

LOCATION SKETCH

GENERAL PLAN & ELEVATION
I-57 OVER W. 2ND ST.
F.A.I. ROUTE 57 - SEC. (38-5HB-1)D
IROQUOIS COUNTY
STATION 585+11.67
STRUCTURE NUMBER 038-0007 (N.B.)
STRUCTURE NUMBER 038-0008 (S.B.)

MODEL: Default
FILE NAME: G:\Users\6\66501-05-I\DOT-I-57 Structure Projects-TP&W RR and 2nd St\Survey D366M80\SN038-0007_0008\Consultant_Data\Chamlin_2025\Design\0380007_0008-66M80-001-GPE.dgn

Chamlin & Associates

USER NAME = CHAMLIN	DESIGNED - PDF	REVISED - 05/12/2026 PDF	
	DRAWN - LAG	REVISED -	
	CHECKED - JLS	REVISED -	
PLOT DATE = 9/12/2025	DATE - 05/07/2025	REVISED -	

STATE OF ILLINOIS
DEPARTMENT OF TRANSPORTATION

GENERAL PLAN & ELEVATION
STRUCTURE NO. 038-0007 (NB) & 038-0008 (SB)

SCALE: SHEET 1 OF 43 SHEETS STA. TO STA.

F.A.I. RTE.	SECTION	COUNTY	TOTAL SHEETS	SHEET NO.
57	(38-4, 38-5) BR, D, CR	IROQUOIS	437	225
		CONTRACT NO. 66M80		
		ILLINOIS	FED. AID PROJECT	

REV. 5/28/26

TOTAL BILL OF MATERIAL

ITEM	UNIT	SUPER	SUB	TOTAL
Stone Riprap, Class A4	Sq. Yd.	--	1,123	1,123
Filter Fabric	Sq. Yd.	--	1,123	1,123
Concrete Removal	Cu. Yd.	--	56.2	56.2
Slope Wall Removal	Sq. Yd.	--	1,236	1,236
Removal of Existing Concrete Deck	Each	2	--	2
Protective Shield	Sq. Yd.	996	--	996
Structure Excavation	Cu. Yd.	--	263.1	263.1
Concrete Structures	Cu. Yd.	--	76.9	76.9
Concrete Superstructures	Cu. Yd.	371.3	--	371.3
Bridge Deck Grooving (longitudinal)	Sq. Yd.	1,463.8	--	1,463.8
Protective Coat	Sq. Yd.	1,206.6	--	1,206.6
Concrete Superstructure (Approach Slab)	Cu. Yd.	234	--	234
Furnishing and Erecting Structural Steel	Pound	3920	--	3920
Stud Shear Connectors	Each	6,594	--	6,594
Reinforcement Bars, Epoxy Coated	Pound	174,320	5,280	179,600
Name Plates	Each	2	--	2
Elastomeric Bearing Assembly, Type 1	Each	28	--	28
Anchor Bolts, 3/4"	Each	56	--	56
Granular Backfill for Structures	Cu. Yd.	--	263.1	263.1
Epoxy Crack Injection	Foot	--	161	161
Geocomposite Wall Drain	Sq. Yd.	--	154.9	154.9
Pipe Underdrains for Structures 4"	Foot	--	282	282
Fiber Wrap	Sq. Ft.	--	788	788
Bar Terminators	Each	640	--	640
Jack and Remove Existing Bearing	Each	--	28	28
Containment and Disposal of Lead Paint Cleaning Residues No. 3	L. Sum.	1	--	1
Containment and Disposal of Lead Paint Cleaning Residues No. 2	L. Sum.	1	--	1
Cleaning and Painting Steel Bridge 3	L. Sum.	1	--	1
Cleaning and Painting Steel Bridge 2	L. Sum.	1	--	1
Structural Repair of Concrete (depth equal to or less than 5 inches)	Sq. Ft.	--	24	24
Diamond Grinding (Bridge Section)	Sq. Yd.	1,463	--	1,463

STA. 585+11.67
RE-BUILT 20__ BY
STATE OF ILLINOIS
F.A.I. Rt. 57 Sec. (38-5HB-1)D
LOADING HL-93
STR. NO. 038-0007

STA. 585+11.67
RE-BUILT 20__ BY
STATE OF ILLINOIS
F.A.I. Rt. 57 Sec. (38-5HB-1)D
LOADING HL-93
STR. NO. 038-0008

NAME PLATE

See Std. 515001

Existing Name Plate shall be cleaned and relocated next to new Name Plate. Cost included with Name Plates.

BYPASS FLOWRATE FROM BRIDGE LIMITS (END OF APPROACH SLAB) TO ROADWAY (SN 038-0007: N.B. BRIDGE)

	NW Curbline	SW Curbline	NE Curbline	SE Curbline
Q (C.F.S.)	0.418	N/A	0.505	N/A

BYPASS FLOWRATE FROM BRIDGE LIMITS (END OF APPROACH SLAB) TO ROADWAY (SN 038-0008: S.B. BRIDGE)

	NW Curbline	SW Curbline	NE Curbline	SE Curbline
Q (C.F.S.)	0.505	N/A	0.418	N/A

GENERAL NOTES

No field welding is permitted except as specified in the contract documents.

Prior to pouring the new concrete deck, all heavy or loose rust, loose mill scale, and other loose detrimental foreign material shall be removed from the surfaces in contact with concrete (SSPC-SP3 standards). Tightly adhered paint may remain unless otherwise noted. Removal shall be accomplished by methods that will not damage the steel and the cost will be paid for according to Article 109.04 of the Standard Specifications.

As directed by the Engineer, existing construction accessories welded to the top flange of beams and girders shall be removed. The weld areas shall be ground flush and inspected for cracks using magnetic particle testing (MT) or dye penetrant testing (PT) by qualified personnel approved by the Engineer. Any cracks that cannot be removed by grinding ¼ in. deep shall be identified and reported to the Bureau of Bridges & Structures for further disposition. The cost of removing welded accessories, grinding and inspecting weld areas and grinding cracks will be paid for according to Article 109.04 of the Standard Specifications.

Reinforcement bars designated (E) shall be epoxy coated.

Bearing seat surfaces shall be constructed or adjusted to the designated elevations within a tolerance of ⅛ in. (0.01 ft.). Adjustment shall be made either by grinding the surface or by shimming the bearings.

Plan dimensions and details relative to the existing structure have been taken from existing plans are subject to nominal construction variations. The Contractor shall field verify existing dimensions and details affecting new construction and make necessary approved adjustments prior to construction or ordering of materials. Such variations shall not be cause for additional compensation for a change in scope of the work, however, the Contractor will be paid for the quantity actually furnished at the unit price bid for the work.

Cleaning and painting of the existing structural steel shall be as specified in the special provision for "Cleaning and Painting Existing Steel Structures". All beams, bearings and other structural steel within 5'-0" ft. (measured along the beam) of either side of the deck joints shall be cleaned per Near White Blast Cleaning - SSPC-SP10. The exterior surfaces and bottom of the bottom flange of the fascia beams shall be cleaned per Commercial Grade Power Tool Cleaning - SSPC-SP15.

The designate areas cleaned per Near White Blast Cleaning and per Commercial Grade Power Tool Cleaning shall be painted according to the requirements of the Organic Zinc-Rich Primer/Epoxy Intermediate Coat/Urethane Topcoat (OZ/E/U) paint system. The color of the final finish coat for all interior steel surfaces shall be Gray, Munsell No. 5B 7/1. The color of the final finish coat for the exterior and bottom flange of the fascia beams shall be Interstate Green, Munsell No. 7.5G 4/8.

The finishing machine rails shall be placed on the top of the top flange of the exterior beams within the deck pour. Beam blocks shall be placed between beams at all tie locations in each bay for the full width of the deck pour.

The existing structural steel coating contains lead. The Contractor shall take appropriate precautions to address the presence of lead on this project.

Concrete work is to be completed prior to painting of beams.

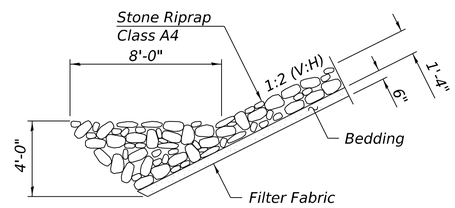

SECTION THRU RIPRAP

(SECTION A-A)

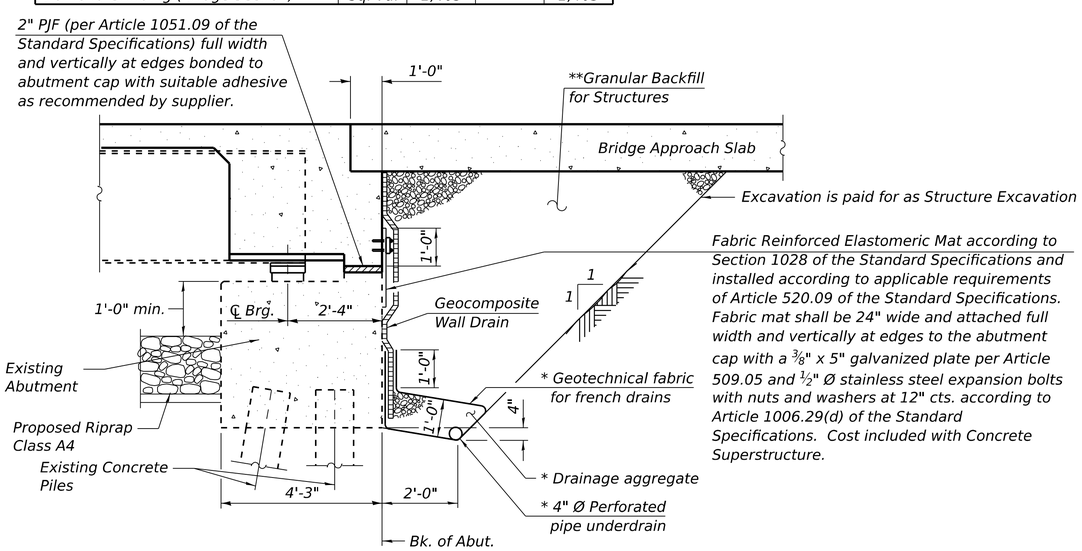

SECTION THRU SEMI-INTEGRAL ABUTMENT

(Horiz. dim. at Rt. ∠'s)

* Included in the cost of Pipe Underdrains for Structures.

** Granular Backfill for Structures shall follow Standard Specification 586 except the course aggregate shall be grade CA 7, CA 11, or CA 14.

Note:
All drainage system components shall extend to 2'-0" from the end of each wingwall except an outlet pipe shall extend until intersecting with the side slopes. The pipes shall drain into concrete headwalls. (See Article 601.05 of the Standard Specifications and Highway Standard 601101).

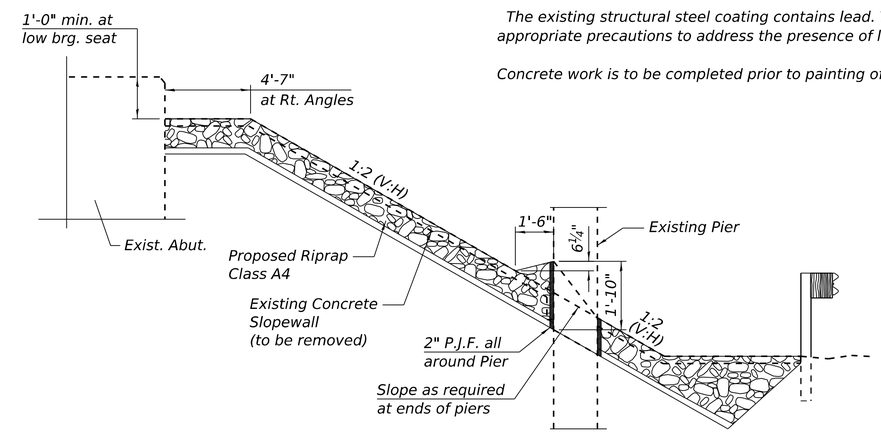

SECTION THRU RIPRAP SLOPEWALL

(North and South Slope Wall Replacement)

MODEL: Default
FILE NAME: G:\Users\6666501-dS-IDOT-I-57 Structure Projects-T&W RR and 2nd St\Survey D366M80\SN038-0007_0008\Consultant_Data\Chamlin_2025\Design\0380007_0008-66M80-002-GEN_DATA.dgn

Chamlin & Associates

USER NAME = CHAMLIN	DESIGNED - PDF	REVISED - 05/12/2026 PDF	
	DRAWN - LAG	REVISED -	
	CHECKED - JLS	REVISED -	
PLOT DATE = 5/14/2026	DATE - 04/21/2025	REVISED -	

STATE OF ILLINOIS
DEPARTMENT OF TRANSPORTATION

GENERAL DATA
STRUCTURE NO. 038-0007 (NB) & 038-0008 (SB)

SCALE: SHEET 2 OF 43 SHEETS STA. TO STA.

F.A.I. RTE.	SECTION	COUNTY	TOTAL SHEETS	SHEET NO.
57	(38-4, 38-5) BR, D, CR	IROQUOIS	437	226
		CONTRACT NO. 66M80		
		ILLINOIS	FED. AID PROJECT	

REV. 5/28/26

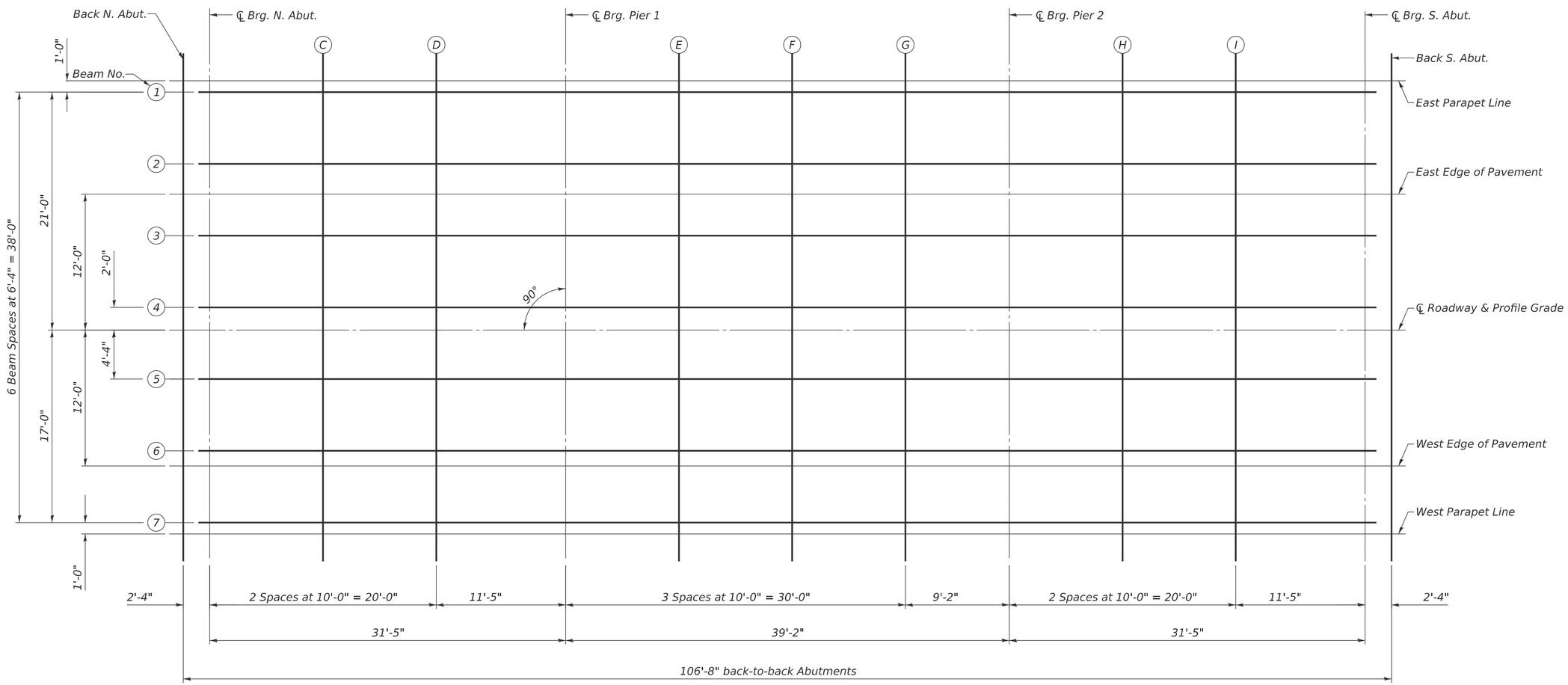

PLAN

(Structure No. 038-0007 (NB))

N

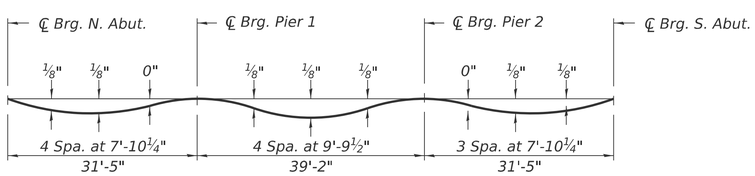

DEAD LOAD DEFLECTION DIAGRAM

(Includes weight of concrete only.)

Note:
The above deflections are not to be used in the field if the engineer is working from the grade elevations adjusted for dead load deflections and grinding as shown on sheets 4 and 5 of 43.

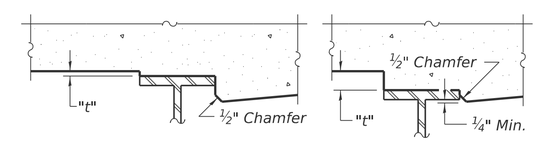

At Minimum Fillet

At Maximum Fillet

To determine "t": After all structural steel has been erected, elevations of the top flanges of the beams shall be taken at intervals shown below. These elevations subtracted from the "Theoretical Grade Elevations Adjusted for Dead Load Deflection and Grinding" shown below, minus the initial slab thickness prior to grinding, equals the fillet heights "t" above top flange of beams.

The slab is to be ground after curing to achieve smoothness, but the slab is not to be ground to elevations below the "Theoretical Grade Elevations" shown on sheets 4 and 5 of 43. For grinding the deck, see Special Provisions.

FILLET HEIGHTS

MODEL: Default
FILE NAME: G:\Users\6\66501-05-IDOT-I-57 Structure Projects-TP&W RR and 2nd St\Survey D36M80\SN038-0007_0008\Consultant_Data\Chamlin_2025\Design\0380007_0008-66M80-003-005-TOP_OF_SLAB_ELEVS_0007.dgn

Chamlin & Associates

USER NAME = CHAMLIN	DESIGNED - PDF	REVISED -	
	DRAWN - LAG	REVISED -	
	CHECKED - JLS	REVISED -	
PLOT DATE = 2/27/2026	DATE - 04/21/2025	REVISED -	

STATE OF ILLINOIS
DEPARTMENT OF TRANSPORTATION

TOP OF SLAB ELEVATIONS
STRUCTURE NO. 038-0007 (NB)

SCALE: | SHEET 3 OF 43 SHEETS | STA. | TO STA.

F.A.I. RTE.	SECTION	COUNTY	TOTAL SHEETS	SHEET NO.
57	(38-4,38-5)BR,D,CR	IROQUOIS	437	227
		CONTRACT NO. 66M80		
		ILLINOIS	FED. AID PROJECT	

East Parapet Line

Location	Station	Offset	Theoretical Grade Elevations	Theoretical Grade Elevations adjusted for Dead Load Deflection and Grinding
Back N. Abut.	584+59.08	-22.00	664.90	664.92
CL Brg. N. Abut.	584+61.41	-22.00	664.96	664.98
C	584+71.41	-22.00	665.22	665.25
D	584+81.41	-22.00	665.47	665.50
CL Brg. Pier 1	584+92.83	-22.00	665.76	665.78
E	585+02.83	-22.00	666.01	666.04
F	585+12.83	-22.00	666.26	666.29
G	585+22.83	-22.00	666.50	666.53
CL Brg. Pier 2	585+32.00	-22.00	666.72	666.74
H	585+42.00	-22.00	666.96	666.99
I	585+52.00	-22.00	667.20	667.23
CL Brg. S. Abut.	585+63.42	-22.00	667.46	667.48
Back S. Abut.	585+65.75	-22.00	667.52	667.54

Beam 1

Location	Station	Offset	Theoretical Grade Elevations	Theoretical Grade Elevations adjusted for Dead Load Deflection and Grinding
Back N. Abut.	584+59.08	-21.00	664.92	664.94
CL Brg. N. Abut.	584+61.41	-21.00	664.98	665.00
C	584+71.41	-21.00	665.24	665.27
D	584+81.41	-21.00	665.49	665.52
CL Brg. Pier 1	584+92.83	-21.00	665.78	665.80
E	585+02.83	-21.00	666.03	666.06
F	585+12.83	-21.00	666.28	666.31
G	585+22.83	-21.00	666.52	666.55
CL Brg. Pier 2	585+32.00	-21.00	666.74	666.76
H	585+42.00	-21.00	666.98	667.01
I	585+52.00	-21.00	667.22	667.25
CL Brg. S. Abut.	585+63.42	-21.00	667.48	667.50
Back S. Abut.	585+65.75	-21.00	667.54	667.56

Beam 2

Location	Station	Offset	Theoretical Grade Elevations	Theoretical Grade Elevations adjusted for Dead Load Deflection and Grinding
Back N. Abut.	584+59.08	-14.67	665.04	665.07
CL Brg. N. Abut.	584+61.41	-14.67	665.11	665.13
C	584+71.41	-14.67	665.36	665.39
D	584+81.41	-14.67	665.62	665.65
CL Brg. Pier 1	584+92.83	-14.67	665.91	665.93
E	585+02.83	-14.67	666.16	666.18
F	585+12.83	-14.67	666.40	666.44
G	585+22.83	-14.67	666.65	666.67
CL Brg. Pier 2	585+32.00	-14.67	666.87	666.89
H	585+42.00	-14.67	667.11	667.13
I	585+52.00	-14.67	667.34	667.37
CL Brg. S. Abut.	585+63.42	-14.67	667.61	667.63
Back S. Abut.	585+65.75	-14.67	667.66	667.69

East Edge of Pavement

Location	Station	Offset	Theoretical Grade Elevations	Theoretical Grade Elevations adjusted for Dead Load Deflection and Grinding
Back N. Abut.	584+59.08	-12.00	665.10	665.12
CL Brg. N. Abut.	584+61.41	-12.00	665.16	665.18
C	584+71.41	-12.00	665.42	665.45
D	584+81.41	-12.00	665.67	665.70
CL Brg. Pier 1	584+92.83	-12.00	665.96	665.98
E	585+02.83	-12.00	666.21	666.24
F	585+12.83	-12.00	666.46	666.49
G	585+22.83	-12.00	666.70	666.73
CL Brg. Pier 2	585+32.00	-12.00	666.92	666.94
H	585+42.00	-12.00	667.16	667.19
I	585+52.00	-12.00	667.40	667.43
CL Brg. S. Abut.	585+63.42	-12.00	667.66	667.68
Back S. Abut.	585+65.75	-12.00	667.72	667.74

Beam 3

Location	Station	Offset	Theoretical Grade Elevations	Theoretical Grade Elevations adjusted for Dead Load Deflection and Grinding
Back N. Abut.	584+59.08	-8.33	665.15	665.17
CL Brg. N. Abut.	584+61.41	-8.33	665.21	665.23
C	584+71.41	-8.33	665.47	665.50
D	584+81.41	-8.33	665.73	665.75
CL Brg. Pier 1	584+92.83	-8.33	666.02	666.04
E	585+02.83	-8.33	666.26	666.29
F	585+12.83	-8.33	666.51	666.54
G	585+22.83	-8.33	666.76	666.78
CL Brg. Pier 2	585+32.00	-8.33	666.98	667.00
H	585+42.00	-8.33	667.22	667.24
I	585+52.00	-8.33	667.45	667.48
CL Brg. S. Abut.	585+63.42	-8.33	667.72	667.74
Back S. Abut.	585+65.75	-8.33	667.77	667.79

Beam 4

Location	Station	Offset	Theoretical Grade Elevations	Theoretical Grade Elevations adjusted for Dead Load Deflection and Grinding
Back N. Abut.	584+59.08	-2.00	665.25	665.27
CL Brg. N. Abut.	584+61.41	-2.00	665.31	665.33
C	584+71.41	-2.00	665.57	665.60
D	584+81.41	-2.00	665.82	665.85
CL Brg. Pier 1	584+92.83	-2.00	666.11	666.13
E	585+02.83	-2.00	666.36	666.39
F	585+12.83	-2.00	666.61	666.64
G	585+22.83	-2.00	666.85	666.88
CL Brg. Pier 2	585+32.00	-2.00	667.07	667.09
H	585+42.00	-2.00	667.31	667.34
I	585+52.00	-2.00	667.55	667.58
CL Brg. S. Abut.	585+63.42	-2.00	667.81	667.83
Back S. Abut.	585+65.75	-2.00	667.87	667.89

CL Roadway & Profile Grade

Location	Station	Offset	Theoretical Grade Elevations	Theoretical Grade Elevations adjusted for Dead Load Deflection and Grinding
Back N. Abut.	584+59.08	0.00	665.28	665.30
CL Brg. N. Abut.	584+61.41	0.00	665.34	665.36
C	584+71.41	0.00	665.60	665.63
D	584+81.41	0.00	665.85	665.88
CL Brg. Pier 1	584+92.83	0.00	666.14	666.16
E	585+02.83	0.00	666.39	666.42
F	585+12.83	0.00	666.64	666.67
G	585+22.83	0.00	666.88	666.91
CL Brg. Pier 2	585+32.00	0.00	667.10	667.12
H	585+42.00	0.00	667.34	667.37
I	585+52.00	0.00	667.58	667.61
CL Brg. S. Abut.	585+63.42	0.00	667.84	667.86
Back S. Abut.	585+65.75	0.00	667.90	667.92

Beam 5

Location	Station	Offset	Theoretical Grade Elevations	Theoretical Grade Elevations adjusted for Dead Load Deflection and Grinding
Back N. Abut.	584+59.08	4.33	665.21	665.23
CL Brg. N. Abut.	584+61.41	4.33	665.27	665.29
C	584+71.41	4.33	665.53	665.56
D	584+81.41	4.33	665.79	665.81
CL Brg. Pier 1	584+92.83	4.33	666.08	666.10
E	585+02.83	4.33	666.32	666.35
F	585+12.83	4.33	666.57	666.60
G	585+22.83	4.33	666.82	666.84
CL Brg. Pier 2	585+32.00	4.33	667.04	667.06
H	585+42.00	4.33	667.28	667.30
I	585+52.00	4.33	667.51	667.54
CL Brg. S. Abut.	585+63.42	4.33	667.78	667.80
Back S. Abut.	585+65.75	4.33	667.83	667.85

Beam 6

Location	Station	Offset	Theoretical Grade Elevations	Theoretical Grade Elevations adjusted for Dead Load Deflection and Grinding
Back N. Abut.	584+59.08	10.67	665.12	665.14
CL Brg. N. Abut.	584+61.41	10.67	665.18	665.20
C	584+71.41	10.67	665.44	665.47
D	584+81.41	10.67	665.69	665.72
CL Brg. Pier 1	584+92.83	10.67	665.98	666.00
E	585+02.83	10.67	666.23	666.26
F	585+12.83	10.67	666.48	666.51
G	585+22.83	10.67	666.72	666.75
CL Brg. Pier 2	585+32.00	10.67	666.94	666.96
H	585+42.00	10.67	667.18	667.21
I	585+52.00	10.67	667.42	667.45
CL Brg. S. Abut.	585+63.42	10.67	667.68	667.70
Back S. Abut.	585+65.75	10.67	667.74	667.76

West Edge of Pavement

Location	Station	Offset	Theoretical Grade Elevations	Theoretical Grade Elevations adjusted for Dead Load Deflection and Grinding
Back N. Abut.	584+59.08	12.00	665.10	665.12
CL Brg. N. Abut.	584+61.41	12.00	665.16	665.18
C	584+71.41	12.00	665.42	665.45
D	584+81.41	12.00	665.67	665.70
CL Brg. Pier 1	584+92.83	12.00	665.96	665.98
E	585+02.83	12.00	666.21	666.24
F	585+12.83	12.00	666.46	666.49
G	585+22.83	12.00	666.70	666.73
CL Brg. Pier 2	585+32.00	12.00	666.92	666.94
H	585+42.00	12.00	667.16	667.19
I	585+52.00	12.00	667.40	667.43
CL Brg. S. Abut.	585+63.42	12.00	667.66	667.68
Back S. Abut.	585+65.75	12.00	667.72	667.74

Beam 7

Location	Station	Offset	Theoretical Grade Elevations	Theoretical Grade Elevations adjusted for Dead Load Deflection and Grinding
Back N. Abut.	584+59.08	17.00	665.00	665.02
CL Brg. N. Abut.	584+61.41	17.00	665.06	665.08
C	584+71.41	17.00	665.32	665.35
D	584+81.41	17.00	665.57	665.60
CL Brg. Pier 1	584+92.83	17.00	665.86	665.88
E	585+02.83	17.00	666.11	666.14
F	585+12.83	17.00	666.36	666.39
G	585+22.83	17.00	666.60	666.63
CL Brg. Pier 2	585+32.00	17.00	666.82	666.84
H	585+42.00	17.00	667.06	667.09
I	585+52.00	17.00	667.30	667.33
CL Brg. S. Abut.	585+63.42	17.00	667.56	667.58
Back S. Abut.	585+65.75	17.00	667.62	667.64

West Parapet Line

Location	Station	Offset	Theoretical Grade Elevations	Theoretical Grade Elevations adjusted for Dead Load Deflection and Grinding
Back N. Abut.	584+59.08	18.00	664.98	665.00
CL Brg. N. Abut.	584+61.41	18.00	665.04	665.06
C	584+71.41	18.00	665.30	665.33
D	584+81.41	18.00	665.55	665.58
CL Brg. Pier 1	584+92.83	18.00	665.84	665.86
E	585+02.83	18.00	666.09	666.12
F	585+12.83	18.00	666.34	666.37
G	585+22.83	18.00	666.58	666.61
CL Brg. Pier 2	585+32.00	18.00	666.80	666.82
H	585+42.00	18.00	667.04	667.07
I	585+52.00	18.00	667.28	667.31
CL Brg. S. Abut.	585+63.42	18.00	667.54	667.56
Back S. Abut.	585+65.75	18.00	667.60	667.62

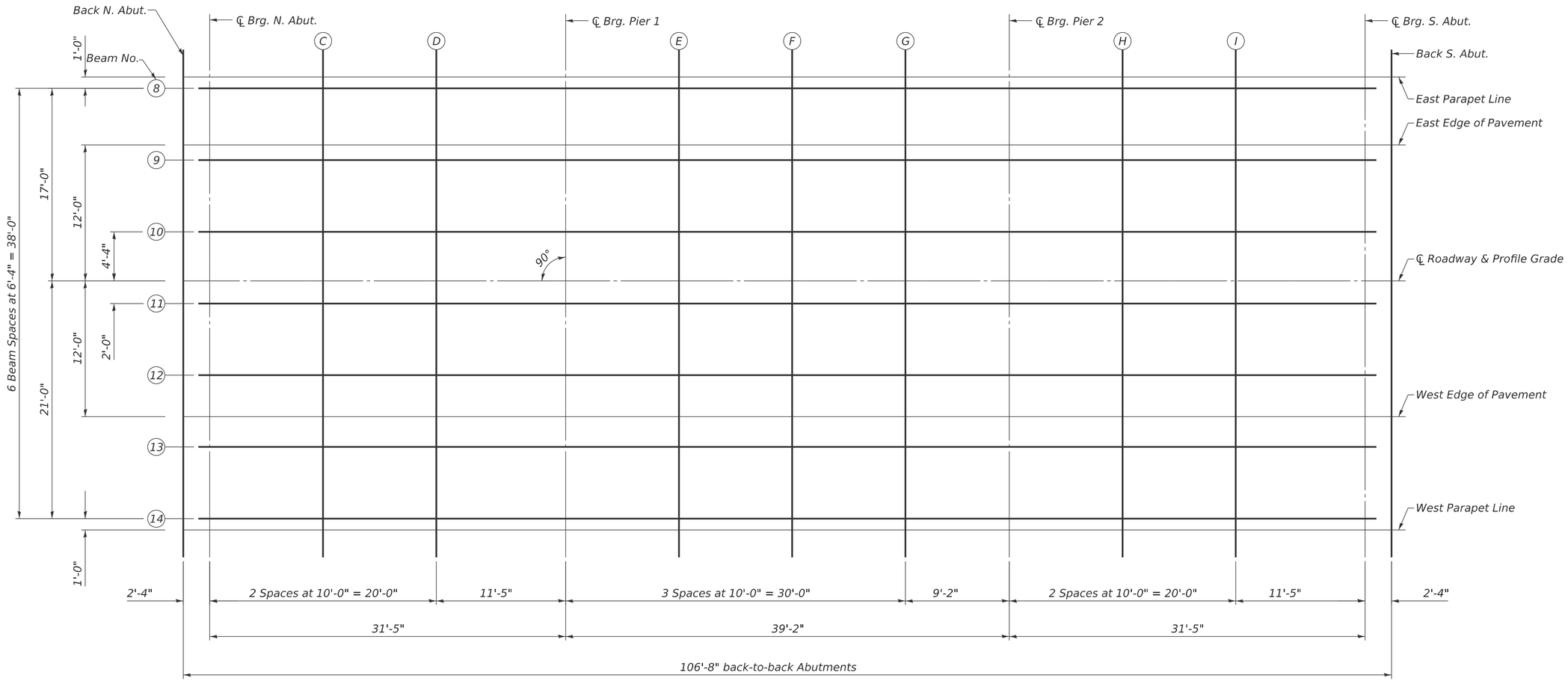

PLAN

(Structure No. 038-0008 (SB))

N

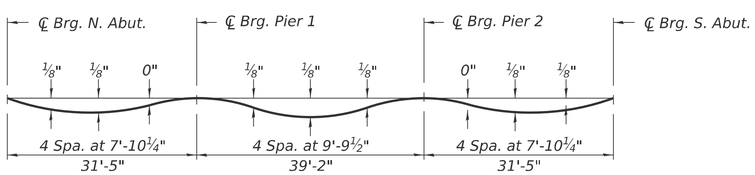

DEAD LOAD DEFLECTION DIAGRAM

(Includes weight of concrete only.)

Note:
The above deflections are not to be used in the field if the engineer is working from the grade elevations adjusted for dead load deflections and grinding as shown on sheets 4 and 5 of 43.

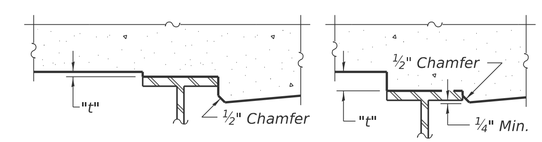

At Minimum Fillet

At Maximum Fillet

To determine "t": After all structural steel has been erected, elevations of the top flanges of the beams shall be taken at intervals shown below. These elevations subtracted from the "Theoretical Grade Elevations Adjusted for Dead Load Deflection and Grinding" shown below, minus the initial slab thickness prior to grinding, equals the fillet heights "t" above top flange of beams.

The slab is to be ground after curing to achieve smoothness, but the slab is not to be ground to elevations below the "Theoretical Grade Elevations" shown on sheets 4 and 5 of 43. For grinding the deck, see Special Provisions.

FILLET HEIGHTS

MODEL: Default
FILE NAME: G:\Users\6\66501-05-IDOT-I-57 Structure Projects-TP&W RR and 2nd St\Survey D36M80\SN038-0007_0008\Consultant_Data\Chamlin_2025\Design\0380007_0008-66M80-006-008-TOP_OF_SLAB_ELEVS_0008.dgn

Chamlin & Associates

USER NAME = CHAMLIN	DESIGNED - PDF	REVISED -	
	DRAWN - LAG	REVISED -	
	CHECKED - JLS	REVISED -	
PLOT DATE = 2/27/2026	DATE - 04/21/2025	REVISED -	

STATE OF ILLINOIS
DEPARTMENT OF TRANSPORTATION

TOP OF SLAB ELEVATIONS
STRUCTURE NO. 038-0008 (SB)

SCALE: | SHEET 6 OF 43 SHEETS | STA. | TO STA.

F.A.I. RTE.	SECTION	COUNTY	TOTAL SHEETS	SHEET NO.
57	(38-4,38-5)BR,D,CR	IROQUOIS	437	230
		CONTRACT NO. 66M80		
		ILLINOIS	FED. AID PROJECT	

East Parapet Line

Location	Station	Offset	Theoretical Grade Elevations	Theoretical Grade Elevations adjusted for Dead Load Deflection and Grinding
Back N. Abut.	584+57.26	-18.00	665.11	665.13
CL Brg. N. Abut.	584+59.59	-18.00	665.17	665.19
C	584+69.59	-18.00	665.42	665.45
D	584+79.59	-18.00	665.67	665.70
CL Brg. Pier 1	584+91.01	-18.00	665.95	665.97
E	585+01.01	-18.00	666.19	666.22
F	585+11.01	-18.00	666.43	666.46
G	585+21.01	-18.00	666.67	666.70
CL Brg. Pier 2	585+30.18	-18.00	666.89	666.91
H	585+40.18	-18.00	667.12	667.15
I	585+50.18	-18.00	667.35	667.38
CL Brg. S. Abut.	585+61.60	-18.00	667.61	667.63
Back S. Abut.	585+63.93	-18.00	667.66	667.68

Beam 8

Location	Station	Offset	Theoretical Grade Elevations	Theoretical Grade Elevations adjusted for Dead Load Deflection and Grinding
Back N. Abut.	584+57.26	-17.00	665.13	665.15
CL Brg. N. Abut.	584+59.59	-17.00	665.19	665.21
C	584+69.59	-17.00	665.44	665.47
D	584+79.59	-17.00	665.69	665.72
CL Brg. Pier 1	584+91.01	-17.00	665.97	665.99
E	585+01.01	-17.00	666.21	666.24
F	585+11.01	-17.00	666.45	666.48
G	585+21.01	-17.00	666.69	666.72
CL Brg. Pier 2	585+30.18	-17.00	666.91	666.93
H	585+40.18	-17.00	667.14	667.17
I	585+50.18	-17.00	667.37	667.40
CL Brg. S. Abut.	585+61.60	-17.00	667.63	667.65
Back S. Abut.	585+63.93	-17.00	667.68	667.70

East Edge of Pavement

Location	Station	Offset	Theoretical Grade Elevations	Theoretical Grade Elevations adjusted for Dead Load Deflection and Grinding
Back N. Abut.	584+57.26	-12.00	665.23	665.25
CL Brg. N. Abut.	584+59.59	-12.00	665.29	665.31
C	584+69.59	-12.00	665.54	665.57
D	584+79.59	-12.00	665.79	665.82
CL Brg. Pier 1	584+91.01	-12.00	666.07	666.09
E	585+01.01	-12.00	666.31	666.34
F	585+11.01	-12.00	666.55	666.58
G	585+21.01	-12.00	666.79	666.82
CL Brg. Pier 2	585+30.18	-12.00	667.01	667.03
H	585+40.18	-12.00	667.24	667.27
I	585+50.18	-12.00	667.47	667.50
CL Brg. S. Abut.	585+61.60	-12.00	667.73	667.75
Back S. Abut.	585+63.93	-12.00	667.78	667.80

Beam 9

Location	Station	Offset	Theoretical Grade Elevations	Theoretical Grade Elevations adjusted for Dead Load Deflection and Grinding
Back N. Abut.	584+57.26	-10.67	665.25	665.27
CL Brg. N. Abut.	584+59.59	-10.67	665.31	665.33
C	584+69.59	-10.67	665.56	665.59
D	584+79.59	-10.67	665.81	665.84
CL Brg. Pier 1	584+91.01	-10.67	666.09	666.11
E	585+01.01	-10.67	666.33	666.36
F	585+11.01	-10.67	666.57	666.60
G	585+21.01	-10.67	666.81	666.84
CL Brg. Pier 2	585+30.18	-10.67	667.03	667.05
H	585+40.18	-10.67	667.26	667.29
I	585+50.18	-10.67	667.49	667.52
CL Brg. S. Abut.	585+61.60	-10.67	667.75	667.77
Back S. Abut.	585+63.93	-10.67	667.80	667.82

Beam 10

Location	Station	Offset	Theoretical Grade Elevations	Theoretical Grade Elevations adjusted for Dead Load Deflection and Grinding
Back N. Abut.	584+57.26	-4.33	665.34	665.37
CL Brg. N. Abut.	584+59.59	-4.33	665.40	665.42
C	584+69.59	-4.33	665.65	665.68
D	584+79.59	-4.33	665.90	665.93
CL Brg. Pier 1	584+91.01	-4.33	666.18	666.20
E	585+01.01	-4.33	666.43	666.45
F	585+11.01	-4.33	666.67	666.70
G	585+21.01	-4.33	666.91	666.93
CL Brg. Pier 2	585+30.18	-4.33	667.12	667.14
H	585+40.18	-4.33	667.35	667.38
I	585+50.18	-4.33	667.59	667.62
CL Brg. S. Abut.	585+61.60	-4.33	667.85	667.87
Back S. Abut.	585+63.93	-4.33	667.90	667.92

CL Roadway & Profile Grade

Location	Station	Offset	Theoretical Grade Elevations	Theoretical Grade Elevations adjusted for Dead Load Deflection and Grinding
Back N. Abut.	584+57.26	0.00	665.41	665.43
CL Brg. N. Abut.	584+59.59	0.00	665.47	665.49
C	584+69.59	0.00	665.72	665.75
D	584+79.59	0.00	665.97	666.00
CL Brg. Pier 1	584+91.01	0.00	666.25	666.27
E	585+01.01	0.00	666.49	666.52
F	585+11.01	0.00	666.73	666.76
G	585+21.01	0.00	666.97	667.00
CL Brg. Pier 2	585+30.18	0.00	667.19	667.21
H	585+40.18	0.00	667.42	667.45
I	585+50.18	0.00	667.65	667.68
CL Brg. S. Abut.	585+61.60	0.00	667.91	667.93
Back S. Abut.	585+63.93	0.00	667.96	667.98

Beam 11

Location	Station	Offset	Theoretical Grade Elevations	Theoretical Grade Elevations adjusted for Dead Load Deflection and Grinding
Back N. Abut.	584+57.26	2.00	665.38	665.40
CL Brg. N. Abut.	584+59.59	2.00	665.44	665.46
C	584+69.59	2.00	665.69	665.72
D	584+79.59	2.00	665.94	665.97
CL Brg. Pier 1	584+91.01	2.00	666.22	666.24
E	585+01.01	2.00	666.46	666.49
F	585+11.01	2.00	666.70	666.73
G	585+21.01	2.00	666.94	666.97
CL Brg. Pier 2	585+30.18	2.00	667.16	667.18
H	585+40.18	2.00	667.39	667.42
I	585+50.18	2.00	667.62	667.65
CL Brg. S. Abut.	585+61.60	2.00	667.88	667.90
Back S. Abut.	585+63.93	2.00	667.93	667.95

Beam 12

Location	Station	Offset	Theoretical Grade Elevations	Theoretical Grade Elevations adjusted for Dead Load Deflection and Grinding
Back N. Abut.	584+57.26	8.33	665.28	665.31
CL Brg. N. Abut.	584+59.59	8.33	665.34	665.36
C	584+69.59	8.33	665.59	665.62
D	584+79.59	8.33	665.84	665.87
CL Brg. Pier 1	584+91.01	8.33	666.12	666.14
E	585+01.01	8.33	666.37	666.39
F	585+11.01	8.33	666.61	666.64
G	585+21.01	8.33	666.85	666.87
CL Brg. Pier 2	585+30.18	8.33	667.06	667.08
H	585+40.18	8.33	667.29	667.32
I	585+50.18	8.33	667.53	667.56
CL Brg. S. Abut.	585+61.60	8.33	667.79	667.81
Back S. Abut.	585+63.93	8.33	667.84	667.86

West Edge of Pavement

Location	Station	Offset	Theoretical Grade Elevations	Theoretical Grade Elevations adjusted for Dead Load Deflection and Grinding
Back N. Abut.	584+57.26	12.00	665.23	665.25
CL Brg. N. Abut.	584+59.59	12.00	665.29	665.31
C	584+69.59	12.00	665.54	665.57
D	584+79.59	12.00	665.79	665.82
CL Brg. Pier 1	584+91.01	12.00	666.07	666.09
E	585+01.01	12.00	666.31	666.34
F	585+11.01	12.00	666.55	666.58
G	585+21.01	12.00	666.79	666.82
CL Brg. Pier 2	585+30.18	12.00	667.01	667.03
H	585+40.18	12.00	667.24	667.27
I	585+50.18	12.00	667.47	667.50
CL Brg. S. Abut.	585+61.60	12.00	667.73	667.75
Back S. Abut.	585+63.93	12.00	667.78	667.80

Beam 13

Location	Station	Offset	Theoretical Grade Elevations	Theoretical Grade Elevations adjusted for Dead Load Deflection and Grinding
Back N. Abut.	584+57.26	14.67	665.18	665.20
CL Brg. N. Abut.	584+59.59	14.67	665.23	665.26
C	584+69.59	14.67	665.49	665.52
D	584+79.59	14.67	665.73	665.76
CL Brg. Pier 1	584+91.01	14.67	666.02	666.04
E	585+01.01	14.67	666.26	666.29
F	585+11.01	14.67	666.50	666.53
G	585+21.01	14.67	666.74	666.76
CL Brg. Pier 2	585+30.18	14.67	666.95	666.97
H	585+40.18	14.67	667.19	667.21
I	585+50.18	14.67	667.42	667.45
CL Brg. S. Abut.	585+61.60	14.67	667.68	667.70
Back S. Abut.	585+63.93	14.67	667.73	667.75

Beam 14

Location	Station	Offset	Theoretical Grade Elevations	Theoretical Grade Elevations adjusted for Dead Load Deflection and Grinding
Back N. Abut.	584+57.26	21.00	665.05	665.07
CL Brg. N. Abut.	584+59.59	21.00	665.11	665.13
C	584+69.59	21.00	665.36	665.39
D	584+79.59	21.00	665.61	665.64
CL Brg. Pier 1	584+91.01	21.00	665.89	665.91
E	585+01.01	21.00	666.13	666.16
F	585+11.01	21.00	666.37	666.40
G	585+21.01	21.00	666.61	666.64
CL Brg. Pier 2	585+30.18	21.00	666.83	666.85
H	585+40.18	21.00	667.06	667.09
I	585+50.18	21.00	667.29	667.32
CL Brg. S. Abut.	585+61.60	21.00	667.55	667.57
Back S. Abut.	585+63.93	21.00	667.60	667.62

West Parapet Line

Location	Station	Offset	Theoretical Grade Elevations	Theoretical Grade Elevations adjusted for Dead Load Deflection and Grinding
Back N. Abut.	584+57.26	22.00	665.03	665.05
CL Brg. N. Abut.	584+59.59	22.00	665.09	665.11
C	584+69.59	22.00	665.34	665.37
D	584+79.59	22.00	665.59	665.62
CL Brg. Pier 1	584+91.01	22.00	665.87	665.89
E	585+01.01	22.00	666.11	666.14
F	585+11.01	22.00	666.35	666.38
G	585+21.01	22.00	666.59	666.62
CL Brg. Pier 2	585+30.18	22.00	666.81	666.83
H	585+40.18	22.00	667.04	667.07
I	585+50.18	22.00	667.27	667.30
CL Brg. S. Abut.	585+61.60	22.00	667.53	667.55
Back S. Abut.	585+63.93	22.00	667.58	667.60

East Edge of Shoulder				
Location	Station	Offset	Theoretical Grade Elevations	Theoretical Grade Elevations adjusted for Grinding
North End of North Approach Slab	584+30.08	-22.00	664.13	664.15
A	584+40.08	-22.00	664.40	664.42
B	584+50.08	-22.00	664.66	664.68
South End of North Approach Slab	584+60.08	-22.00	664.92	664.94

East Edge of Pavement				
Location	Station	Offset	Theoretical Grade Elevations	Theoretical Grade Elevations adjusted for Grinding
North End of North Approach Slab	584+30.08	-12.00	664.33	664.35
A	584+40.08	-12.00	664.60	664.62
B	584+50.08	-12.00	664.86	664.88
South End of North Approach Slab	584+60.08	-12.00	665.12	665.14

CL Roadway & Profile Grade				
Location	Station	Offset	Theoretical Grade Elevations	Theoretical Grade Elevations adjusted for Grinding
North End of North Approach Slab	584+30.08	0.00	664.51	664.53
A	584+40.08	0.00	664.78	664.80
B	584+50.08	0.00	665.04	665.06
South End of North Approach Slab	584+60.08	0.00	665.30	665.32

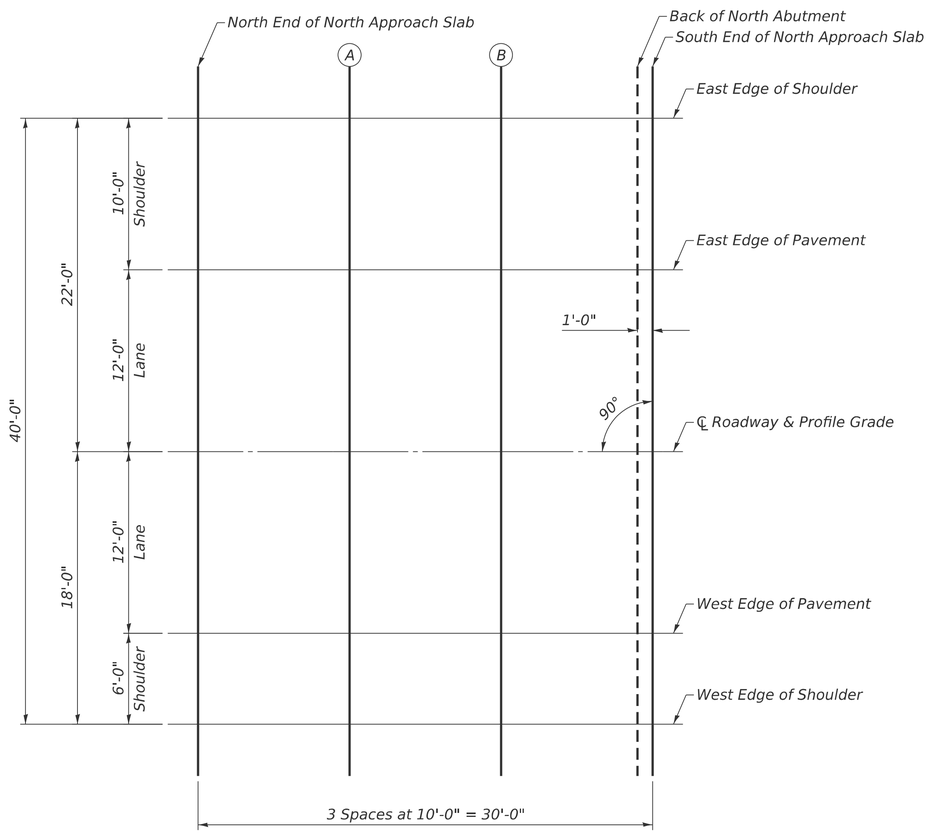

PLAN

West Edge of Pavement				
Location	Station	Offset	Theoretical Grade Elevations	Theoretical Grade Elevations adjusted for Grinding
North End of North Approach Slab	584+30.08	12.00	664.33	664.35
A	584+40.08	12.00	664.60	664.62
B	584+50.08	12.00	664.86	664.88
South End of North Approach Slab	584+60.08	12.00	665.12	665.14

West Edge of Shoulder				
Location	Station	Offset	Theoretical Grade Elevations	Theoretical Grade Elevations adjusted for Grinding
North End of North Approach Slab	584+30.08	18.00	664.21	664.23
A	584+40.08	18.00	664.48	664.50
B	584+50.08	18.00	664.74	664.76
South End of North Approach Slab	584+60.08	18.00	665.00	665.02

E-AS1

5-15-2023

MODEL: Default
FILE NAME: G:\Users\6\66501-05-IDOT-I-57 Structure Projects-TP&W RR and 2nd St\Survey D36\M80\SN038-0007_0008\Consultant_Data\Chamlin_2025\Design\0380007_0008-66M80-009-TOP_OF_N_APP_SLAB_ELEVS_0007.dgn

Chamlin & Associates

USER NAME = CHAMLIN	DESIGNED - PDF	REVISED -	
	DRAWN - LAG	REVISED -	
	CHECKED - JLS	REVISED -	
PLOT DATE = 2/27/2026	DATE - 04/21/2025	REVISED -	

STATE OF ILLINOIS
DEPARTMENT OF TRANSPORTATION

TOP OF NORTH APPROACH SLAB ELEVATIONS
STRUCTURE NO. 038-0007 (NB)

SCALE: | SHEET 9 OF 43 SHEETS | STA. | TO STA.

F.A.I. RTE.	SECTION	COUNTY	TOTAL SHEETS	SHEET NO.
57	(38-4,38-5)BR,D,CR	IROQUOIS	437	233
		CONTRACT NO. 66M80		
		ILLINOIS	FED. AID PROJECT	

East Edge of Shoulder

Location	Station	Offset	Theoretical Grade Elevations	Theoretical Grade Elevations adjusted for Grinding
North End of South Approach Slab	585+64.75	-22.00	667.49	667.51
J	585+74.75	-22.00	667.72	667.74
K	585+84.75	-22.00	667.95	667.97
South End of South Approach Slab	585+94.75	-22.00	668.18	668.20

East Edge of Pavement

Location	Station	Offset	Theoretical Grade Elevations	Theoretical Grade Elevations adjusted for Grinding
North End of South Approach Slab	585+64.75	-12.00	667.69	667.71
J	585+74.75	-12.00	667.92	667.94
K	585+84.75	-12.00	668.15	668.17
South End of South Approach Slab	585+94.75	-12.00	668.38	668.40

CL Roadway & Profile Grade

Location	Station	Offset	Theoretical Grade Elevations	Theoretical Grade Elevations adjusted for Grinding
North End of South Approach Slab	585+64.75	0.00	667.87	667.89
J	585+74.75	0.00	668.10	668.12
K	585+84.75	0.00	668.33	668.35
South End of South Approach Slab	585+94.75	0.00	668.56	668.58

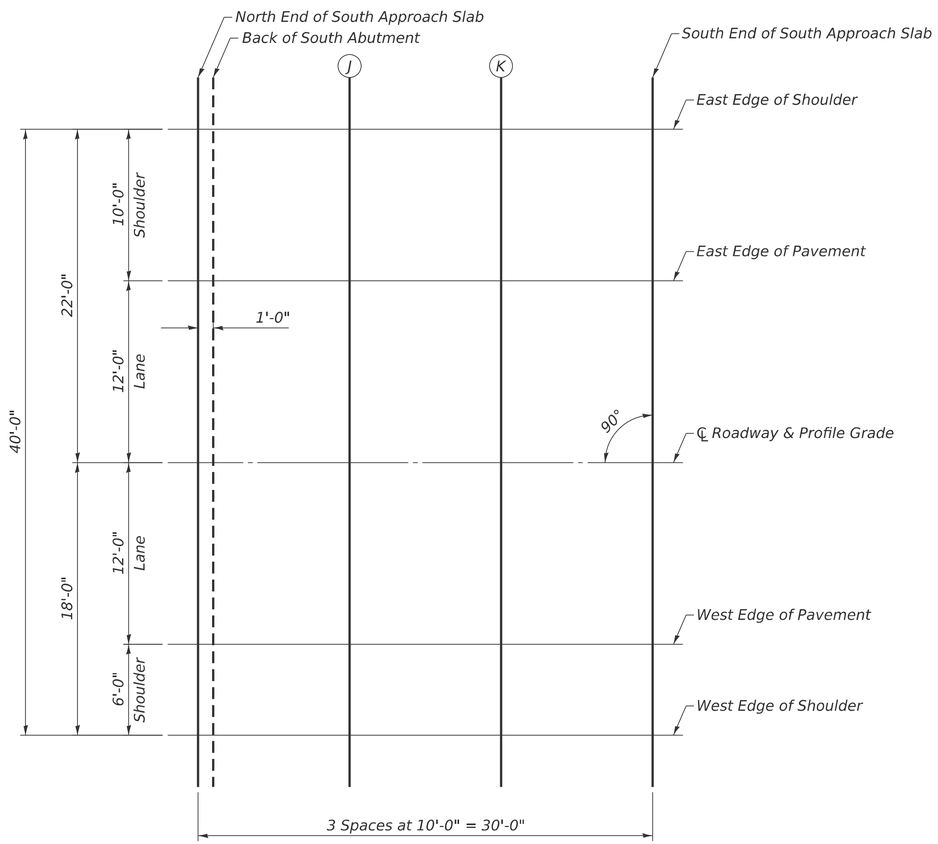

PLAN

West Edge of Pavement

Location	Station	Offset	Theoretical Grade Elevations	Theoretical Grade Elevations adjusted for Grinding
North End of South Approach Slab	585+64.75	12.00	667.69	667.71
J	585+74.75	12.00	667.92	667.94
K	585+84.75	12.00	668.15	668.17
South End of South Approach Slab	585+94.75	12.00	668.38	668.40

West Edge of Shoulder

Location	Station	Offset	Theoretical Grade Elevations	Theoretical Grade Elevations adjusted for Grinding
North End of South Approach Slab	585+64.75	18.00	667.57	667.59
J	585+74.75	18.00	667.80	667.82
K	585+84.75	18.00	668.03	668.05
South End of South Approach Slab	585+94.75	18.00	668.26	668.28

MODEL: Default
FILE NAME: G:\Users\6\66501-05-IDOT-I-57 Structure Projects-TP&W RR and 2nd St\Survey D36\M80\SN038-0007_0008\Consultant_Data\Chamlin_2025\Design\0380007_0008-66M80-010-TOP_OF_S_APP_SLAB_ELEVS_0007.dgn

Chamlin & Associates

USER NAME = CHAMLIN	DESIGNED - PDF	REVISED -	
	DRAWN - LAG	REVISED -	
	CHECKED - JLS	REVISED -	
PLOT DATE = 2/27/2026	DATE - 04/21/2025	REVISED -	

STATE OF ILLINOIS
DEPARTMENT OF TRANSPORTATION

TOP OF SOUTH APPROACH SLAB ELEVATIONS
STRUCTURE NO. 038-0007 (NB)

SCALE: | SHEET 10 OF 43 SHEETS | STA. | TO STA.

F.A.I. RTE.	SECTION	COUNTY	TOTAL SHEETS	SHEET NO.
57	(38-4,38-5)BR,D,CR	IROQUOIS	437	234

CONTRACT NO. 66M80

ILLINOIS | FED. AID PROJECT

East Edge of Shoulder				
Location	Station	Offset	Theoretical Grade Elevations	Theoretical Grade Elevations adjusted for Grinding
North End of North Approach Slab	584+28.26	-18.00	664.36	664.38
A	584+38.26	-18.00	664.62	664.64
B	584+48.26	-18.00	664.88	664.90
South End of North Approach Slab	584+58.26	-18.00	665.13	665.15

East Edge of Pavement				
Location	Station	Offset	Theoretical Grade Elevations	Theoretical Grade Elevations adjusted for Grinding
North End of North Approach Slab	584+28.26	-12.00	664.48	664.50
A	584+38.26	-12.00	664.74	664.76
B	584+48.26	-12.00	665.00	665.02
South End of North Approach Slab	584+58.26	-12.00	665.25	665.27

CL Roadway & Profile Grade				
Location	Station	Offset	Theoretical Grade Elevations	Theoretical Grade Elevations adjusted for Grinding
North End of North Approach Slab	584+28.26	0.00	664.66	664.68
A	584+38.26	0.00	664.92	664.94
B	584+48.26	0.00	665.18	665.20
South End of North Approach Slab	584+58.26	0.00	665.43	665.45

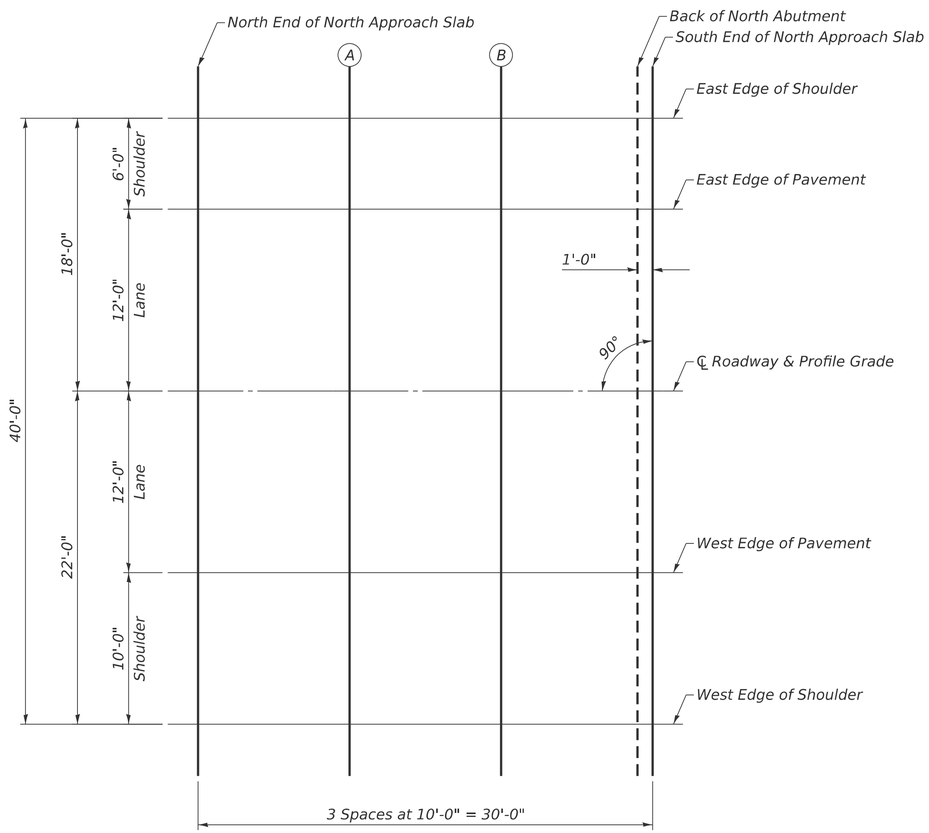

PLAN

N

West Edge of Pavement				
Location	Station	Offset	Theoretical Grade Elevations	Theoretical Grade Elevations adjusted for Grinding
North End of North Approach Slab	584+28.26	12.00	664.48	664.50
A	584+38.26	12.00	664.74	664.76
B	584+48.26	12.00	665.00	665.02
South End of North Approach Slab	584+58.26	12.00	665.25	665.27

West Edge of Shoulder				
Location	Station	Offset	Theoretical Grade Elevations	Theoretical Grade Elevations adjusted for Grinding
North End of North Approach Slab	584+28.26	22.00	664.28	664.30
A	584+38.26	22.00	664.54	664.56
B	584+48.26	22.00	664.80	664.82
South End of North Approach Slab	584+58.26	22.00	665.05	665.07

E-AS1

5-15-2023

MODEL: Default
FILE NAME: G:\Users\6\66501-05-IDOT-I-57 Structure Projects-TP&W RR and 2nd St\Survey D36\M80\SN038-0007_0008\Consultant_Data\Chamlin_2025\Design\0380007_0008-66M80-011-TOP_OF_N_APP_SLAB_ELEVS_0008.dgn

Chamlin & Associates

USER NAME = CHAMLIN	DESIGNED - PDF	REVISED -	
	DRAWN - LAG	REVISED -	
	CHECKED - JLS	REVISED -	
PLOT DATE = 2/27/2026	DATE - 04/21/2025	REVISED -	

STATE OF ILLINOIS
DEPARTMENT OF TRANSPORTATION

TOP OF NORTH APPROACH SLAB ELEVATIONS
STRUCTURE NO. 038-0008 (SB)

SCALE: | SHEET 11 OF 43 SHEETS | STA. TO STA.

F.A.I. RTE.	SECTION	COUNTY	TOTAL SHEETS	SHEET NO.
57	(38-4,38-5)BR,D,CR	IROQUOIS	437	235

CONTRACT NO. 66M80

ILLINOIS | FED. AID PROJECT

East Edge of Shoulder

Location	Station	Offset	Theoretical Grade Elevations	Theoretical Grade Elevations adjusted for Grinding
North End of South Approach Slab	585+62.93	-18.00	667.64	667.66
J	585+72.93	-18.00	667.87	667.89
K	585+82.93	-18.00	668.09	668.11
South End of South Approach Slab	585+92.93	-18.00	668.31	668.33

East Edge of Pavement

Location	Station	Offset	Theoretical Grade Elevations	Theoretical Grade Elevations adjusted for Grinding
North End of South Approach Slab	585+62.93	-12.00	667.76	667.78
J	585+72.93	-12.00	667.99	668.01
K	585+82.93	-12.00	668.21	668.23
South End of South Approach Slab	585+92.93	-12.00	668.43	668.45

CL Roadway & Profile Grade

Location	Station	Offset	Theoretical Grade Elevations	Theoretical Grade Elevations adjusted for Grinding
North End of South Approach Slab	585+62.93	0.00	667.94	667.96
J	585+72.93	0.00	668.17	668.19
K	585+82.93	0.00	668.39	668.41
South End of South Approach Slab	585+92.93	0.00	668.61	668.63

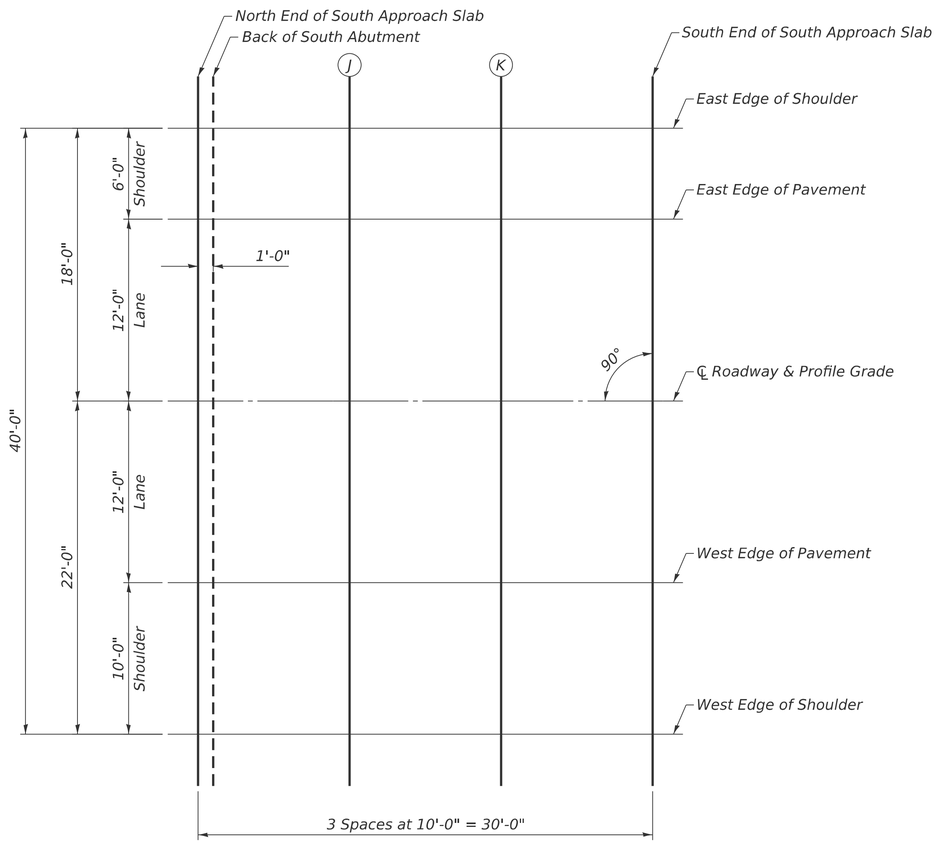

PLAN

West Edge of Pavement

Location	Station	Offset	Theoretical Grade Elevations	Theoretical Grade Elevations adjusted for Grinding
North End of South Approach Slab	585+62.93	12.00	667.76	667.78
J	585+72.93	12.00	667.99	668.01
K	585+82.93	12.00	668.21	668.23
South End of South Approach Slab	585+92.93	12.00	668.43	668.45

West Edge of Shoulder

Location	Station	Offset	Theoretical Grade Elevations	Theoretical Grade Elevations adjusted for Grinding
North End of South Approach Slab	585+62.93	22.00	667.56	667.58
J	585+72.93	22.00	667.79	667.81
K	585+82.93	22.00	668.01	668.03
South End of South Approach Slab	585+92.93	22.00	668.23	668.25

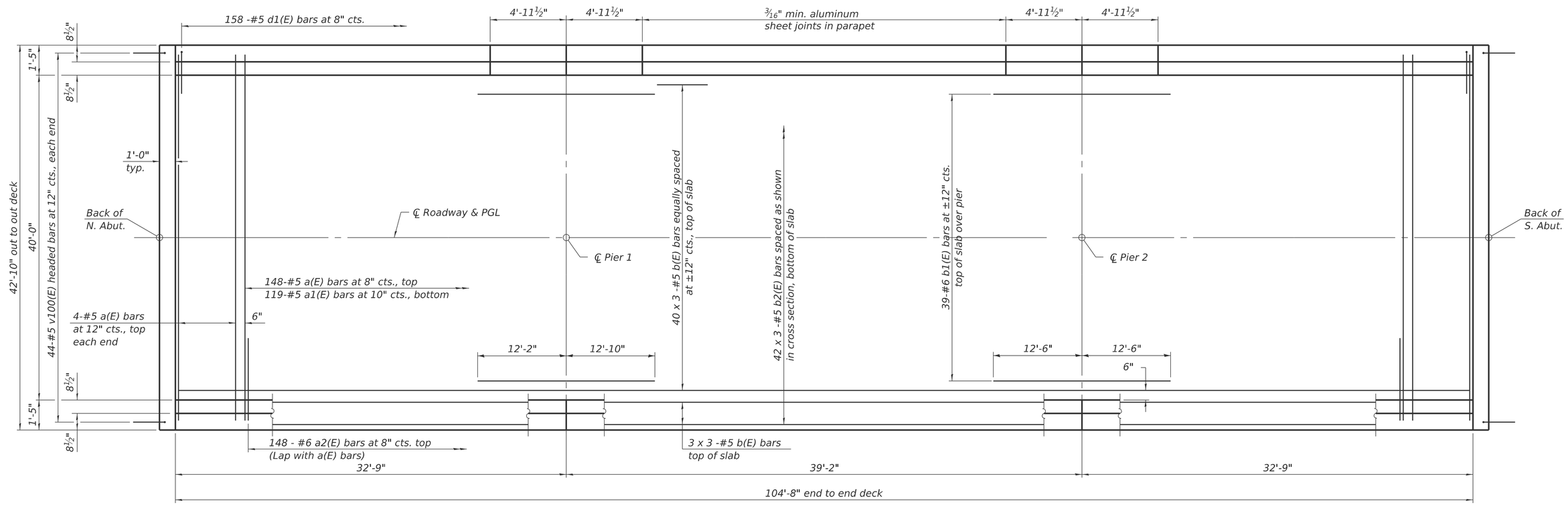

PLAN

MINIMUM BAR LAP

#5 bar = 3'-10"
#6 bar = 4'-10"

Notes:
See sheet 14 of 43 for superstructure details and Bill of Material.
Bars indicated thus 20 x 3-#5 etc. indicates 20 lines of bars with 3 lengths per line.

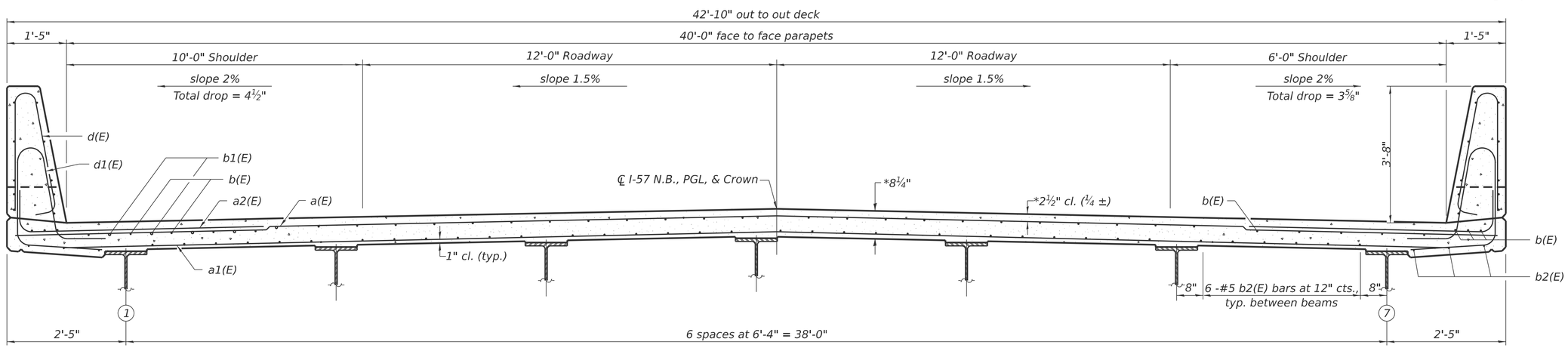

NEAR PIER

NEAR MIDSPAN

* Prior to grinding

CROSS SECTION

(Looking South)

SI-SB-2-0 4-4-2025

MODEL: Default
FILE NAME: G:\Users\6\66501-05-IDOT-I-57 Structure Projects-TP&W RR and 2nd St\Survey D366M80\SN038-0007_0008\Consultant_Data\Chamlin_2025\Design\0380007_0008-66M80-013-SUPERSTR_0007.dgn

Chamlin & Associates

USER NAME = CHAMLIN	DESIGNED - PDF	REVISED -	
	DRAWN - LAG	REVISED -	
	CHECKED - JLS	REVISED -	
PLOT DATE = 3/2/2026	DATE - 04/21/2025	REVISED -	

STATE OF ILLINOIS
DEPARTMENT OF TRANSPORTATION

SUPERSTRUCTURE
STRUCTURE NO. 038-0007 (NB)

SCALE: SHEET 13 OF 43 SHEETS STA. TO STA.

F.A.I. RTE.	SECTION	COUNTY	TOTAL SHEETS	SHEET NO.
57	(38-4,38-5)BR,D,CR	IROQUOIS	437	237

CONTRACT NO. 66M80

ILLINOIS FED. AID PROJECT

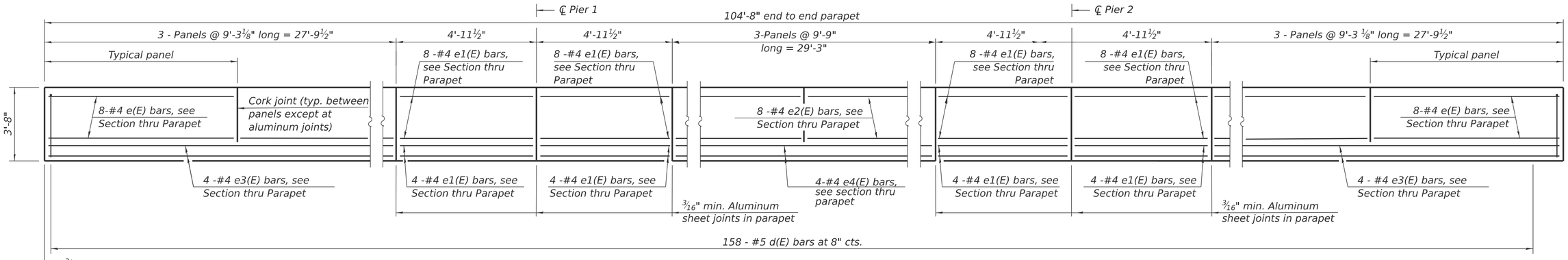

INSIDE ELEVATION OF PARAPET

MINIMUM BAR LAP

#4 bar = 2'-5"

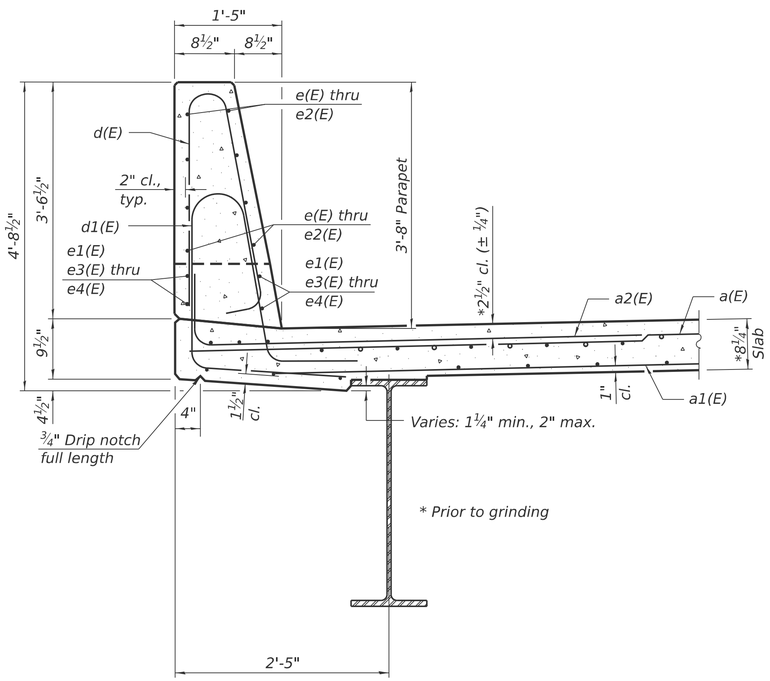

SECTION THRU PARAPET

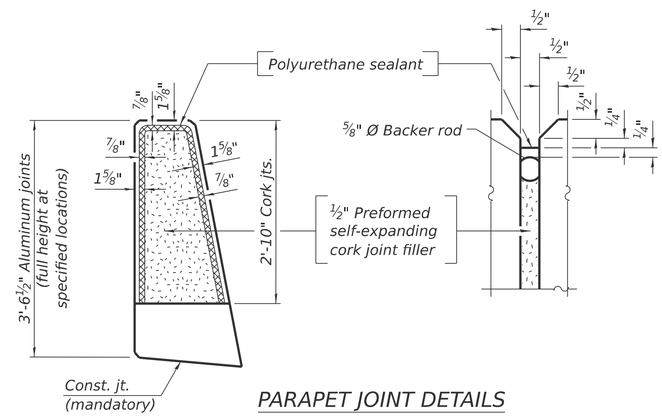

PARAPET JOINT DETAILS

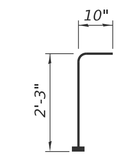

BAR v100(E)

(Headed. 88 - #5 Bar terminators)

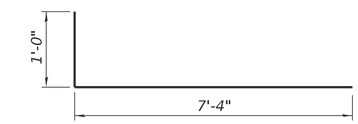

BAR a2(E)

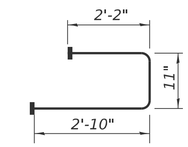

BAR s10(E)

(Headed. 168 - #5 Bar terminators)

SUPERSTRUCTURE BILL OF MATERIAL

Bar	No.	Size	Length	Shape
a(E)	156	#5	42'-6"	
a1(E)	119	#5	40'-6"	
a2(E)	296	#6	8'-4"	
b(E)	138	#5	37'-6"	
b1(E)	78	#6	27'-3"	
b2(E)	126	#5	37'-6"	
d(E)	316	#5	7'-0"	
d1(E)	316	#5	8'-5"	
e(E)	96	#4	8'-11"	
e1(E)	96	#4	4'-7"	
e2(E)	48	#4	9'-5"	
e3(E)	16	#4	27'-6"	
e4(E)	8	#4	28'-11"	
m10(E)	12	#6	42'-6"	
m11(E)	24	#6	6'-0"	
m12(E)	24	#6	6'-0"	
m14(E)	4	#4	42'-6"	
m15(E)	8	#6	2'-1"	
m16(E)	8	#6	2'-1"	
s10(E)	84	#5	5'-11"	
s11(E)	84	#5	8'-0"	
u10(E)	84	#4	2'-6"	
v100(E)	88	#5	3'-1"	
Reinforcement Bars, Epoxy Coated			Lbs.	38,870
Concrete Superstructure			Cu. Yds.	176.1

Bars indicated thus 1 x 2-#4 etc. indicates 1 line of bars with 2 lengths per line.

Notes:

The 3/16" min. aluminum sheet shall be ASTM B 209 alloy 3003-H14 and coated with 5 mils of either bitumen paint or epoxy paint to minimize reaction with wet concrete. Cost included with Concrete Superstructure.

The polyurethane sealant shall be according to Article 1050.04 of the Std. Spec. and the color shall be gray.

Bar terminators, paid for separately. See Total Bill of Material.

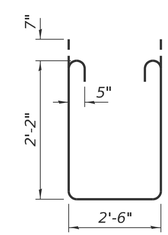

BAR s11(E)

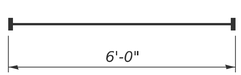

BAR m11(E)

(Headed 48 - #6 Bar terminators)

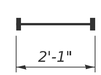

BAR m15(E)

(Headed 16 - #6 Bar terminators)

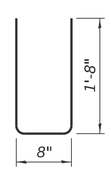

BAR u10(E)

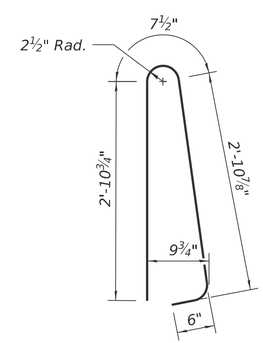

BAR d(E)

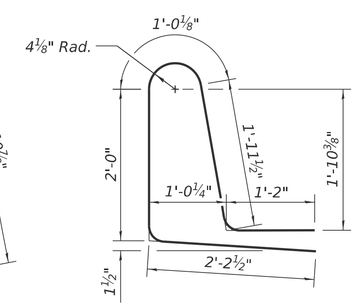

BAR d1(E)

SDI-SB-2 4-4-2025

MODEL: Default
FILE NAME: G:\Users\6\66501-05-IDOT-I-57 Structure Projects-TP&W RR and 2nd St\Survey D366M80\SN038-0007_0008\Consultant_Data\Chamlin_2025\Design\0380007_0008-66M80-014-SUPERSTR_DETS_0007.dgn

Chamlin & Associates

USER NAME = CHAMLIN	DESIGNED - PDF	REVISED -	
	DRAWN - LAG	REVISED -	
	CHECKED - JLS	REVISED -	
PLOT DATE = 2/26/2026	DATE - 04/21/2025	REVISED -	

STATE OF ILLINOIS
DEPARTMENT OF TRANSPORTATION

SUPERSTRUCTURE DETAILS
STRUCTURE NO. 038-0007 (NB)

SCALE: SHEET 14 OF 43 SHEETS STA. TO STA.

F.A.I. RTE.	SECTION	COUNTY	TOTAL SHEETS	SHEET NO.
57	(38-4,38-5)BR,D,CR	IROQUOIS	437	238

CONTRACT NO. 66M80

ILLINOIS | FED. AID PROJECT

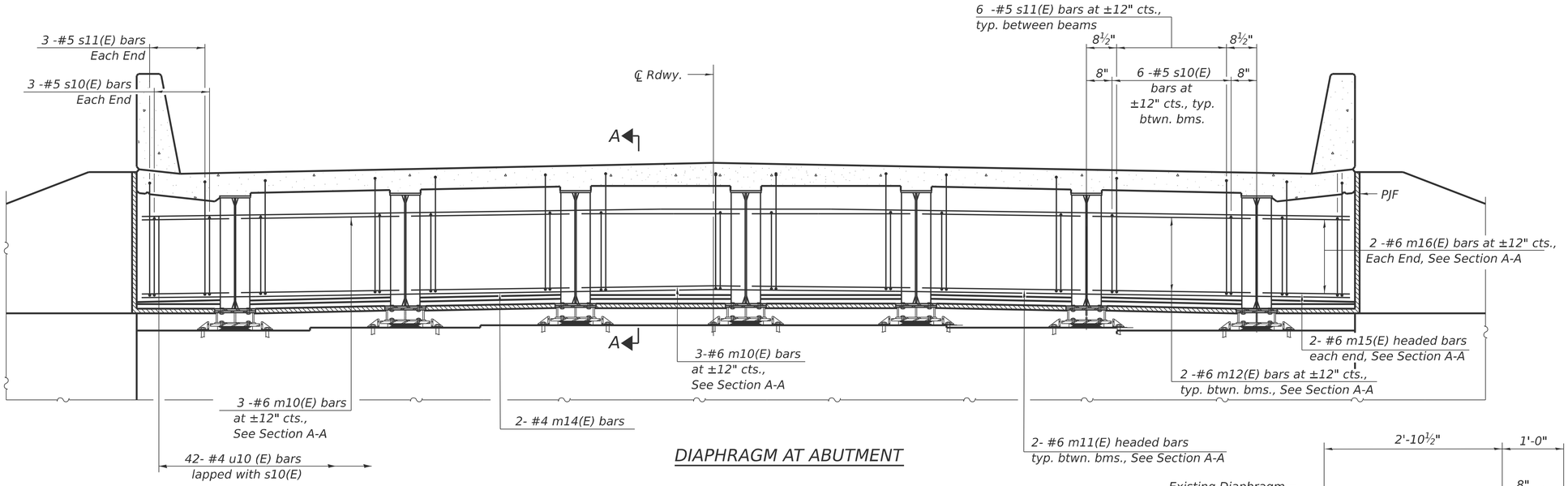

DIAPHRAGM AT ABUTMENT

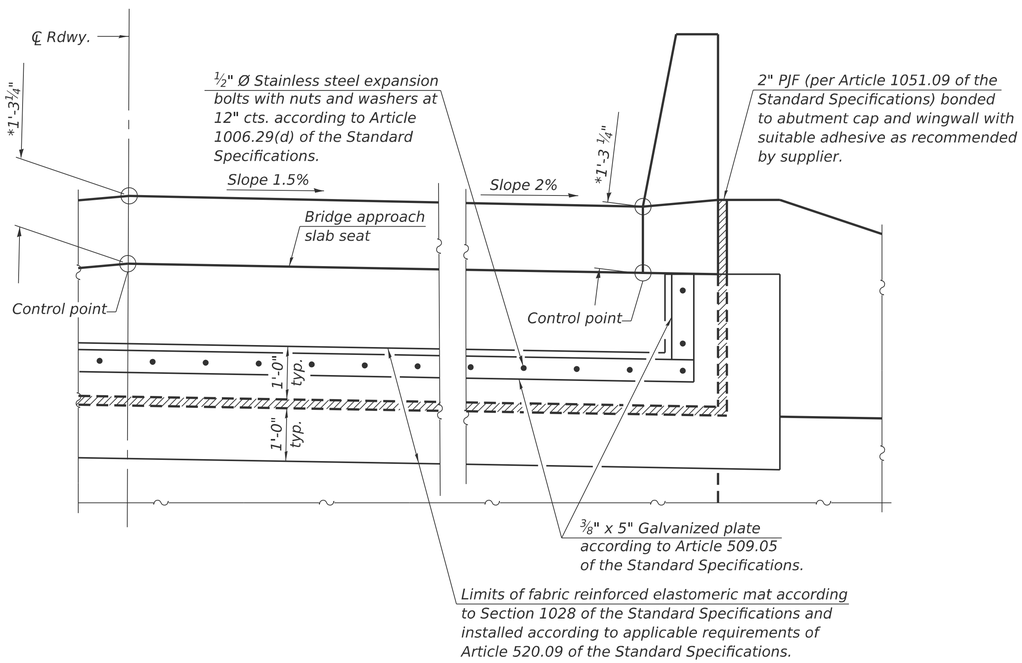

SECTION B-B

(Looking at back of abutment)

*Prior to grinding

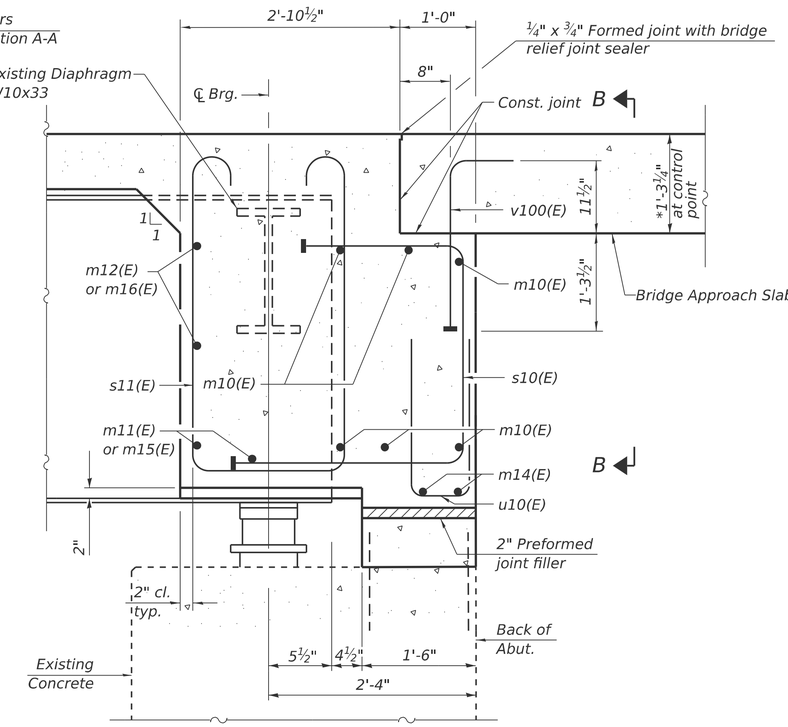

*Prior to grinding

SECTION A-A

Notes:

See sheet 14 of 43 for superstructure details and Bill of Material.

See sheet 2 of 43 for PJF details.

The approach slab seat shall have a constant slope determined from the control points shown.

Cost of fabric reinforced elastomeric mat, galvanized plate, stainless steel expansion bolts with nuts and washers and installation are included in the cost of Concrete Superstructure.

DIA-SB-0 4-4-2025

MODEL: Default
FILE NAME: G:\Users\66501-05-IDOT-I-57 Structure Projects-TP&W RR and 2nd St\Survey D366M80\SN\038-0007_0008\Consultant_Data\Chamlin_2025\Design\0380007_0008-66M80-015-DIAPHRAGM_DETTS_0007.dgn

Chamlin & Associates

USER NAME = CHAMLIN	DESIGNED - PDF	REVISED -	
	DRAWN - LAG	REVISED -	
	CHECKED - JLS	REVISED -	
PLOT DATE = 2/26/2026	DATE - 04/21/2025	REVISED -	

STATE OF ILLINOIS
DEPARTMENT OF TRANSPORTATION

DIAPHRAGM DETAILS
STRUCTURE NO. 038-0007 (NB)

SCALE: SHEET 15 OF 43 SHEETS STA. TO STA.

F.A.I. RTE.	SECTION	COUNTY	TOTAL SHEETS	SHEET NO.
57	(38-4,38-5)BR,D,CR	IROQUOIS	437	239
		CONTRACT NO. 66M80		
		ILLINOIS	FED. AID PROJECT	

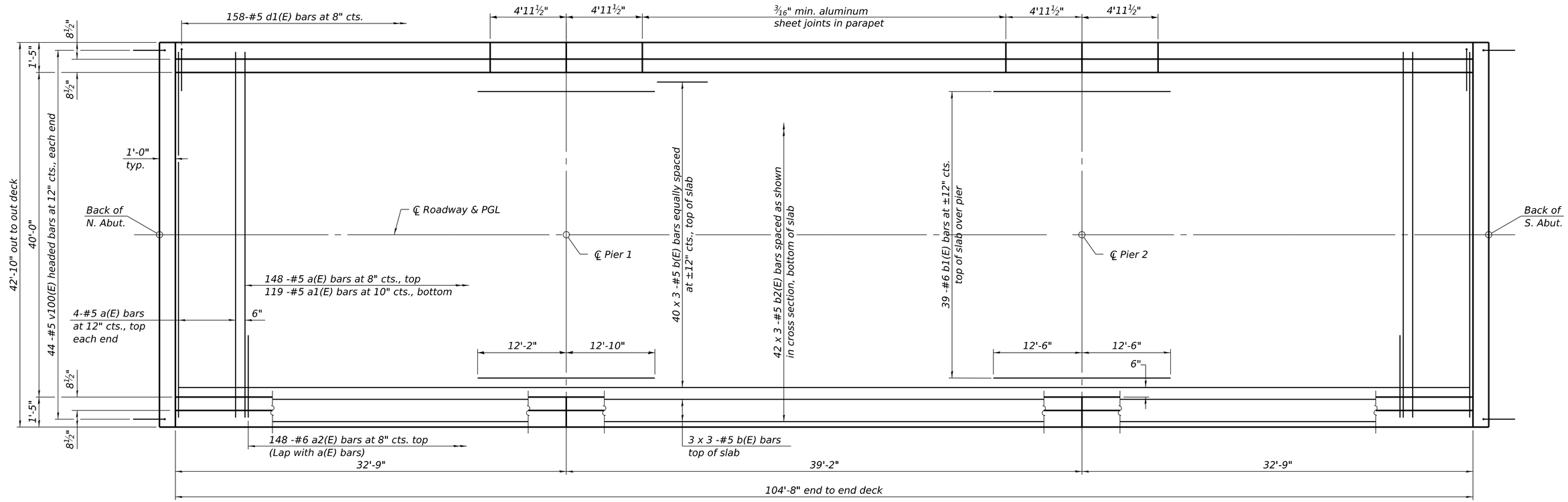

PLAN

MINIMUM BAR LAP

#5 bar = 3'-10"
#6 bar = 4'-10"

Notes:
See sheet 17 of 43 for superstructure details and Bill of Material.
Bars indicated thus 20 x 3-#5 etc. indicates 20 lines of bars with 3 lengths per line.

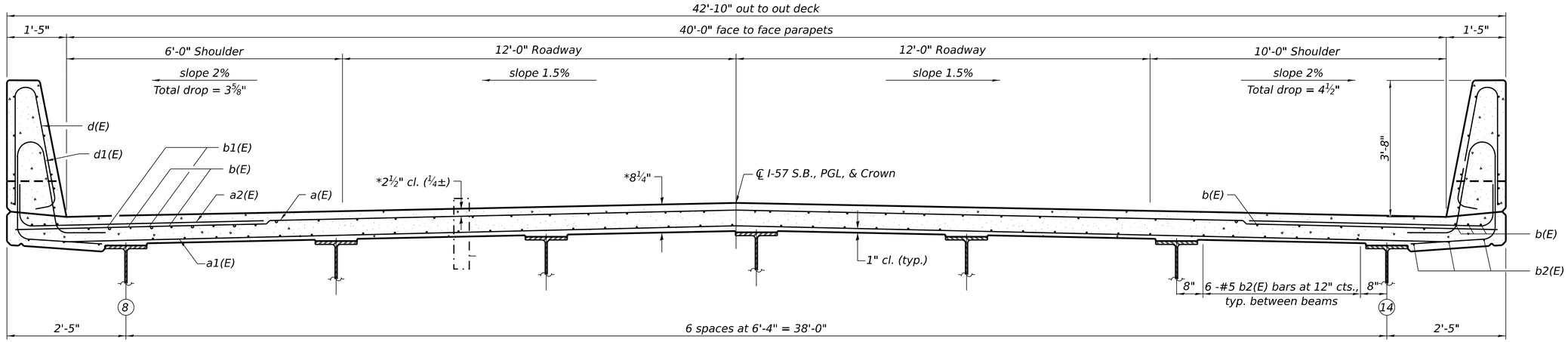

* Prior to grinding

NEAR PIER

NEAR MIDSPAN

CROSS SECTION
(Looking South)

SI-SB-2-0

4-4-2025

MODEL: Default
FILE NAME: G:\Users\0\66501-05-IDOT-I-57 Structure Projects-TP&W RR and 2nd St\Survey D366M80\SN\038-0007_0008\Consultant_Data\Chamlin_2025\Design\0380007_0008-66M80-016-SUPERSTR_0008.dgn

Chamlin & Associates

USER NAME = CHAMLIN	DESIGNED - PDF	REVISED - 1 05/12/2026 PDF	STATE OF ILLINOIS DEPARTMENT OF TRANSPORTATION
	DRAWN - LAG	REVISED -	
	CHECKED - JLS	REVISED -	
PLOT DATE = 5/14/2026	DATE - 04/21/2025	REVISED -	

SUPERSTRUCTURE
STRUCTURE NO. 038-0008 (SB)

SCALE: | SHEET 16 OF 43 SHEETS | STA. | TO STA.

F.A.I. RTE.	SECTION	COUNTY	TOTAL SHEETS	SHEET NO.
57	(38-4, 38-5) BR, D, CR	IROQUOIS	437	240
		CONTRACT NO. 66M80		
		ILLINOIS FED. AID PROJECT		

REV. 5/28/26

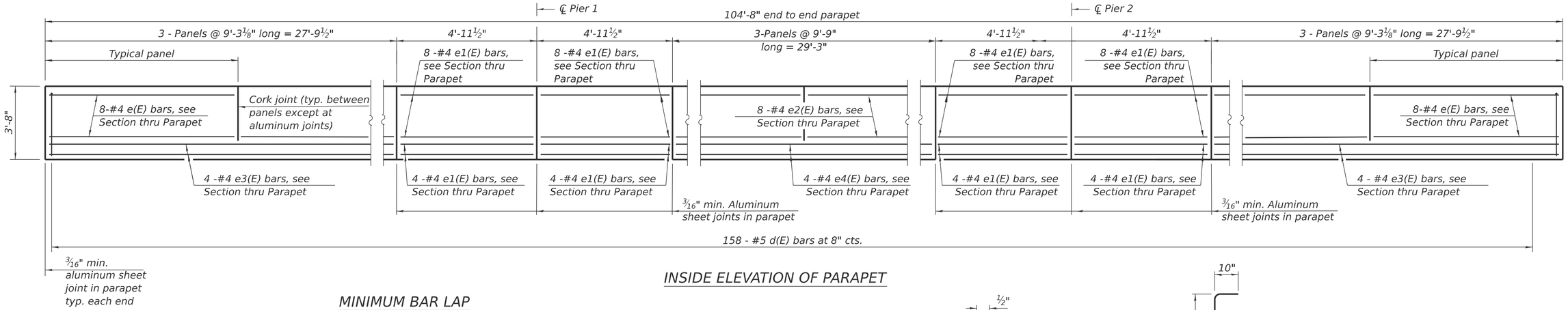

INSIDE ELEVATION OF PARAPET

MINIMUM BAR LAP

#4 bar = 2'-5"

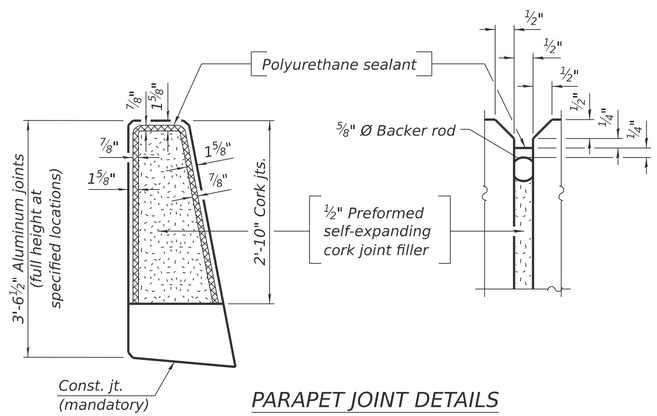

PARAPET JOINT DETAILS

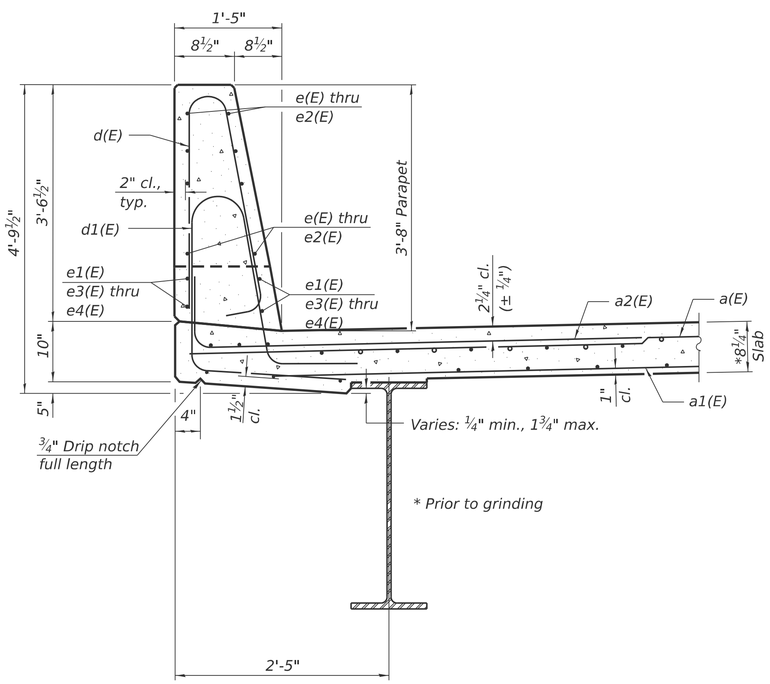

SECTION THRU PARAPET

Notes:

The 3/16" min. aluminum sheet shall be ASTM B 209 alloy 3003-H14 and coated with 5 mils of either bitumen paint or epoxy paint to minimize reaction with wet concrete. Cost included with Concrete Superstructure.

The polyurethane sealant shall be according to Article 1050.04 of the Std. Spec. and the color shall be gray.

Bar terminators, paid for separately. See Total Bill of Material.

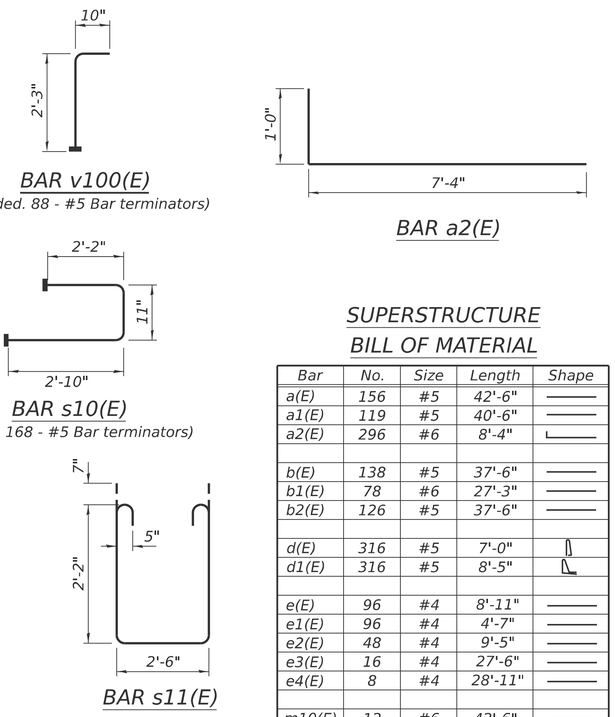

SUPERSTRUCTURE BILL OF MATERIAL

Bar	No.	Size	Length	Shape
a(E)	156	#5	42'-6"	
a1(E)	119	#5	40'-6"	
a2(E)	296	#6	8'-4"	
b(E)	138	#5	37'-6"	
b1(E)	78	#6	27'-3"	
b2(E)	126	#5	37'-6"	
d(E)	316	#5	7'-0"	
d1(E)	316	#5	8'-5"	
e(E)	96	#4	8'-11"	
e1(E)	96	#4	4'-7"	
e2(E)	48	#4	9'-5"	
e3(E)	16	#4	27'-6"	
e4(E)	8	#4	28'-11"	
m10(E)	12	#6	42'-6"	
m11(E)	24	#6	6'-0"	
m12(E)	24	#6	6'-0"	
m14(E)	4	#4	42'-6"	
m15(E)	8	#6	2'-1"	
m16(E)	8	#6	2'-1"	
s10(E)	84	#5	5'-11"	
s11(E)	84	#5	8'-0"	
u10(E)	84	#4	2'-6"	
v100(E)	88	#5	3'-1"	
Reinforcement Bars, Epoxy Coated			Lbs.	38,870
Concrete Superstructure			Cu. Yds.	178.4

Bars indicated thus 1 x 2-#4 etc. indicates 1 line of bars with 2 lengths per line.

BAR m11(E)
(Headed 48 - #6 Bar terminators)

BAR m15(E)
(Headed 16 - #6 Bar terminators)

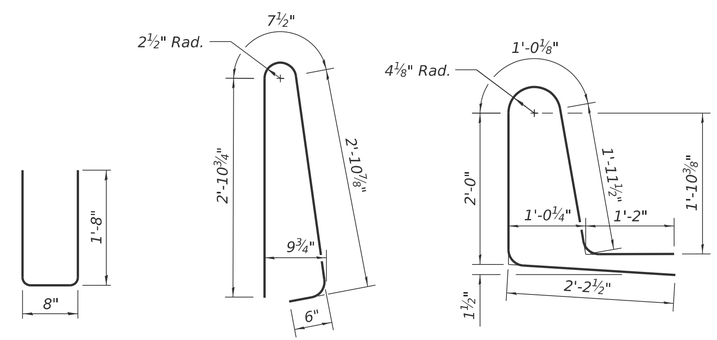

BAR u10(E)

BAR d(E)

BAR d1(E)

SDI-SB-2 4-4-2025

MODEL: Default
FILE NAME: G:\Users\6\66501-05-IDOT-I-57 Structure Projects-TP&W RR and 2nd St\Survey D386\M80\SN038-0007_0008\Consultant_Data\Chamlin_2025\Design\0380007_0008-66M80-017-SUPERSTR_DETS_0008.dgn

Chamlin & Associates

USER NAME = CHAMLIN	DESIGNED - PDF	REVISED -	
	DRAWN - LAG	REVISED -	
	CHECKED - JLS	REVISED -	
PLOT DATE = 2/27/2026	DATE - 04/21/2025	REVISED -	

STATE OF ILLINOIS
DEPARTMENT OF TRANSPORTATION

SUPERSTRUCTURE DETAILS
STRUCTURE NO. 038-0008 (SB)

SCALE: SHEET 17 OF 43 SHEETS STA. TO STA.

F.A.I. RTE.	SECTION	COUNTY	TOTAL SHEETS	SHEET NO.
57	(38-4,38-5)BR,D,CR	IROQUOIS	437	241
		CONTRACT NO. 66M80		
		ILLINOIS FED. AID PROJECT		

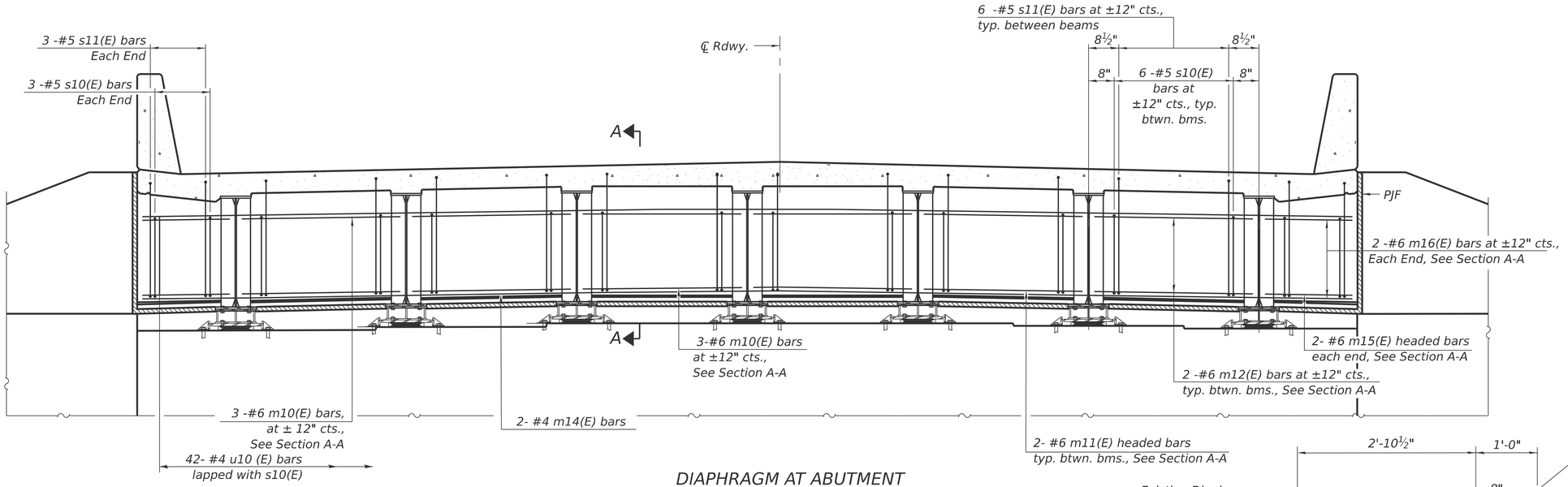

DIAPHRAGM AT ABUTMENT

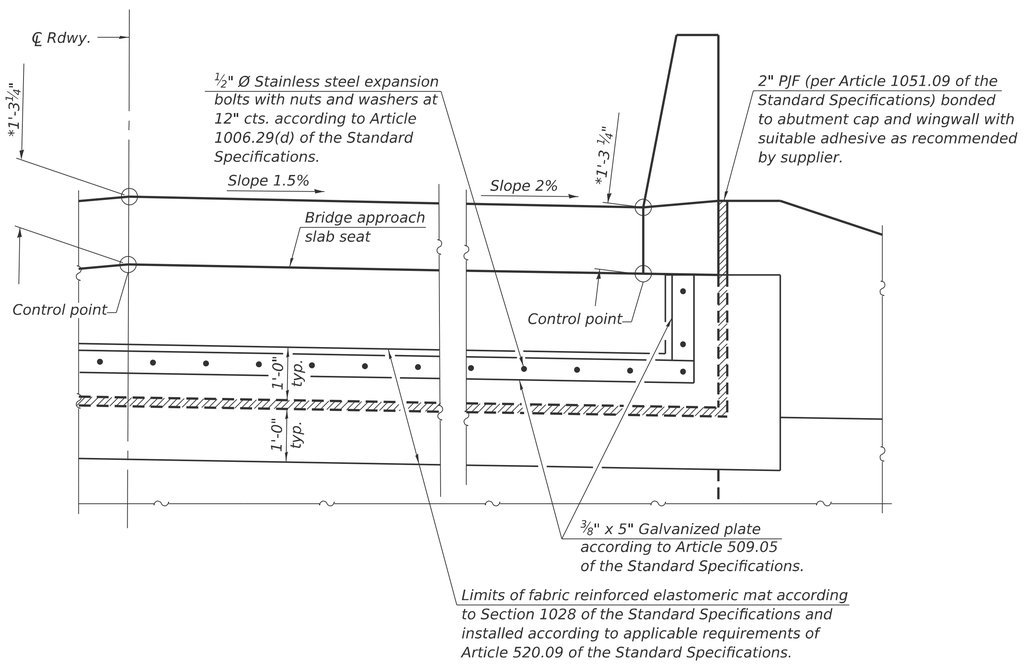

SECTION B-B

(Looking at back of abutment)

*Prior to grinding

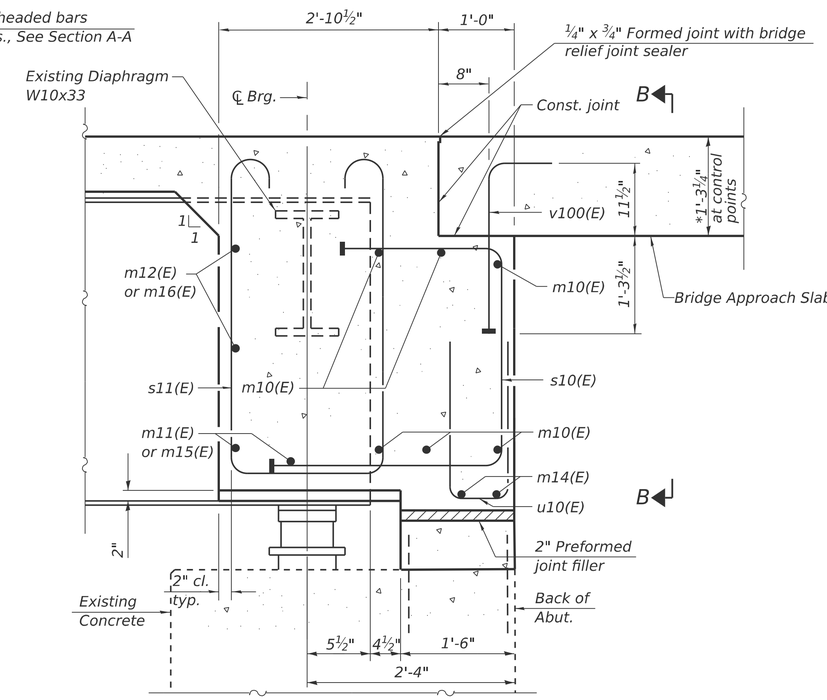

SECTION A-A

*Prior to grinding

Notes:

See sheet 17 of 43 for superstructure details and Bill of Material.

See sheet 2 of 43 for PJF details.

The approach slab seat shall have a constant slope determined from the control points shown.

Cost of fabric reinforced elastomeric mat, galvanized plate, stainless steel expansion bolts with nuts and washers and installation are included in the cost of Concrete Superstructure.

DIA-SB-0 4-4-2025

MODEL: Default
FILE NAME: G:\Users\6666501-d5-IDOT-I-57 Structure Projects-TP&W RR and 2nd St\Survey D366M80\SN038-0007_0008\Consultant_Data\Chamlin_2025\Design\0380007_0008-66M80-018-DIAPHRAGM_DETTS_0008.dgn

Chamlin & Associates

USER NAME = CHAMLIN	DESIGNED - PDF	REVISED -	
	DRAWN - LAG	REVISED -	
	CHECKED - JLS	REVISED -	
PLOT DATE = 2/26/2026	DATE - 04/21/2025	REVISED -	

STATE OF ILLINOIS
DEPARTMENT OF TRANSPORTATION

DIAPHRAGM DETAILS
STRUCTURE NO. 038-0008 (SB)

SCALE: SHEET 18 OF 43 SHEETS STA. TO STA.

F.A.I. RTE.	SECTION	COUNTY	TOTAL SHEETS	SHEET NO.
57	(38-4,38-5)BR,D,CR	IROQUOIS	437	242
		CONTRACT NO. 66M80		
		ILLINOIS	FED. AID PROJECT	

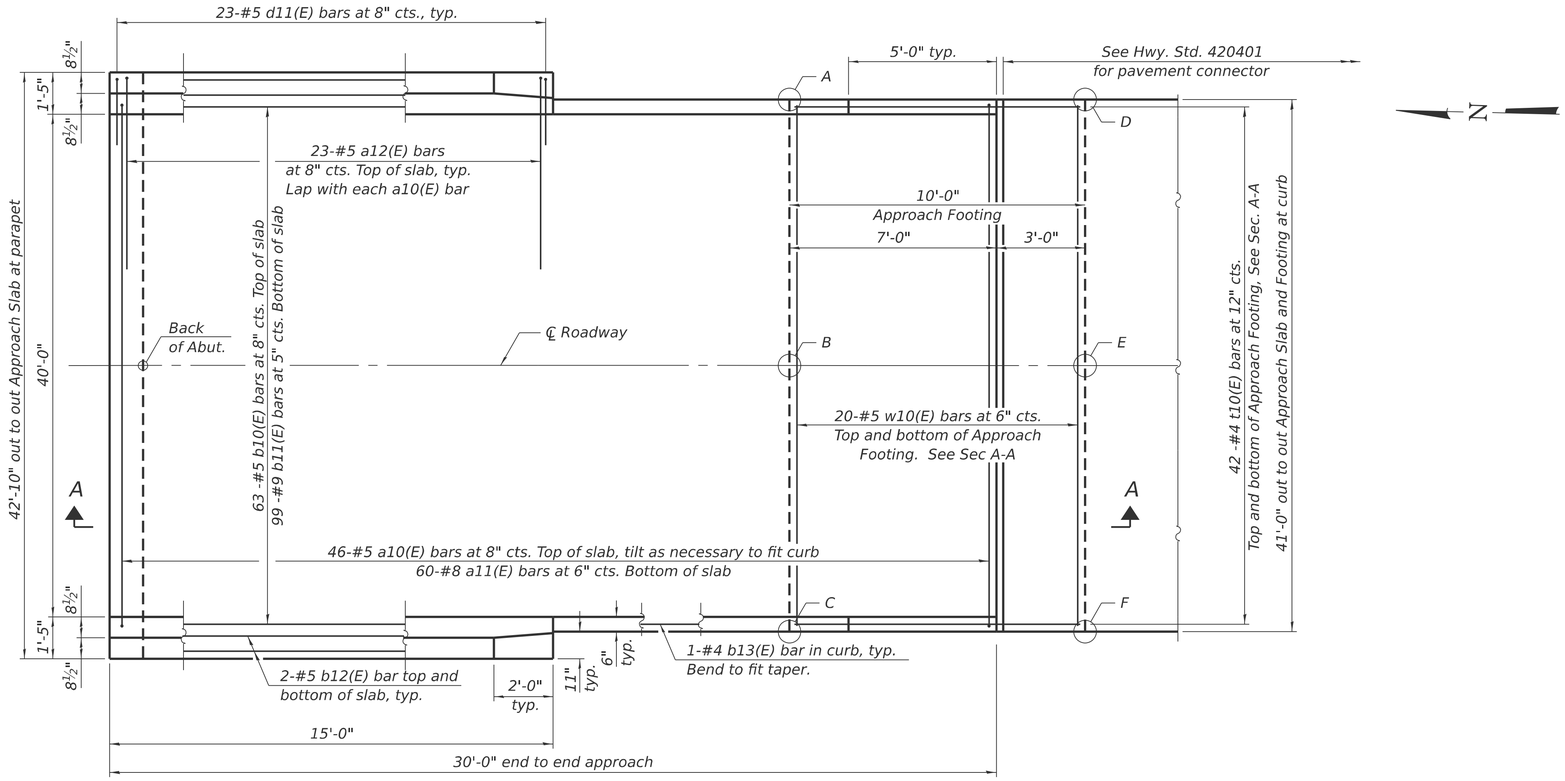

PLAN

(South approach slab shown; North approach slab similar by 180° rotation)

TOP AND BOTTOM ELEVATIONS FOR APPROACH FOOTING

North Approach			South Approach		
Point/ Location	Top	Bottom	Point/ Location	Top	Bottom
A - S.W.	663.14	662.31	A - N.E.	666.76	665.93
B - S.℄.	663.45	662.62	B - N.℄.	667.15	666.32
C - S.E.	663.06	662.23	C - N.W.	666.84	666.01
D - N.W.	662.87	662.04	D - S.E.	666.98	666.15
E - N.℄.	663.18	662.35	E - S.℄.	667.37	666.54
F - N.E.	662.79	661.96	F - S.W.	667.06	666.23

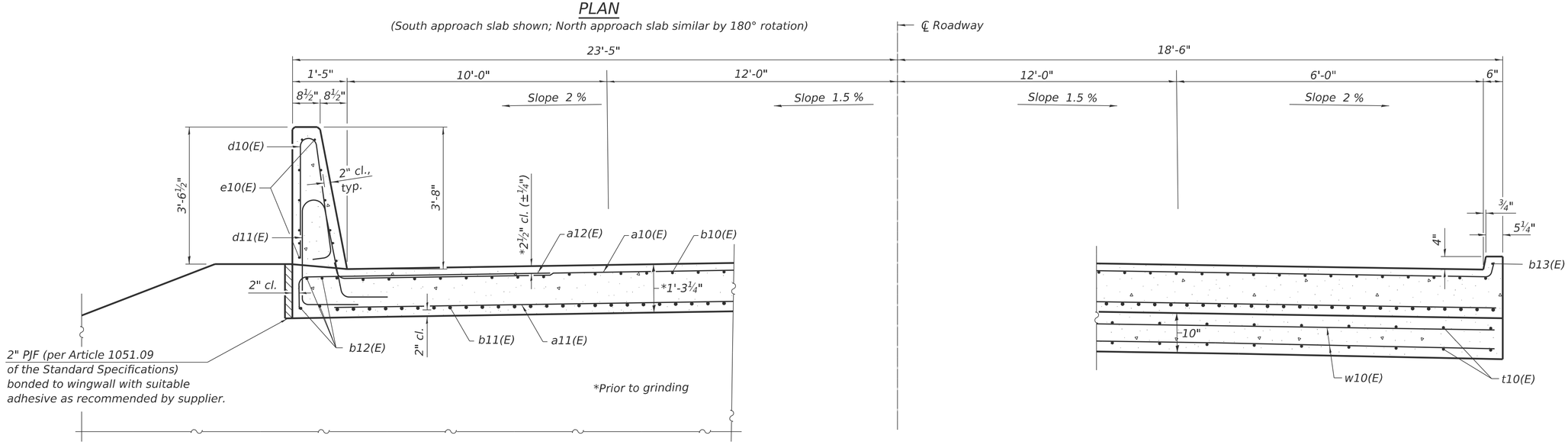

CROSS SECTION

(Looking South)

NEAR ABUTMENT

AT APPROACH FOOTING

BAIA-CIP-44CS-0

4-4-2025

MODEL: Default
FILE NAME: G:\Users\6\66501-05-IDOT-I-57 Structure Projects-TP&W RR and 2nd St\Survey D36M80\SN038-0007_0008\Consultant_Data\Chamlin_2025\Design\0380007_0008-66M80-019-APP_SLAB_DETS_0007.dgn

Chamlin & Associates

USER NAME = CHAMLIN	DESIGNED - PDF	REVISED -	
	DRAWN - LAG	REVISED -	
	CHECKED - JLS	REVISED -	
PLOT DATE = 2/26/2026	DATE - 04/21/2025	REVISED -	

STATE OF ILLINOIS
DEPARTMENT OF TRANSPORTATION

BRIDGE APPROACH SLAB DETAILS
STRUCTURE NO. 038-0007 (NB)

SCALE: | SHEET 19 OF 43 SHEETS | STA. | TO STA.

F.A.I. RTE.	SECTION	COUNTY	TOTAL SHEETS	SHEET NO.
57	(38-4,38-5)BR,D,CR	IROQUOIS	437	243
		CONTRACT NO. 66M80		
		ILLINOIS	FED. AID PROJECT	

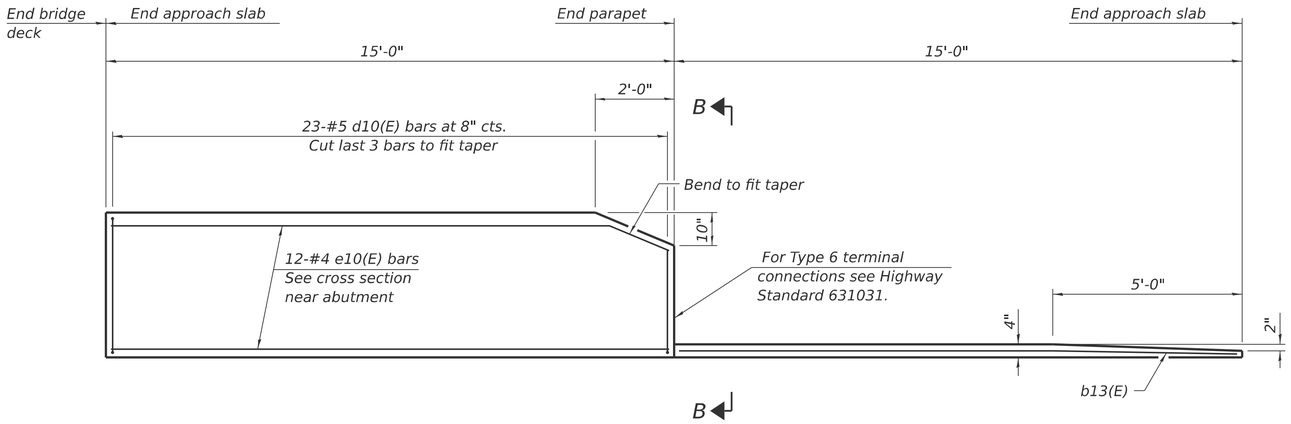

INSIDE ELEVATION OF PARAPET AND CURB

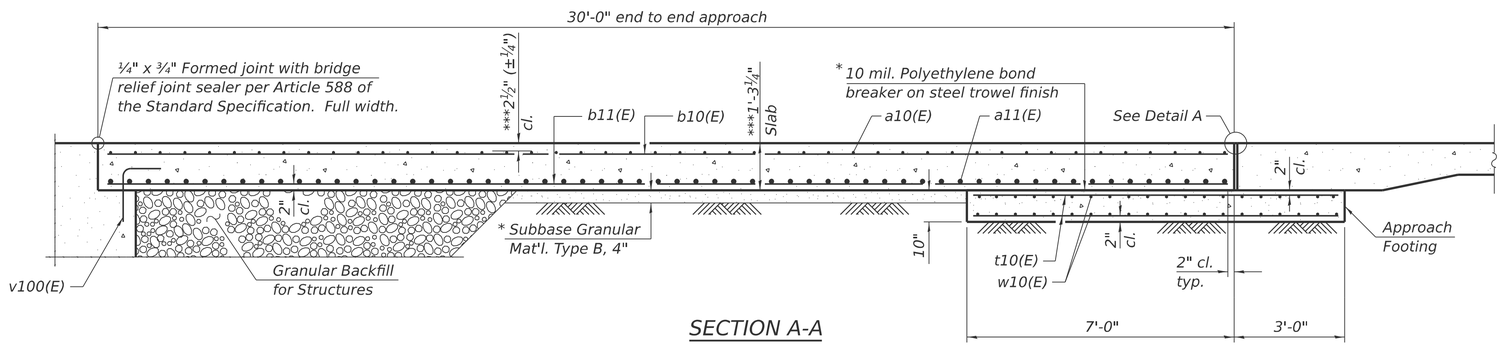

SECTION A-A

Notes:

The joint opening shall be adjusted for temperature per Article 520.04 of the Standard Specifications. However, since this detail is for jointless structures, the length of bridge used to calculate the adjustment shall be equal to half the total bridge length plus the length of the bridge approach slab.

Parapet concrete shall be paid for as Concrete Superstructure.

Approach slab shall be paid for as Concrete Superstructure (Approach Slab).

Approach footing concrete shall be paid for as Concrete Structures.

The approach footing maximum applied service bearing pressure (Qmax) = 2.0 ksf.

Cost of excavation for approach footing included with Concrete Structures.

For Granular Backfill for Structures and drainage treatment details, see sheet 2 of 43.

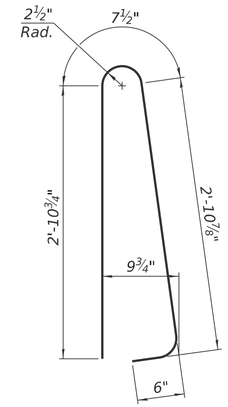

BAR d10(E)

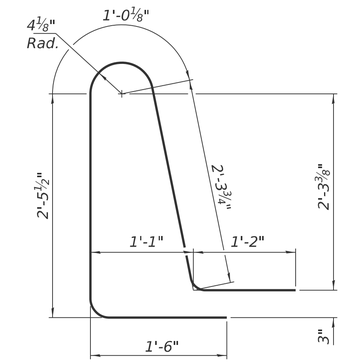

BAR d11(E)

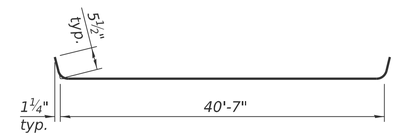

BAR a10(E)

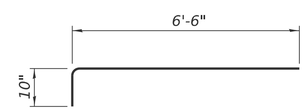

BAR a12(E)

TWO APPROACHES
BILL OF MATERIAL

Bar	No.	Size	Length	Shape
a10(E)	92	#5	41'-3"	
a11(E)	120	#8	40'-8"	
a12(E)	92	#5	7'-4"	
b10(E)	126	#5	29'-8"	
b11(E)	198	#9	29'-8"	
b12(E)	16	#5	14'-8"	
b13(E)	4	#4	14'-8"	
d10(E)	92	#5	7'-0"	
d11(E)	92	#5	8'-6"	
e10(E)	48	#4	14'-8"	
t10(E)	168	#4	9'-8"	
w10(E)	80	#5	40'-8"	
Concrete Superstructure			Cu. Yd.	8.3
Concrete Superstructure (Approach Slab)			Cu. Yd.	117.0
Concrete Structures			Cu. Yd.	25.2
Reinforcement Bars, Epoxy Coated			Pound	48,290

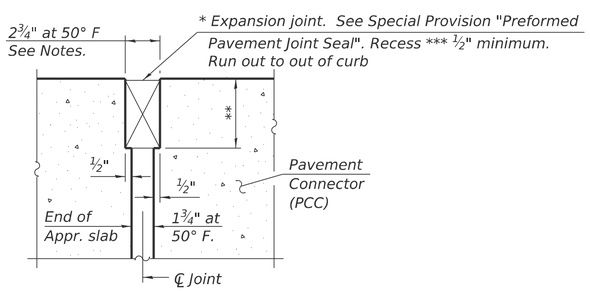

DETAIL A
(at Rt. ∠'s)

* Cost included with Concrete Superstructure (Approach Slab).

** Per manufacturer recommendations

*** Prior to grinding

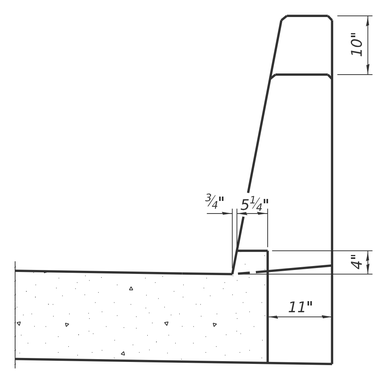

VIEW B-B

BAIA-CIP-44CS-0 4-4-2025

MODEL: Default
FILE NAME: G:\Users\6\66501-05-IDOT-I-57 Structure Projects-TP&W RR and 2nd St\Survey D36M80\SN038-0007_0008\Consultant_Data\Chamlin_2025\Design\0380007_0008-66M80-020-APP_SLAB_DETS_0007.dgn

Chamlin & Associates

USER NAME = CHAMLIN	DESIGNED - PDF	REVISED -	
	DRAWN - LAG	REVISED -	
	CHECKED - JLS	REVISED -	
PLOT DATE = 2/27/2026	DATE - 04/21/2025	REVISED -	

STATE OF ILLINOIS
DEPARTMENT OF TRANSPORTATION

BRIDGE APPROACH SLAB DETAILS
STRUCTURE NO. 038-0007 (NB)

SCALE: SHEET 20 OF 43 SHEETS STA. TO STA.

F.A.I. RTE.	SECTION	COUNTY	TOTAL SHEETS	SHEET NO.
57	(38-4,38-5)BR,D,CR	IROQUOIS	437	244

CONTRACT NO. 66M80
ILLINOIS FED. AID PROJECT

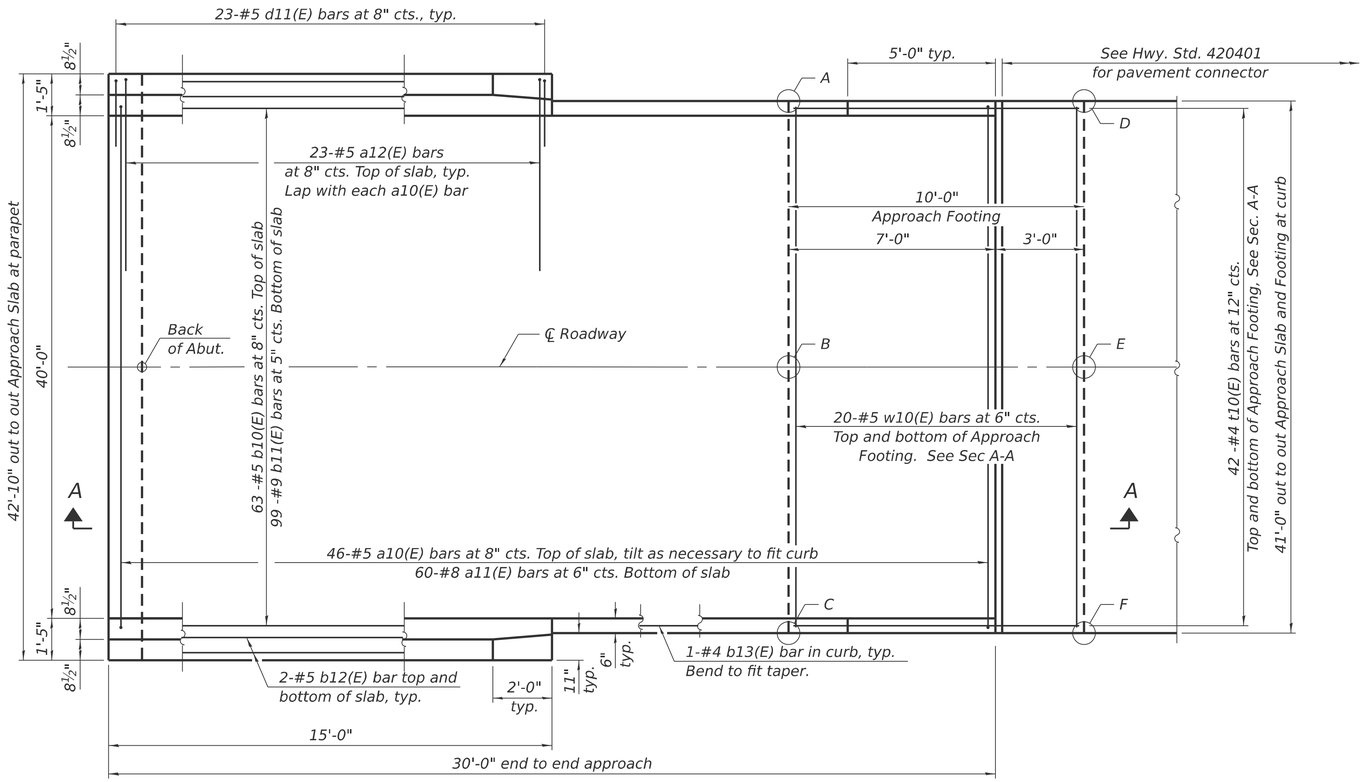

PLAN

(South approach slab shown; North approach slab similar by 180° rotation)

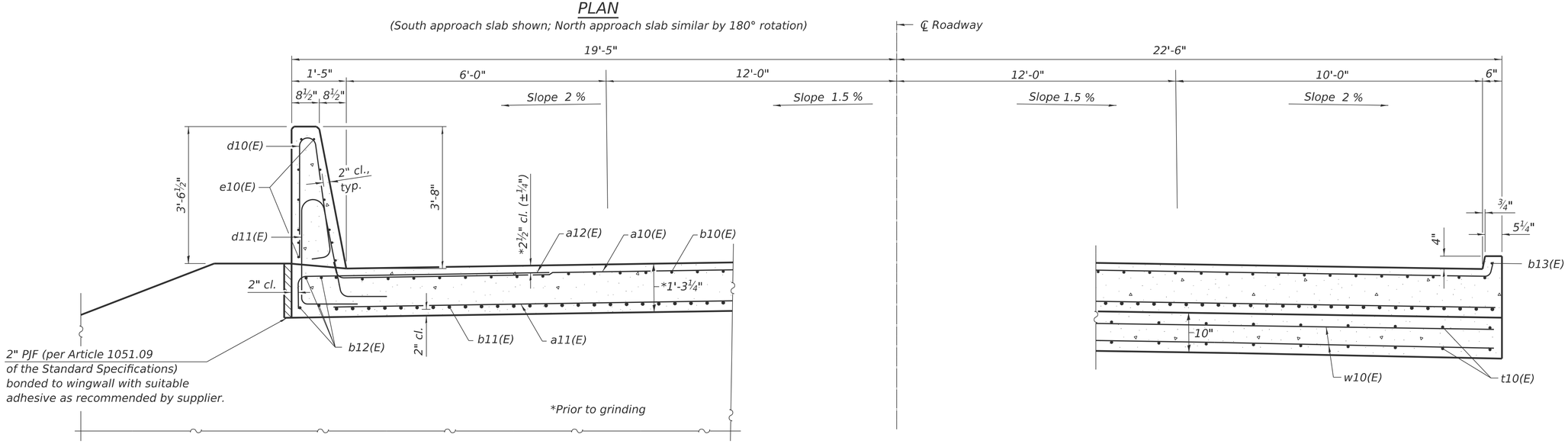

CROSS SECTION

(Looking South)

NEAR ABUTMENT

AT APPROACH FOOTING

TOP AND BOTTOM ELEVATIONS FOR APPROACH FOOTING

North Approach			South Approach		
Point/ Location	Top	Bottom	Point/ Location	Top	Bottom
A - S.W.	663.21	662.37	A - N.E.	666.89	666.06
B - S.℄	663.60	662.76	B - N.℄.	667.20	666.37
C - S.E.	663.29	662.45	C - N.W.	666.81	665.98
D - N.W.	662.97	662.13	D - S.E.	667.11	666.28
E - N.℄.	663.36	662.52	E - S.℄.	667.42	666.59
F - N.E.	663.05	662.21	F - S.W.	661.03	666.20

BAIA-CIP-44CS-0

4-4-2025

MODEL: Default
FILE NAME: G:\Users\66501-05-IDOT-I-57 Structure Projects-TP&W RR and 2nd St\Survey D36M80\SN038-0007_0008\Consultant_Data\Chamlin_2025\Design\0380007_0008-66M80-021-APP_SLAB_DETS_0008.dgn

Chamlin & Associates

USER NAME = CHAMLIN	DESIGNED - PDF	REVISED -	
	DRAWN - LAG	REVISED -	
	CHECKED - JLS	REVISED -	
PLOT DATE = 2/27/2026	DATE - 04/21/2025	REVISED -	

STATE OF ILLINOIS
DEPARTMENT OF TRANSPORTATION

BRIDGE APPROACH SLAB DETAILS
STRUCTURE NO. 038-0008 (SB)

SCALE: | SHEET 21 OF 43 SHEETS | STA. | TO STA.

F.A.I. RTE.	SECTION	COUNTY	TOTAL SHEETS	SHEET NO.
57	(38-4,38-5)BR,D,CR	IROQUOIS	437	245
		CONTRACT NO. 66M80		
		ILLINOIS	FED. AID PROJECT	

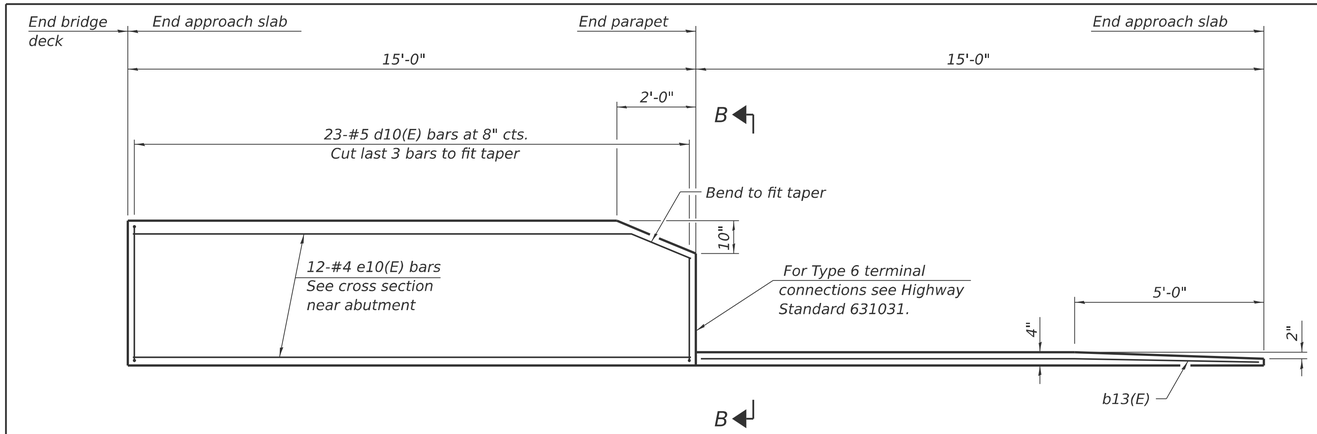

INSIDE ELEVATION OF PARAPET AND CURB

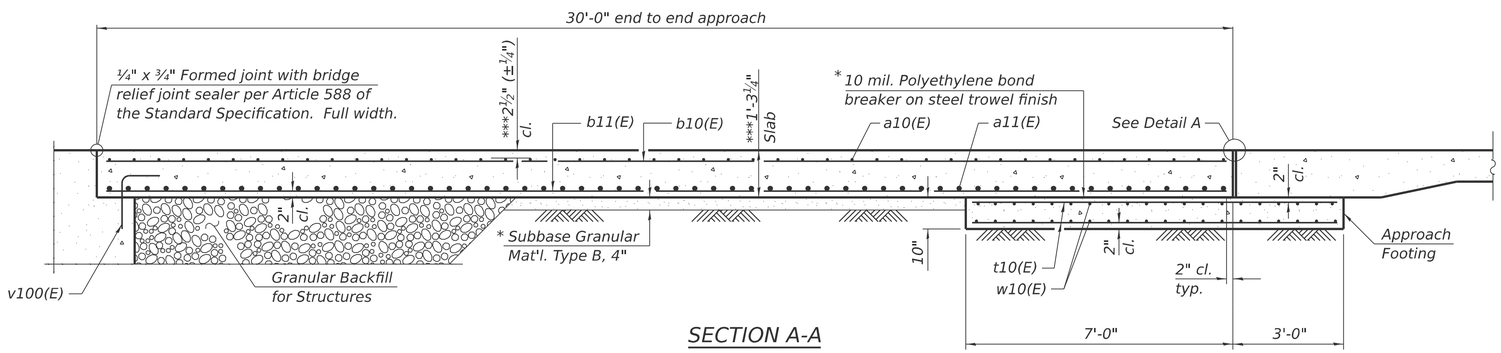

SECTION A-A

Notes:

The joint opening shall be adjusted for temperature per Article 520.04 of the Standard Specifications. However, since this detail is for jointless structures, the length of bridge used to calculate the adjustment shall be equal to half the total bridge length plus the length of the bridge approach slab.

Parapet concrete shall be paid for as Concrete Superstructure.

Approach slab shall be paid for as Concrete Superstructure (Approach Slab).

Approach footing concrete shall be paid for as Concrete Structures.

The approach footing maximum applied service bearing pressure (Qmax) = 2.0 ksf.

Cost of excavation for approach footing included with Concrete Structures.

For Granular Backfill for Structures and drainage treatment details, see sheet 2 of 43.

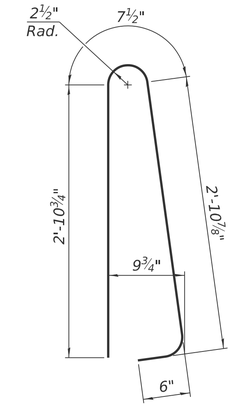

BAR d10(E)

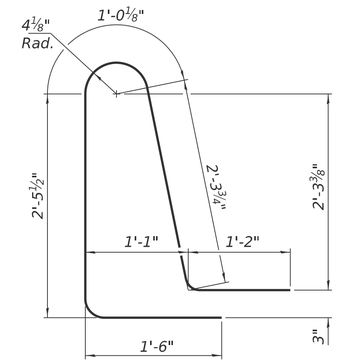

BAR d11(E)

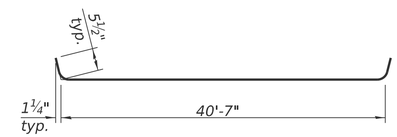

BAR a10(E)

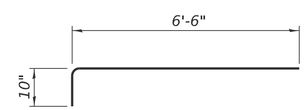

BAR a12(E)

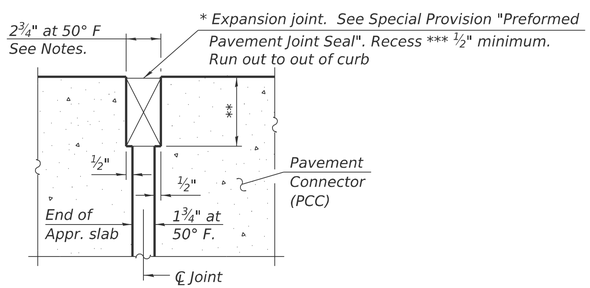

DETAIL A

(at Rt. ∠'s)

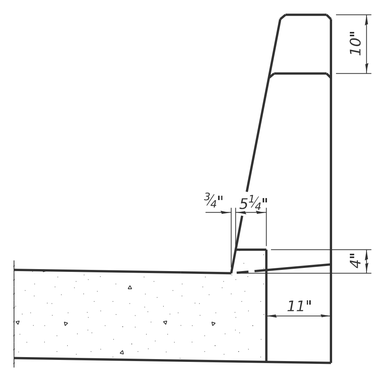

VIEW B-B

TWO APPROACHES

BILL OF MATERIAL

Bar	No.	Size	Length	Shape
a10(E)	92	#5	41'-3"	
a11(E)	120	#8	40'-8"	
a12(E)	92	#5	7'-4"	
b10(E)	126	#5	29'-8"	
b11(E)	198	#9	29'-8"	
b12(E)	16	#5	14'-8"	
b13(E)	4	#4	14'-8"	
d10(E)	92	#5	7'-0"	
d11(E)	92	#5	8'-6"	
e10(E)	48	#4	14'-8"	
t10(E)	168	#4	9'-8"	
w10(E)	80	#5	40'-8"	
Concrete Superstructure			Cu. Yd.	8.3
Concrete Superstructure (Approach Slab)			Cu. Yd.	117.0
Concrete Structures			Cu. Yd.	25.2
Reinforcement Bars, Epoxy Coated			Pound	48,290

* Cost included with Concrete Superstructure (Approach Slab).

** Per manufacturer recommendations

*** Prior to grinding

BAIA-CIP-44CS-0 4-4-2025

MODEL: Default
FILE NAME: G:\Users\66501-05-IDOT-I-57 Structure Projects-TP&W RR and 2nd St\Survey D366M80\SN\38-0007_0008\Consultant_Data\Chamlin_2025\Design\0380007_0008-66M80-022-APP_SLAB_DETS_0008.dgn

Chamlin & Associates

USER NAME = CHAMLIN	DESIGNED - PDF	REVISED -	
	DRAWN - LAG	REVISED -	
	CHECKED - JLS	REVISED -	
PLOT DATE = 2/27/2026	DATE - 04/21/2025	REVISED -	

STATE OF ILLINOIS
DEPARTMENT OF TRANSPORTATION

BRIDGE APPROACH SLAB DETAILS
STRUCTURE NO. 038-0008 (SB)

SCALE: SHEET 22 OF 43 SHEETS STA. TO STA.

F.A.I. RTE.	SECTION	COUNTY	TOTAL SHEETS	SHEET NO.
57	(38-4,38-5)BR,D,CR	IROQUOIS	437	246
		CONTRACT NO. 66M80		
		ILLINOIS FED. AID PROJECT		

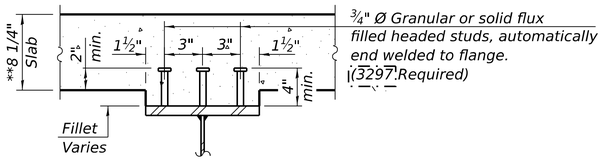

SECTION A-A

**Prior to grinding

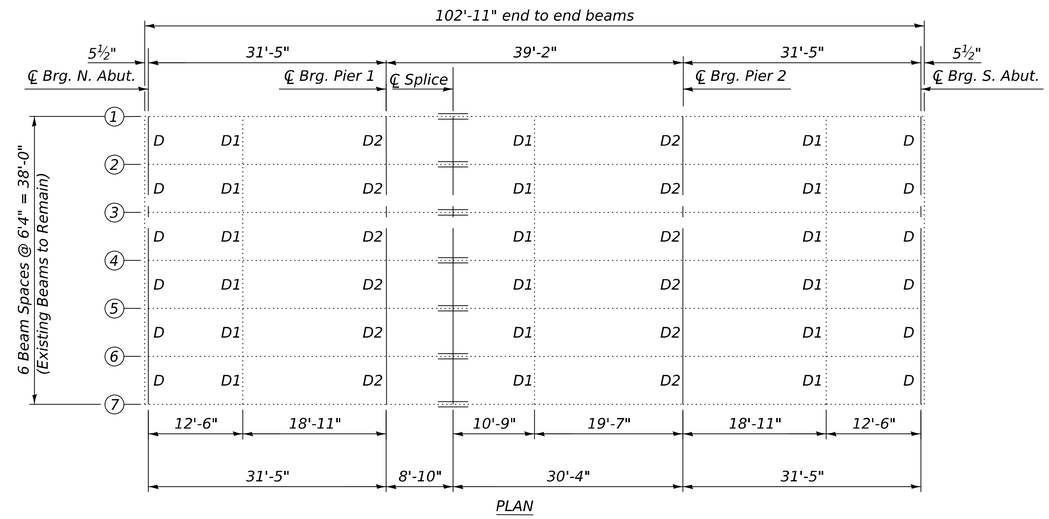

PLAN

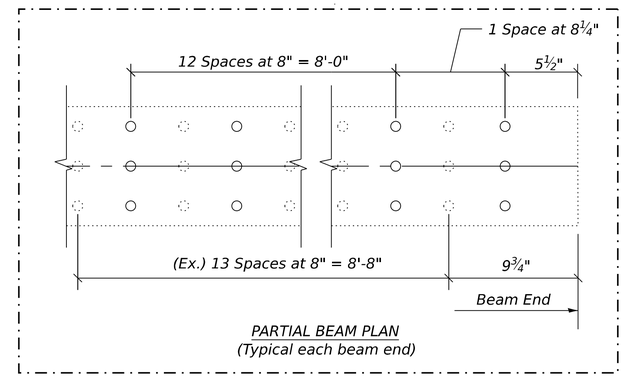

PARTIAL BEAM PLAN
(Typical each beam end)

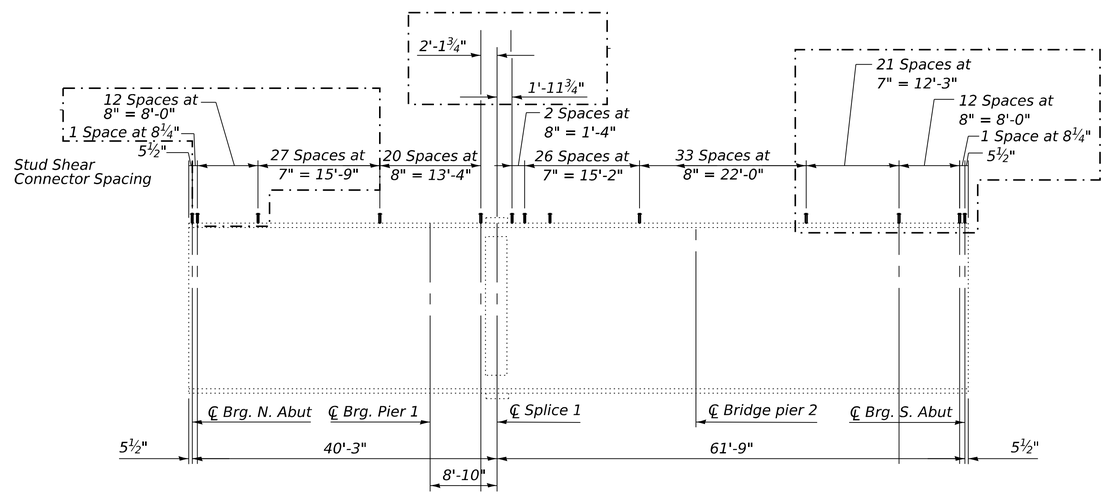

BEAM ELEVATION
(All beams are W24X76)

Notes:

Existing Diaphram designations D, D1 & D2 are shown for reference only, from existing plans.
All Existing diaphrams shall remain in place.
Existing W24x76 beams are to remain in place.

Cast included in Removal of Existing Concrete Deck.

MODEL: Default
FILE NAME: G:\Users\6\66501-05-IDOT-I-57 Structure Projects-TP&W RR and 2nd St\Survey D36\M80\SN038-0007_0008\Consultant_Data\Chamlin_2025\Design\0380007_0008-66M80-023-STL_FRAM_PLN_0007.dgn

Chamlin & Associates

USER NAME = CHAMLIN	DESIGNED - PDF	REVISED - 1 05/12/2026 PDF	
	DRAWN - LAG	REVISED -	
	CHECKED - JLS	REVISED -	
PLOT DATE = 5/14/2026	DATE - 04/21/2025	REVISED -	

STATE OF ILLINOIS
DEPARTMENT OF TRANSPORTATION

STEEL FRAMING PLAN
STRUCTURE NO. 038-0007 (NB)

SCALE: | SHEET 23 OF 43 SHEETS | STA. | TO STA.

F.A.I. RTE.	SECTION	COUNTY	TOTAL SHEETS	SHEET NO.
57	(38-4, 38-5) BR, D, CR	IROQUOIS	437	247
		CONTRACT NO. 66M80		
		ILLINOIS	FED. AID PROJECT	

REV. 5/28/26

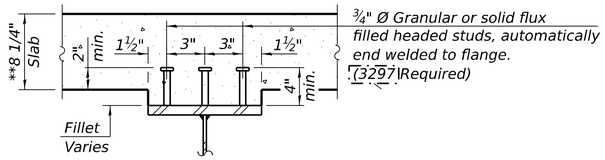

SECTION A-A

**Prior to grinding

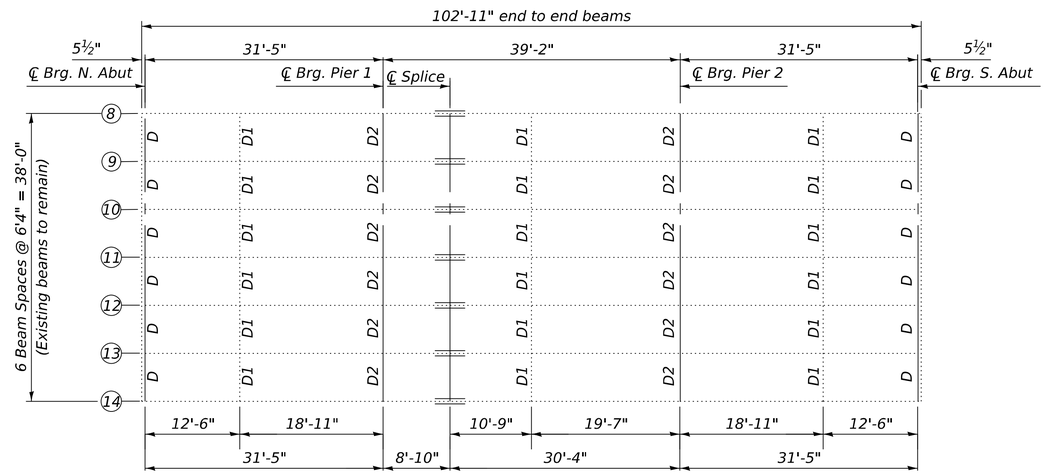

PLAN

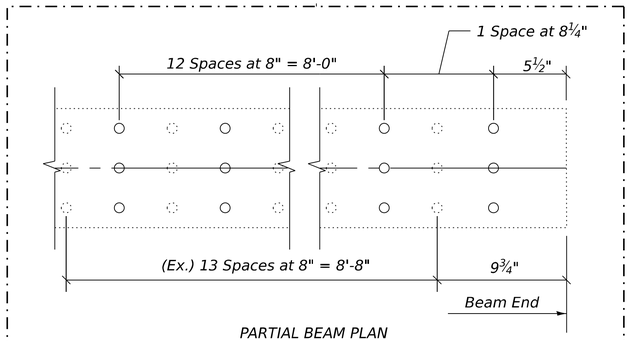

PARTIAL BEAM PLAN
(Typical each beam end)

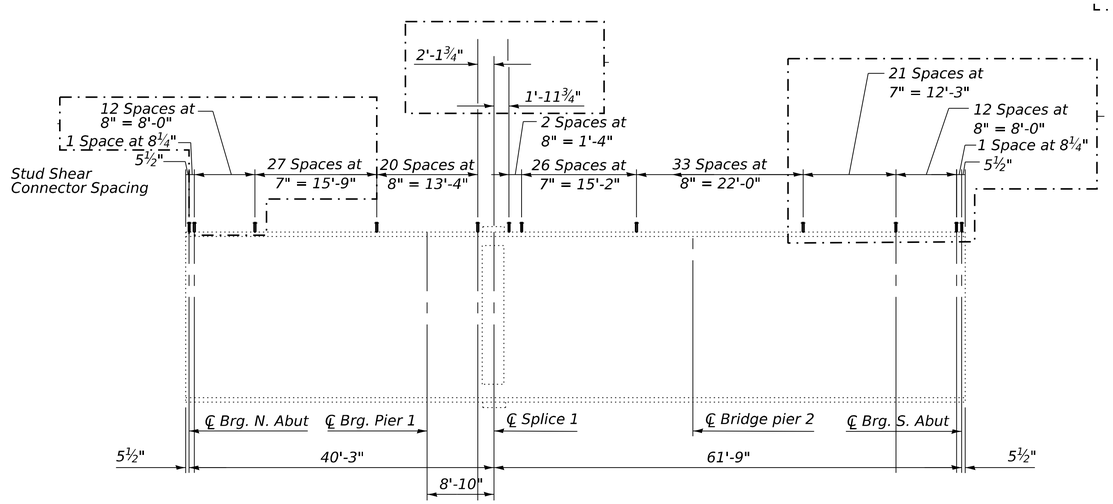

BEAM ELEVATION
(All beams are W24X76)

Notes:

Existing Diaphram designations D, D1 & D2 are shown for reference only, from existing plans. All Existing diaphrams shall remain in place. Existing W24x76 beams are to remain in place.

Cost included in Removal of Existing Concrete Deck.

MODEL: Default
FILE NAME: G:\Users\66501-05-IDOT-I-57 Structure Projects-TP&W RR and 2nd St\Survey D366M80\SN038-0007_0008\Consultant_Data\Chamlin_2025\Design\0380007_0008-66M80-024-STL_FRAM_PLN_0008.dgn

Chamlin & Associates	USER NAME = CHAMLIN	DESIGNED - PDF	REVISED - 1 05/12/2026 PDF	STATE OF ILLINOIS DEPARTMENT OF TRANSPORTATION	STEEL FRAMING PLAN STRUCTURE NO. 038-0008 (SB)	F.A.I. RTE.	SECTION	COUNTY	TOTAL SHEETS / SHEET NO.
		DRAWN - LAG	REVISED -			57	(38-4, 38-5) BR, D, CR	IROQUOIS	437 / 248
		CHECKED - JLS	REVISED -					CONTRACT NO. 66M80	
	PLOT DATE = 5/14/2026	DATE - 04/21/2025	REVISED -		SCALE: SHEET 24 OF 43 SHEETS STA. TO STA.		ILLINOIS	FED. AID PROJECT	

REV. 5/28/26

INTERIOR GIRDER MOMENT TABLE					
		0.4 Sp. 1 0.6 Sp. 3	Pier 1	0.5 Sp. 2	PIER 2
I_s	(in^4)	2100	2100	2100	2100
$I_c(n)$	(in^4)	7469.6	3262.2	7469.6	3262.2
$I_c(3n)$	(in^4)	5712.7	3262.2	5712.7	3262.2
S_s	(in^3)	175.8	175.8	175.8	175.8
$S_c(n)$	(in^3)	297.5	218.1	297.5	218.1
$S_c(3n)$	(in^3)	269.2	218.1	269.2	218.1
Z	(in^3)	175.8	175.8	175.8	175.8
w_{DL}	(k/')	0.734	0.734	0.734	0.734
M_{DL}	('k)	49.9	92.8	48.1	92.8
S_{DL}	(k/')	0.3	0.3	0.3	0.3
M_{SDL}	('k)	20.8	38.8	20.1	38.8
M_{LL}	('k)	156.3	118.3	156.7	118.3
M_{IM}	('k)	46.9	35.5	47.0	35.5
$\frac{5}{3}[M_{LL}+M_{IM}]$	('k)	338.6	256.2	339.5	256.2
M_a	('k)	532.2	504.1	530.0	504.1
M_u	('k)	901.8	-	915.8	-
$f_{s\ DL}$ non-comp	(ksi)	3.4	6.3	3.3	6.3
$f_{s\ DL}$ (comp)	(ksi)	0.9	2.1	0.9	2.1
f_s ($\frac{5}{3}M_{LL}+M_{IM}$)	(ksi)	13.7	14.1	13.7	14.1
f_s (Overload)	(ksi)	18.0	22.6	17.9	22.6
f_s (Total)	(ksi)	-	29.3	-	29.3
VR	(k)	31.0	50.0	32.0	50.0

GIRDER REACTION TABLE					
		N Abut.	Pier 1	Pier 2	S. Abut
R_{DL}	(k)	* 33.0	41.0	41.0	* 33.0
R_{LL}	(k)	31.7	40.5	40.5	31.7
R_{IM}	(k)	9.5	12.1	12.1	9.5
R_{Total}	(k)	132.1	167.2	167.2	132.1

* RDL includes service reaction due to weight of approach slab and parapet on approach

I_s, S_s: Non-composite moment of inertia and section modulus of the steel section used for computing f s (Total and Overload) due to non-composite dead loads ($in.^4$ and $in.^3$).

$I_c(n)$, $S_c(n)$: Composite moment of inertia and section modulus of the steel and deck based upon the modular ratio, "n", used for computing f s (Total and Overload) due to long-term composite live loads ($in.^4$ and $in.^3$).

$I_c(3n)$, $S_c(3n)$: Composite moment of inertia and section modulus of the steel and deck based upon 3 times the modular ratio, "3n", used for computing f s (Total and Overload) due to long-term composite (superimposed) dead loads ($in.^4$ and $in.^3$).

Z: Plastic Section Modulus of the steel section in non-composite areas ($in.^3$).

w_{DL}: Un-factored non-composite dead load (kip-ft.).

M_{DL}: Un-factored moment due to non-composite dead load (kip-ft.).

S_{DL}: Un-factored long-term composite (superimposed) dead load (kips/ft.).

M_{SDL}: Un-factored moment due to long-term composite (superimposed) dead load (kip-ft.).

M_{LL}: Un-factored live load moment (kip-ft.).

M_{IM}: Un-factored moment due to impact (kip-ft.).

M a: Factored design moment (kip-ft.).

$1.3\ [M_{DL}+M_{SDL}+\frac{5}{3}(M_{LL}+M_I)]$

M u: Compact composite moment capacity according to AASHTO LFD 10.50.1.1 or compact non-composite moment capacity according to AASHTO LFD 10.48.1 (kip-ft.).

f s (Overload): Sum of stresses as computed from the moments below (ksi).

$[M_{DL}+M_{SDL}+\frac{5}{3}(M_{LL}+M_I)]$

f s (Total): Sum of stresses as computed from the moments below on non-compact section (ksi).

$1.3\ [M_{DL}+M_{SDL}+\frac{5}{3}(M_{LL}+M_I)]$

VR: Maximum $_{LL}$ + impact shear range within the composite portion of the span for stud shear connector design (kips).

MODEL: Default
FILE NAME: G:\Users\666501-d5-IDOT\I-57 Structure Projects-TP&W RR and 2nd St\Survey D366M80\SN038-0007_0008\Consultant_Data\Chamlin_2025\Design\0380007_0008-66M80-025-STR_STL_DETTS.dgn

Chamlin & Associates

USER NAME = CHAMLIN	DESIGNED - PDF	REVISED - 1 05/12/2026 PDF	
	DRAWN - LAG	REVISED -	
	CHECKED - JLS	REVISED -	
PLOT DATE = 5/13/2026	DATE - 04/21/2025	REVISED -	

STATE OF ILLINOIS
DEPARTMENT OF TRANSPORTATION

STRUCTURAL STEEL DETAILS
STRUCTURE NO. 038-0007 (NB) & 038-0008 (SB)

SCALE: | SHEET 25 OF 43 SHEETS | STA. | TO STA.

F.A.I. RTE.	SECTION	COUNTY	TOTAL SHEETS	SHEET NO.
57	(38-4, 38-5) BR, D, CR	IROQUOIS	437	249
		CONTRACT NO. 66M80		
		ILLINOIS	FED. AID PROJECT	

REV. 5/28/26

TABLE OF FILL PLATE THICKNESSES

	Beam 1	Beam 2	Beam 3	Beam 4	Beam 5	Beam 6	Beam 7
N. Abut. (038-0007)	0"	0"	1/4"	1/4"	0"	1/8"	0"

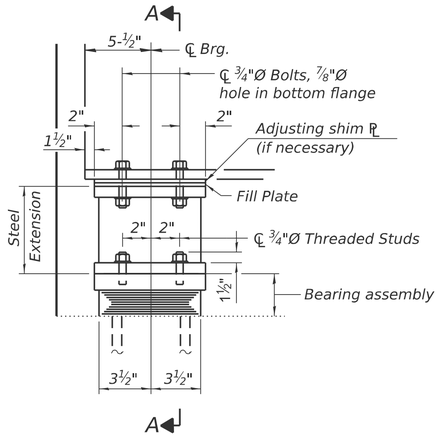

ELEVATION AT ABUT.

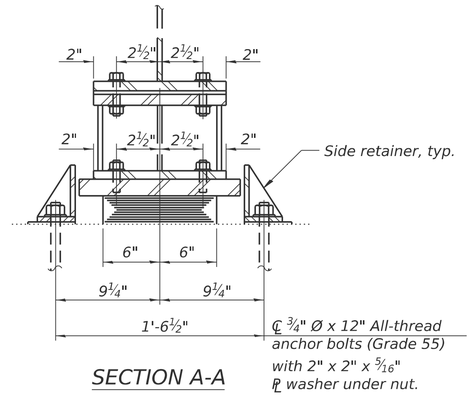

SECTION A-A

TYPE I ELASTOMERIC EXP. BRG.

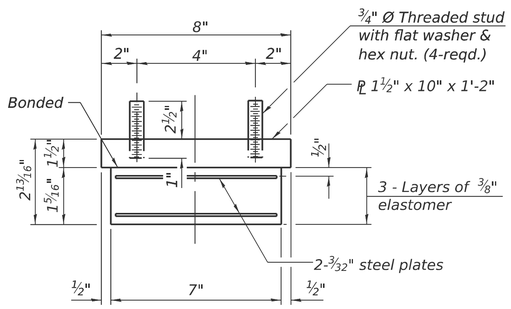

BEARING ASSEMBLY

Notes:
Side retainers and stainless steel plates shall be included in the cost of Elastomeric Bearing Assembly, Type I.
Steel Extensions, fill plates, shim plates, and connection bolts are included with Furnishing and Erecting Structural Steel.
Anchor bolts and side retainers at all supports shall be installed as each member is erected unless an equivalent temporary means of lateral restraint is used.
The steel extensions, fill plates, and structural steel plates of the Bearing Assembly shall conform to the requirements of AASHTO M270 Grade 50.
Two 1/8 in. adjusting shims shall be provided for each bearing in addition to all other plates or shims and placed shown on bearing details.
Drilled and set anchor bolts shall be installed according to Article 521.06 of the Standard Specifications.

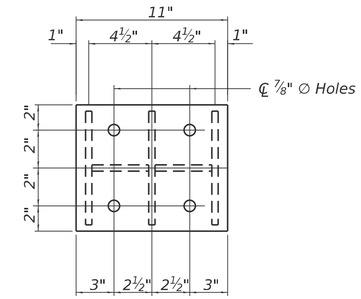

PLAN - TOP EXTENSION PLATE

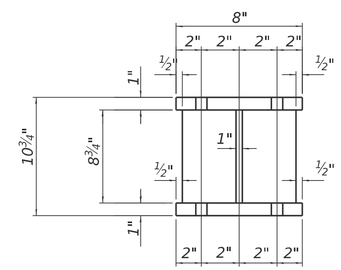

SECTION B-B

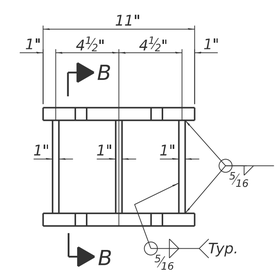

STEEL EXTENSION DETAIL

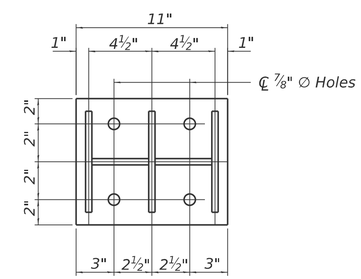

PLAN - BOTTOM EXTENSION PLATE

Note:
Shim plates shall not be placed under bearing assembly.

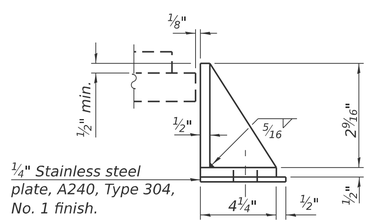

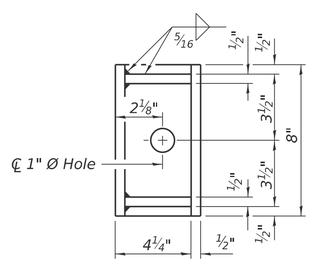

SIDE RETAINER

Equivalent rolled angle with stiffeners will be allowed in lieu of welded plates.

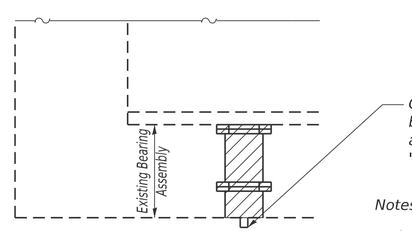

EXISTING BEARING REMOVAL DETAIL

Core and remove existing anchor bolts. Grind bearing surface level as necessary. Cost is included in "Jack and Remove Existing Bearings".

Notes for Jack and Remove Existing Bearings:

The Contractor shall submit, for approval by the Engineer, plans for the jacking and removing the existing bearings at the abutments prior to commencing any related work.
Jacking and removal of existing bearings shall be done after the existing concrete deck is removed.
The new bearings shall be in place and the jacks lowered prior to pouring the new deck.
The dead load reaction per beam (weight of steel only) at each abutment is 1k.
The minimum jack capacity is 2k per beam.

BILL OF MATERIAL

Item	Unit	Total
Elastomeric Bearing Assembly Type I	Each	7
Anchor Bolts, 3/4"	Each	14
Jack and Remove Existing Bearings	Each	7
Furnishing and Erecting Structural Steel	Pound	990

MODEL: Default
FILE NAME: G:\Users\6\66501-05-IDOT-I-57 Structure Projects-TP&W RR and 2nd St\Survey D366M80\SN038-0007_0008\Consultant_Data\Chamlin_2025\Design\0380007_0008-66M80-026-ABUT_BRG_DETS.dgn

Chamlin & Associates

USER NAME = CHAMLIN	DESIGNED - PDF	REVISED -	
	DRAWN - LAG	REVISED -	
	CHECKED - JLS	REVISED -	
PLOT DATE = 2/27/2026	DATE - 04/21/2025	REVISED -	

STATE OF ILLINOIS
DEPARTMENT OF TRANSPORTATION

NORTH ABUTMENT BEARING DETAILS
STRUCTURE NO. 038-0007 (NB)

SCALE: | SHEET 26 OF 43 SHEETS | STA. | TO STA.

F.A.I. RTE.	SECTION	COUNTY	TOTAL SHEETS	SHEET NO.
57	(38-4,38-5)BR,D,CR	IROQUOIS	437	250

CONTRACT NO. 66M80
ILLINOIS | FED. AID PROJECT

TABLE OF FILL PLATE THICKNESSES

	Beam 1	Beam 2	Beam 3	Beam 4	Beam 5	Beam 6	Beam 7
S. Abut. (038-0007)	1/8"	0"	1/4"	1/4"	0"	1/8"	1/8"

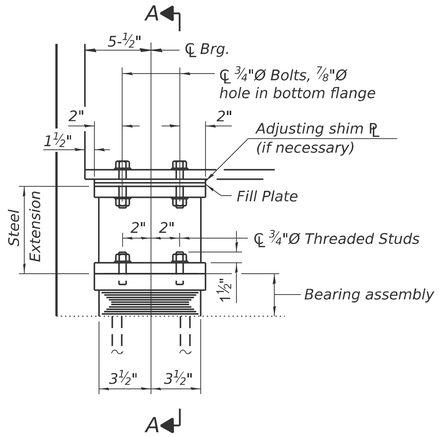

ELEVATION AT ABUT.

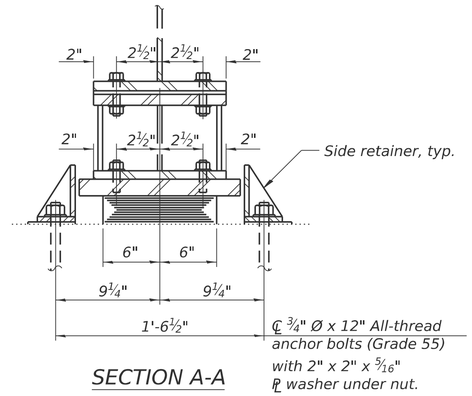

SECTION A-A

TYPE I ELASTOMERIC EXP. BRG.

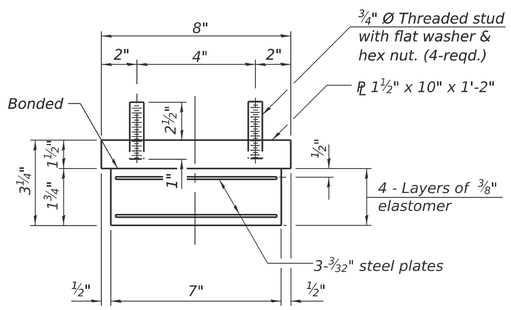

BEARING ASSEMBLY

Notes:
Side retainers and stainless steel plates shall be included in the cost of Elastomeric Bearing Assembly, Type I.
Steel Extensions, fill plates, shim plates, and connection bolts are included with Furnishing and Erecting Structural Steel.
Anchor bolts and side retainers at all supports shall be installed as each member is erected unless an equivalent temporary means of lateral restraint is used.
The steel extensions, fill plates, and structural steel plates of the Bearing Assembly shall conform to the requirements of AASHTO M270 Grade 50.
Two 1/8 in. adjusting shims shall be provided for each bearing in addition to all other plates or shims and placed shown on bearing details.
Drilled and set anchor bolts shall be installed according to Article 521.06 of the Standard Specifications.

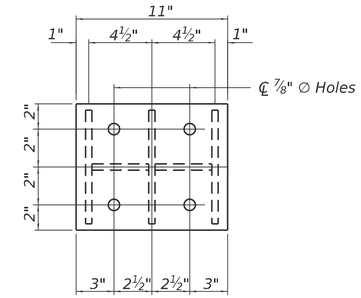

PLAN - TOP EXTENSION PLATE

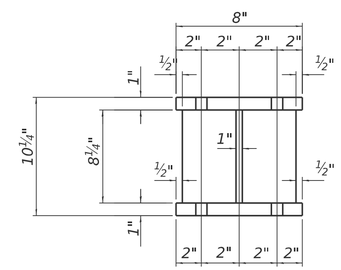

SECTION B-B

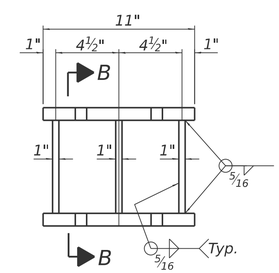

STEEL EXTENSION DETAIL

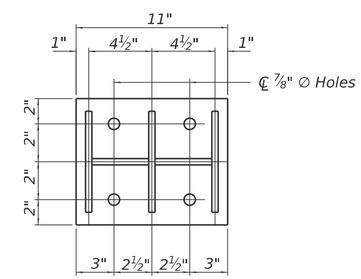

PLAN - BOTTOM EXTENSION PLATE

Note:
Shim plates shall not be placed under bearing assembly.

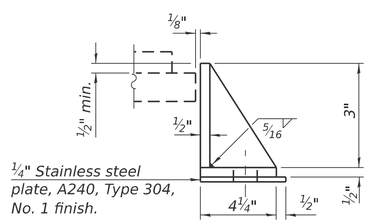

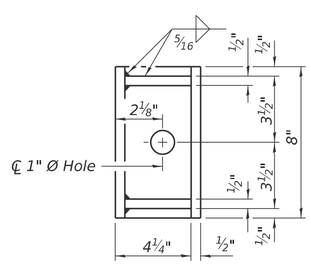

SIDE RETAINER

Equivalent rolled angle with stiffeners will be allowed in lieu of welded plates.

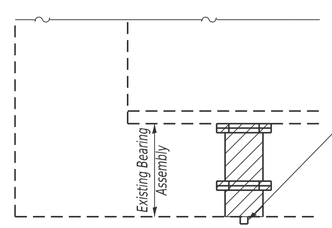

EXISTING BEARING REMOVAL DETAIL

Core and remove existing anchor bolts. Grind bearing surface level as necessary. Cost is included in "Jack and Remove Existing Bearings".

Notes for Jack and Remove Existing Bearings:

The Contractor shall submit, for approval by the Engineer, plans for the jacking and removing the existing bearings at the abutments prior to commencing any related work.
Jacking and removal of existing bearings shall be done after the existing concrete deck is removed.
The new bearings shall be in place and the jacks lowered prior to pouring the new deck.
The dead load reaction per beam (weight of steel only) at each abutment is 1k.
The minimum jack capacity is 2k per beam.

BILL OF MATERIAL

Item	Unit	Total
Elastomeric Bearing Assembly Type I	Each	7
Anchor Bolts, 3/4"	Each	14
Jack and Remove Existing Bearings	Each	7
Furnishing and Erecting Structural Steel	Pound	1,000

MODEL: Default
FILE NAME: G:\Users\6\66501-d5-IDOT-I-57 Structure Projects-TP&W RR and 2nd St\Survey D366M80\SN038-0007_0008\Consultant_Data\Chamlin_20250\Design\0380007_0008-66M80-027-ABUT_BRG_DETS.dgn

Chamlin & Associates

USER NAME = CHAMLIN	DESIGNED - PDF	REVISED -	
	DRAWN - LAG	REVISED -	
	CHECKED - JLS	REVISED -	
PLOT DATE = 2/27/2026	DATE - 04/21/2025	REVISED -	

STATE OF ILLINOIS
DEPARTMENT OF TRANSPORTATION

SOUTH ABUTMENT BEARING DETAILS
STRUCTURE NO. 038-0007 (NB)

SCALE: | SHEET 27 OF 43 SHEETS | STA. | TO STA.

F.A.I. RTE.	SECTION	COUNTY	TOTAL SHEETS	SHEET NO.
57	(38-4,38-5)BR,D,CR	IROQUOIS	437	251

CONTRACT NO. 66M80
ILLINOIS | FED. AID PROJECT

TABLE OF FILL PLATE THICKNESSES

	Beam 1	Beam 2	Beam 3	Beam 4	Beam 5	Beam 6	Beam 7
N. Abut. (038-0008)	0"	1/8"	0"	1/8"	1/4"	1/8"	0"

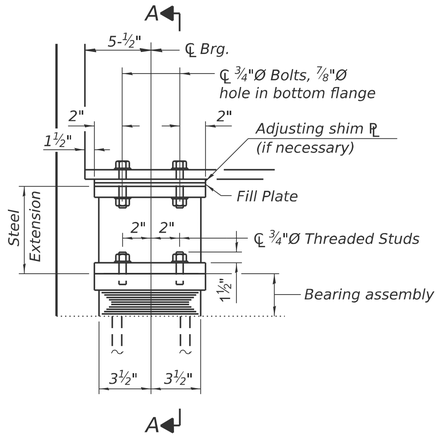

ELEVATION AT ABUT.

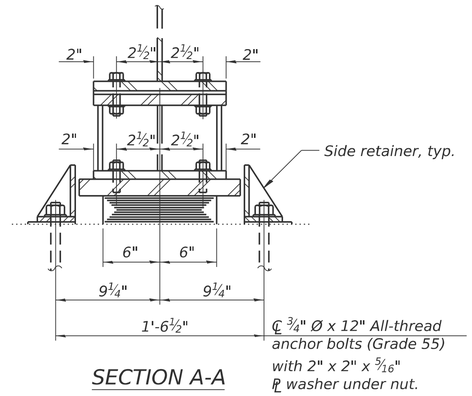

SECTION A-A

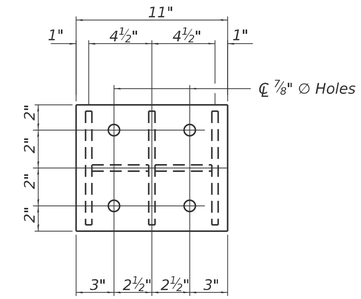

PLAN - TOP EXTENSION PLATE

TYPE I ELASTOMERIC EXP. BRG.

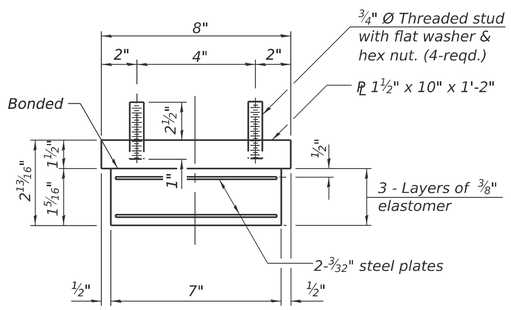

BEARING ASSEMBLY

Notes:
Side retainers and stainless steel plates shall be included in the cost of Elastomeric Bearing Assembly, Type I.
Steel Extensions, fill plates, shim plates, and connection bolts are included with Furnishing and Erecting Structural Steel.
Anchor bolts and side retainers at all supports shall be installed as each member is erected unless an equivalent temporary means of lateral restraint is used.
The steel extensions, fill plates, and structural steel plates of the Bearing Assembly shall conform to the requirements of AASHTO M270 Grade 50.
Two 1/8 in. adjusting shims shall be provided for each bearing in addition to all other plates or shims and placed shown on bearing details.
Drilled and set anchor bolts shall be installed according to Article 521.06 of the Standard Specifications.

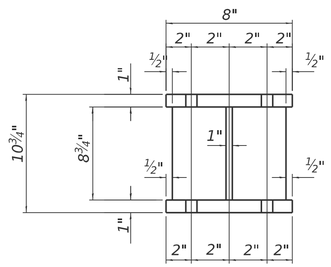

SECTION B-B

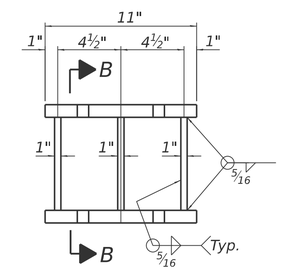

STEEL EXTENSION DETAIL

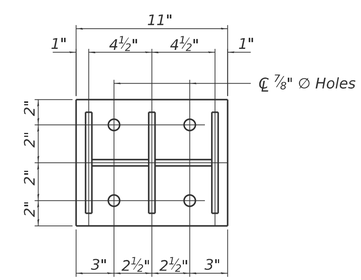

PLAN - BOTTOM EXTENSION PLATE

Note:
Shim plates shall not be placed under bearing assembly.

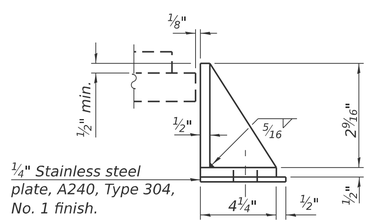

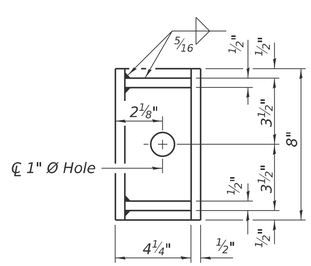

SIDE RETAINER

Equivalent rolled angle with stiffeners will be allowed in lieu of welded plates.

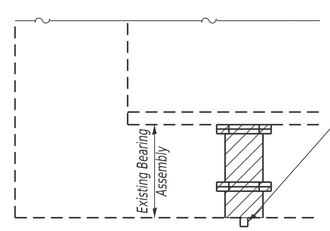

EXISTING BEARING REMOVAL DETAIL

Core and remove existing anchor bolts. Grind bearing surface level as necessary. Cost is included in "Jack and Remove Existing Bearings".

Notes for Jack and Remove Existing Bearings:

The Contractor shall submit, for approval by the Engineer, plans for the jacking and removing the existing bearings at the abutments prior to commencing any related work.
Jacking and removal of existing bearings shall be done after the existing concrete deck is removed.
The new bearings shall be in place and the jacks lowered prior to pouring the new deck.
The dead load reaction per beam (weight of steel only) at each abutment is 1k.
The minimum jack capacity is 2k per beam.

BILL OF MATERIAL

Item	Unit	Total
Elastomeric Bearing Assembly Type I	Each	7
Anchor Bolts, 3/4"	Each	14
Jack and Remove Existing Bearings	Each	7
Furnishing and Erecting Structural Steel	Pound	930

TABLE OF FILL PLATE THICKNESSES

	Beam 1	Beam 2	Beam 3	Beam 4	Beam 5	Beam 6	Beam 7
S. Abut. (038-0008)	0"	1/8"	0"	1/8"	1/4"	1/8"	0"

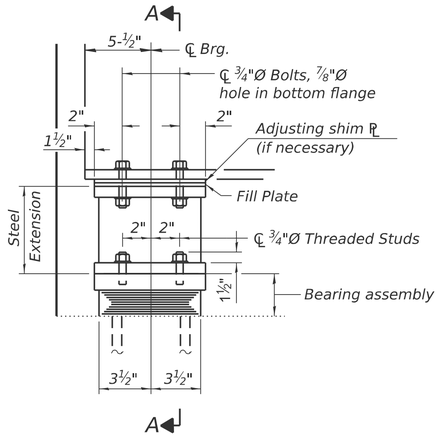

ELEVATION AT ABUT.

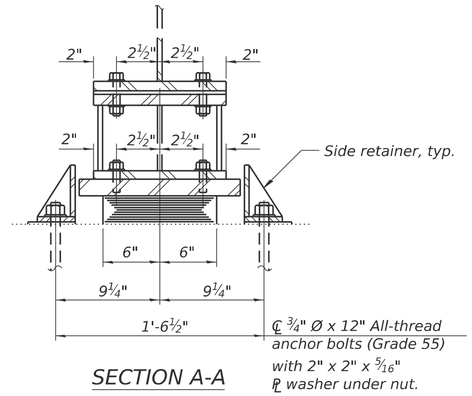

SECTION A-A

TYPE I ELASTOMERIC EXP. BRG.

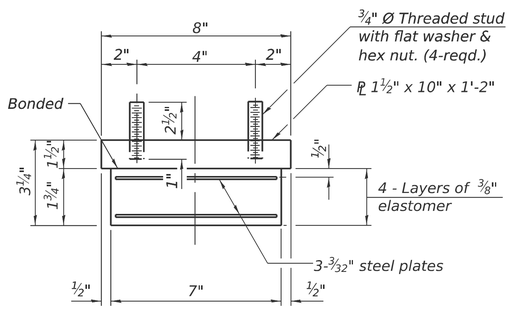

BEARING ASSEMBLY

Note:
Shim plates shall not be placed under bearing assembly.

Notes:
Side retainers and stainless steel plates shall be included in the cost of Elastomeric Bearing Assembly, Type I.
Steel Extensions, fill plates, shim plates, and connection bolts are included with Furnishing and Erecting Structural Steel.
Anchor bolts and side retainers at all supports shall be installed as each member is erected unless an equivalent temporary means of lateral restraint is used.
The steel extensions, fill plates, and structural steel plates of the Bearing Assembly shall conform to the requirements of AASHTO M270 Grade 50.
Two 1/8 in. adjusting shims shall be provided for each bearing in addition to all other plates or shims and placed shown on bearing details.
Drilled and set anchor bolts shall be installed according to Article 521.06 of the Standard Specifications.

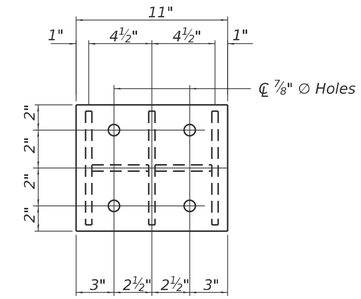

PLAN - TOP EXTENSION PLATE

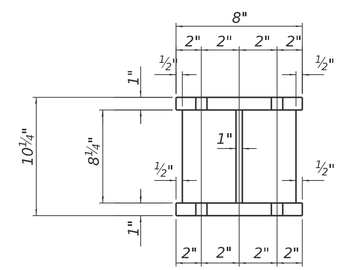

SECTION B-B

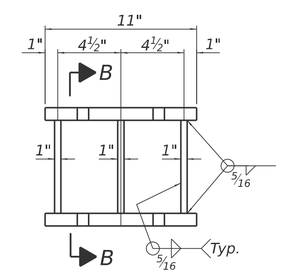

STEEL EXTENSION DETAIL

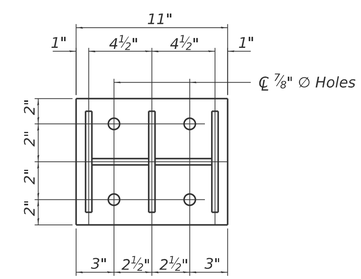

PLAN - BOTTOM EXTENSION PLATE

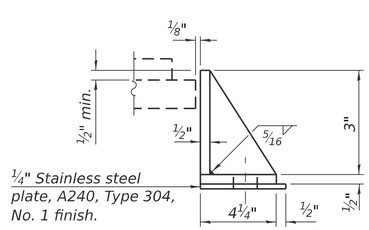

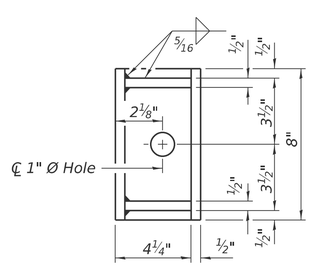

SIDE RETAINER

Equivalent rolled angle with stiffeners will be allowed in lieu of welded plates.

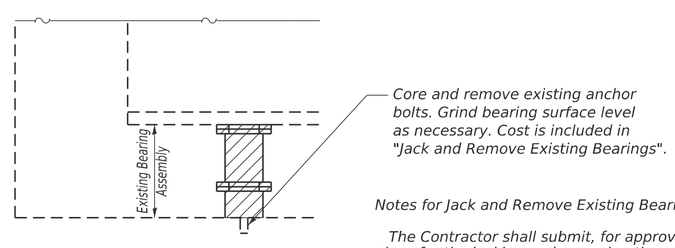

EXISTING BEARING REMOVAL DETAIL

Notes for Jack and Remove Existing Bearings:

The Contractor shall submit, for approval by the Engineer, plans for the jacking and removing the existing bearings at the abutments prior to commencing any related work.
Jacking and removal of existing bearings shall be done after the existing concrete deck is removed.
The new bearings shall be in place and the jacks lowered prior to pouring the new deck.
The dead load reaction per beam (weight of steel only) at each abutment is 1k.
The minimum jack capacity is 2k per beam.

BILL OF MATERIAL

Item	Unit	Total
Elastomeric Bearing Assembly Type I	Each	7
Anchor Bolts, 3/4"	Each	14
Jack and Remove Existing Bearings	Each	7
Furnishing and Erecting Structural Steel	Pound	1,000

MODEL: Default
FILE NAME: G:\Users\6\66501-d5-IDOT-I-57 Structure Projects-TP&W RR and 2nd St\Survey D366M80\SN038-0007_0008\Consultant_Data\Chamlin_20250\Design\0380007_0008-66M80-029-ABUT_BRG_DETS.dgn

Chamlin & Associates

USER NAME = CHAMLIN	DESIGNED - PDF	REVISED -	
	DRAWN - LAG	REVISED -	
	CHECKED - JLS	REVISED -	
PLOT DATE = 2/27/2026	DATE - 04/21/2025	REVISED -	

STATE OF ILLINOIS
DEPARTMENT OF TRANSPORTATION

SOUTH ABUTMENT BEARING DETAILS
STRUCTURE NO. 038-0008 (SB)

SCALE: | SHEET 29 OF 43 SHEETS | STA. | TO STA.

F.A.I. RTE.	SECTION	COUNTY	TOTAL SHEETS	SHEET NO.
57	(38-4,38-5)BR,D,CR	IROQUOIS	437	253

CONTRACT NO. 66M80
ILLINOIS | FED. AID PROJECT

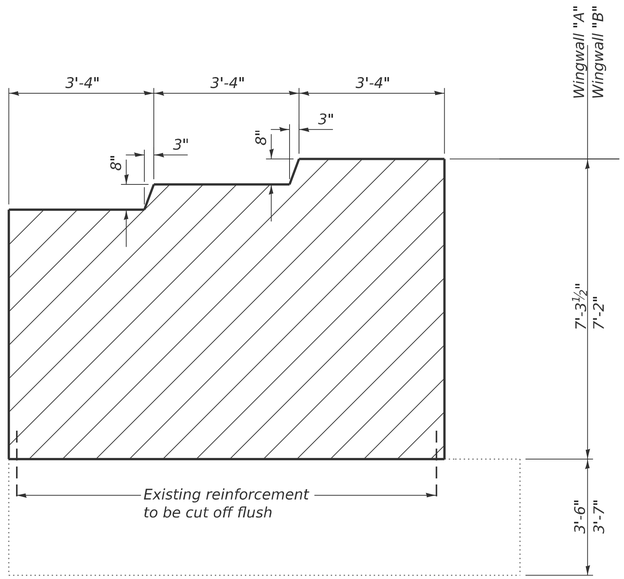

Wingwall Elevation

(S.B. North Abutment West Wingwall shown, other wingwalls similar)

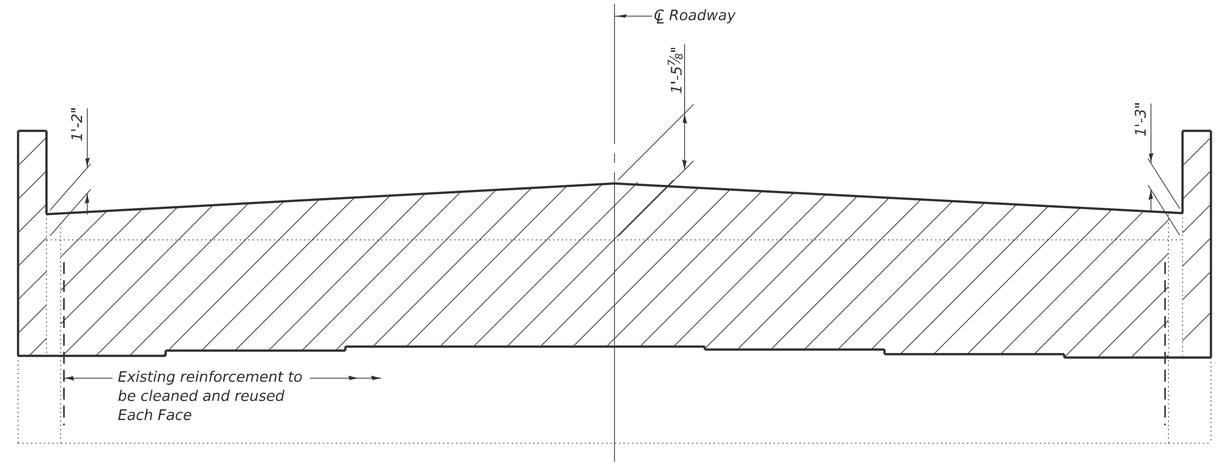

Elevation

(S.B. North Abutment shown, S.B. South Abutment
and N.B. abutments similar)

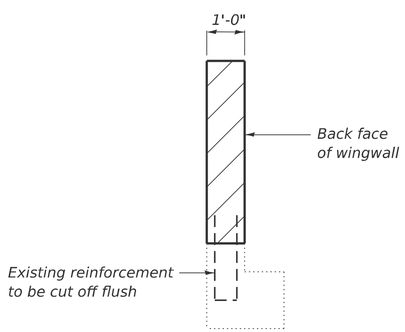

Section A-A

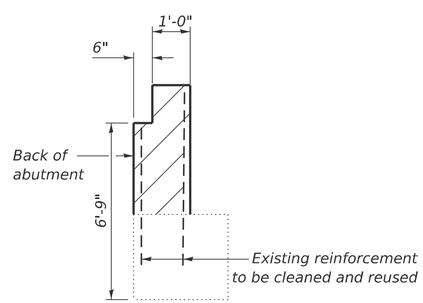

Section B-B

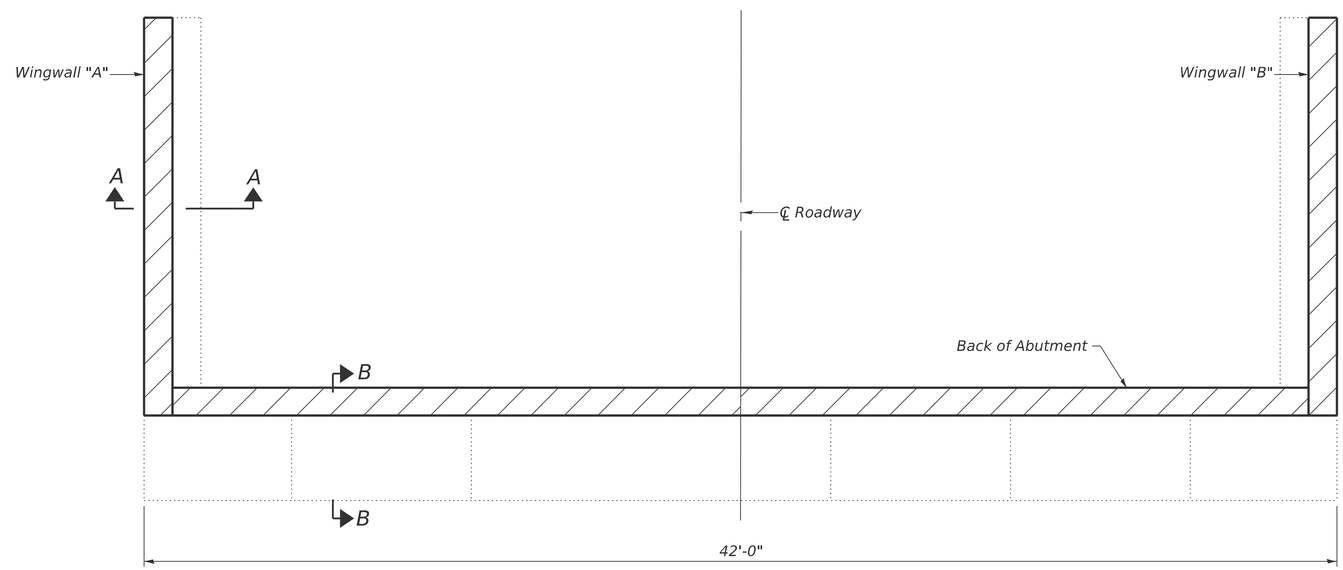

Plan

(S.B. North Abutment shown, S.B. South Abutment
and N.B. abutments similar)

Notes:
Hatched areas indicate Concrete Removal.
Existing reinforcement extending into new construction shall be cleaned, straightened, and incorporated into the new construction. Cost included with Concrete Removal.
Existing reinforcement not extending into new construction shall be cut off flush and sealed with epoxy. Cost included with Concrete Removal.
Any reinforcement bars that are damaged during concrete removal operations shall be repaired or replaced using an approved bar splicer or anchorage system. Cost included with Concrete Removal.

Structure No. 038-0007
Bill of Material - 2 Abutments

Item	Unit	Total
Concrete Removal	Cu. Yd.	28.1

Structure No. 038-0008
Bill of Material - 2 Abutments

Item	Unit	Total
Concrete Removal	Cu. Yd.	28.1

MODEL: Default
FILE NAME: G:\Users\6\66501-05-IDOT-I-57 Structure Projects-TP&W RR and 2nd St\Survey D366M80\SN\038-0007_0008\Consultant_Data\Chamlin_2025\Design\0380007_0008-66M80-030-ABUT_CONC_REM.dgn

Chamlin & Associates

USER NAME = CHAMLIN	DESIGNED - PDF	REVISED -	
	DRAWN - LAG	REVISED -	
	CHECKED - JLS	REVISED -	
PLOT DATE = 2/27/2026	DATE - 04/21/2025	REVISED -	

STATE OF ILLINOIS
DEPARTMENT OF TRANSPORTATION

ABUTMENT CONCRETE REMOVAL
STRUCTURE NO. 038-0007 (NB) & 038-0008 (SB)

SCALE: | SHEET 30 OF 43 SHEETS | STA. | TO STA.

F.A.I. RTE.	SECTION	COUNTY	TOTAL SHEETS	SHEET NO.
57	(38-4,38-5)BR,D,CR	IROQUOIS	437	254
		CONTRACT NO. 66M80		
		ILLINOIS	FED. AID PROJECT	

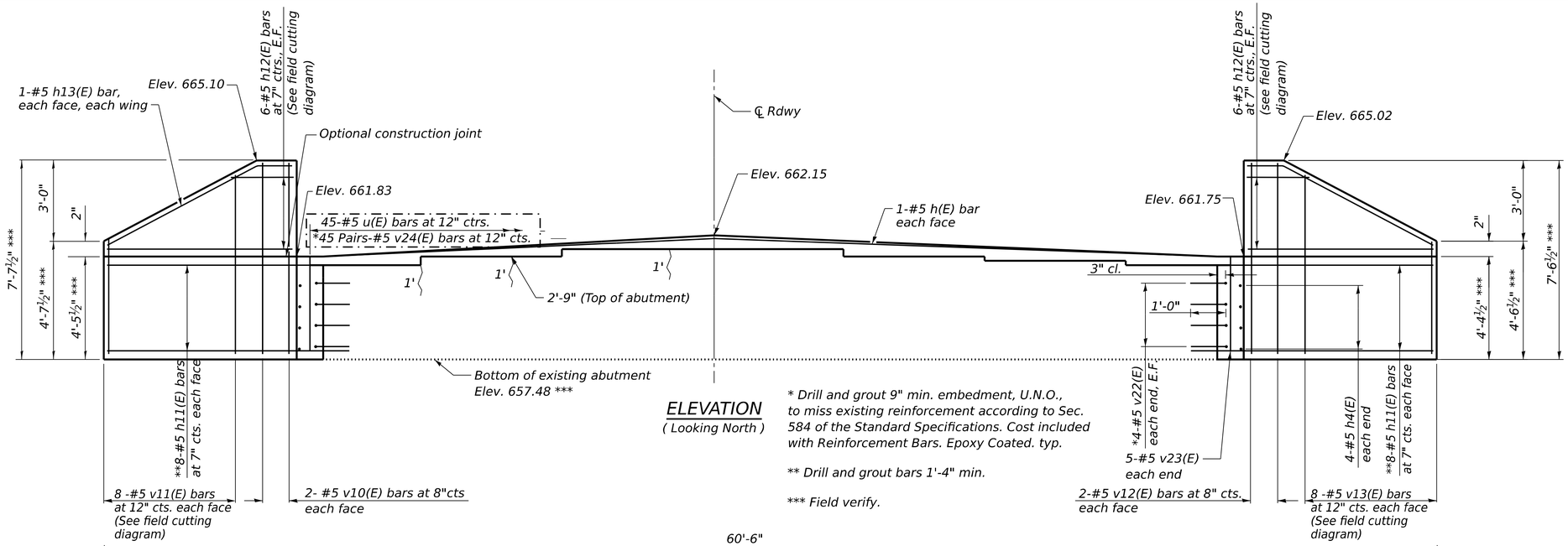

ELEVATION

(Looking North)

* Drill and grout 9" min. embedment, U.N.O., to miss existing reinforcement according to Sec. 584 of the Standard Specifications. Cost included with Reinforcement Bars. Epoxy Coated. typ.

** Drill and grout bars 1'-4" min.

*** Field verify.

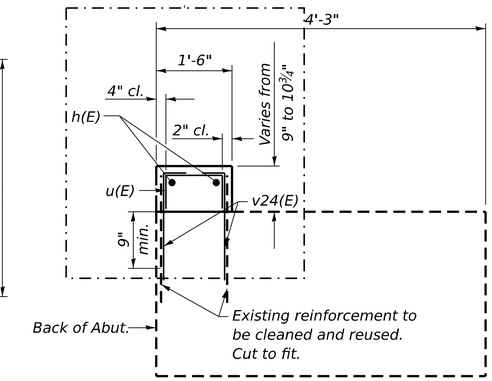

SEC. THRU ABUT.

BILL OF MATERIAL

Bar	No.	Size	Length	Shape
h(E)	2	#5	42'-6"	
h4(E)	8	#5	3'-11"	
h11(E)	32	#5	10'-5"	
h12(E)	12	#5	10'-9"	
h13(E)	4	#5	8'-10"	
u(E)	45	#5	2'-2"	
v10(E)	4	#5	7'-3"	
v11(E)	8	#5	11'-6"	
v12(E)	4	#5	7'-2"	
v13(E)	8	#5	11'-4"	
v22(E)	16	#5	2'-1"	
v23(E)	10	#5	3'-2"	
v24(E)	90	#5	2'-5"	
Structure Excavation			Cu. Yd.	65.4
Concrete Structures			Cu. Yd.	6.4
Reinforcement Bars, Epoxy Coated			Pound	1,290
Epoxy Crack Injection			Foot	6

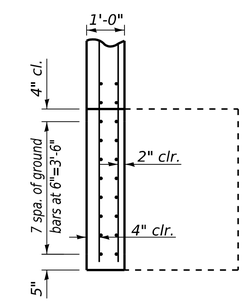

SECTION A-A

(Opposite Wing Similar)

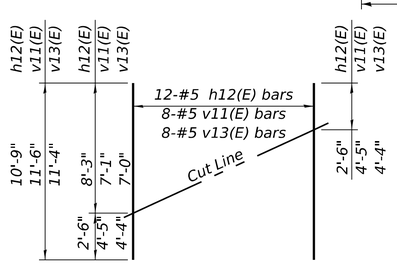

FIELD CUTTING DIAGRAM

Order h12(E), v11(E) and v13(E) full length. Cut as shown and use remainder of bars in opposite face.

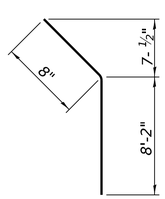

BAR h13(E)

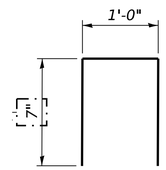

BAR u(E)

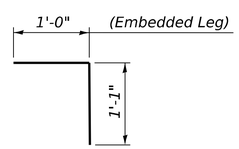

BAR v22(E)

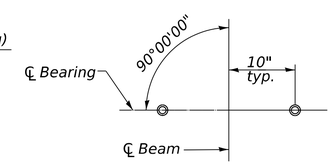

ANCHOR BOLT LAYOUT

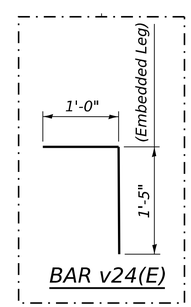

BAR v24(E)

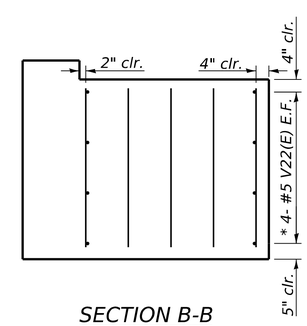

SECTION B-B

Epoxy Crack Injection

Notes:
Space reinforcement in cap to miss anchor bolts.
Pour steps monolithically with cap.
E.F. = each face

Existing Reinforcement to be cleaned, straightened and incorporated into new construction. Cost included with concrete removal

AI-SB-0 4-4-2025

MODEL: Default
FILE NAME: G:\Users\6666501-05-IDOT\I-57 Structure Projects-T&W RR and 2nd St\Survey D368M80\SN038-0007_0008\Consultant_Data\Chamlin_2025\Design\0380007_0008-66M80-031-N_ABUT_0007.dgn

Chamlin & Associates

USER NAME = CHAMLIN	DESIGNED - PDF	REVISED - 1 05/12/2026 PDF	
	DRAWN - LAG	REVISED -	
	CHECKED - JLS	REVISED -	
PLOT DATE = 5/14/2026	DATE - 04/21/2025	REVISED -	

STATE OF ILLINOIS
DEPARTMENT OF TRANSPORTATION

NORTH ABUTMENT
STRUCTURE NO. 038-0007 (NB)

SCALE: SHEET 31 OF 43 SHEETS STA. TO STA.

F.A.I. RTE.	SECTION	COUNTY	TOTAL SHEETS	SHEET NO.
57	(38-4, 38-5) BR, D, CR	IROQUOIS	437	255

CONTRACT NO. 66M80

ILLINOIS FED. AID PROJECT

REV. 5/28/26

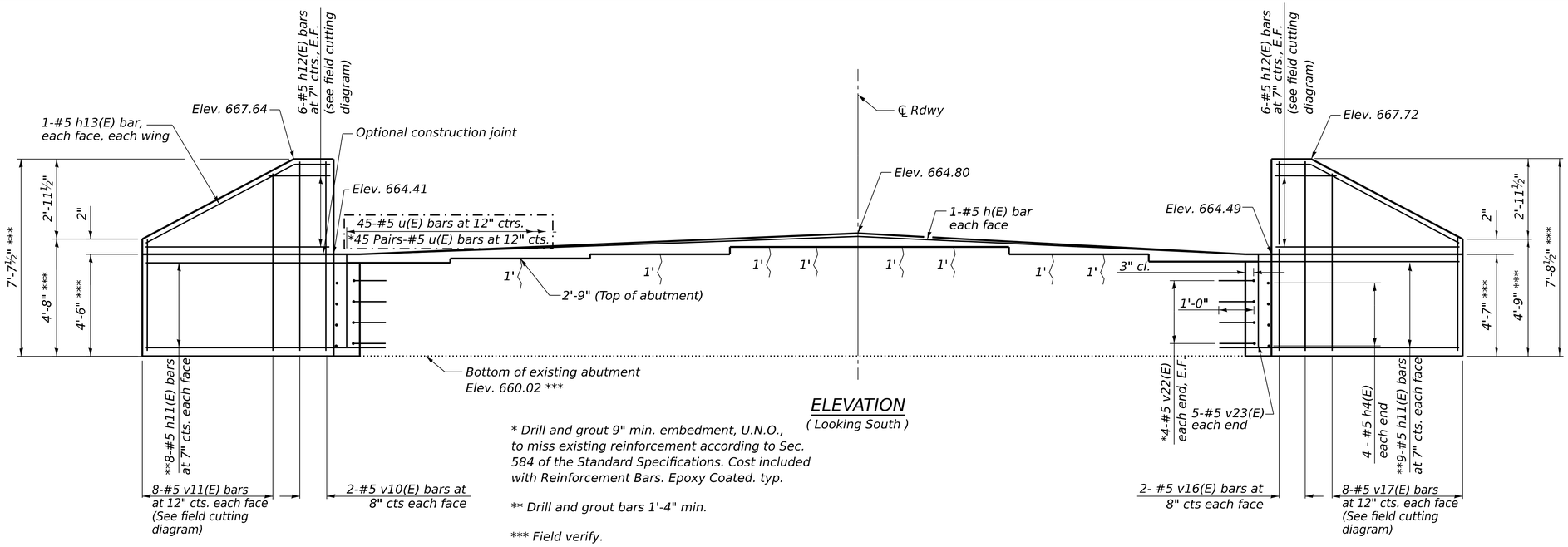

ELEVATION
(Looking South)

* Drill and grout 9" min. embedment, U.N.O., to miss existing reinforcement according to Sec. 584 of the Standard Specifications. Cost included with Reinforcement Bars. Epoxy Coated. typ.

** Drill and grout bars 1'-4" min.

*** Field verify.

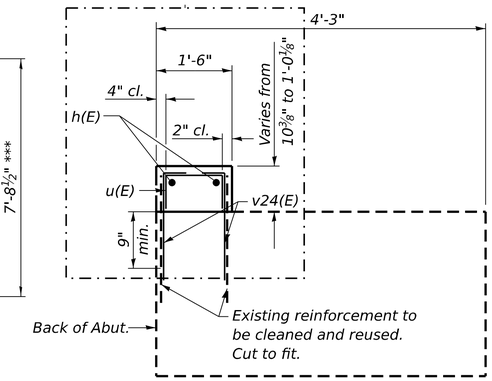

SEC. THRU ABUT.

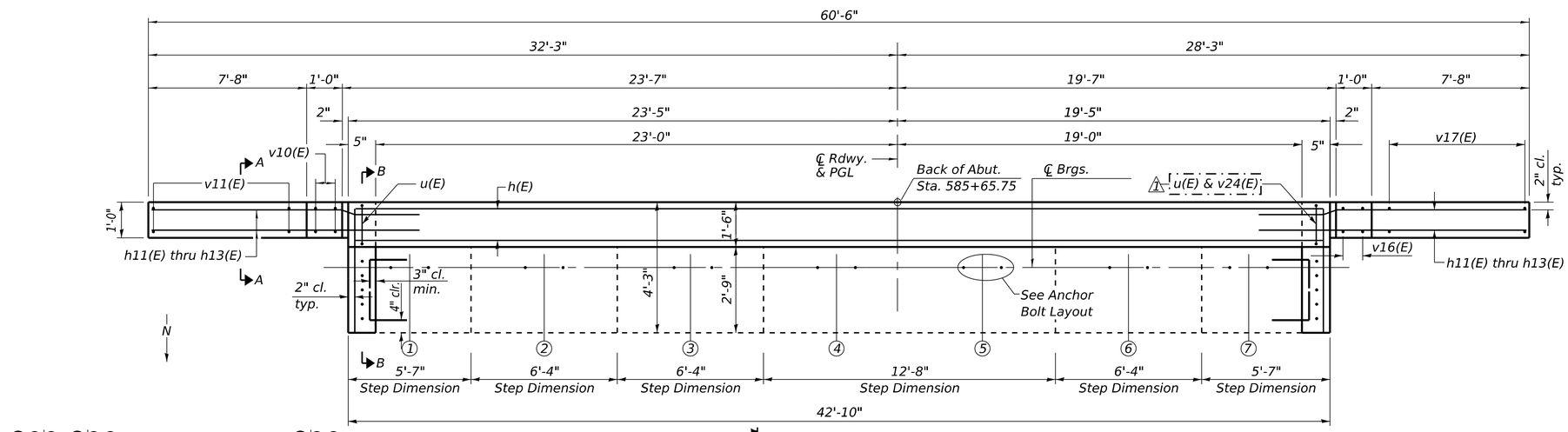

PLAN

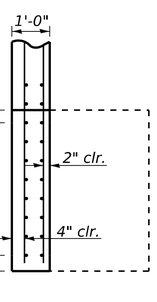

SECTION A-A
(Opposite Wing Similar)

BILL OF MATERIAL

Bar	No.	Size	Length	Shape
h(E)	2	#5	42'-6"	
h4(E)	8	#5	3'-11"	
h11(E)	34	#5	10'-5"	
h12(E)	12	#5	10'-9"	
h13(E)	4	#5	8'-10"	
u(E)	45	#5	2'-2"	
v10(E)	4	#5	7'-3"	
v11(E)	8	#5	11'-6"	
v16(E)	4	#5	7'-4"	
v17(E)	8	#5	11'-8"	
v22(E)	16	#5	2'-1"	
v23(E)	10	#5	3'-2"	
v24(E)	90	#5	2'-5"	
Structure Excavation			Cu. Yd.	65.7
Concrete Structures			Cu. Yd.	6.8
Reinforcement Bars, Epoxy Coated			Pound	1,310
Epoxy Crack Injection			Foot	11

Epoxy Crack Injection

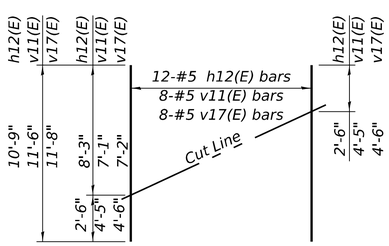

FIELD CUTTING DIAGRAM
Order h12(E), v11(E) and v17(E) full length. Cut as shown and use remainder of bars in opposite face.

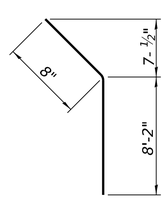

BAR h13(E)

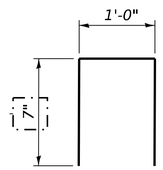

BAR u(E)

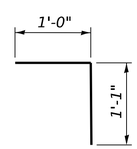

BAR v22(E)

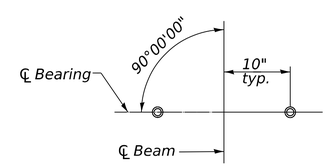

ANCHOR BOLT LAYOUT

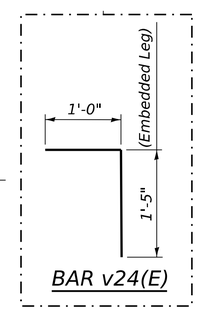

BAR v24(E)

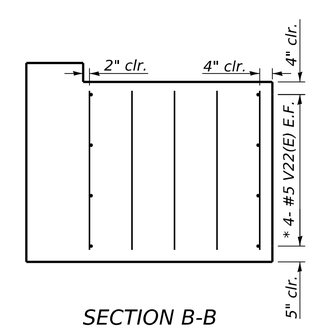

SECTION B-B

Notes:
Space reinforcement in cap to miss anchor bolts.
Pour steps monolithically with cap.
E.F. = each face

Existing Reinforcement to be cleaned, straightened and incorporated into new construction. Cost included with concrete removal

AI-SB-0 4-4-2025

USER NAME = CHAMLIN	DESIGNED - PDF	REVISED - 1 05/12/2026 PDF	STATE OF ILLINOIS DEPARTMENT OF TRANSPORTATION
	DRAWN - LAG	REVISED -	
	CHECKED - JLS	REVISED -	
PLOT DATE = 5/14/2026	DATE - 04/21/2025	REVISED -	

Chamlin & Associates

SOUTH ABUTMENT
STRUCTURE NO. 038-0007 (NB)

SCALE: SHEET 32 OF 43 SHEETS STA. TO STA.

F.A.I. RTE.	SECTION	COUNTY	TOTAL SHEETS	SHEET NO.
57	(38-4, 38-5) BR, D, CR	IROQUOIS	437	256

CONTRACT NO. 66M80
ILLINOIS FED. AID PROJECT

MODEL: Default
FILE NAME: G:\Users\6566501-d5-IDOT\I-57 Structure Projects-TP&W RR and 2nd St\Survey D366M80\SN038-0007_0008\Consultant_Data\Chamlin_2025\Design\0380007_0008-66M80-032-S_ABUT_0007.dgn

REV. 5/28/26

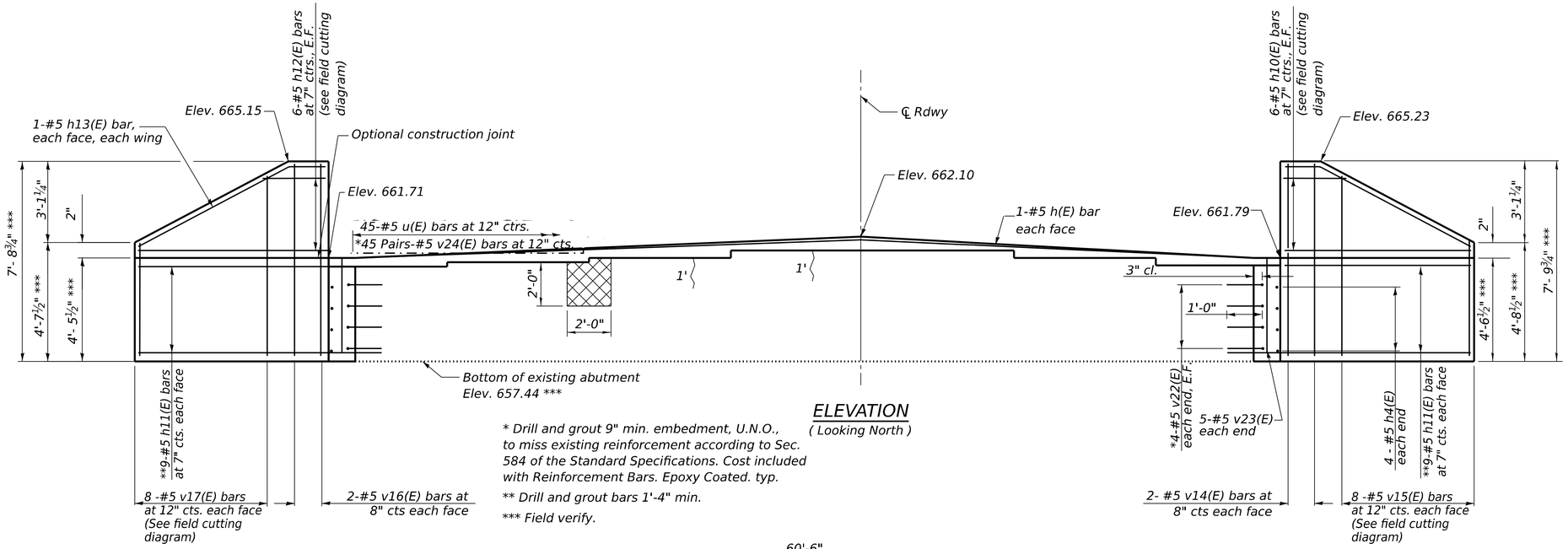

ELEVATION
(Looking North)

* Drill and grout 9" min. embedment, U.N.O., to miss existing reinforcement according to Sec. 584 of the Standard Specifications. Cost included with Reinforcement Bars. Epoxy Coated. typ.

** Drill and grout bars 1'-4" min.

*** Field verify.

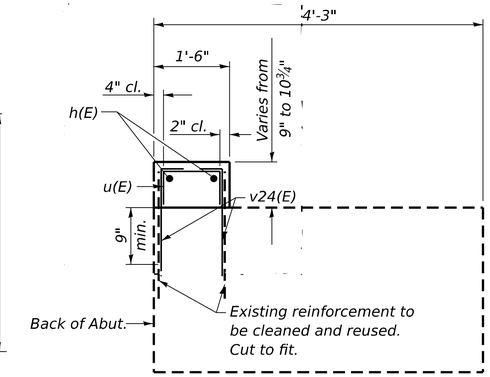

SEC. THRU ABUT.

BILL OF MATERIAL

Bar	No.	Size	Length	Shape
h(E)	2	#5	42'-6"	
h4(E)	8	#5	3'-11"	
h11(E)	36	#5	10'-5"	
h12(E)	12	#5	10'-9"	
h13(E)	4	#5	8'-10"	
u(E)	45	#5	2'-2"	
v14(E)	4	#5	7'-5"	
v15(E)	8	#5	11'-10"	
v16(E)	4	#5	7'-4"	
v17(E)	8	#5	11'-8"	
v22(E)	16	#5	2'-1"	
v23(E)	10	#5	3'-2"	
v24(E)	90	#5	2'-5"	
Structure Excavation			Cu. Yd.	66.0
Concrete Structures			Cu. Yd.	6.5
Reinforcement Bars, Epoxy Coated			Pound	1,340
Structural Repair of Concrete (depth equal to or less than 5 inches)			Sq. Ft.	4
Epoxy Crack Injection			Foot	2

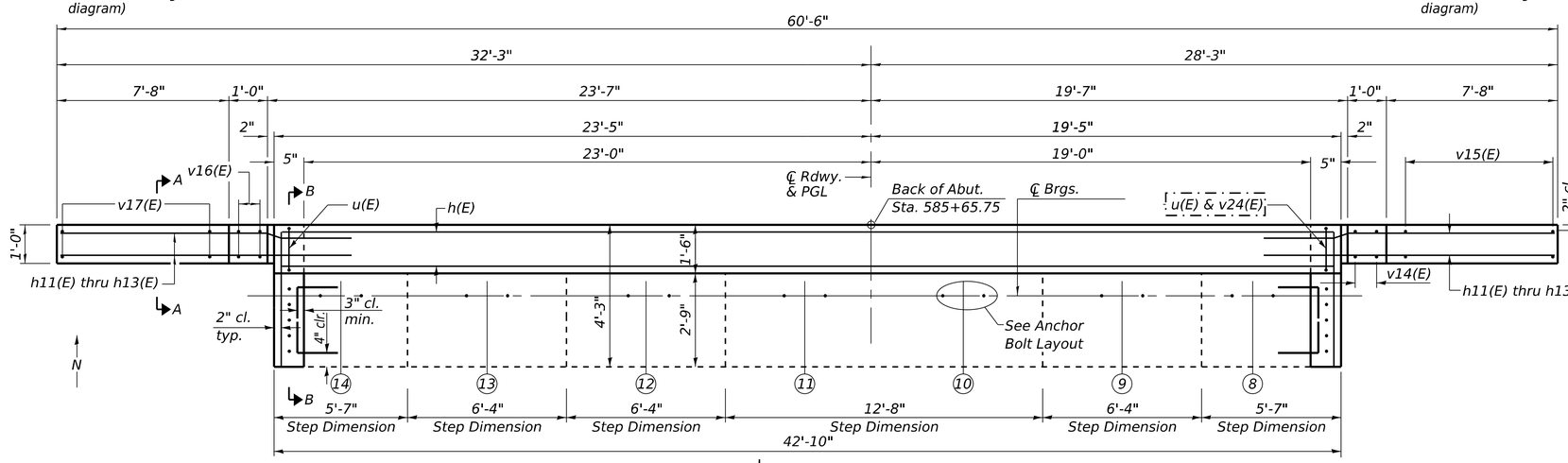

PLAN

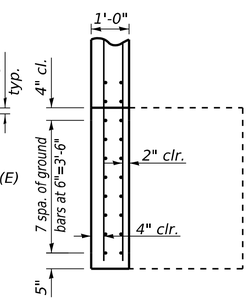

SECTION A-A
(Opposite Wing Similar)

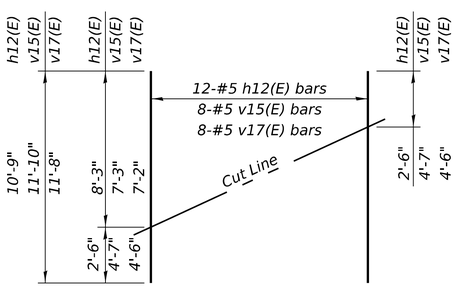

FIELD CUTTING DIAGRAM
Order h12(E), v15(E), and v17(E) full length.
Cut as shown and use remainder of bars in opposite face.

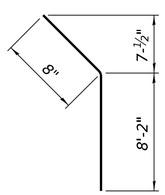

BAR h13(E)

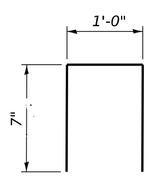

BAR u(E)

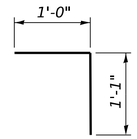

BAR v22(E)

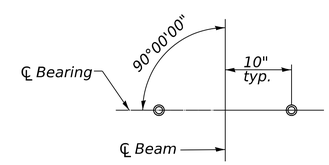

ANCHOR BOLT LAYOUT

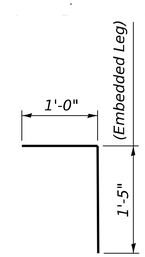

BAR v24(E)

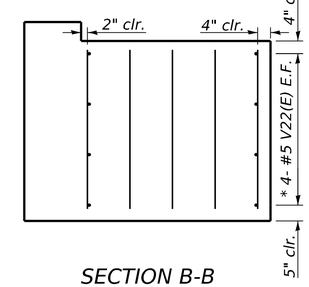

SECTION B-B

Epoxy Crack Injection

Structural Repair of Concrete (depth equal to or less than 5 inches)

Notes:
Space reinforcement in cap to miss anchor bolts.
Pour steps monolithically with cap.
E.F. = each face

Existing Reinforcement to be cleaned, straightened and incorporated into new construction. Cost included with concrete removal

AI-SB-0 4-4-2025

MODEL: Default
FILE NAME: G:\Users\6\66501-05-IDOT-I-57 Structure Projects-TP&W RR and 2nd St\Survey D366M80\SN038-0007_0008\Consultant_Data\Chamlin_2025\Design\0380007_0008-66M80-033-N_ABUT_0008.dgn

Chamlin & Associates

USER NAME = CHAMLIN	DESIGNED - PDF	REVISED - 05/12/2026 PDF	
	DRAWN - LAG	REVISED -	
	CHECKED - JLS	REVISED -	
PLOT DATE = 5/13/2026	DATE - 04/21/2025	REVISED -	

STATE OF ILLINOIS
DEPARTMENT OF TRANSPORTATION

NORTH ABUTMENT
STRUCTURE NO. 038-0008 (SB)

SCALE: SHEET 33 OF 43 SHEETS STA. TO STA.

F.A.I. RTE.	SECTION	COUNTY	TOTAL SHEETS	SHEET NO.
57	(38-4, 38-5) BR, D, CR	IROQUOIS	437	257
		CONTRACT NO. 66M80		
		ILLINOIS FED. AID PROJECT		

REV. 5/28/26

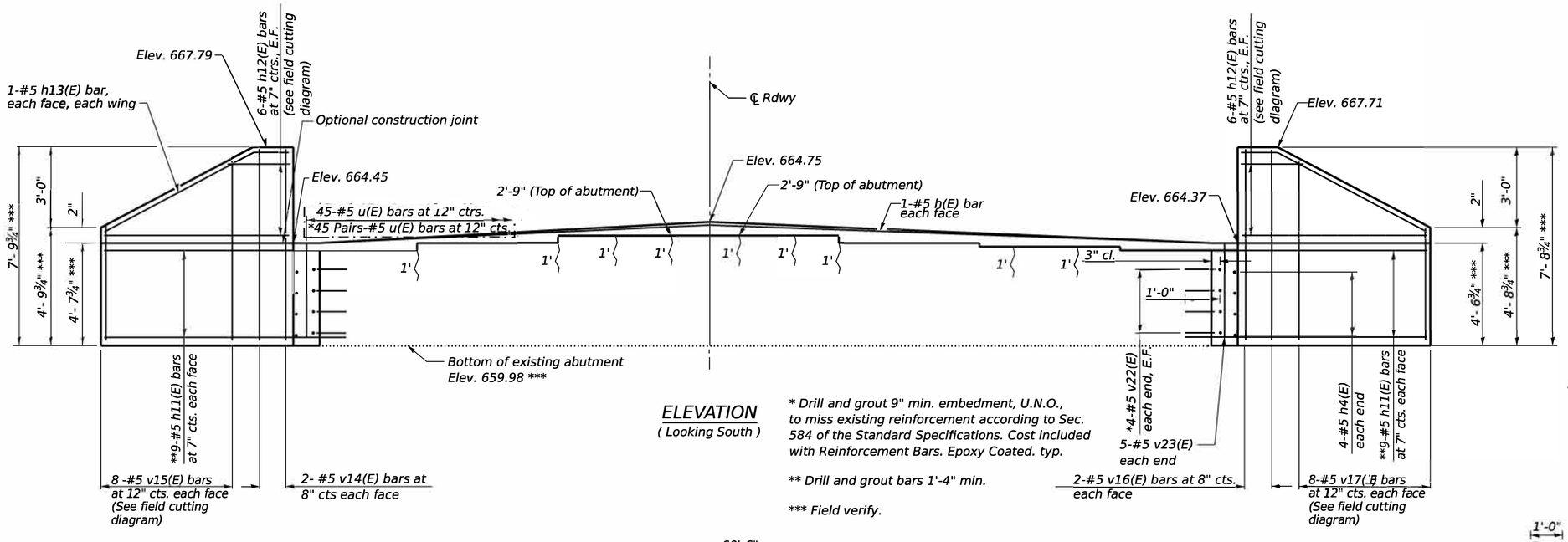

ELEVATION
(Looking South)

* Drill and grout 9" min. embedment, U.N.O., to miss existing reinforcement according to Sec. 584 of the Standard Specifications. Cost included with Reinforcement Bars. Epoxy Coated. typ.

** Drill and grout bars 1'-4" min.

*** Field verify.

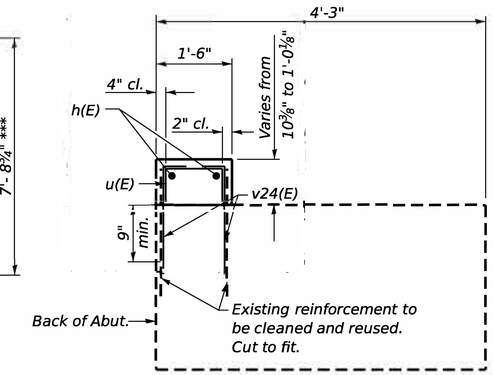

SEC. THRU ABUT.

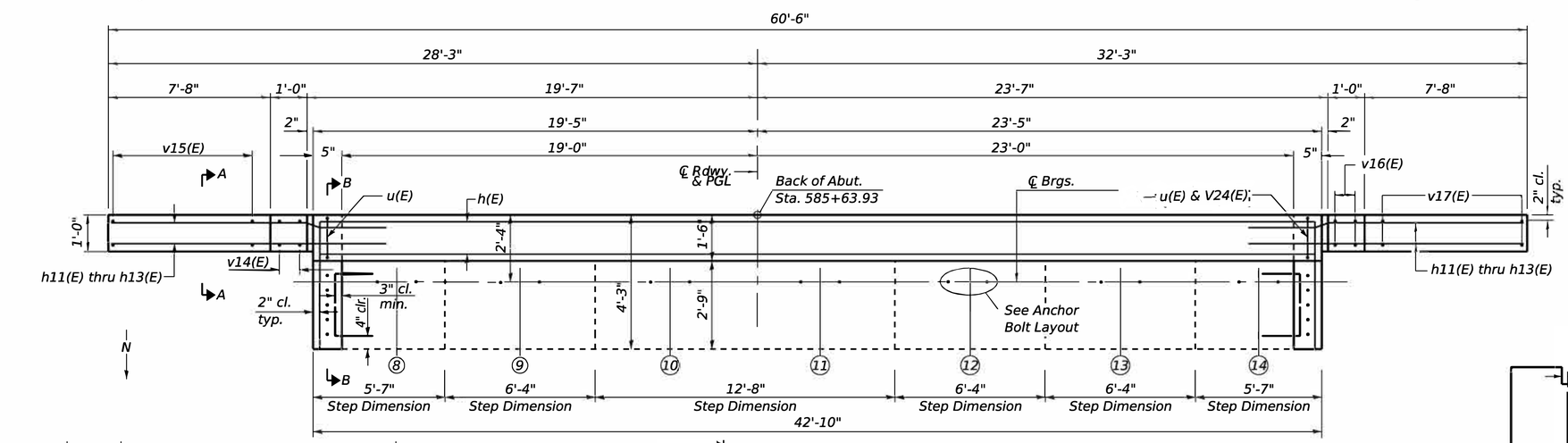

PLAN

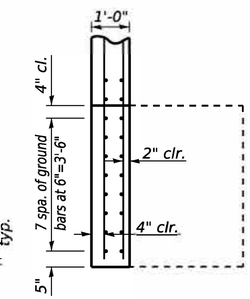

SECTION A-A
(Opposite Wing Similar)

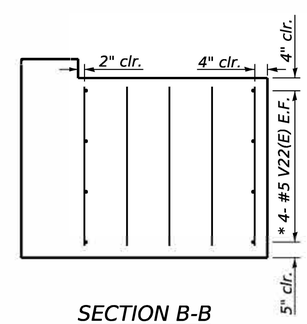

SECTION B-B

BILL OF MATERIAL

Bar	No.	Size	Length	Shape
h(E)	2	#5	42'-6"	
h4(E)	8	#5	3'-11"	
h11(E)	36	#5	10'-5"	
h12(E)	12	#5	10'-9"	
h13(E)	4	#5	8'-10"	
u(E)	45	#5	2'-2"	
v14(E)	4	#5	7'-5"	
v15(E)	8	#5	11'-10"	
v16(E)	4	#5	7'-4"	
v17(E)	8	#5	11'-8"	
v22(E)	16	#5	2'-1"	
v23(E)	10	#5	3'-2"	
v24(E)	90	#5	2'-5"	
Structure Excavation			Cu. Yd.	66.0
Concrete Structures			Cu. Yd.	6.8
Reinforcement Bars, Epoxy Coated			Pound	1,340
Epoxy Crack Injection			Foot	15

Epoxy Crack Injection

Notes:
Space reinforcement in cap to miss anchor bolts.
Pour steps monolithically with cap.
E.F. = each face

Existing Reinforcement to be cleaned, straightened and incorporated into new construction. Cost included with concrete removal

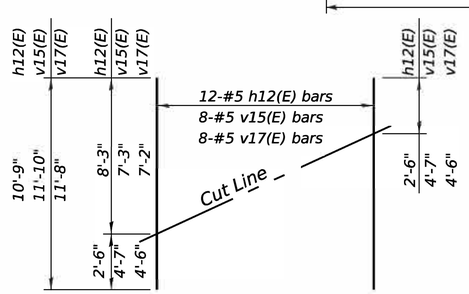

FIELD CUTTING DIAGRAM
Order h12(E), v15(E), and v17(E) full length.
Cut as shown and use remainder of bars in opposite face.

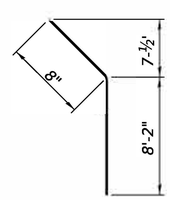

BAR h13(E)

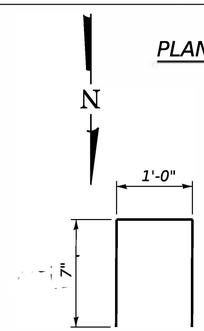

BAR u(E)

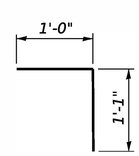

BAR v22(E)

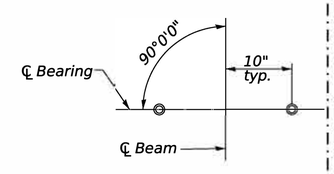

ANCHOR BOLT LAYOUT

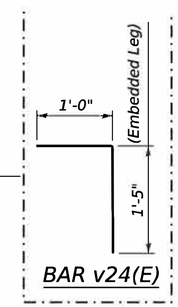

BAR v24(E)

MODEL: Default
FILE NAME: G:\Users\6\66501-05-IDOT-I-57 Structure Projects-T&W RR and 2nd St\Survey D366M80\SN039-0007_0008\Consultant_Data\Chamlin_2025\Design\0380007_0008-66M80-034-S_ABUT_0008.dgn

Chamlin & Associates

USER NAME = CHAMLIN	DESIGNED - PDF	REVISED - 05/12/2026 PDF	
	DRAWN - LAG	REVISED -	
	CHECKED - JLS	REVISED -	
PLOT DATE = 5/13/2026	DATE - 04/21/2025	REVISED -	

STATE OF ILLINOIS
DEPARTMENT OF TRANSPORTATION

SOUTH ABUTMENT
STRUCTURE NO. 038-0008 (SB)

SCALE: | SHEET 34 OF 43 SHEETS | STA. | TO STA.

F.A.I. RTE.	SECTION	COUNTY	TOTAL SHEETS	SHEET NO.
57	(38-4, 38-5) BR, D, CR	IROQUOIS	437	258
		CONTRACT NO. 66M80		
		ILLINOIS	FED. AID PROJECT	

REV. 5/28/26

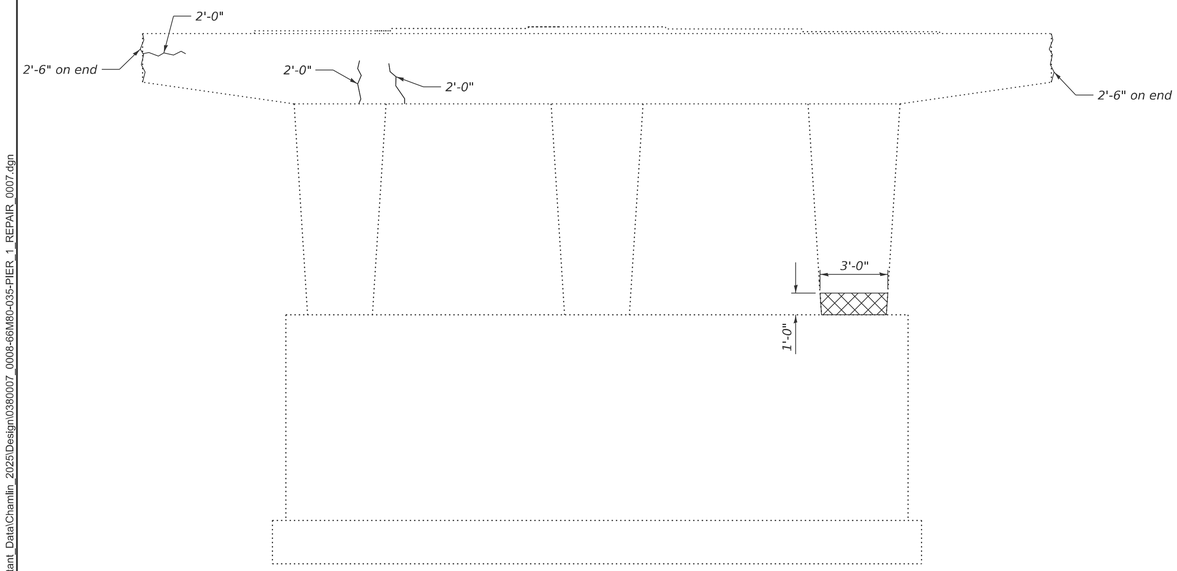

PIER 1
NORTH FACE

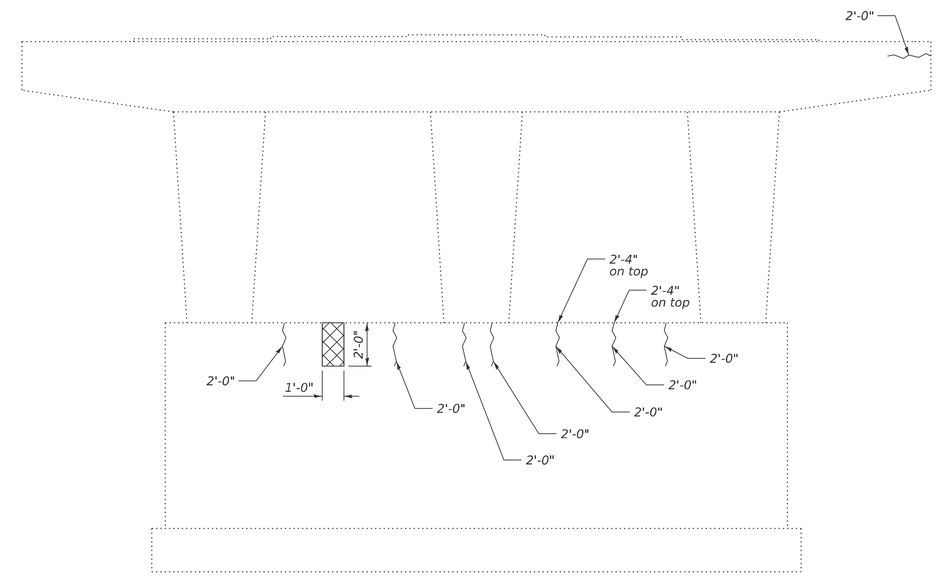

PIER 1
SOUTH FACE

Epoxy Crack Injection

Structural Repair of Concrete
(depth equal to or less than 5 inches)

BILL OF MATERIAL

Structural Repair of Concrete (depth equal to or less than 5 inches)	Sq. Ft.	5
Epoxy Crack Injection	Foot	32

MODEL: Default
FILE NAME: G:\Users\6\66501-05-IDOT-I-57 Structure Projects-TP&W RR and 2nd St\Survey D36M80\SN038-0007_0008\Consultant_Data\Chamlin_2025\Design\0380007_0008-66M80-035-PIER_1_REPAIR_0007.dgn

Chamlin & Associates

USER NAME = CHAMLIN	DESIGNED - PDF	REVISED -	
	DRAWN - LAG	REVISED -	
	CHECKED - JLS	REVISED -	
PLOT DATE = 2/27/2026	DATE - 04/21/2025	REVISED -	

STATE OF ILLINOIS
DEPARTMENT OF TRANSPORTATION

PIER 1 REPAIR
STRUCTURE NO. 038-0007 (NB)

SCALE: | SHEET 35 OF 43 SHEETS | STA. | TO STA.

F.A.I. RTE.	SECTION	COUNTY	TOTAL SHEETS	SHEET NO.
57	(38-4,38-5)BR,D,CR	IROQUOIS	437	259
		CONTRACT NO. 66M80		
		ILLINOIS	FED. AID PROJECT	

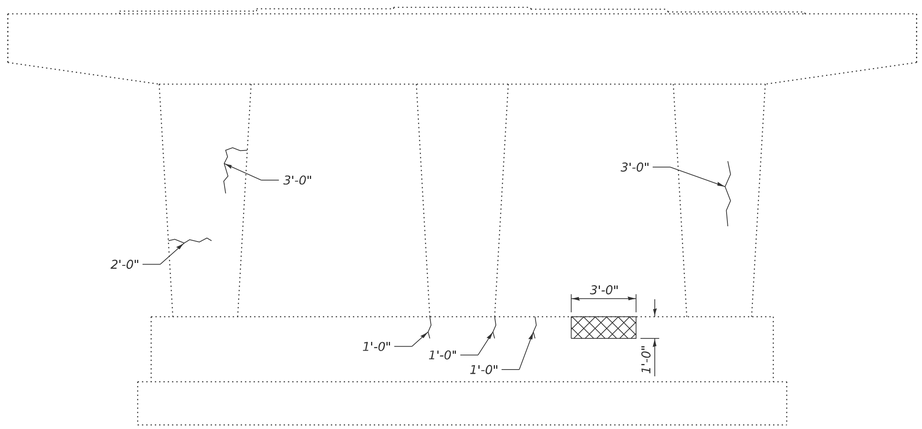

PIER 2
NORTH FACE

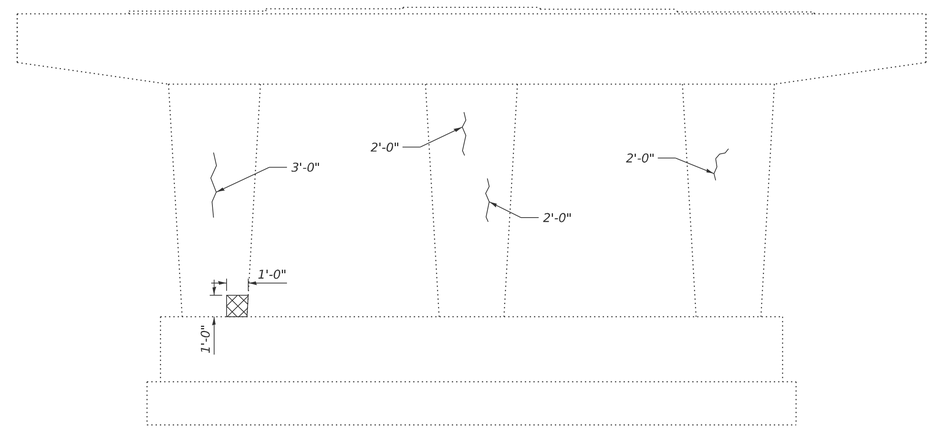

PIER 2
SOUTH FACE

Epoxy Crack Injection

Structural Repair of Concrete
(depth equal to or less than 5 inches)

BILL OF MATERIAL

Structural Repair of Concrete (depth equal to or less than 5 inches)	Sq. Ft.	4
Epoxy Crack Injection	Foot	20

MODEL: Default
FILE NAME: G:\Users\6\66501-05-IDOT-I-57 Structure Projects-TP&W RR and 2nd St\Survey D366M80\SN038-0007_0008\Consultant_Data\Chamlin_2025\Design\0380007_0008-66M80-036-PIER_2_REPAIR_0007.dgn

Chamlin & Associates

USER NAME = CHAMLIN	DESIGNED - PDF	REVISED -	
	DRAWN - LAG	REVISED -	
	CHECKED - JLS	REVISED -	
PLOT DATE = 2/27/2026	DATE - 04/21/2025	REVISED -	

STATE OF ILLINOIS
DEPARTMENT OF TRANSPORTATION

PIER 2 REPAIR
STRUCTURE NO. 038-0007 (NB)

SCALE: | SHEET 36 OF 43 SHEETS | STA. | TO STA.

F.A.I. RTE.	SECTION	COUNTY	TOTAL SHEETS	SHEET NO.
57	(38-4,38-5)BR,D,CR	IROQUOIS	437	260
		CONTRACT NO. 66M80		
		ILLINOIS	FED. AID PROJECT	

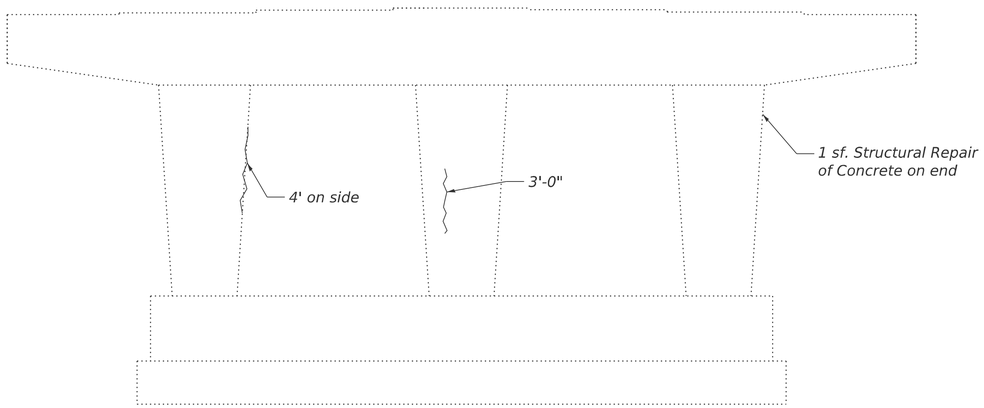

PIER 1
NORTH FACE

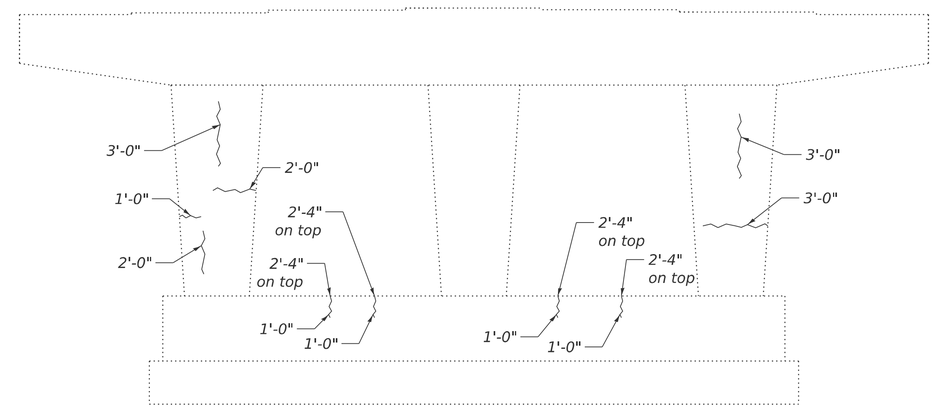

PIER 1
SOUTH FACE

Epoxy Crack Injection

BILL OF MATERIAL

Structural Repair of Concrete (depth equal to or less than 5 inches)	Sq. Ft.	1
Epoxy Crack Injection	Foot	35

MODEL: Default
FILE NAME: G:\Users\6\66501-05-IDOT-I-57 Structure Projects-TP&W RR and 2nd St\Survey D366M80\SN038-0007_0008\Consultant_Data\Chamlin_2025\Design\0380007_0008-66M80-037-PIER_1_REPAIR_0008.dgn

Chamlin & Associates

USER NAME = CHAMLIN	DESIGNED - PDF	REVISED -	
	DRAWN - LAG	REVISED -	
	CHECKED - JLS	REVISED -	
PLOT DATE = 2/27/2026	DATE - 04/21/2025	REVISED -	

STATE OF ILLINOIS
DEPARTMENT OF TRANSPORTATION

PIER 1 REPAIR
STRUCTURE NO. 038-0008 (SB)

SCALE: | SHEET 37 OF 43 SHEETS | STA. | TO STA.

F.A.I. RTE.	SECTION	COUNTY	TOTAL SHEETS	SHEET NO.
57	(38-4,38-5)BR,D,CR	IROQUOIS	437	261
		CONTRACT NO. 66M80		
		ILLINOIS	FED. AID PROJECT	

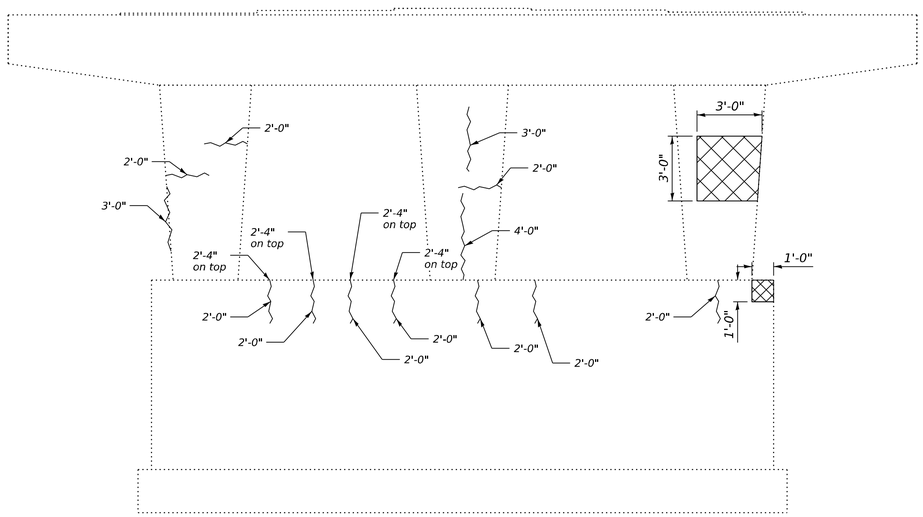

PIER 2
NORTH FACE

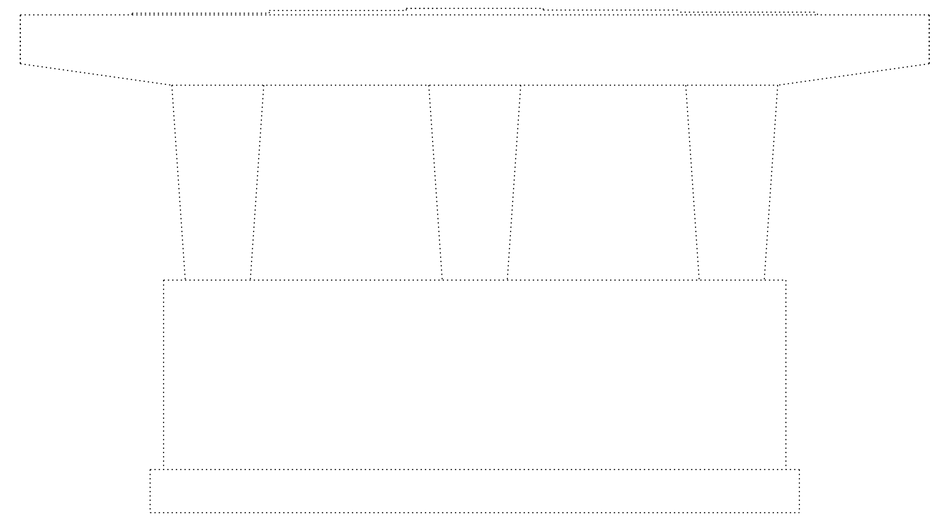

PIER 2
SOUTH FACE

Epoxy Crack Injection

Structural Repair of Concrete
(depth equal to or less than 5 inches)

BILL OF MATERIAL

Structural Repair of Concrete (depth equal to or less than 5 inches)	Sq. Ft.	10
Epoxy Crack Injection	Foot	40

MODEL: Default
FILE NAME: G:\Users\6\66501-05-IDOT-I-57 Structure Projects-TP&W RR and 2nd St\Survey D366M80\SN038-0007_0008\Consultant_Data\Chamlin_2025\Design\0380007_0008-66M80-038-PIER_2_REPAIR_0008.dgn

Chamlin & Associates

USER NAME = CHAMLIN	DESIGNED - PDF	REVISED -	
	DRAWN - LAG	REVISED -	
	CHECKED - JLS	REVISED -	
PLOT DATE = 2/27/2026	DATE - 04/21/2025	REVISED -	

STATE OF ILLINOIS
DEPARTMENT OF TRANSPORTATION

PIER 2 REPAIR
STRUCTURE NO. 038-0008 (SB)

SCALE: | SHEET 38 OF 43 SHEETS | STA. | TO STA.

F.A.I. RTE.	SECTION	COUNTY	TOTAL SHEETS	SHEET NO.
57	(38-4,38-5)BR,D,CR	IROQUOIS	437	262
		CONTRACT NO. 66M80		
		ILLINOIS FED. AID PROJECT		

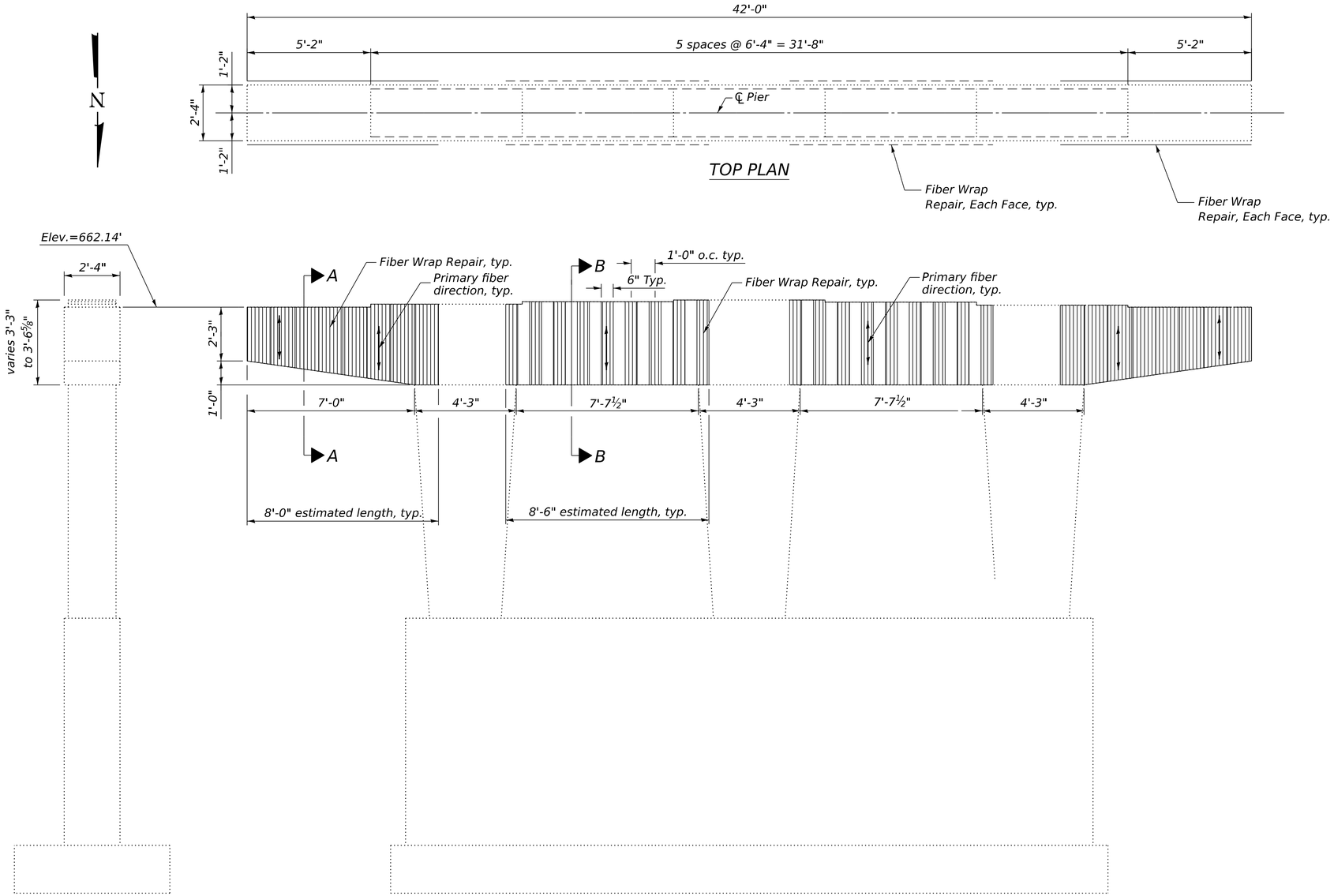

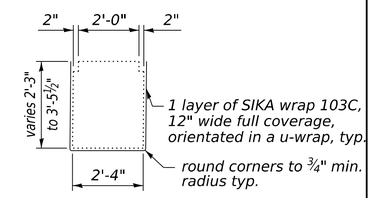

SECTION A-A

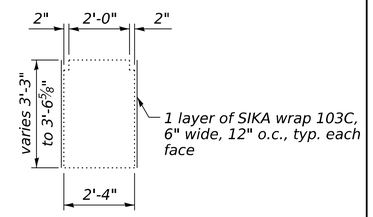

SECTION B-B

BILL OF MATERIAL

Fiber Wrap	Sq. Ft.	197

Fiber Wrap Notes:
Prior to installation surface must be clean, sound, and dry. Remove dust, laitance, grease, curing compounds, impregnations, waxes, foreign articles, disintegrated materials, and other bond inhibiting materials from the surface.

Existing uneven surfaces must be filled with an appropriate repair mortar prior to Fiber Wrap repair installation.

Cracks with width greater than 0.012 inches must be stabilized using epoxy injection methods when directed and approved by the Engineer.

Prior to placing the Fiber Wrap repair material, the concrete surface is to be sandblasted and cleaned.

System is a vapor barrier. Don't encapsulate concrete if any surface moisture is present.

Carbon fabric is non-reactive. However, caution must be used when handling since a fine "Carbon Dust" may be present on the surface. Gloves and protective face masks must, therefore, be worn to protect against any respiratory problems and skin irritation.

General installation procedures are given in the special provisions "Fiber Wrap".

It is the Contractor's responsibility to remove any protrusions in the concrete in the Fiber Wrap repair area.

Concrete edges shall be rounded to at least ¾"radius and smoothed to a surface finish prior to application of Fiber Wrap.

If hollow or deteriorated concrete is detected, repair per special provision "Structural Repair of Concrete" prior to Fiber Wrap repair. Repair shall be performed per Structural Repair of Concrete.

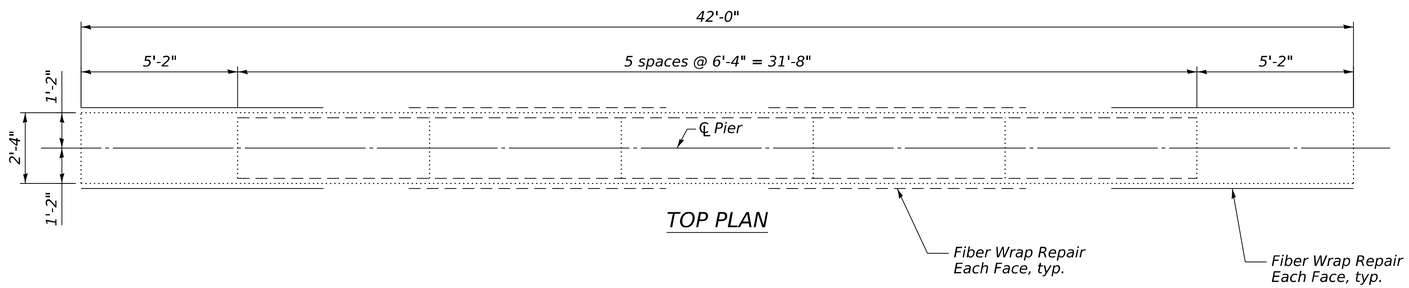

TOP PLAN

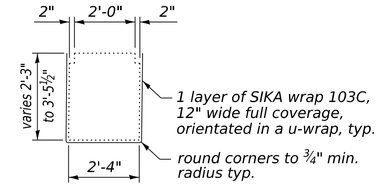

SECTION A-A

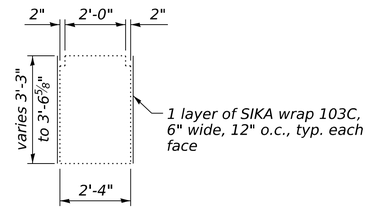

SECTION B-B

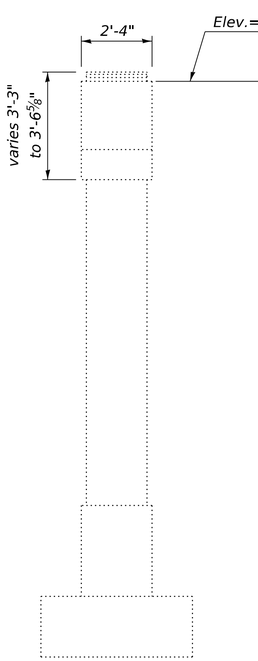

END VIEW

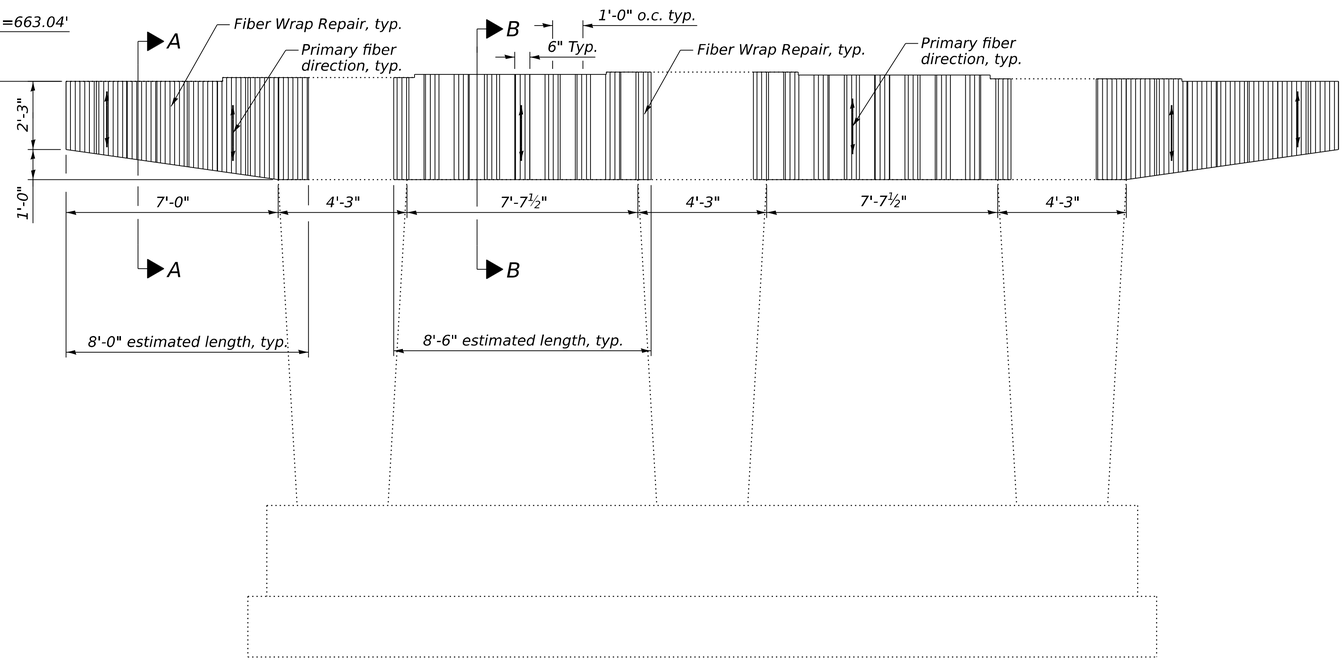

ELEVATION

(North Face)

BILL OF MATERIAL

Fiber Wrap	Sq. Ft.	197

For "Fiber Wrap" Notes,
See sheet 39 of 43.

MODEL: Default
FILE NAME: G:\Users\6\66501-05-IDOT-I-57 Structure Projects-TP&W RR and 2nd St\Survey D366M80\SN038-0007_0008\Consultant_Data\Chamlin_2025\Design\0380007_0008-66M80-040-PIER_2_DETS_0007.dgn

Chamlin & Associates

USER NAME = CHAMLIN	DESIGNED - PDF	REVISED -	
	DRAWN - LAG	REVISED -	
	CHECKED - JLS	REVISED -	
PLOT DATE = 2/27/2026	DATE - 04/21/2025	REVISED -	

STATE OF ILLINOIS
DEPARTMENT OF TRANSPORTATION

PIER 2 DETAILS
STRUCTURE NO. 038-0007 (NB)

SCALE: SHEET 40 OF 43 SHEETS STA. TO STA.

F.A.I. RTE.	SECTION	COUNTY	TOTAL SHEETS	SHEET NO.
57	(38-4,38-5)BR,D,CR	IROQUOIS	437	264
		CONTRACT NO. 66M80		
		ILLINOIS FED. AID PROJECT		

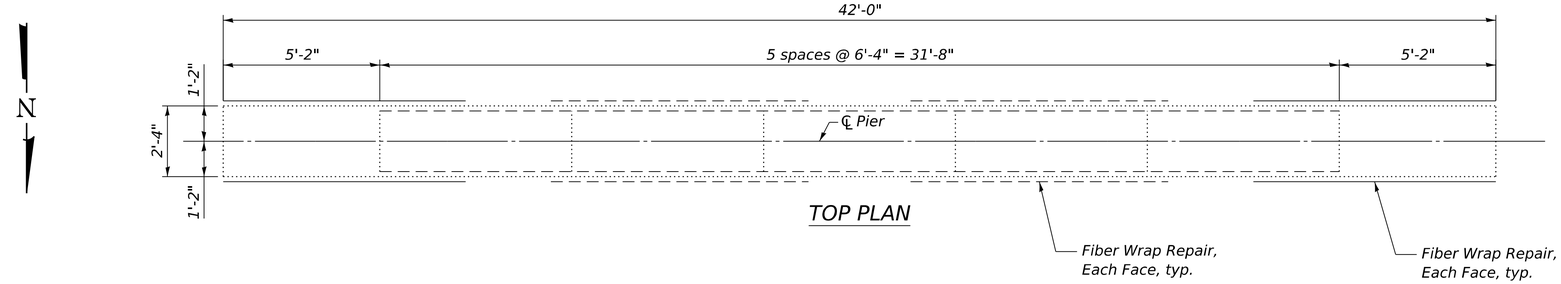

TOP PLAN

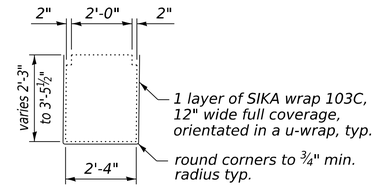

SECTION A-A

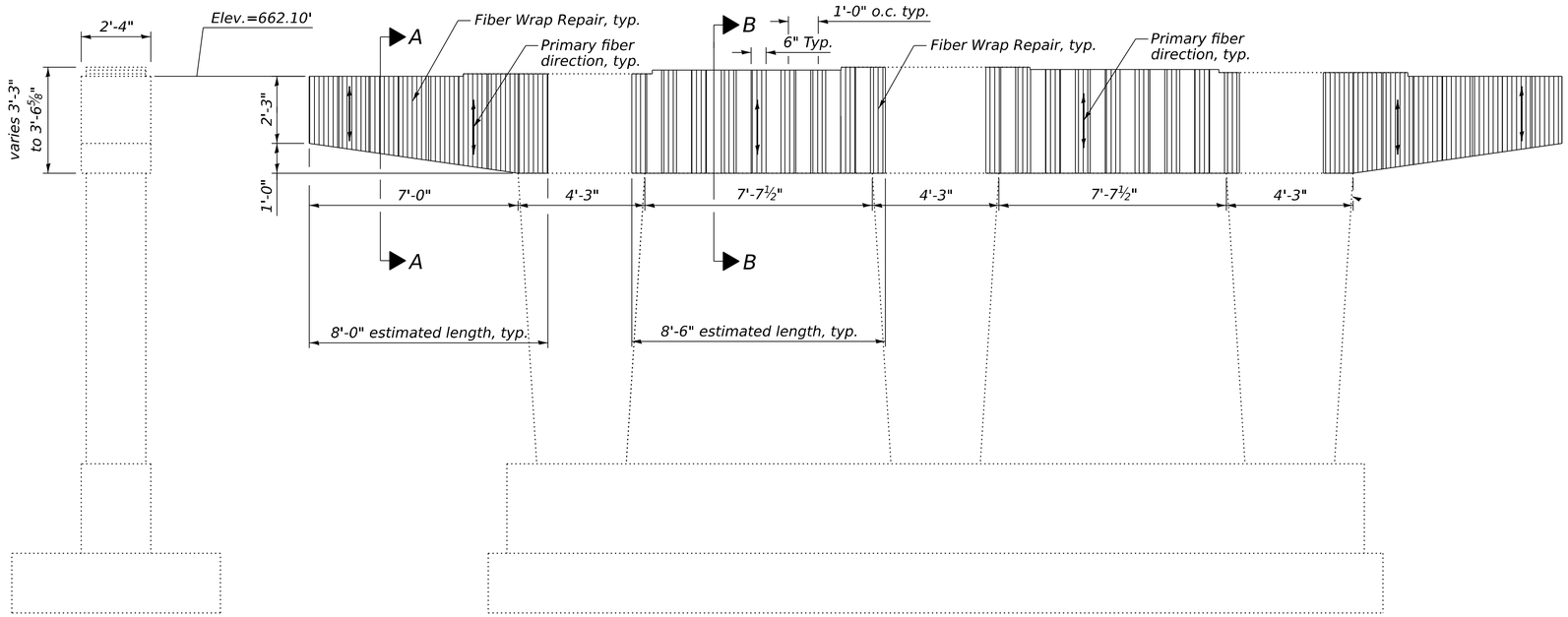

END VIEW

ELEVATION

(North Face)

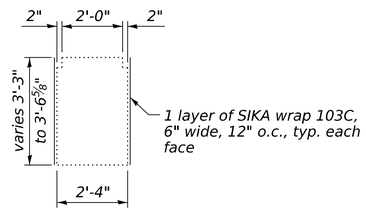

SECTION B-B

BILL OF MATERIAL

Fiber Wrap	Sq. Ft.	197

For "Fiber Wrap" Notes,
See sheet 39 of 43.

MODEL: Default
FILE NAME: G:\Users\6\668501-05-IDOT-I-57 Structure Projects-TP&W RR and 2nd St\Survey D366M80\SN038-0007_0008\Consultant_Data\Chamlin_2025\Design\0380007_0008-66M80-041-PIER_1_DETS_0008.dgn

Chamlin & Associates

USER NAME = CHAMLIN	DESIGNED - PDF	REVISED -	
	DRAWN - LAG	REVISED -	
	CHECKED - JLS	REVISED -	
PLOT DATE = 2/27/2026	DATE - 04/21/2025	REVISED -	

STATE OF ILLINOIS
DEPARTMENT OF TRANSPORTATION

PIER 1 DETAILS
STRUCTURE NO. 038-0008 (SB)

SCALE: | SHEET 41 OF 43 SHEETS | STA. | TO STA.

F.A.I. RTE.	SECTION	COUNTY	TOTAL SHEETS	SHEET NO.
57	(38-4,38-5)BR,D,CR	IROQUOIS	437	265
		CONTRACT NO. 66M80		
		ILLINOIS	FED. AID PROJECT	

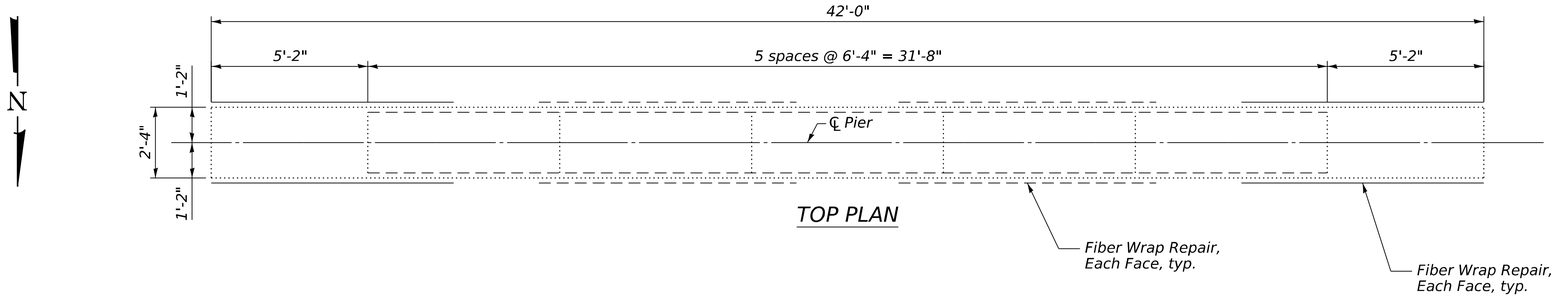

TOP PLAN

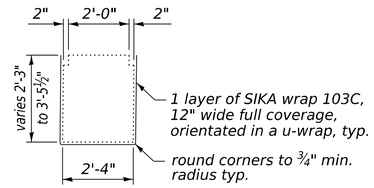

SECTION A-A

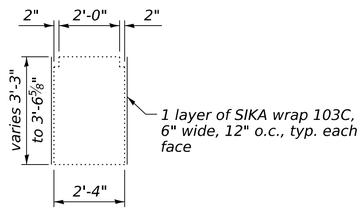

SECTION B-B

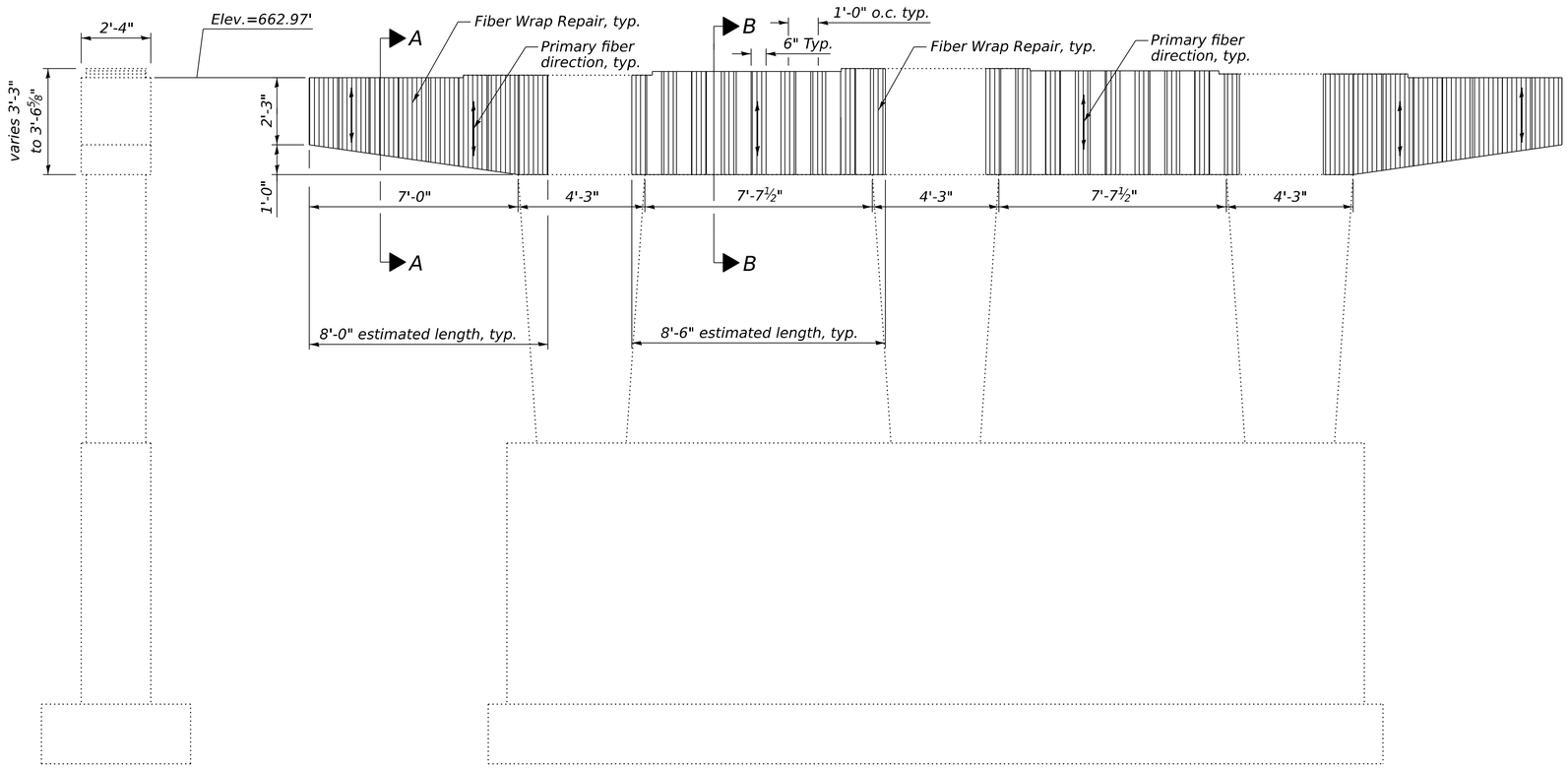

END VIEW

ELEVATION

(North Face)

BILL OF MATERIAL

Fiber Wrap	Sq. Ft.	197

For "Fiber Wrap" Notes, See sheet 39 of 43.

MODEL: Default
FILE NAME: G:\Users\6\66501-05-IDOT-I-57 Structure Projects-TP&W RR and 2nd St\Survey D366M80\SN038-0007_0008\Consultant_Data\Chamlin_2025\Design\0380007_0008-66M80-042-PIER_2_DETS_0008.dgn

Chamlin & Associates

USER NAME = CHAMLIN	DESIGNED - PDF	REVISED -	
	DRAWN - LAG	REVISED -	
	CHECKED - JLS	REVISED -	
PLOT DATE = 2/27/2026	DATE - 04/21/2025	REVISED -	

STATE OF ILLINOIS
DEPARTMENT OF TRANSPORTATION

PIER 2 DETAILS
STRUCTURE NO. 038-0008 (SB)

SCALE: | SHEET 42 OF 43 SHEETS | STA. | TO STA.

F.A.I. RTE.	SECTION	COUNTY	TOTAL SHEETS	SHEET NO.
57	(38-4,38-5)BR,D,CR	IROQUOIS	437	266

CONTRACT NO. 66M80

ILLINOIS | FED. AID PROJECT

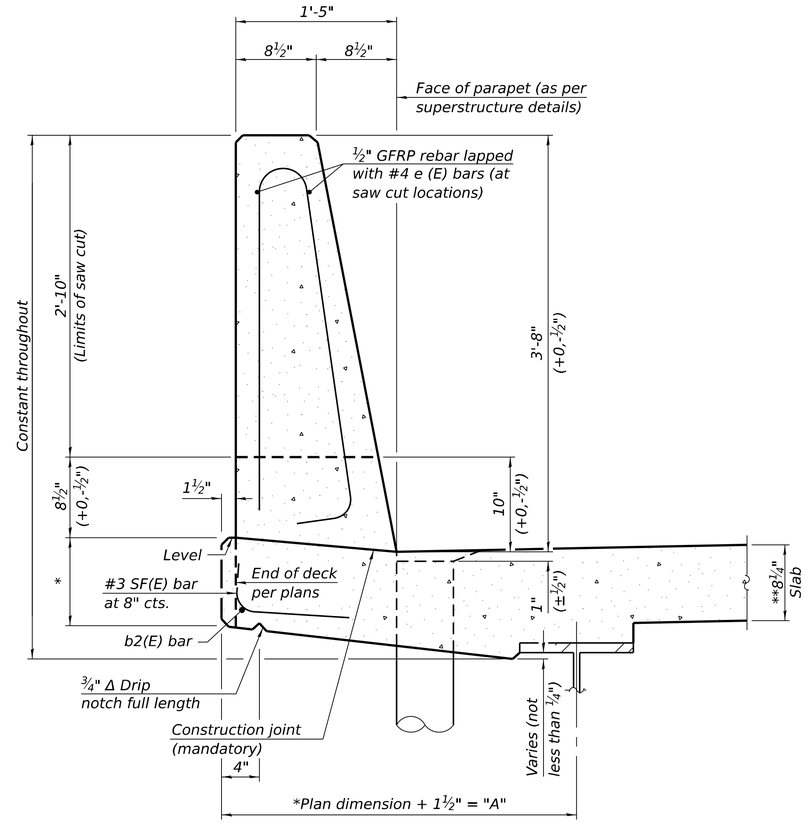

44" CONSTANT-SLOPE PARAPET SECTION

(Showing dimensions, d(E), and ½" Ø GFRP rebar)

*See Superstructure Details.
**Prior to grinding

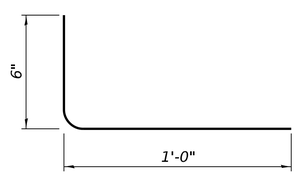

SF(E) BAR

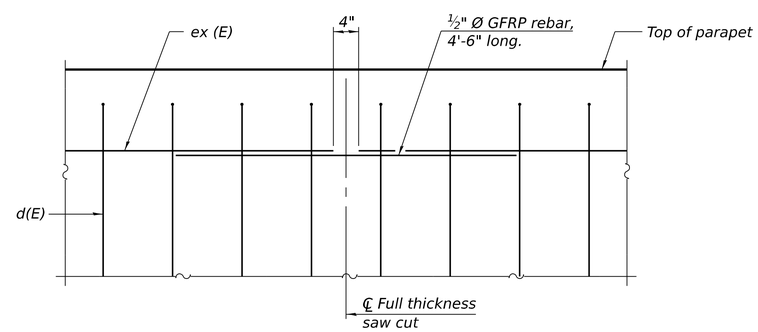

DETAIL - GFRP REBAR STIFFENING ELEVATION

(Place as shown in parapet section at each parapet joint location.)

Notes:
All dimensions shall remain the same as shown on superstructure details, except dimension "A" which is to be revised as shown.
Additional concrete needed to revise dimension "A" 0.00348 cu. yds./ft.
Place full depth aluminum sheets as shown on superstructure details.
Replace all cork joint filler locations with a full thickness saw cut.

SFP 39-44 10/27/2023

MODEL: Default
FILE NAME: G:\Users\6\66501-05-IDOT-I-57 Structure Projects-TP&W RR and 2nd St\Survey D366M80\SN038-0007_0008\Consultant_Data\Chamlin_2025\Design\0380007_0008-66M80-043-CONC_PARA_SLIPFRM_OPT.dgn

Chamlin & Associates

USER NAME = CHAMLIN	DESIGNED - PDF	REVISED -	
	DRAWN - LAG	REVISED -	
	CHECKED - JLS	REVISED -	
PLOT DATE = 2/27/2026	DATE - 04/21/2025	REVISED -	

STATE OF ILLINOIS
DEPARTMENT OF TRANSPORTATION

CONCRETE PARAPET SLIPFORMING OPTION
STRUCTURE NO. 038-0007 (NB) & 038-0008 (SB)

SCALE: SHEET 43 OF 43 SHEETS STA. TO STA.

F.A.I. RTE.	SECTION	COUNTY	TOTAL SHEETS	SHEET NO.
57	(38-4,38-5)BR,D,CR	IROQUOIS	437	267
		CONTRACT NO. 66M80		
		ILLINOIS	FED. AID PROJECT	

Benchmark: BM 0009: Cut "□" on the top of the northeast wing wall of existing SN 038-0009, Station 455+56.57, ±68.05' LT, Elevation 648.37. BM 0010: Cut "□" on the top of the southwest wing wall of existing SN 038-0010, Station 456+50.31, ±68.08' RT, Elevation 648.23.

Existing Structure: Existing SN 038-0009 (northbound) and SN 038-0010 (southbound) were originally constructed in 1967 under F.A.I. Route 57, Section 38-4B-2. In 1976, a bituminous wearing surface and waterproofing membrane system was added. In 1999, the concrete handrail was replaced with Steel Bridge Railing, the abutments were made integral, and a microsilica concrete overlay was applied. The existing structures are three-span reinforced concrete haunched deck slab bridges with concrete spill-thru abutments supported on concrete piles and concrete pile bent piers supported on precast concrete piles. Concrete T-type walls are present between the bridges in line with each abutment. Each bridge is 112'-3" back-to-back of abutments and the widths are 42'-4" out-to-out of deck on a 07°05'00" left-forward skew. The superstructures are to be removed and replaced.

Roadway cross-overs to be utilized to maintain traffic during construction.

No Salvage.

DESIGN SPECIFICATIONS

2020 AASHTO LRFD Bridge Design Specifications, 9th Edition
2006 Seismic Retrofitting Manual for Highway Structures: Part I – Bridges (FHWA-HRT-06-032)

LOADING HL-93

No allowance for future wearing surface.

DESIGN STRESSES

FIELD UNITS (New Const.)
f'c = 4,000 psi (Superstructure)
fy = 60,000 psi (Reinforcement)
FIELD UNITS (Existing Const.)
fc = 1,400 psi
fs = 20,000 psi (Reinforcement)

SEISMIC DATA

Seismic Retrofit Category (SRC) = A
Design Spectral Acceleration at 1.0 sec. (SD1) = 0.111g
Design Spectral Acceleration at 0.2 sec. (SSDS) = 0.179g
Soil Site Class = D
Performance Level = I

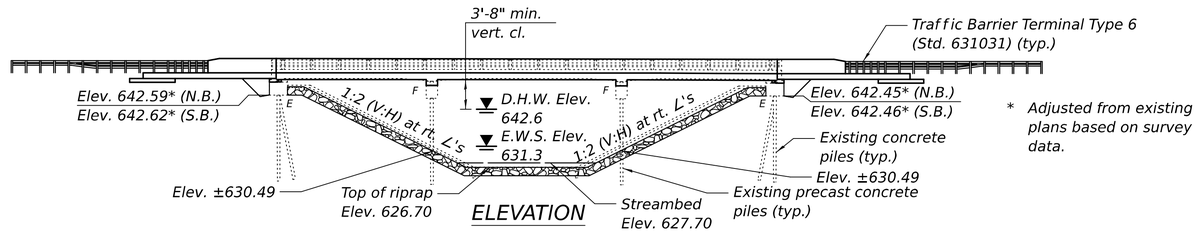

ELEVATION

* Adjusted from existing plans based on survey data.

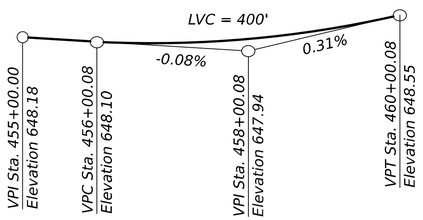

PROFILE GRADE N.B. I-57
(Along P.G.L.)

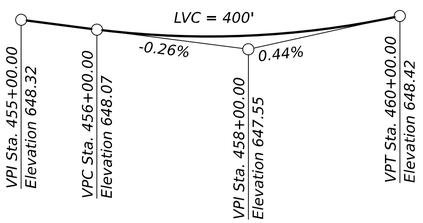

PROFILE GRADE S.B. I-57
(Along P.G.L.)

Up to ¼ inch to be ground off the bridge decks and the bridge approach slabs. The Profile Grades show the final grade after grinding.

SCOPE OF WORK

1. Remove existing superstructure.
2. Reconfigure existing abutments to semi-integral configuration.
3. Replace pier bearings utilizing extensions.
4. Construct new superstructure.
5. Construct new approach slabs.
6. Remove north and south concrete slope walls and replace with riprap.

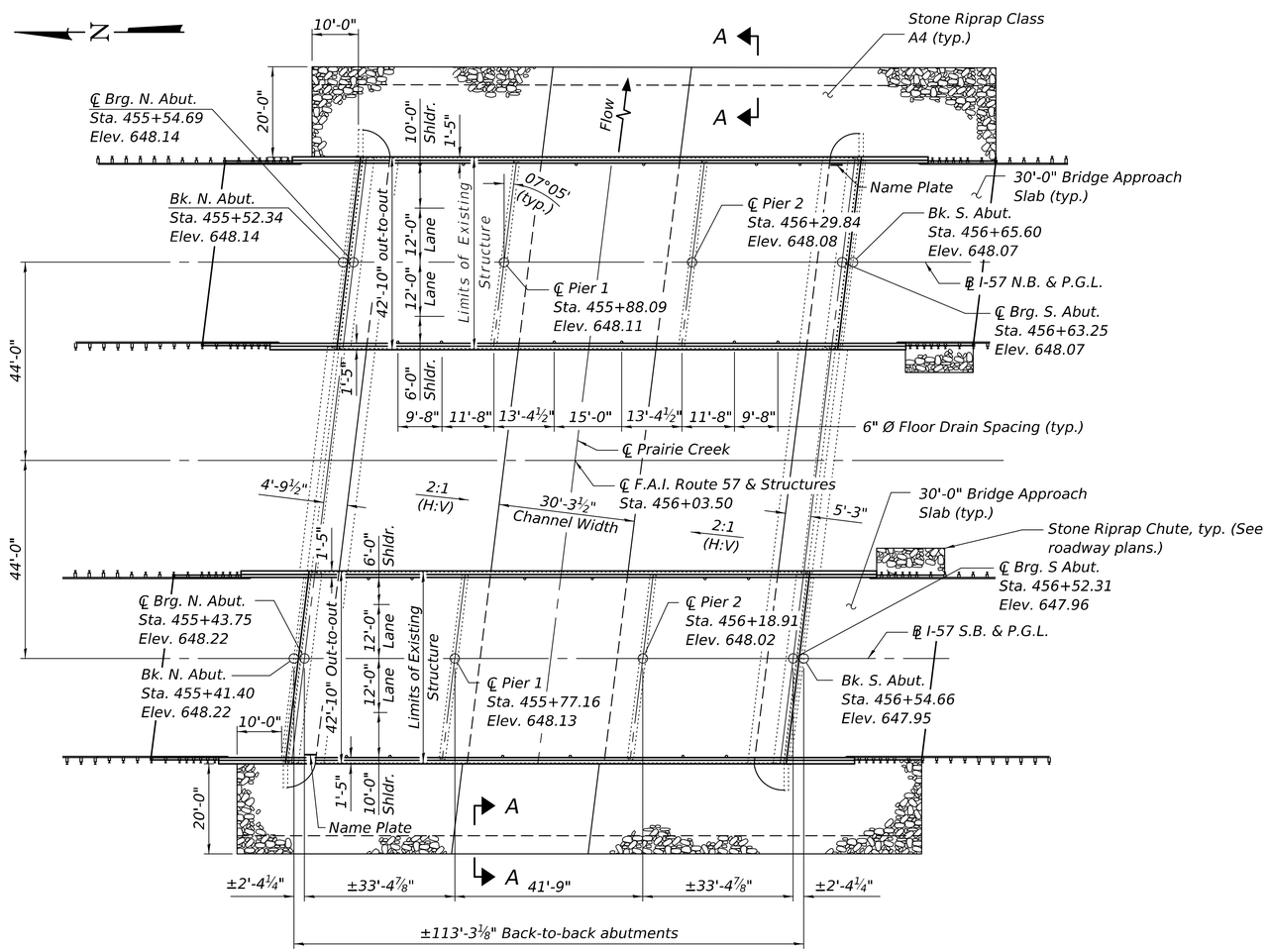

PLAN

Range 11E, 3rd P.M. Range 14W, 2nd P.M.

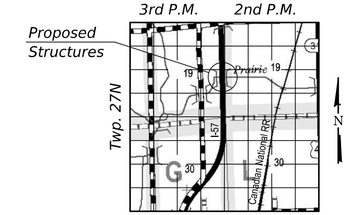

LOCATION SKETCH

LICENSED STRUCTURAL ENGINEER JUSTAN W. MANN 081-005947 STATE OF ILLINOIS

EXPIRES 11-30-2026

GENERAL PLAN & ELEVATION
I-57 OVER PRAIRIE CREEK
F.A.I. ROUTE 57 - SEC. (38-4B-2)BR
IROQUOIS COUNTY
STATION 456+03.50
STRUCTURE NO. 038-0009 (N.B.)
STRUCTURE NO. 038-0010 (S.B.)

DESIGNED -	RYAN P. NEGANGARD	EXAMINED	ENGINEER OF BRIDGE DESIGN
CHECKED -	TIFFANY L. ADAMS		
DRAWN -	ANDRO R. SAMANIEGO	PASSED	ENGINEER OF BRIDGES AND STRUCTURES
CHECKED -	R.P.N. / T.L.A.		

DATE 5/1/2026
REVISED -
REVISED -

STATE OF ILLINOIS
DEPARTMENT OF TRANSPORTATION

SHEET 1 OF 25 SHEETS

F.A.I. RTE.	SECTION	COUNTY	TOTAL SHEETS	SHEET NO.
57	(38-4B-2)BR	IROQUOIS	437	268

CONTRACT NO. 66M80
ILLINOIS | FED. AID PROJECT

MODEL: (1 of) General Plan and Elevation
FILE NAME: pw://ildot-pw.bentley.com:PWIDOT/Documents/IDOT Offices/Bureau of Bridges and Structures/OBM Projects/038009/CADData/Structures/0380009 0010-s68M79-001-GPE.dgn
5/1/2026 12:10:11 PM

INDEX OF SHEETS

1 - General Plan & Elevation
2 - General Data
3 - Stage Construction Details
4 - Temporary Concrete Barrier
5-7 - Top of Slab Elevations
8-11 - Top of Approach Slab Elevations
12-13 - Superstructure
14-15 - Superstructure Details
16 - Diaphragm Details
17 - Pier Extensions
18-20 - Bridge Approach Slab Details
21 - Bearing Details
20-24 - Concrete Removal
25 - Concrete Parapet Slipforming Option

STA. 456+03.50
BUILT 20 BY
STATE OF ILLINOIS
F.A.I. Rt. 57 Sec. (38-4B-2)BR
LOADING HL-93
STR. NO. 038-0009

NAME PLATE

See Std. 515001

STA. 456+03.50
BUILT 20 BY
STATE OF ILLINOIS
F.A.I. Rt. 57 Sec. (38-4B-2)BR
LOADING HL-93
STR. NO. 038-0010

NAME PLATE

See Std. 515001

Existing Name Plate shall be cleaned and relocated next to new Name Plate. Cost included with Name Plates.

GENERAL NOTES

Reinforcement bars designated (E) shall be epoxy coated.

The Contractor shall make allowance for the deflection of forms, shrinkage, and settlement of falsework, in addition to allowance for dead load deflection. Forms for deck slab shall be removed prior to placement of bridge approach slab.

Layout of the slope protection system may be varied to suit ground conditions in the field as directed by the Engineer.

Plan dimensions and details relative to the existing structure have been taken from existing plans are subject to nominal construction variations. The Contractor shall field verify existing dimensions and details affecting new construction and make necessary approved adjustments prior to construction or ordering of materials. Such variations shall not be cause for additional compensation for a change in scope of the work, however, the Contractor will be paid for the quantity actually furnished at the unit price bid for the work.

The existing bearings contain lead plates. The Contractor shall take precautions to deal with the presence of lead on this project.

The Contractor is advised that the existing concrete superstructure is a continuous structure and removal must be done in a proper sequence, possibly with falsework support. The sequence of removal and the use of any required falsework is the responsibility of the Contractor.

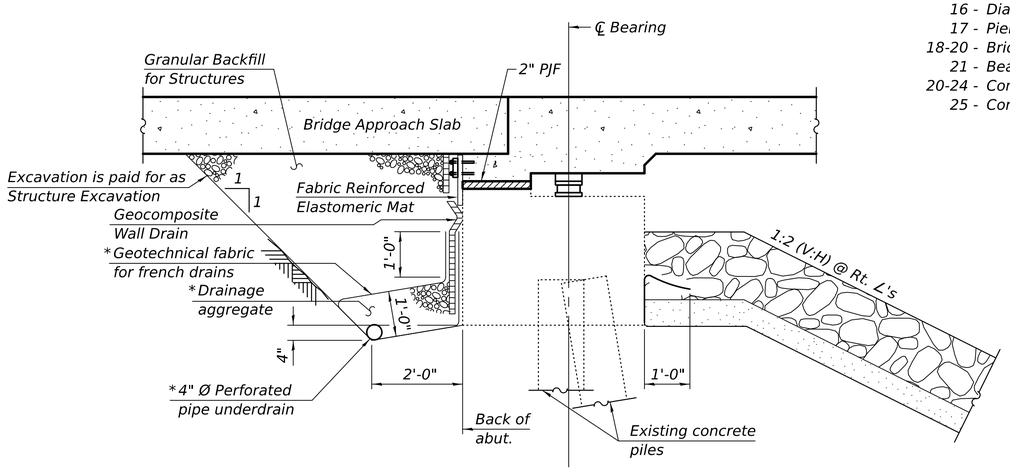

SECTION THRU SEMI-INTEGRAL ABUTMENT

(Horiz. dim. at Rt. ∠'s)

*Included in the cost of Pipe Underdrains for Structures.

Note:
All drainage system components shall extend to 2'-0" from the end of each wingwall except an outlet pipe shall extend until intersecting with the side slopes. The pipes shall drain into concrete headwalls. (See Article 601.05 of the Standard Specifications and Highway Standard 601101).

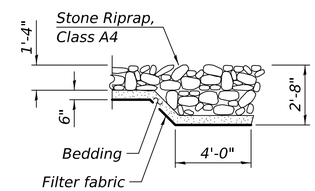

SECTION A-A

TOTAL BILL OF MATERIAL

ITEM	UNIT	SUPER	SUB	TOTAL
Stone Riprap, Class A4	Sq. Yd.		2,464	2,464
Filter Fabric	Sq. Yd.		2,464	2,464
Removal of Existing Superstructures	Each	2		2
Slope Wall Removal	Sq. Yd.		2,188	2,188
Structure Excavation	Cu. Yd.		148	148
Floor Drains	Each	24		24
Concrete Structures	Cu. Yd.		51.0	51.0
Concrete Superstructure	Cu. Yd.	583.8		583.8
Protective Coat	Sq. Yd.	1,811		1,811
Concrete Superstructure (Approach Slab)	Cu. Yd.	240.1		240.1
Reinforcement Bars, Epoxy Coated	Pound	330,640		330,640
Name Plates	Each	2		2
Elastomeric Bearing Assembly, Type 1	Each	28		28
Granular Backfill for Structures	Cu. Yd.		132	132
Geocomposite Wall Drain	Sq. Yd.		88	88
Pipe Underdrains for Structures 4"	Foot		230	230
Bridge Deck Grooving (Longitudinal)	Sq. Yd.	913		913
Diamond Grinding (Bridge Section)	Sq. Yd.	1,651		1,651

WATERWAY INFORMATION

Drainage Area = 36.2 sq. mi. Low Grade Elev. 648.00 @ Sta. 457+00

Flood	Freq. Yr.	Q C.F.S.	Opening Ft² Exist.	Opening Ft² Prop.	Nat. H.W.E.	Head - Ft. Exist.	Head - Ft. Prop.	Headwater El. Exist.	Headwater El. Prop.
Ten-Year	10	1,350	673	785	641.6	0.2	0.2	641.7	641.7
Design	50	2,060	751	869	642.6	0.4	0.4	642.9	642.9
Base	100	2,360	778	897	642.9	0.4	0.4	643.3	643.3
Scour Check	200	2,670	803	924	643.2	0.5	0.5	643.7	643.6
Max. Calc.	500	3,080	833	956	643.5	0.6	0.5	644.1	644.1

Existing 10 Year Average Velocity: 2.0 ft/sec
Proposed 10 Year Average Velocity: 1.7 ft/sec

DESIGN SCOUR ELEVATION TABLE - S.N. 038-0009 (N.B.)

Event / Limit State	Design Scour Elevations (ft.) N. Abut.	Pier 1	Pier 2	S. Abut.	Item 113
Q100	642.59	624.87	624.87	642.45	8
Q200	642.59	624.87	624.87	642.45	
Design	642.59	624.87	624.87	642.45	

DESIGN SCOUR ELEVATION TABLE - S.N. 038-0010 (S.B.)

Event / Limit State	Design Scour Elevations (ft.) N. Abut.	Pier 1	Pier 2	S. Abut.	Item 113
Q100	642.62	624.87	624.87	642.46	8
Q200	642.62	624.87	624.87	642.46	
Design	642.62	624.87	624.87	642.46	

MODEL: 0380009 0010-66M80-002
FILE NAME: pw://ildot-pw.bentley.com:PWIDOT\Documents\IDOT Offices\Bureau of Bridges and Structures\OBM Projects\0380009\CADData\Structures\0380009-66M80.dgn

DESIGNED -	RYAN P. NEGANGARD	EXAMINED	ENGINEER OF BRIDGE DESIGN
CHECKED -	TIFFANY L. ADAMS	DATE	MAY 1, 2026
DRAWN -	ANDRO R. SAMANIEGO	PASSED	ENGINEER OF BRIDGES AND STRUCTURES
CHECKED -	R.P.N. / T.L.A.	REVISED -	
		REVISED -	

5/1/2026 2:42:56 PM

STATE OF ILLINOIS
DEPARTMENT OF TRANSPORTATION

GENERAL DATA
STRUCTURE NO. 038-0009 (NB) & 038-0010 (SB)

SHEET 2 OF 25 SHEETS

F.A.I. RTE.	SECTION	COUNTY	TOTAL SHEETS	SHEET NO.
57	(38-4B-2)BR	IROQUOIS	437	269

CONTRACT NO. 66M80

ILLINOIS | FED. AID PROJECT

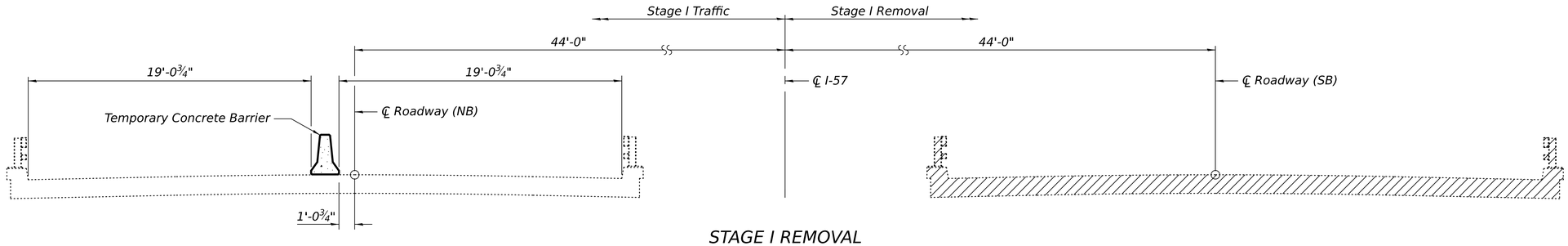

STAGE I REMOVAL

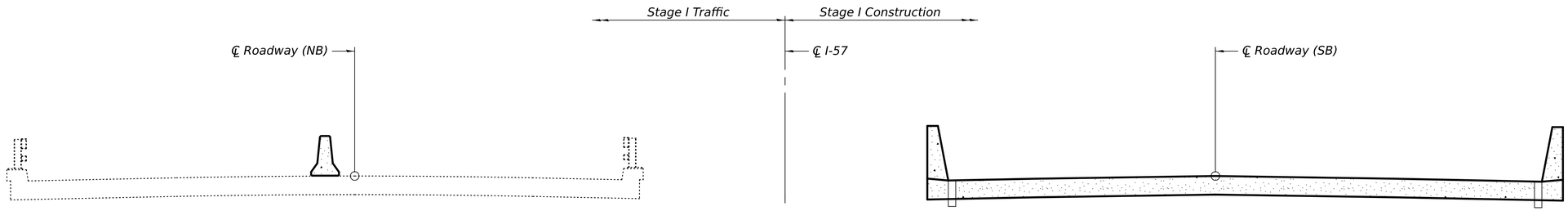

STAGE I CONSTRUCTION

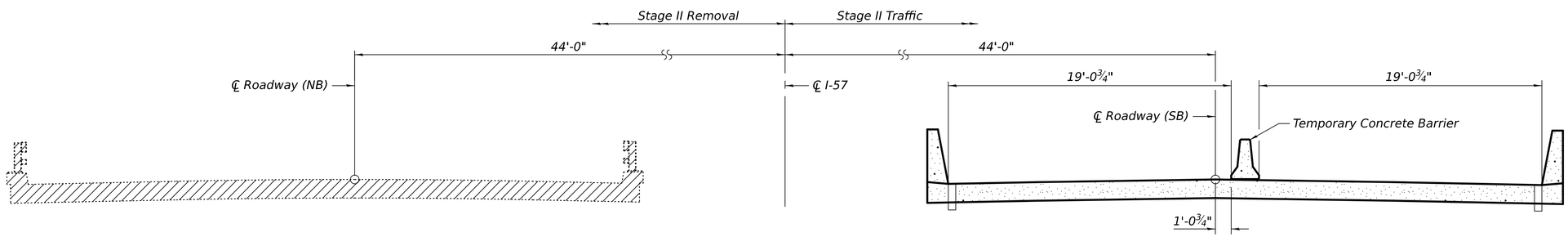

STAGE II REMOVAL

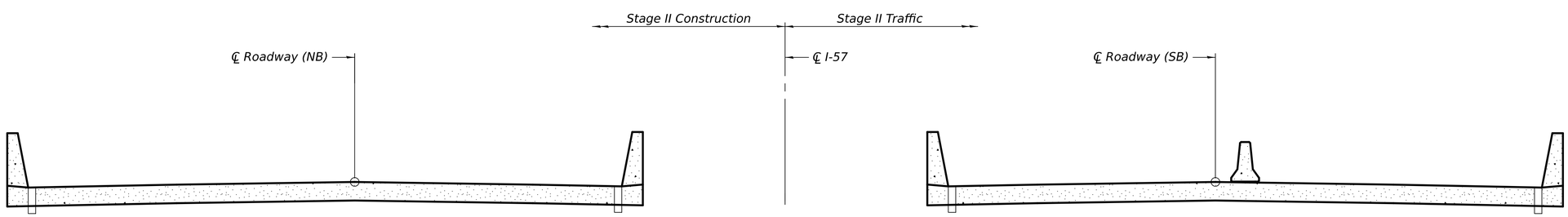

STAGE II CONSTRUCTION

Notes:
All cross sections are looking South.
Hatched area indicates Removal of Existing Superstructures.
For quantity of Temporary Concrete Barrier,
see Roadway Plans. See sheet 4 of 25 for details.

MODEL: 0380009 0010-66M80-003
FILE NAME: pw://ildot-pw.bentley.com:PWIDOT/Documents/IDOT Offices/Bureau of Bridges and Structures/OBM Projects/0380009/CADData/Structures/0380009-66M80.dgn

DESIGNED - RYAN P. NEGANGARD	EXAMINED	ENGINEER OF BRIDGE DESIGN	DATE	MAY 1, 2026	
CHECKED - TIFFANY L. ADAMS					
DRAWN - ANDRO R. SAMANIEGO	PASSED	ENGINEER OF BRIDGES AND STRUCTURES	REVISED -		
CHECKED - R.P.N. / T.L.A.			REVISED -		

STATE OF ILLINOIS
DEPARTMENT OF TRANSPORTATION

STAGE CONSTRUCTION DETAILS
STRUCTURE NO. 038-0009 (NB) & 038-0010 (SB)

SHEET 3 OF 25 SHEETS

F.A.I. RTE.	SECTION	COUNTY	TOTAL SHEETS	SHEET NO.
57	(38-4B-2)BR	IROQUOIS	437	270
		CONTRACT NO. 66M80		
	ILLINOIS	FED. AID PROJECT		

5/1/2026 2:42:57 PM

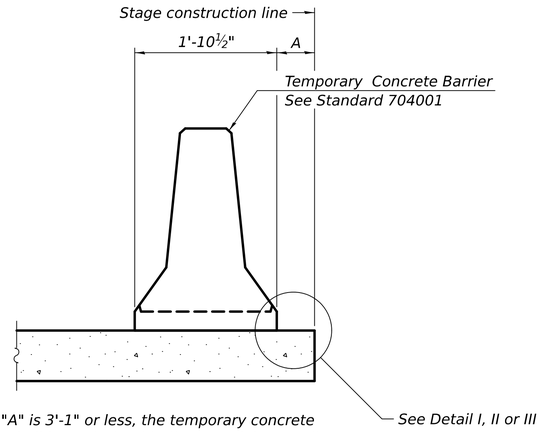

When "A" is 3'-1" or less, the temporary concrete barrier shall be restrained to the new slab according to Detail I, II or III. No restraint is required when "A" is greater than 3'-1".

NEW SLAB OR NEW DECK BEAM

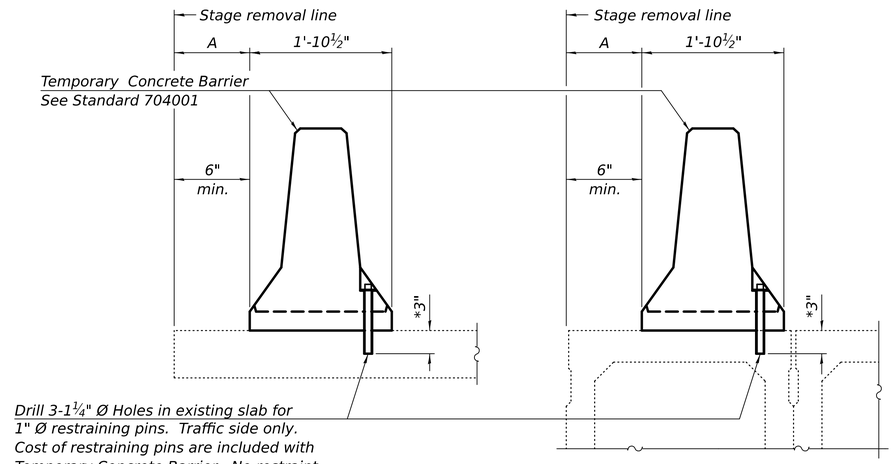

EXISTING SLAB

* When hot-mix asphalt wearing surface is present, embedment shall be 3" plus the wearing surface depth.

EXISTING DECK BEAM

SECTIONS THRU SLAB OR DECK BEAM

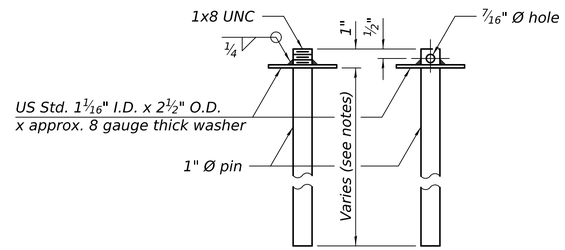

RESTRAINING PIN

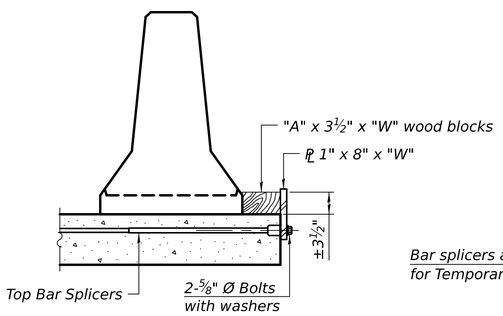

DETAIL I

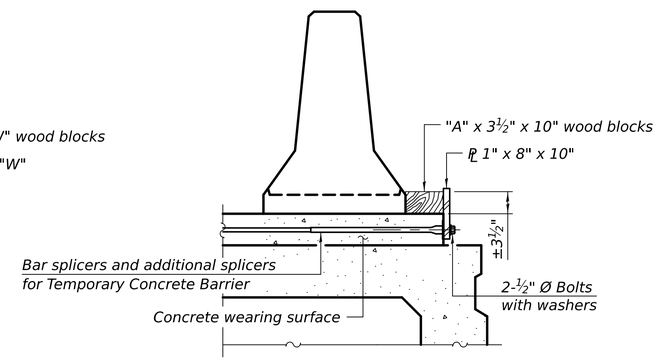

DETAIL II

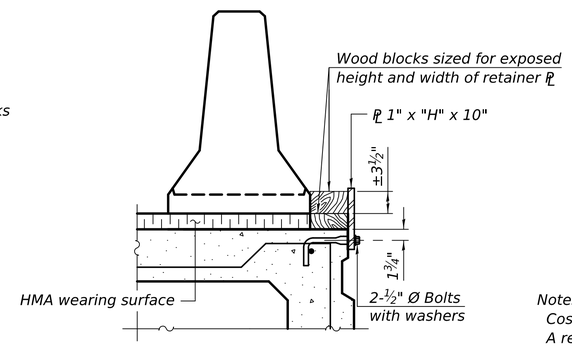

DETAIL III

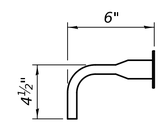

BAR SPLICER FOR #4 BAR - DETAIL III

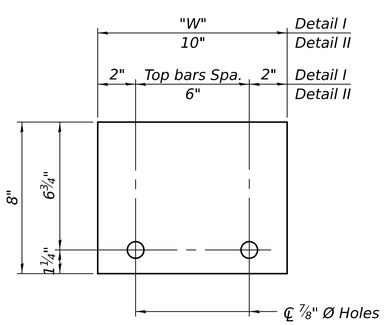

STEEL RETAINER PL 1" x 8" x "W"

(Detail I and II)

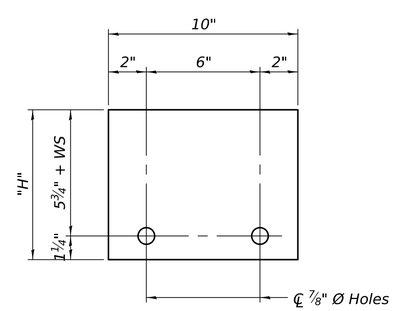

STEEL RETAINER PL 1" x "H" x 10"

(Detail III)

RAILING CRITERIA

NCHRP 350 Test Level	3
Railing Weight (plf)	440

Notes:

Cost of retainer assembly is included with Temporary Concrete Barrier.

A retainer assembly shall be located at the approximate ℄ of each temporary concrete barrier.

The retainer plate shall not be removed until the concrete on the adjacent stage is ready to be poured. For Detail III applications the retainer plate shall not be removed until just prior to placing the adjacent beam.

When the 'A' dimension is less than 1½", the wood block shall be omitted and the barrier shall be placed in direct contact with the steel retainer plate. For deck beam applications the minimum required 'A' distance is 6" to accommodate the shear key clamping device.

Detail I - Installation for a new bridge deck or bridge slab.

Detail II - Installation for a new deck beam with an initial concrete wearing surface. Additional bar splicers shall be provided at 6'-0" centers and paired with the bar splicers of the concrete wearing surface reinforcement to accommodate the installation of the retainer assemblies. The cost of the additional bar splicers is included with the concrete wearing surface.

Detail III - Installation for a new deck beam with no initial wearing surface or with an initial hot-mix asphalt (HMA) wearing surface present. The deck beam directly beneath the temporary concrete barrier shall be fabricated with bar splicer inserts in the side of the beam, as detailed, to accommodate the installation of the retainer assemblies. A pair of bar splicers, 6" apart, shall be placed at 6'-0" centers along the length of the beam. The cost of the bar splicers is included with the deck beam.

R-27

5-15-2023

DESIGNED - RYAN P. NEGANGARD	EXAMINED	ENGINEER OF BRIDGE DESIGN	DATE MAY 1, 2026
CHECKED - TIFFANY L. ADAMS			
DRAWN - ANDRO R. SAMANIEGO	PASSED	ENGINEER OF BRIDGES AND STRUCTURES	REVISED -
CHECKED - R.P.N. / T.L.A.			REVISED -

STATE OF ILLINOIS
DEPARTMENT OF TRANSPORTATION

TEMPORARY CONCRETE BARRIER
STRUCTURE NO. 038-0009 (NB) & 038-0010 (SB)

SHEET 4 OF 25 SHEETS

F.A.I. RTE.	SECTION	COUNTY	TOTAL SHEETS	SHEET NO.
57	(38-4B-2)BR	IROQUOIS	437	271
		CONTRACT NO. 66M80		
		ILLINOIS	FED. AID PROJECT	

MODEL: 0380009 0010-66M80-004
FILE NAME: pw://ildot-pw.bentley.com:PW\IDOT\Documents\IDOT Offices\Bureau of Bridges and Structures\OBM Projects\0380009\CADData\Structures\0380009-66M80.dgn
5/1/2026 2:42:58 PM

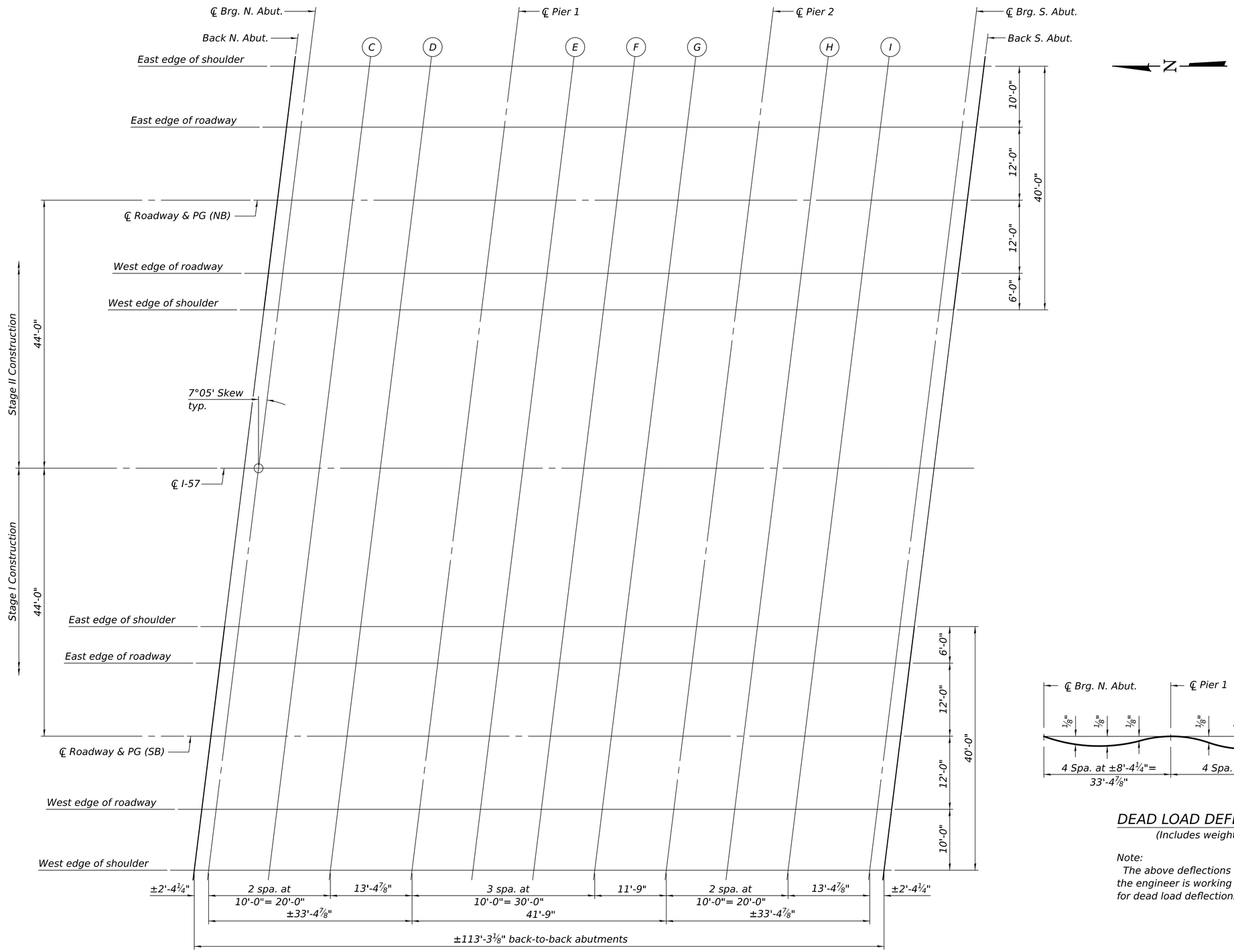

PLAN

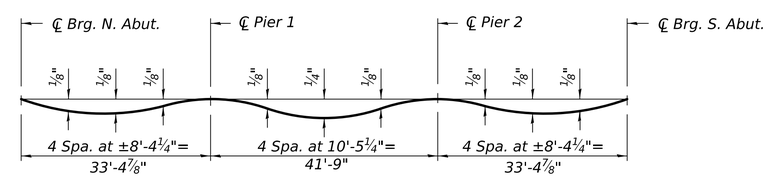

DEAD LOAD DEFLECTION DIAGRAM

(Includes weight of concrete only.)

Note:
The above deflections are not to be used in the field if the engineer is working from the grade elevations adjusted for dead load deflections and grinding.

MODEL: 0380009 0010-66M80-005
FILE NAME: pw://ildot-pw.bentley.com:PWIDOT/Documents/IDOT Offices/Bureau of Bridges and Structures/OBM Projects/0380009/CADData/Structures/0380009-66M80.dgn

DESIGNED - RYAN P. NEGANGARD	EXAMINED	DATE MAY 1, 2026	STATE OF ILLINOIS DEPARTMENT OF TRANSPORTATION
CHECKED - TIFFANY L. ADAMS	ENGINEER OF BRIDGE DESIGN		
DRAWN - ANDRO R. SAMANIEGO	PASSED	REVISED -	
CHECKED - R.P.N. / T.L.A.	ENGINEER OF BRIDGES AND STRUCTURES	REVISED -	

TOP OF SLAB ELEVATIONS
STRUCTURE NO. 038-0009 (NB) & 038-0010 (SB)

SHEET 5 OF 25 SHEETS

F.A.I. RTE.	SECTION	COUNTY	TOTAL SHEETS	SHEET NO.
57	(38-4B-2)BR	IROQUOIS	437	272
		CONTRACT NO. 66M80		
		ILLINOIS FED. AID PROJECT		

5/1/2026 2:42:59 PM

EAST EDGE OF SHOULDER

Location	Station	Offset	Theoretical Grade Elevations	Theoretical Grade Elevations Adjusted For Dead Load Deflection and Grinding
Bk. N. Abut.	455+55.07	-22.00	647.76	647.78
℄ Brg. N. Abut.	455+57.42	-22.00	647.75	647.77
C	455+67.42	-22.00	647.75	647.78
D	455+77.42	-22.00	647.74	647.77
℄ Pier 1	455+90.83	-22.00	647.73	647.75
E	456+00.83	-22.00	647.72	647.75
F	456+10.83	-22.00	647.71	647.75
G	456+20.83	-22.00	647.71	647.74
℄ Pier 2	456+32.58	-22.00	647.70	647.72
H	456+42.58	-22.00	647.69	647.72
I	456+52.58	-22.00	647.69	647.72
℄ Brg. S. Abut.	456+65.98	-22.00	647.69	647.71
Bk. S. Abut.	456+68.33	-22.00	647.69	647.71

EAST EDGE OF ROADWAY

Location	Station	Offset	Theoretical Grade Elevations	Theoretical Grade Elevations Adjusted For Dead Load Deflection and Grinding
Bk. N. Abut.	455+53.83	-12.00	647.96	647.98
℄ Brg. N. Abut.	455+56.18	-12.00	647.96	647.98
C	455+66.18	-12.00	647.95	647.98
D	455+76.18	-12.00	647.94	647.97
℄ Pier 1	455+89.58	-12.00	647.93	647.95
E	455+99.58	-12.00	647.92	647.95
F	456+09.58	-12.00	647.91	647.95
G	456+19.58	-12.00	647.91	647.94
℄ Pier 2	456+31.33	-12.00	647.90	647.92
H	456+41.33	-12.00	647.90	647.92
I	456+51.33	-12.00	647.89	647.93
℄ Brg. S. Abut.	456+64.74	-12.00	647.89	647.91
Bk. S. Abut.	456+67.09	-12.00	647.89	647.91

℄ ROADWAY & PG (NB)

Location	Station	Offset	Theoretical Grade Elevations	Theoretical Grade Elevations Adjusted For Dead Load Deflection and Grinding
Bk. N. Abut.	455+52.34	0.00	648.14	648.16
℄ Brg. N. Abut.	455+54.69	0.00	648.14	648.16
C	455+64.69	0.00	648.13	648.16
D	455+74.69	0.00	648.12	648.15
℄ Pier 1	455+88.09	0.00	648.11	648.13
E	455+98.09	0.00	648.10	648.13
F	456+08.09	0.00	648.09	648.13
G	456+18.09	0.00	648.09	648.12
℄ Pier 2	456+29.84	0.00	648.08	648.10
H	456+39.84	0.00	648.08	648.10
I	456+49.84	0.00	648.07	648.11
℄ Brg. S. Abut.	456+63.25	0.00	648.07	648.09
Bk. S. Abut.	456+65.60	0.00	648.07	648.09

WEST EDGE OF ROADWAY

Location	Station	Offset	Theoretical Grade Elevations	Theoretical Grade Elevations Adjusted For Dead Load Deflection and Grinding
Bk. N. Abut.	455+50.85	12.00	647.96	647.98
℄ Brg. N. Abut.	455+53.20	12.00	647.96	647.98
C	455+63.20	12.00	647.95	647.98
D	455+73.20	12.00	647.94	647.97
℄ Pier 1	455+86.60	12.00	647.93	647.95
E	455+96.60	12.00	647.92	647.95
F	456+06.60	12.00	647.91	647.95
G	456+16.60	12.00	647.91	647.94
℄ Pier 2	456+28.35	12.00	647.90	647.92
H	456+38.35	12.00	647.90	647.92
I	456+48.35	12.00	647.89	647.93
℄ Brg. S. Abut.	456+61.75	12.00	647.89	647.91
Bk. S. Abut.	456+64.11	12.00	647.89	647.91

WEST EDGE OF SHOULDER

Location	Station	Offset	Theoretical Grade Elevations	Theoretical Grade Elevations Adjusted For Dead Load Deflection and Grinding
Bk. N. Abut.	455+50.10	18.00	647.84	647.86
℄ Brg. N. Abut.	455+52.45	18.00	647.84	647.86
C	455+62.45	18.00	647.83	647.86
D	455+72.45	18.00	647.82	647.85
℄ Pier 1	455+85.86	18.00	647.81	647.83
E	455+95.86	18.00	647.80	647.83
F	456+05.86	18.00	647.80	647.83
G	456+15.86	18.00	647.79	647.82
℄ Pier 2	456+27.61	18.00	647.78	647.80
H	456+37.61	18.00	647.78	647.80
I	456+47.61	18.00	647.77	647.81
℄ Brg. S. Abut.	456+61.01	18.00	647.77	647.79
Bk. S. Abut.	456+63.36	18.00	647.77	647.79

EAST EDGE OF SHOULDER

Location	Station	Offset	Theoretical Grade Elevations	Theoretical Grade Elevations Adjusted For Dead Load Deflection and Grinding
Bk. N. Abut.	455+43.64	-18.00	647.92	647.94
℄ Brg. N. Abut.	455+45.99	-18.00	647.91	647.93
C	455+55.99	-18.00	647.88	647.92
D	455+65.99	-18.00	647.86	647.89
℄ Pier 1	455+79.39	-18.00	647.82	647.84
E	455+89.39	-18.00	647.80	647.83
F	455+99.39	-18.00	647.77	647.81
G	456+09.39	-18.00	647.75	647.78
℄ Pier 2	456+21.14	-18.00	647.72	647.74
H	456+31.14	-18.00	647.70	647.73
I	456+41.14	-18.00	647.68	647.71
℄ Brg. S. Abut.	456+54.55	-18.00	647.65	647.67
Bk. S. Abut.	456+56.90	-18.00	647.65	647.67

EAST EDGE OF ROADWAY

Location	Station	Offset	Theoretical Grade Elevations	Theoretical Grade Elevations Adjusted For Dead Load Deflection and Grinding
Bk. N. Abut.	455+42.89	-12.00	648.04	648.06
℄ Brg. N. Abut.	455+45.25	-12.00	648.03	648.05
C	455+55.25	-12.00	648.01	648.04
D	455+65.25	-12.00	647.98	648.01
℄ Pier 1	455+78.65	-12.00	647.95	647.97
E	455+88.65	-12.00	647.92	647.95
F	455+98.65	-12.00	647.89	647.93
G	456+08.65	-12.00	647.87	647.90
℄ Pier 2	456+20.40	-12.00	647.84	647.86
H	456+30.40	-12.00	647.82	647.85
I	456+40.40	-12.00	647.80	647.83
℄ Brg. S. Abut.	456+53.80	-12.00	647.78	647.80
Bk. S. Abut.	456+56.15	-12.00	647.77	647.79

℄ ROADWAY & PG (SB)

Location	Station	Offset	Theoretical Grade Elevations	Theoretical Grade Elevations Adjusted For Dead Load Deflection and Grinding
Bk. N. Abut.	455+41.40	0.00	648.22	648.24
℄ Brg. N. Abut.	455+43.75	0.00	648.22	648.24
C	455+53.75	0.00	648.19	648.22
D	455+63.75	0.00	648.16	648.20
℄ Pier 1	455+77.16	0.00	648.13	648.15
E	455+87.16	0.00	648.10	648.13
F	455+97.16	0.00	648.08	648.12
G	456+07.16	0.00	648.05	648.08
℄ Pier 2	456+18.91	0.00	648.02	648.04
H	456+28.91	0.00	648.00	648.03
I	456+38.91	0.00	647.98	648.02
℄ Brg. S. Abut.	456+52.31	0.00	647.96	647.98
Bk. S. Abut.	456+54.66	0.00	647.95	647.97

WEST EDGE OF ROADWAY

Location	Station	Offset	Theoretical Grade Elevations	Theoretical Grade Elevations Adjusted For Dead Load Deflection and Grinding
Bk. N. Abut.	455+39.91	12.00	648.05	648.07
℄ Brg. N. Abut.	455+42.26	12.00	648.04	648.06
C	455+52.26	12.00	648.01	648.05
D	455+62.26	12.00	647.99	648.02
℄ Pier 1	455+75.67	12.00	647.95	647.97
E	455+85.67	12.00	647.93	647.96
F	455+95.67	12.00	647.90	647.94
G	456+05.67	12.00	647.88	647.91
℄ Pier 2	456+17.42	12.00	647.85	647.87
H	456+27.42	12.00	647.83	647.85
I	456+37.42	12.00	647.80	647.84
℄ Brg. S. Abut.	456+50.82	12.00	647.78	647.80
Bk. S. Abut.	456+53.17	12.00	647.78	647.80

WEST EDGE OF SHOULDER

Location	Station	Offset	Theoretical Grade Elevations	Theoretical Grade Elevations Adjusted For Dead Load Deflection and Grinding
Bk. N. Abut.	455+38.67	22.00	647.85	647.87
℄ Brg. N. Abut.	455+41.02	22.00	647.84	647.86
C	455+51.02	22.00	647.82	647.85
D	455+61.02	22.00	647.79	647.82
℄ Pier 1	455+74.42	22.00	647.76	647.78
E	455+84.42	22.00	647.73	647.76
F	455+94.42	22.00	647.70	647.74
G	456+04.42	22.00	647.68	647.71
℄ Pier 2	456+16.17	22.00	647.65	647.67
H	456+26.17	22.00	647.63	647.66
I	456+36.17	22.00	647.61	647.64
℄ Brg. S. Abut.	456+49.58	22.00	647.58	647.60
Bk. S. Abut.	456+51.93	22.00	647.58	647.60

EAST EDGE OF SHOULDER

Location	Station	Offset	Theoretical Grade Elevations	Theoretical Grade Elevations Adjusted For Grinding
N. End of N. Appr. Slab	455+26.08	-22.00	647.78	647.80
A	455+36.08	-22.00	647.77	647.79
B	455+46.08	-22.00	647.76	647.78
S. End of N. Appr. Slab	455+56.08	-22.00	647.76	647.78

EAST EDGE OF ROADWAY

Location	Station	Offset	Theoretical Grade Elevations	Theoretical Grade Elevations Adjusted For Grinding
N. End of N. Appr. Slab	455+24.84	-12.00	647.98	648.00
A	455+34.84	-12.00	647.97	647.99
B	455+44.84	-12.00	647.96	647.98
S. End of N. Appr. Slab	455+54.84	-12.00	647.96	647.98

℄ ROADWAY & PG (NB)

Location	Station	Offset	Theoretical Grade Elevations	Theoretical Grade Elevations Adjusted For Grinding
N. End of N. Appr. Slab	455+23.35	0.00	648.16	648.18
A	455+33.35	0.00	648.15	648.17
B	455+43.35	0.00	648.15	648.17
S. End of N. Appr. Slab	455+53.35	0.00	648.14	648.16

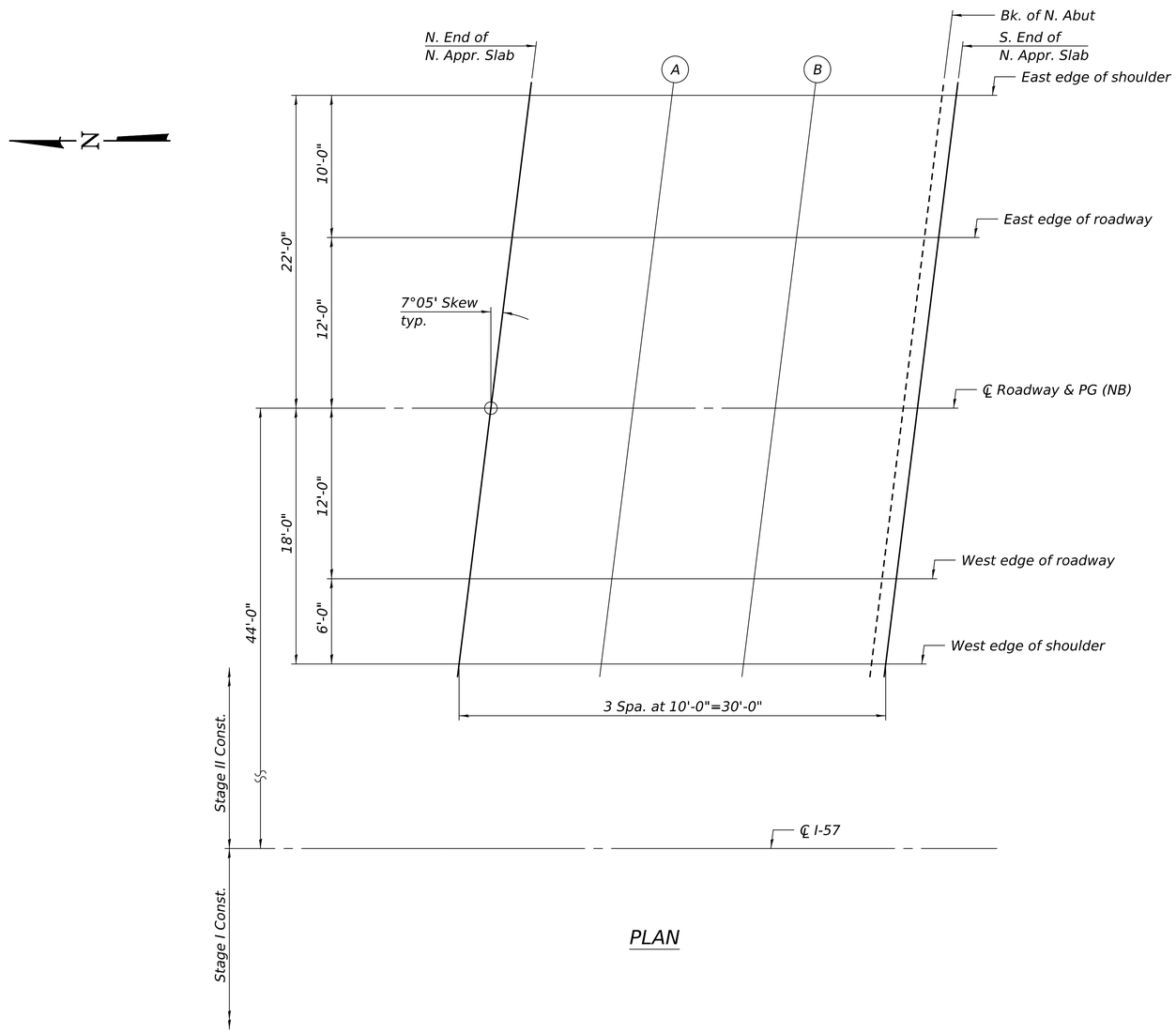

PLAN

WEST EDGE OF ROADWAY

Location	Station	Offset	Theoretical Grade Elevations	Theoretical Grade Elevations Adjusted For Grinding
N. End of N. Appr. Slab	455+21.86	12.00	647.98	648.00
A	455+31.86	12.00	647.97	647.99
B	455+41.86	12.00	647.97	647.99
S. End of N. Appr. Slab	455+51.86	12.00	647.96	647.98

WEST EDGE OF SHOULDER

Location	Station	Offset	Theoretical Grade Elevations	Theoretical Grade Elevations Adjusted For Grinding
N. End of N. Appr. Slab	455+21.11	18.00	647.86	647.88
A	455+31.11	18.00	647.86	647.88
B	455+41.11	18.00	647.85	647.87
S. End of N. Appr. Slab	455+51.11	18.00	647.84	647.86

EAST EDGE OF SHOULDER

Location	Station	Offset	Theoretical Grade Elevations	Theoretical Grade Elevations Adjusted For Grinding
N. End of S. Appr. Slab	456+67.32	-22.00	647.69	647.71
J	456+77.32	-22.00	647.69	647.71
K	456+87.32	-22.00	647.69	647.71
S. End of S. Appr. Slab	456+97.32	-22.00	647.69	647.71

EAST EDGE OF ROADWAY

Location	Station	Offset	Theoretical Grade Elevations	Theoretical Grade Elevations Adjusted For Grinding
N. End of S. Appr. Slab	456+66.08	-12.00	647.89	647.91
J	456+76.08	-12.00	647.89	647.91
K	456+86.08	-12.00	647.89	647.91
S. End of S. Appr. Slab	456+96.08	-12.00	647.89	647.91

℄ ROADWAY & PG (NB)

Location	Station	Offset	Theoretical Grade Elevations	Theoretical Grade Elevations Adjusted For Grinding
N. End of S. Appr. Slab	456+64.59	0.00	648.07	648.09
J	456+74.59	0.00	648.07	648.09
K	456+84.59	0.00	648.07	648.09
S. End of S. Appr. Slab	456+94.59	0.00	648.07	648.09

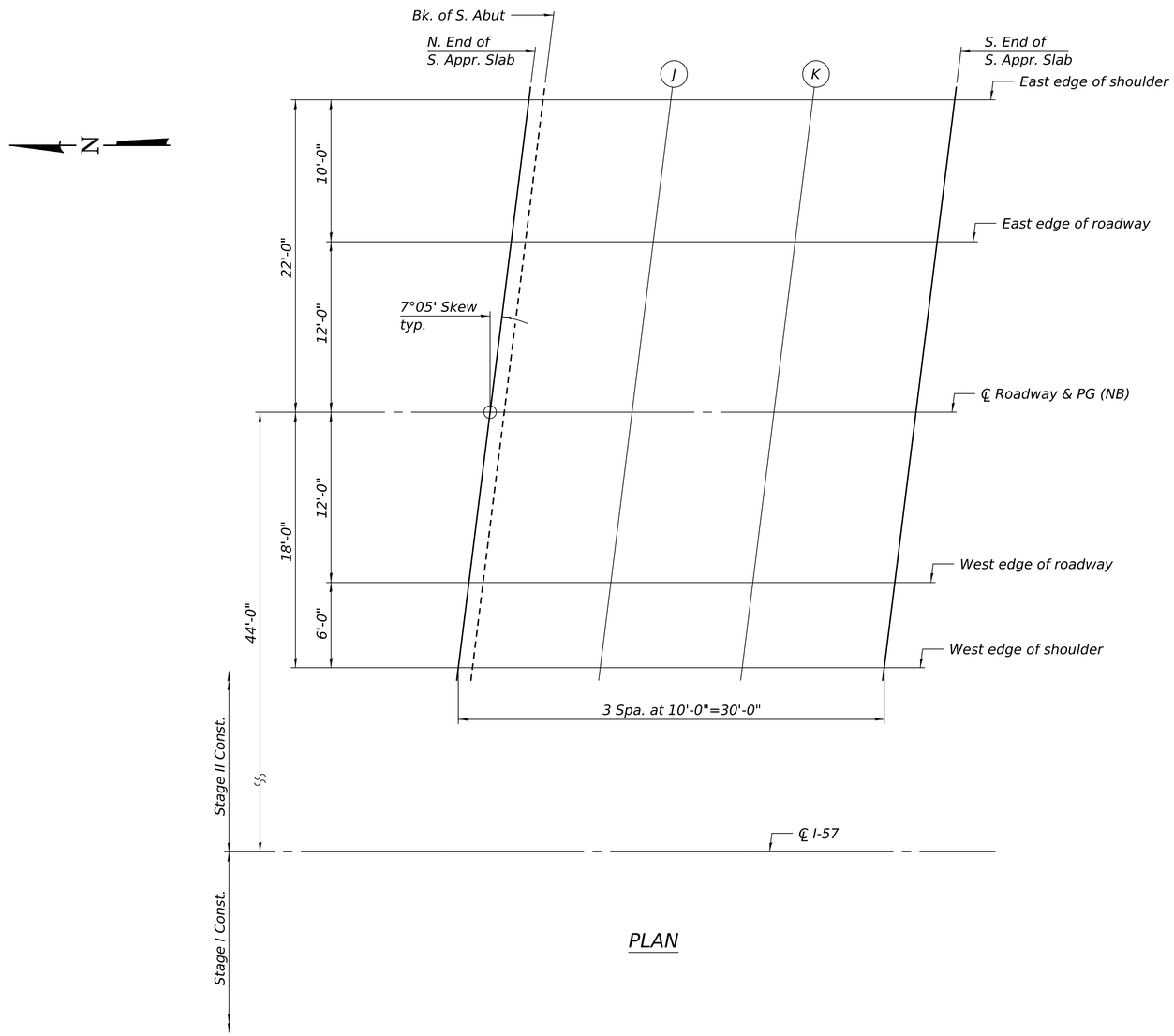

PLAN

WEST EDGE OF ROADWAY

Location	Station	Offset	Theoretical Grade Elevations	Theoretical Grade Elevations Adjusted For Grinding
N. End of S. Appr. Slab	456+63.10	12.00	647.89	647.91
J	456+73.10	12.00	647.89	647.91
K	456+83.10	12.00	647.89	647.91
S. End of S. Appr. Slab	456+93.10	12.00	647.89	647.91

WEST EDGE OF SHOULDER

Location	Station	Offset	Theoretical Grade Elevations	Theoretical Grade Elevations Adjusted For Grinding
N. End of S. Appr. Slab	456+62.35	18.00	647.77	647.79
J	456+72.35	18.00	647.77	647.79
K	456+82.35	18.00	647.77	647.79
S. End of S. Appr. Slab	456+92.35	18.00	647.77	647.79

MODEL: 0380009 0010-66M80-009
FILE NAME: pw://ildot-pw.bentley.com:PWIDOT\Documents\IDOT Offices\Bureau of Bridges and Structures\OBM Projects\0380009\CADData\Structures\0380009-66M80.dgn
5/1/2026 2:43:01 PM

DESIGNED - RYAN P. NEGANGARD	EXAMINED	DATE MAY 1, 2026	
CHECKED - TIFFANY L. ADAMS	ENGINEER OF BRIDGE DESIGN		
DRAWN - ANDRO R. SAMANIEGO	PASSED	REVISED -	
CHECKED - R.P.N. / T.L.A.	ENGINEER OF BRIDGES AND STRUCTURES	REVISED -	

STATE OF ILLINOIS
DEPARTMENT OF TRANSPORTATION

TOP OF SOUTH APPROACH SLAB ELEVATIONS
STRUCTURE NO. 038-0009 (NB)

SHEET 9 OF 25 SHEETS

F.A.I. RTE.	SECTION	COUNTY	TOTAL SHEETS	SHEET NO.
57	(38-4B-2)BR	IROQUOIS	437	276

CONTRACT NO. 66M80

ILLINOIS | FED. AID PROJECT

EAST EDGE OF SHOULDER

Location	Station	Offset	Theoretical Grade Elevations	Theoretical Grade Elevations Adjusted For Grinding
N. End of N. Appr. Slab	455+14.65	-18.00	647.99	648.01
A	455+24.65	-18.00	647.97	647.99
B	455+34.65	-18.00	647.94	647.96
S. End of N. Appr. Slab	455+44.65	-18.00	647.91	647.93

EAST EDGE OF ROADWAY

Location	Station	Offset	Theoretical Grade Elevations	Theoretical Grade Elevations Adjusted For Grinding
N. End of N. Appr. Slab	455+13.90	-12.00	648.11	648.13
A	455+23.90	-12.00	648.09	648.11
B	455+33.90	-12.00	648.06	648.08
S. End of N. Appr. Slab	455+43.90	-12.00	648.04	648.06

℄ ROADWAY & PG (SB)

Location	Station	Offset	Theoretical Grade Elevations	Theoretical Grade Elevations Adjusted For Grinding
N. End of N. Appr. Slab	455+12.41	0.00	648.30	648.32
A	455+22.41	0.00	648.27	648.29
B	455+32.41	0.00	648.25	648.27
S. End of N. Appr. Slab	455+42.41	0.00	648.22	648.24

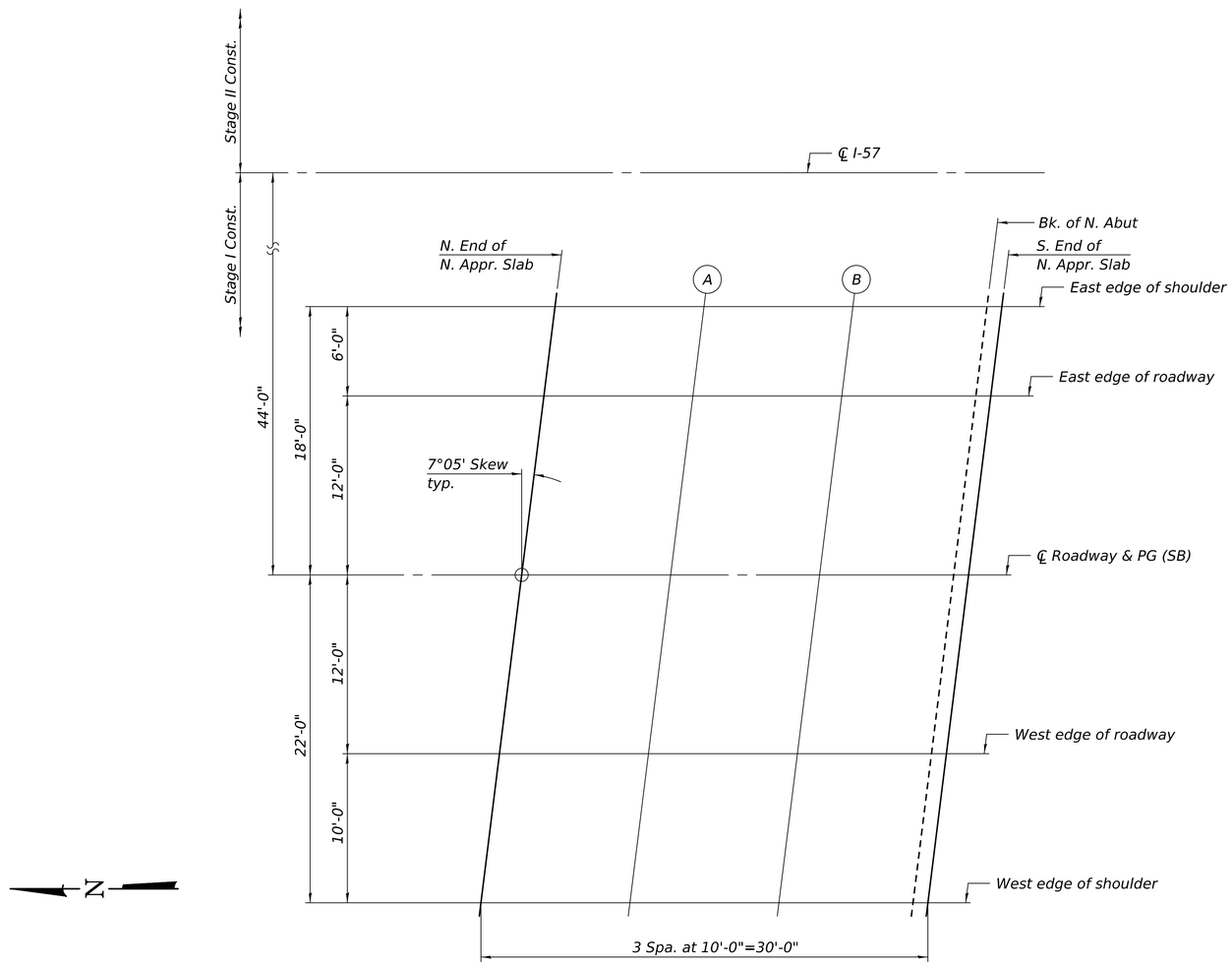

PLAN

WEST EDGE OF ROADWAY

Location	Station	Offset	Theoretical Grade Elevations	Theoretical Grade Elevations Adjusted For Grinding
N. End of N. Appr. Slab	455+10.92	12.00	648.12	648.14
A	455+20.92	12.00	648.10	648.12
B	455+30.92	12.00	648.07	648.09
S. End of N. Appr. Slab	455+40.92	12.00	648.04	648.06

WEST EDGE OF SHOULDER

Location	Station	Offset	Theoretical Grade Elevations	Theoretical Grade Elevations Adjusted For Grinding
N. End of N. Appr. Slab	455+09.68	22.00	647.92	647.94
A	455+19.68	22.00	647.90	647.92
B	455+29.68	22.00	647.87	647.89
S. End of N. Appr. Slab	455+39.68	22.00	647.85	647.87

EAST EDGE OF SHOULDER

Location	Station	Offset	Theoretical Grade Elevations	Theoretical Grade Elevations Adjusted For Grinding
N. End of S. Appr. Slab	456+55.89	-18.00	647.65	647.67
J	456+65.89	-18.00	647.64	647.66
K	456+75.89	-18.00	647.62	647.64
S. End of S. Appr. Slab	456+85.89	-18.00	647.61	647.63

EAST EDGE OF ROADWAY

Location	Station	Offset	Theoretical Grade Elevations	Theoretical Grade Elevations Adjusted For Grinding
N. End of S. Appr. Slab	456+55.14	-12.00	647.77	647.79
J	456+65.14	-12.00	647.76	647.78
K	456+75.14	-12.00	647.74	647.76
S. End of S. Appr. Slab	456+85.14	-12.00	647.73	647.75

℄ ROADWAY & PG (SB)

Location	Station	Offset	Theoretical Grade Elevations	Theoretical Grade Elevations Adjusted For Grinding
N. End of S. Appr. Slab	456+53.65	0.00	647.96	647.98
J	456+63.65	0.00	647.94	647.96
K	456+73.65	0.00	647.93	647.95
S. End of S. Appr. Slab	456+83.65	0.00	647.91	647.93

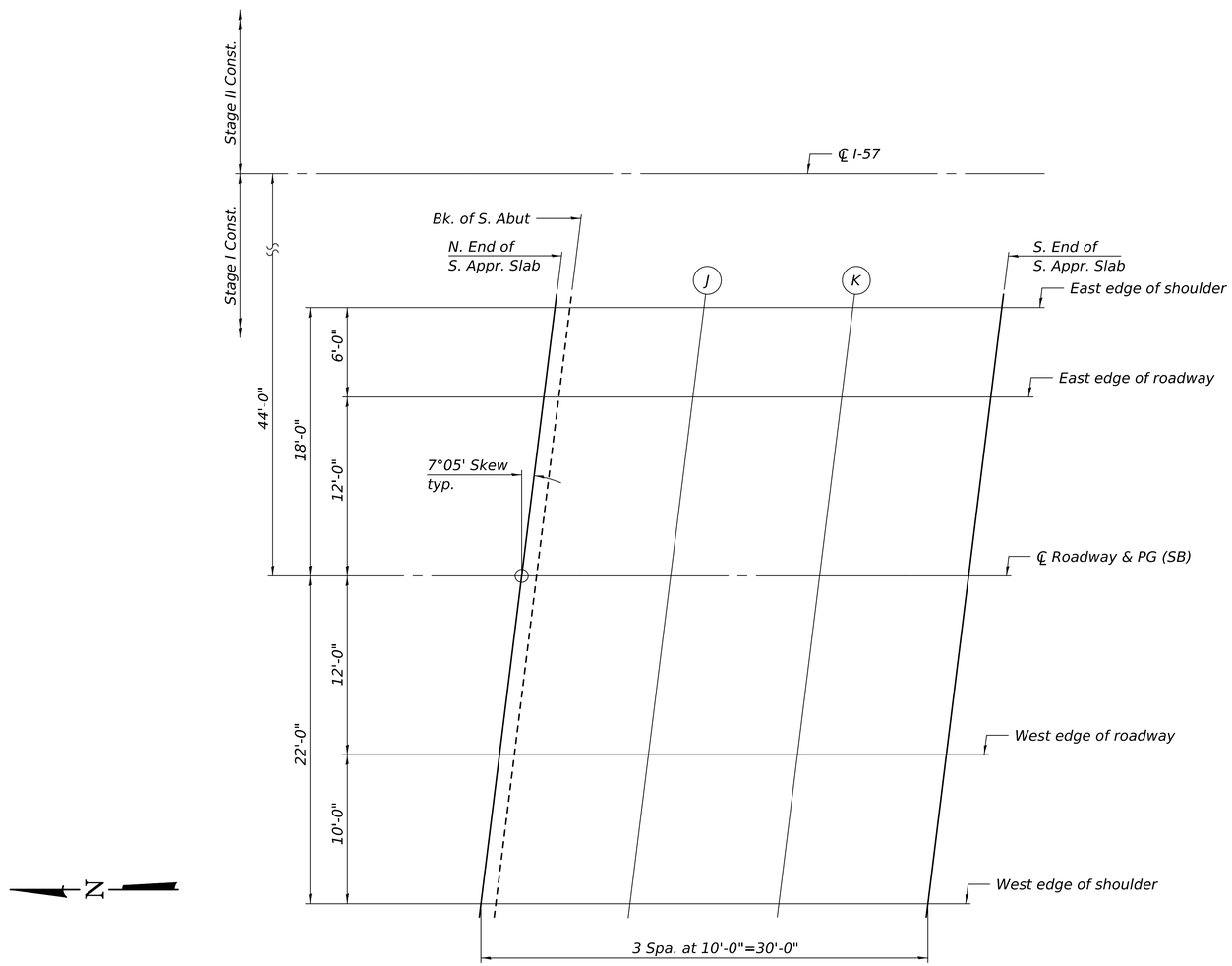

PLAN

WEST EDGE OF ROADWAY

Location	Station	Offset	Theoretical Grade Elevations	Theoretical Grade Elevations Adjusted For Grinding
N. End of S. Appr. Slab	456+52.16	12.00	647.78	647.80
J	456+62.16	12.00	647.76	647.78
K	456+72.16	12.00	647.75	647.77
S. End of S. Appr. Slab	456+82.16	12.00	647.74	647.76

WEST EDGE OF SHOULDER

Location	Station	Offset	Theoretical Grade Elevations	Theoretical Grade Elevations Adjusted For Grinding
N. End of S. Appr. Slab	456+50.92	22.00	647.58	647.60
J	456+60.92	22.00	647.56	647.58
K	456+70.92	22.00	647.55	647.57
S. End of S. Appr. Slab	456+80.92	22.00	647.54	647.56

MODEL: 0380009 0010-66M80-011
FILE NAME: pw://ildot-pw.bentley.com:PW\IDOT\Documents\IDOT Offices\Bureau of Bridges and Structures\OBM Projects\0380009\CADData\Structures\0380009-66M80.dgn

DESIGNED -	RYAN P. NEGANGARD	EXAMINED	ENGINEER OF BRIDGE DESIGN
CHECKED -	TIFFANY L. ADAMS		
DRAWN -	ANDRO R. SAMANIEGO	PASSED	ENGINEER OF BRIDGES AND STRUCTURES
CHECKED -	R.P.N. / T.L.A.		

DATE MAY 1, 2026
REVISED -
REVISED -

STATE OF ILLINOIS
DEPARTMENT OF TRANSPORTATION

TOP OF SOUTH APPROACH SLAB ELEVATIONS
STRUCTURE NO. 038-0010 (SB)

SHEET 11 OF 25 SHEETS

F.A.I. RTE.	SECTION	COUNTY	TOTAL SHEETS	SHEET NO.
57	(38-4B-2)BR	IROQUOIS	437	278

CONTRACT NO. 66M80

ILLINOIS | FED. AID PROJECT

5/1/2026 2:43:03 PM

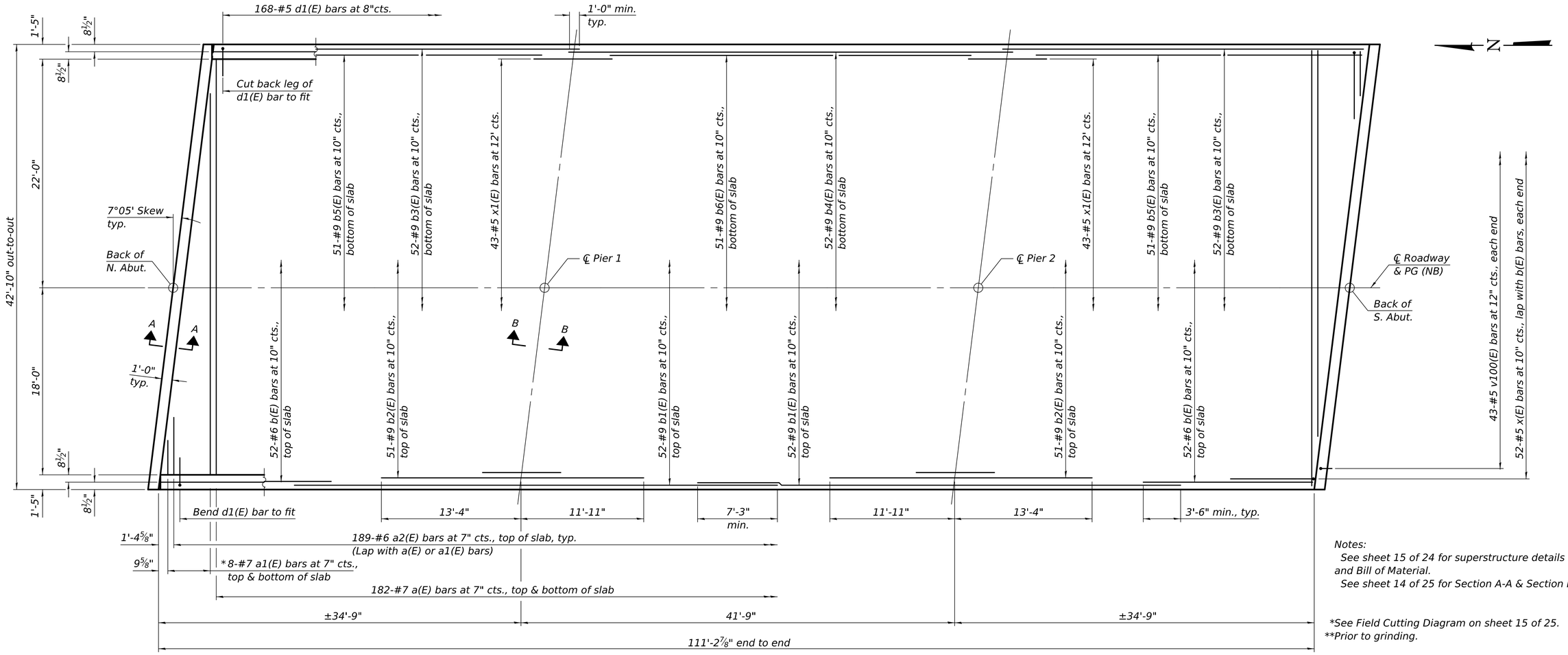

Notes:
See sheet 15 of 24 for superstructure details and Bill of Material.
See sheet 14 of 25 for Section A-A & Section B-B.

*See Field Cutting Diagram on sheet 15 of 25.
**Prior to grinding.

PLAN

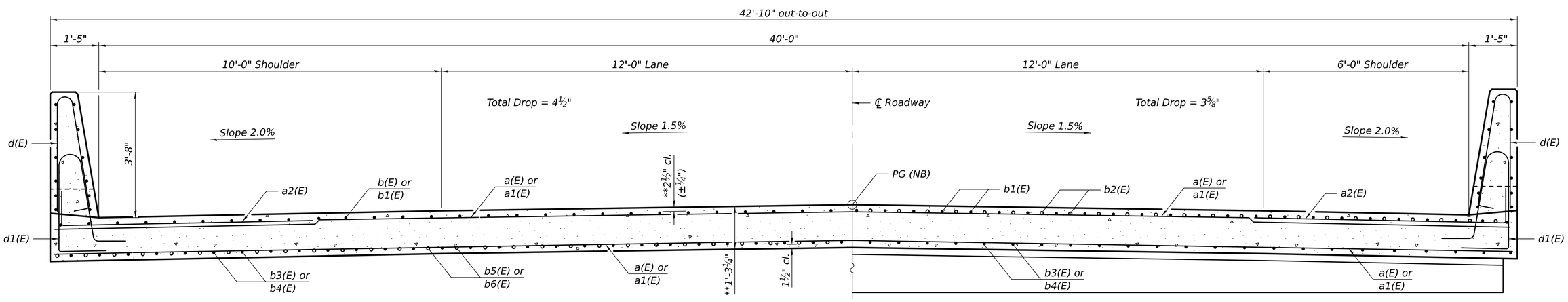

CROSS SECTION
(Looking South)

DESIGNED - RYAN P. NEGANGARD	EXAMINED	ENGINEER OF BRIDGE DESIGN	DATE MAY 1, 2026	STATE OF ILLINOIS DEPARTMENT OF TRANSPORTATION	SUPERSTRUCTURE STRUCTURE NO. 038-0009 (NB)
CHECKED - TIFFANY L. ADAMS					
DRAWN - ANDRO R. SAMANIEGO	PASSED	ENGINEER OF BRIDGES AND STRUCTURES	REVISED -		
CHECKED - R.P.N. / T.L.A.			REVISED -		SHEET 12 OF 25 SHEETS

F.A.I. RTE.	SECTION	COUNTY	TOTAL SHEETS	SHEET NO.
57	(38-4B-2)BR	IROQUOIS	437	279
		CONTRACT NO. 66M80		
		ILLINOIS	FED. AID PROJECT	

MODEL: 0380009 0010-66M80-012
FILE NAME: pw://ildot-pw.bentley.com:PWIDOT/Documents/IDOT Offices/Bureau of Bridges and Structures/OBM Projects/0380009/CADData/Structures/0380009-66M80.dgn
5/1/2026 2:43:04 PM

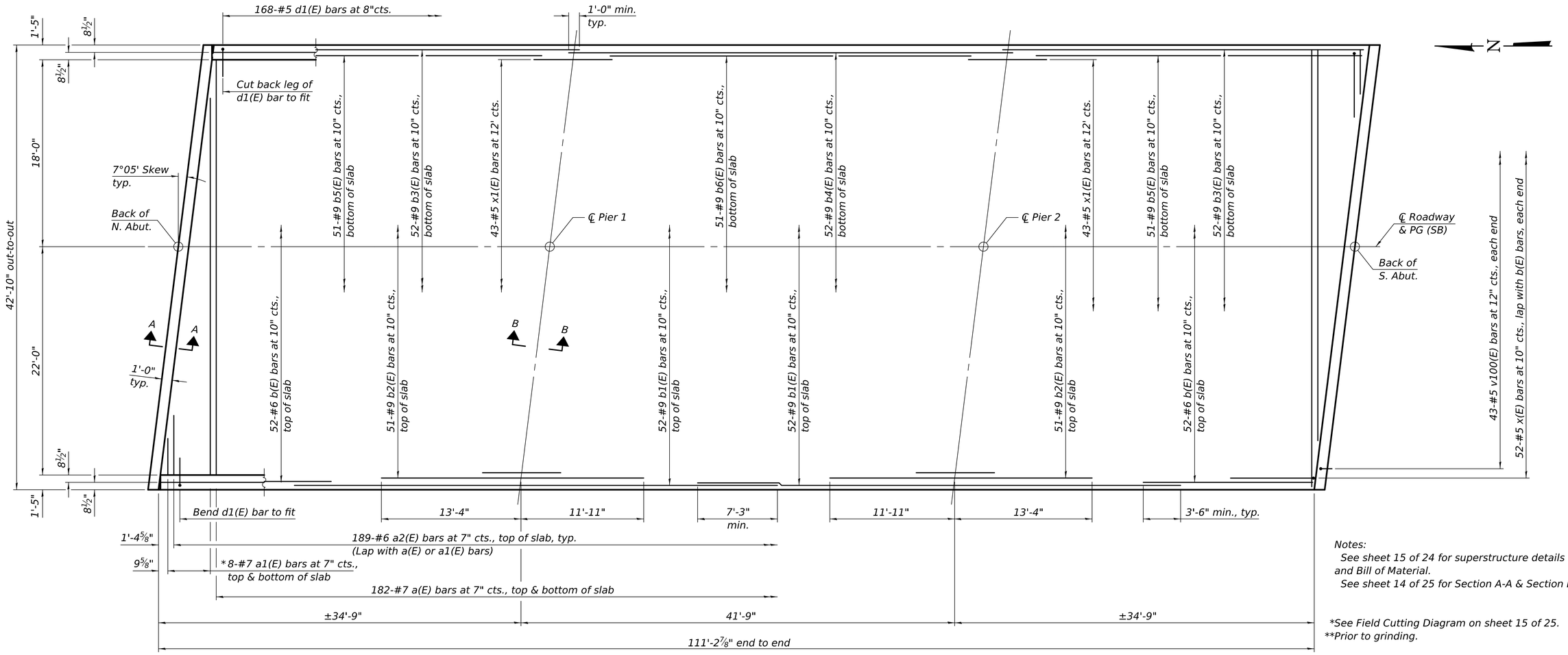

Notes:
See sheet 15 of 24 for superstructure details and Bill of Material.
See sheet 14 of 25 for Section A-A & Section B-B.

*See Field Cutting Diagram on sheet 15 of 25.
**Prior to grinding.

PLAN

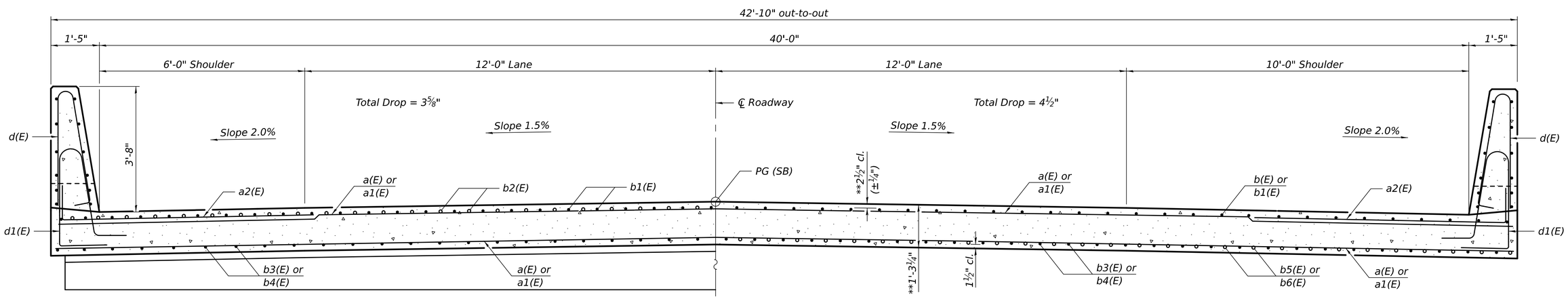

CROSS SECTION
(Looking South)

DESIGNED - RYAN P. NEGANGARD	EXAMINED	ENGINEER OF BRIDGE DESIGN	DATE	MAY 1, 2026	STATE OF ILLINOIS DEPARTMENT OF TRANSPORTATION	SUPERSTRUCTURE STRUCTURE NO. 038-0010 (SB)	F.A.I. RTE.	SECTION	COUNTY	TOTAL SHEETS	SHEET NO.
CHECKED - TIFFANY L. ADAMS							57	(38-4B-2)BR	IROQUOIS	437	280
DRAWN - ANDRO R. SAMANIEGO	PASSED	ENGINEER OF BRIDGES AND STRUCTURES	REVISED -						CONTRACT NO. 66M80		
CHECKED - R.P.N. / T.L.A.			REVISED -			SHEET 13 OF 25 SHEETS			ILLINOIS FED. AID PROJECT		

MODEL: 0380009 0010-66M80-013
FILE NAME: pw://ildot-pw.bentley.com:PWIDOT/Documents/IDOT Offices/Bureau of Bridges and Structures/OBM Projects/0380009/CADData/Structures/0380009-66M80.dgn
5/1/2026 2:43:05 PM

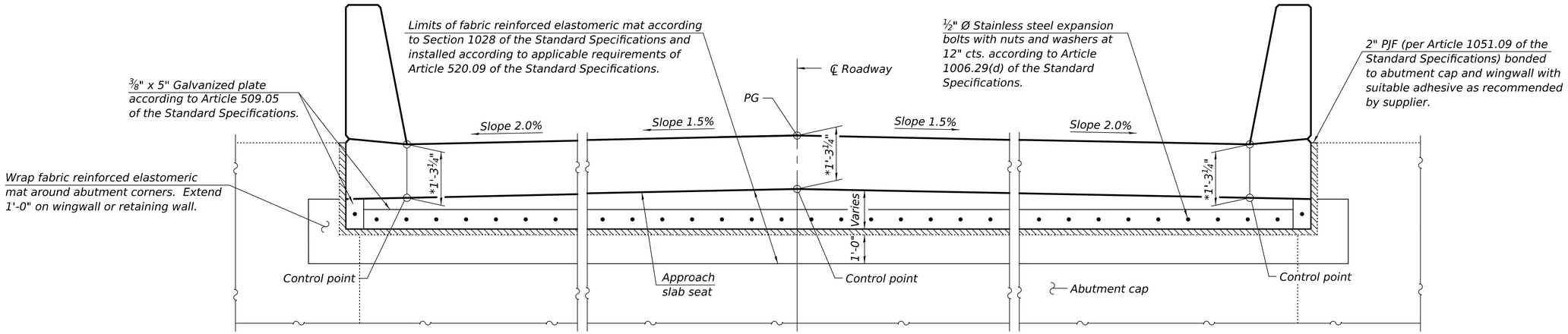

APPROACH SLAB SEAT

(Looking at back of abutment)

*Prior to grinding

Notes:
See sheet 15 of 25 for superstructure details and Bill of Material.
The approach slab seat shall have a constant slope determined from the control points shown.
Cost of fabric reinforced elastomeric mat, galvanized plate, stainless steel expansion bolts with nuts and washers and installation are included in the cost of Concrete Superstructure.

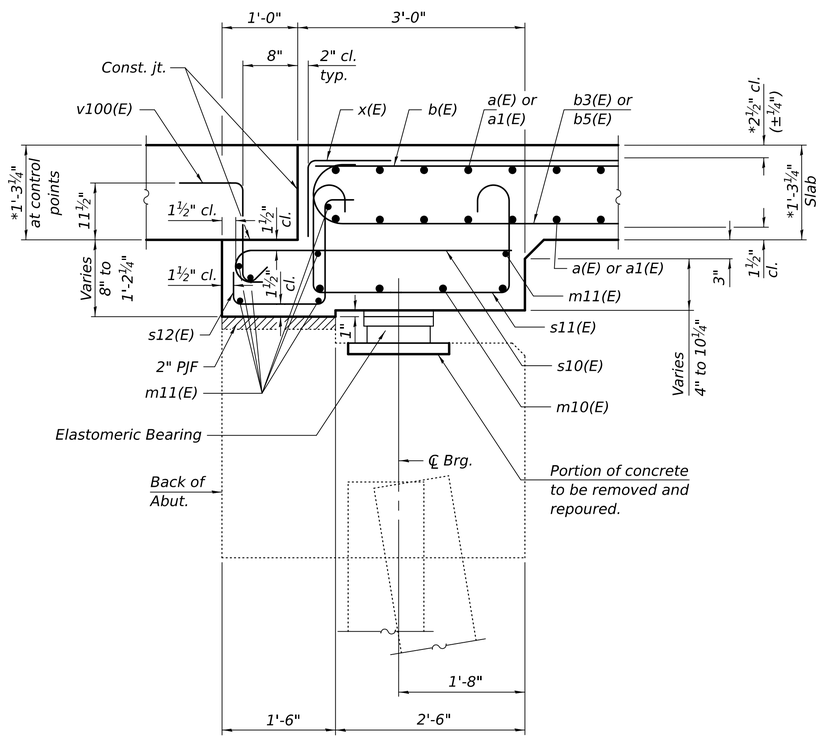

SECTION A-A

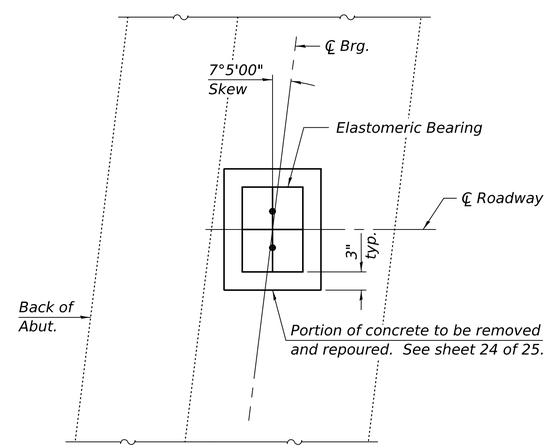

PLAN AT ABUTMENT

(Showing bottom of bearing)

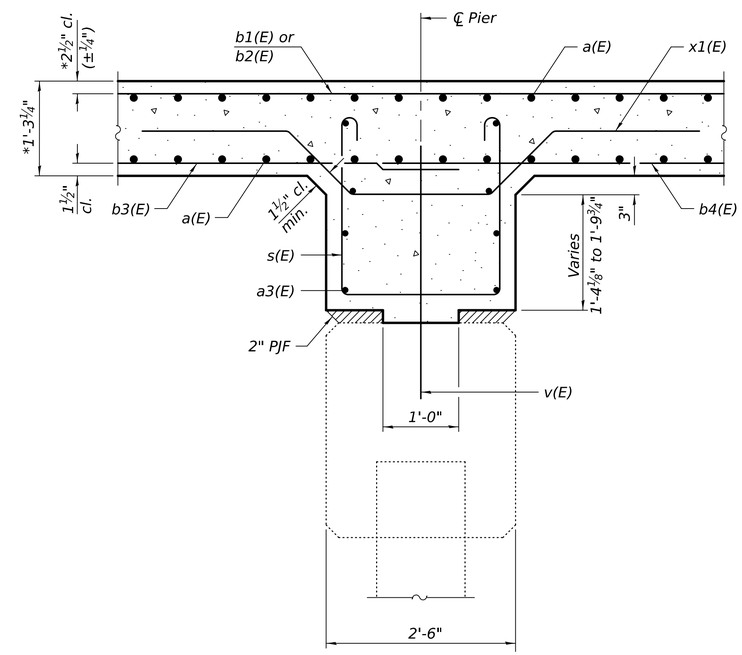

SECTION B-B

DESIGNED -	RYAN P. NEGANGARD	EXAMINED	ENGINEER OF BRIDGE DESIGN
CHECKED -	TIFFANY L. ADAMS		
DRAWN -	ANDRO R. SAMANIEGO	PASSED	ENGINEER OF BRIDGES AND STRUCTURES
CHECKED -	R.P.N. / T.L.A.		

DATE MAY 1, 2026
REVISED -
REVISED -

STATE OF ILLINOIS
DEPARTMENT OF TRANSPORTATION

SUPERSTRUCTURE DETAILS
STRUCTURE NO. 038-0009 (NB) & 038-0010 (SB)

SHEET 14 OF 25 SHEETS

F.A.I. RTE.	SECTION	COUNTY	TOTAL SHEETS	SHEET NO.
57	(38-4B-2)BR	IROQUOIS	437	281
		CONTRACT NO. 66M80		
		ILLINOIS	FED. AID PROJECT	

MODEL: 0380009 0010-66M80-014
FILE NAME: pw://ildot-pw.bentley.com:PWIDOT/Documents/IDOT Offices/Bureau of Bridges and Structures/OBM Projects/0380009/CADData/Structures/0380009-66M80.dgn
5/1/2026 2:43:07 PM

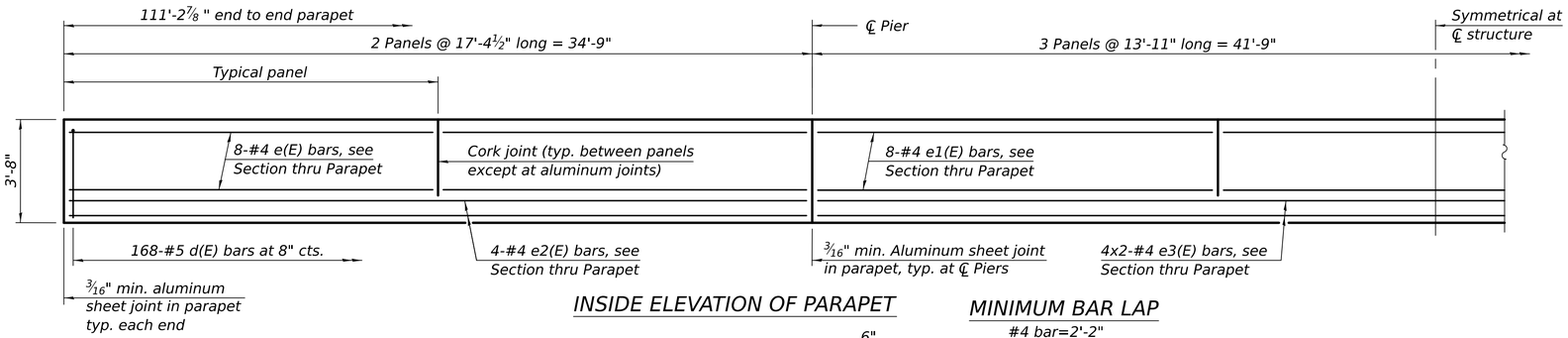

INSIDE ELEVATION OF PARAPET

MINIMUM BAR LAP

#4 bar=2'-2"

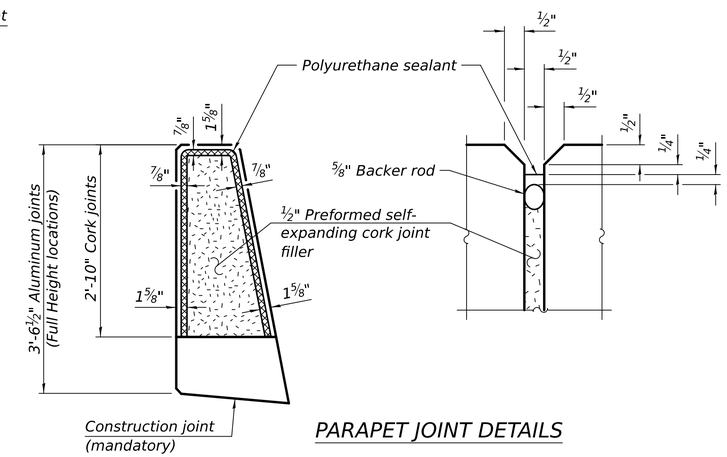

PARAPET JOINT DETAILS

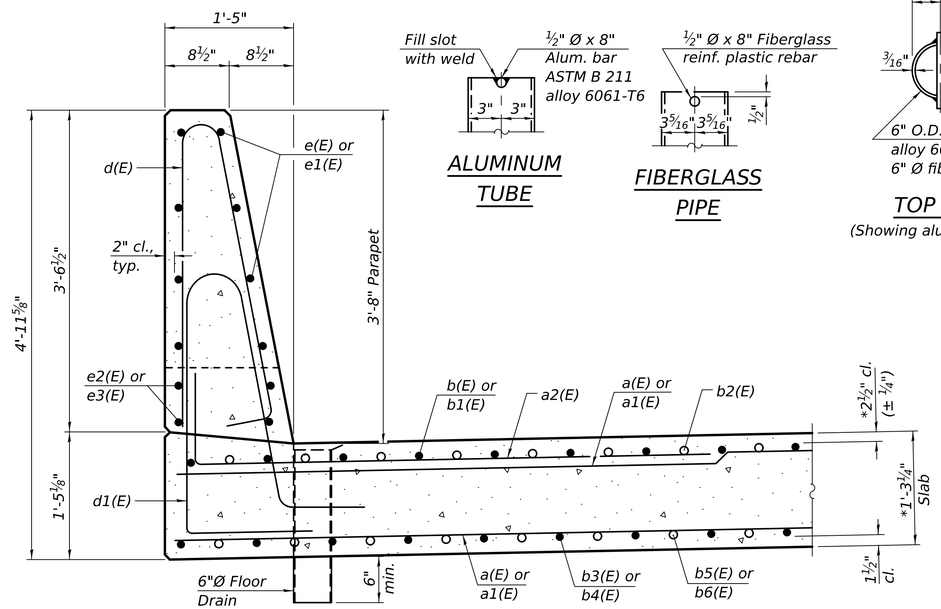

*Prior to grinding

SECTION THRU PARAPET

ALUMINUM TUBE

FIBERGLASS PIPE

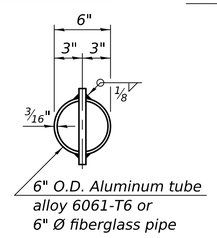

TOP PLAN

(Showing aluminum tube)

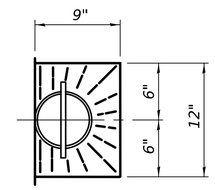

TOP PLAN

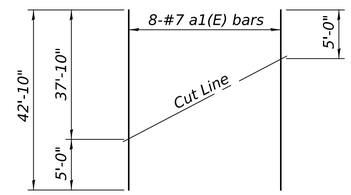

FIELD CUTTING DIAGRAM

Order a1(E) bars full length. Cut as shown and use the remainder of bars in opposite end of deck.

Notes:

The Polyurethane Sealant shall be according to Article 1050.04 of the Std. Spec. and the color shall be gray.

Fiberglass pipe shall conform to ASTM D2996, with short-time rupture strength hoop tensile stress of 30,000 p.s.i. minimum.

The exterior surfaces of the fiberglass floor drains shall be pigmented by the manufacturer with a color that matches the concrete.

The top portion of aluminum floor drains shall be coated with 5 mils of either bitumen paint or epoxy paint to minimize reaction with wet concrete.

The 3/16" minimum aluminum sheet shall be ASTM B 209 alloy 3003-H14 and coated with 5 mils of either bitumen paint or epoxy paint to minimize reaction with wet concrete. Cost included with Concrete Superstructure.

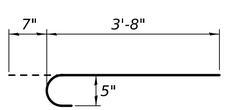

BAR s10(E)

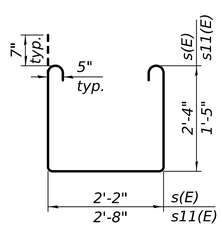

BAR s(E) & s11(E)

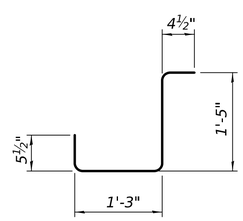

BAR s12(E)

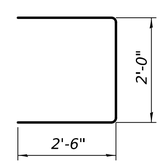

BAR u(E)

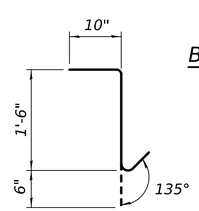

BAR v100(E)

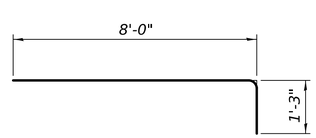

BAR x(E)

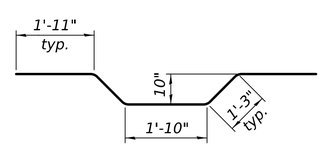

BAR x1(E)

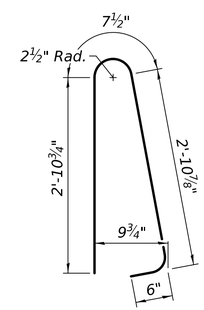

BAR d(E)

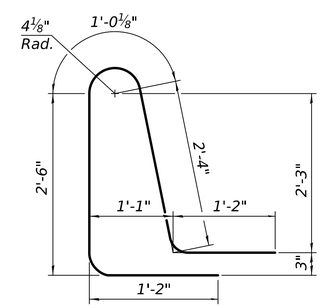

BAR d1(E)

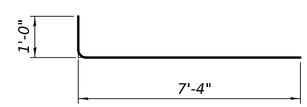

BAR a2(E)

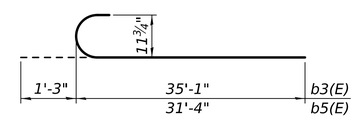

BAR b3(E) & b5(E)

TWO SUPERSTRUCTURES BILL OF MATERIAL

Bar	No.	Size	Length	Shape
a(E)	728	#7	42'-6"	
a1(E)	32	#7	42'-10"	
a2(E)	756	#6	8'-4"	
a3(E)	32	#5	42'-0"	
b(E)	208	#6	16'-2"	
b1(E)	208	#9	46'-6"	
b2(E)	204	#9	25'-3"	
b3(E)	208	#9	36'-4"	
b4(E)	104	#9	42'-9"	
b5(E)	204	#9	32'-7"	
b6(E)	102	#9	34'-9"	
d(E)	672	#5	7'-0"	
d1(E)	672	#5	8'-3"	
e(E)	128	#4	17'-1"	
e1(E)	96	#4	13'-7"	
e2(E)	32	#4	34'-5"	
e3(E)	32	#4	21'-10"	
m10(E)	16	#6	42'-10"	
m11(E)	56	#4	22'-5"	
s(E)	172	#5	8'-0"	
s10(E)	412	#5	4'-3"	
s11(E)	176	#5	6'-8"	
s12(E)	412	#4	3'-6"	
u(E)	16	#5	7'-0"	
v(E)	172	#5	3'-4"	
v100(E)	172	#5	2'-10"	
x(E)	208	#5	9'-3"	
x1(E)	172	#5	8'-2"	
Reinforcement Bars, Epoxy Coated			Pound	234,050
Concrete Superstructure			Cu. Yd.	566.9

Bars indicated thus 1 x 2-#4 etc. indicates 1 line of bars with 2 lengths per line.

MODEL: 0380009 0010-66M80-015
FILE NAME: pw://ildot-pw.bentley.com:PWIDOT/Documents/IDOT Offices/Bureau of Bridges and Structures/OBM Projects/0380009/CADData/Structures/0380009-66M80.dgn

DESIGNED - RYAN P. NEGANGARD	EXAMINED	ENGINEER OF BRIDGE DESIGN	DATE MAY 1, 2026
CHECKED - TIFFANY L. ADAMS			
DRAWN - ANDRO R. SAMANIEGO	PASSED	ENGINEER OF BRIDGES AND STRUCTURES	REVISED -
CHECKED - R.P.N. / T.L.A.			REVISED -

STATE OF ILLINOIS
DEPARTMENT OF TRANSPORTATION

SUPERSTRUCTURE DETAILS
STRUCTURE NO. 038-0009 (NB) & 038-0010 (SB)

SHEET 15 OF 25 SHEETS

F.A.I. RTE.	SECTION	COUNTY	TOTAL SHEETS	SHEET NO.
57	(38-4B-2)BR	IROQUOIS	437	282
		CONTRACT NO. 66M80		
		ILLINOIS	FED. AID PROJECT	

5/1/2026 2:43:07 PM

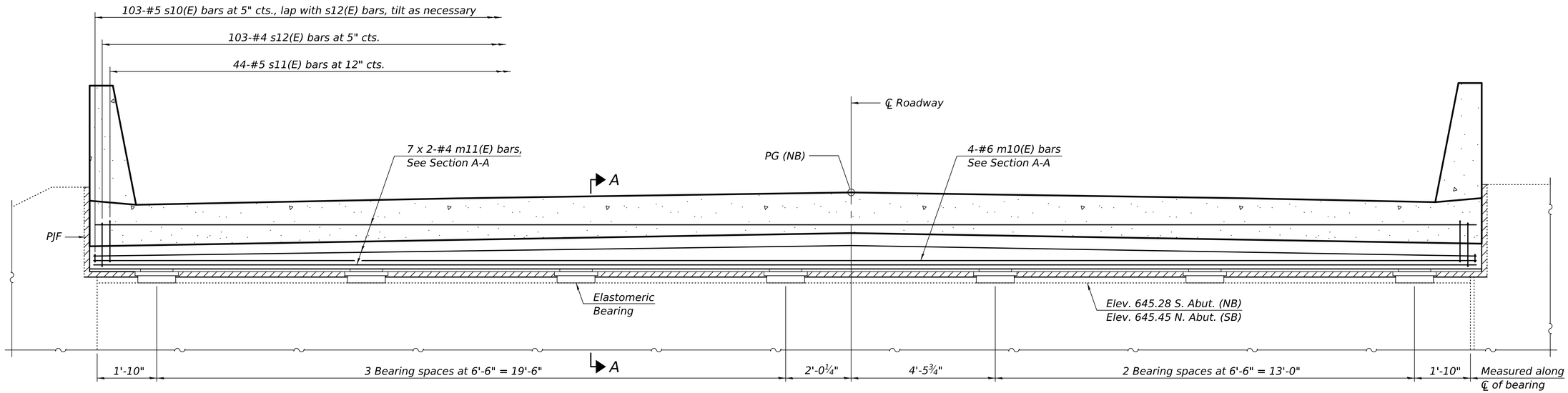

DIAPHRAGM AT SOUTH ABUTMENT (NB)

(South Abutment NB looking South; North Abutment SB similar)

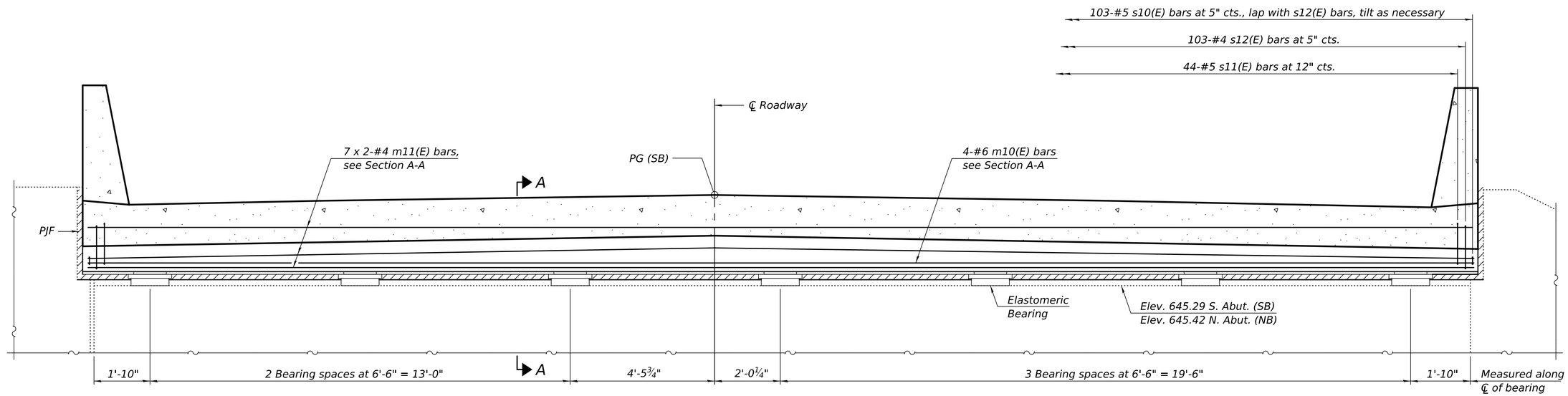

DIAPHRAGM AT SOUTH ABUTMENT (SB)

(South Abutment SB looking South; North Abutment NB similar)

MINIMUM BAR LAP

#4 bar = 2'-0"

Notes:
- See sheet 15 of 25 for superstructure details and Bill of Material.
- See sheet 14 of 25 for Section A-A.
- The s10(E), s11(E) and s12(E) bars shall be placed parallel to the ℄ roadway. Spacing for these bars shall be at right angles to the ℄ roadway.
- See sheet 14 of 25 for PJF details.

MODEL: 0380009 0010-66M80-016
FILE NAME: pw://ildot-pw.bentley.com:PW\IDOT\Documents\IDOT Offices\Bureau of Bridges and Structures\OBM Projects\0380009\CADData\Structures\0380009-66M80.dgn

DESIGNED -	RYAN P. NEGANGARD	EXAMINED	ENGINEER OF BRIDGE DESIGN
CHECKED -	TIFFANY L. ADAMS		
DRAWN -	ANDRO R. SAMANIEGO	PASSED	ENGINEER OF BRIDGES AND STRUCTURES
CHECKED -	R.P.N. / T.L.A.		

DATE MAY 1, 2026
REVISED -
REVISED -

5/1/2026 2:43:08 PM

STATE OF ILLINOIS
DEPARTMENT OF TRANSPORTATION

DIAPHRAGM DETAILS
STRUCTURE NO. 038-0009 (NB) & 038-0010 (SB)

SHEET 16 OF 25 SHEETS

F.A.I. RTE.	SECTION	COUNTY	TOTAL SHEETS	SHEET NO.
57	(38-4B-2)BR	IROQUOIS	437	283

CONTRACT NO. 66M80

ILLINOIS | FED. AID PROJECT

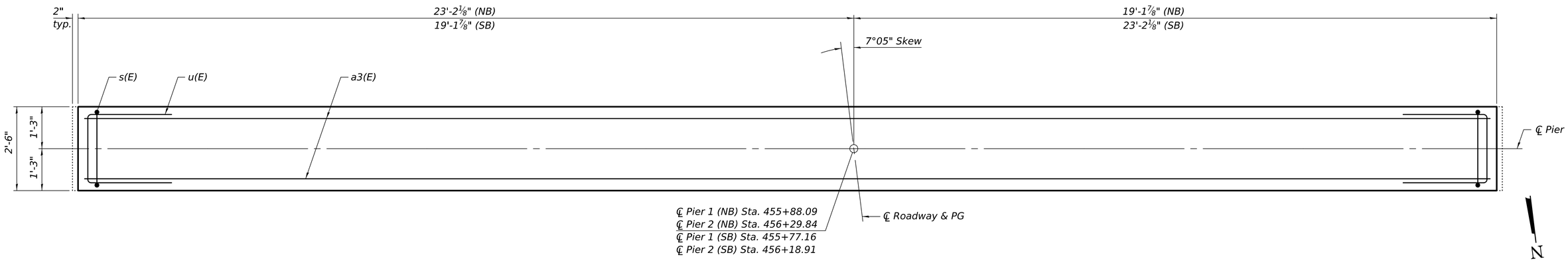

PLAN

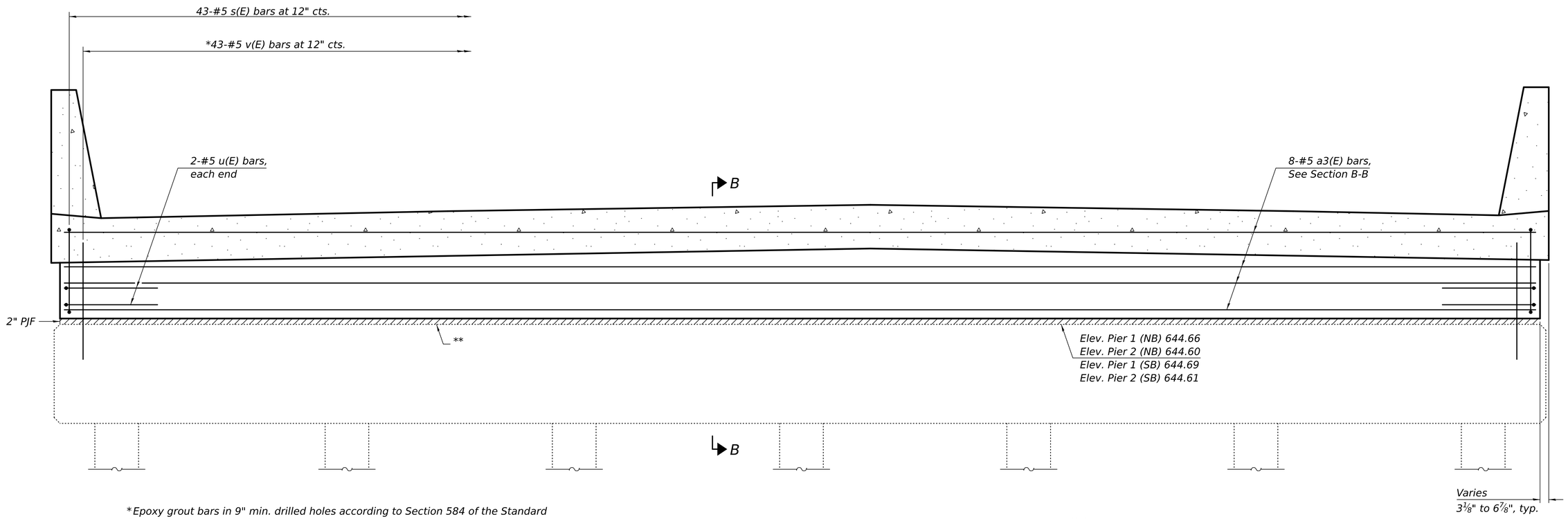

*Epoxy grout bars in 9" min. drilled holes according to Section 584 of the Standard Specifications. Cost included with the Reinforement Bars, Epoxy Coated, typ.

**Burn, grind smooth, and epoxy seal existing anchor bolts flush with proposed concrete surfaces. Cost included with Removal of Existing Superstructure.

ELEVATION

(NB Piers shown looking South, SB Piers similar)

Notes:

See sheet 15 of 25 for additional superstructure details and Bill of Material.

See sheet 14 of 25 for Section B-B.

MODEL: 0380009 0010-66M80-017
FILE NAME: pw://ildot-pw.bentley.com:PWIDOT/Documents/IDOT Offices/Bureau of Bridges and Structures/OBM Projects/0380009/CADData/Structures/0380009-66M80.dgn

DESIGNED - RYAN P. NEGANGARD	EXAMINED	ENGINEER OF BRIDGE DESIGN	DATE	MAY 1, 2026	STATE OF ILLINOIS DEPARTMENT OF TRANSPORTATION
CHECKED - TIFFANY L. ADAMS					
DRAWN - ANDRO R. SAMANIEGO	PASSED	ENGINEER OF BRIDGES AND STRUCTURES	REVISED -		
CHECKED - R.P.N. / T.L.A.			REVISED -		

PIER EXTENSIONS
STRUCTURE NO. 038-0009 (NB) & 038-0010 (SB)

SHEET 17 OF 25 SHEETS

F.A.I. RTE.	SECTION	COUNTY	TOTAL SHEETS	SHEET NO.
57	(38-4B-2)BR	IROQUOIS	437	284
		CONTRACT NO. 66M80		
	ILLINOIS	FED. AID PROJECT		

5/1/2026 2:43:09 PM

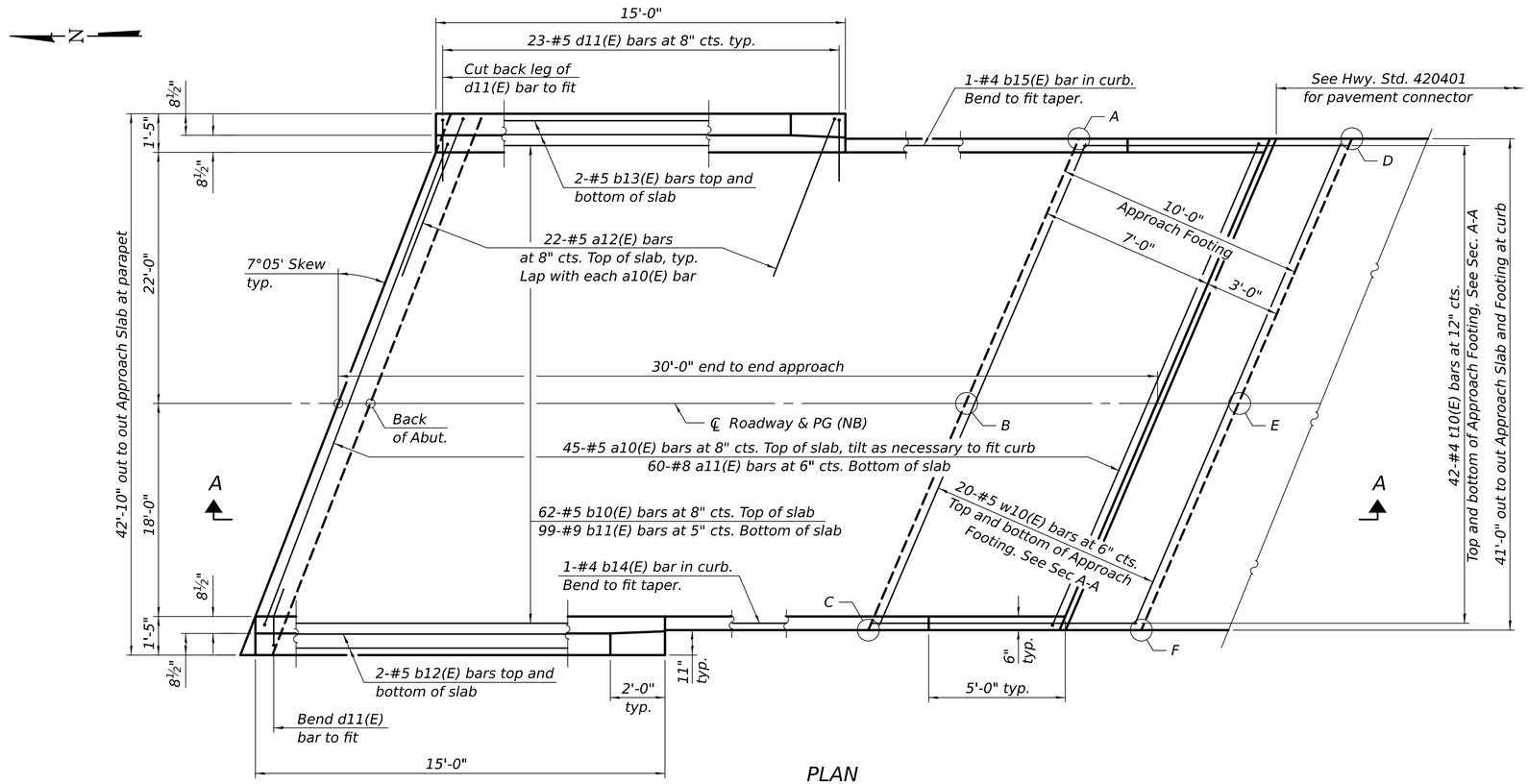

PLAN

(South approach slab shown; North approach slab similar by 180° rotation)

TOP AND BOTTOM ELEVATIONS FOR APPROACH FOOTING

North Approach			South Approach		
Point/ Location	Top	Bottom	Point/ Location	Top	Bottom
A - SW	646.60	645.77	A - NE	646.43	645.60
B - S ℄	646.91	646.08	B - N ℄	646.82	645.99
C - SE	646.51	645.68	C - NW	646.51	645.68
D - NW	646.61	645.78	D - SE	646.43	645.60
E - N ℄	646.91	646.08	E - S ℄	646.82	645.99
F - NE	646.52	645.69	F - SW	646.51	645.68

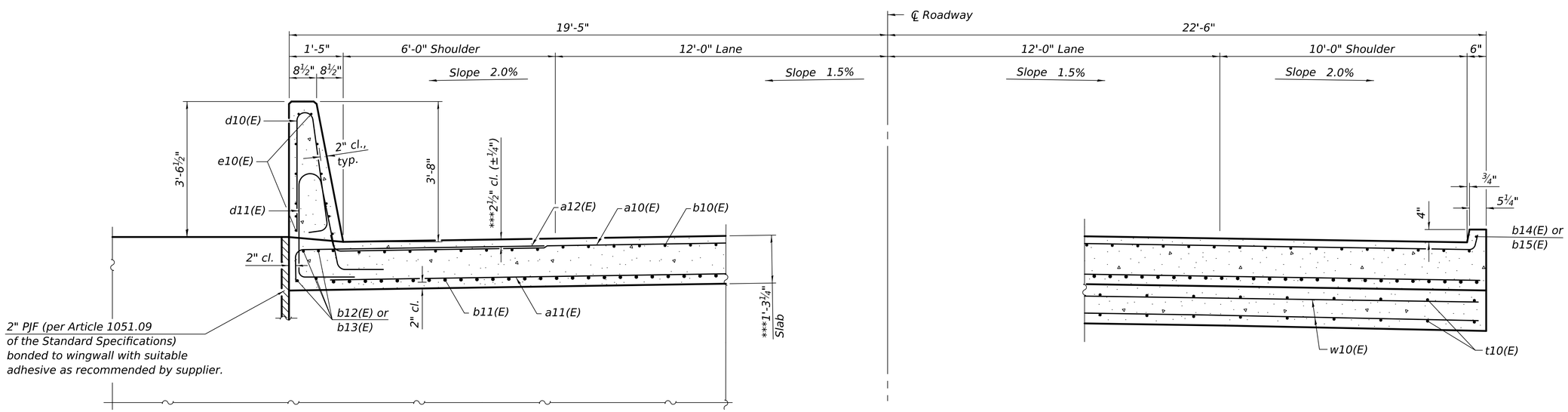

NEAR ABUTMENT

CROSS SECTION

(Looking North)

AT APPROACH FOOTING

(Sheet 1 of 3)

MODEL: 0380009 00 10-66M80-018
FILE NAME: pw://ildot-pw.bentley.com:PWIDOT/Documents/IDOT Offices/Bureau of Bridges and Structures/OBM Projects/0380009/CADData/Structures/0380009-66M80.dgn
5/1/2026 2:43:10 PM

DESIGNED - RYAN P. NEGANGARD	EXAMINED	DATE MAY 1, 2026	STATE OF ILLINOIS DEPARTMENT OF TRANSPORTATION
CHECKED - TIFFANY L. ADAMS	ENGINEER OF BRIDGE DESIGN		
DRAWN - ANDRO R. SAMANIEGO	PASSED	REVISED -	
CHECKED - R.P.N. / T.L.A.	ENGINEER OF BRIDGES AND STRUCTURES	REVISED -	

BRIDGE APPROACH SLAB
STRUCTURE NO. 038-0009 (NB)

SHEET 18 OF 25 SHEETS

F.A.I. RTE.	SECTION	COUNTY	TOTAL SHEETS	SHEET NO.
57	(38-4B-2)BR	IROQUOIS	437	285
		CONTRACT NO. 66M80		
		ILLINOIS	FED. AID PROJECT	

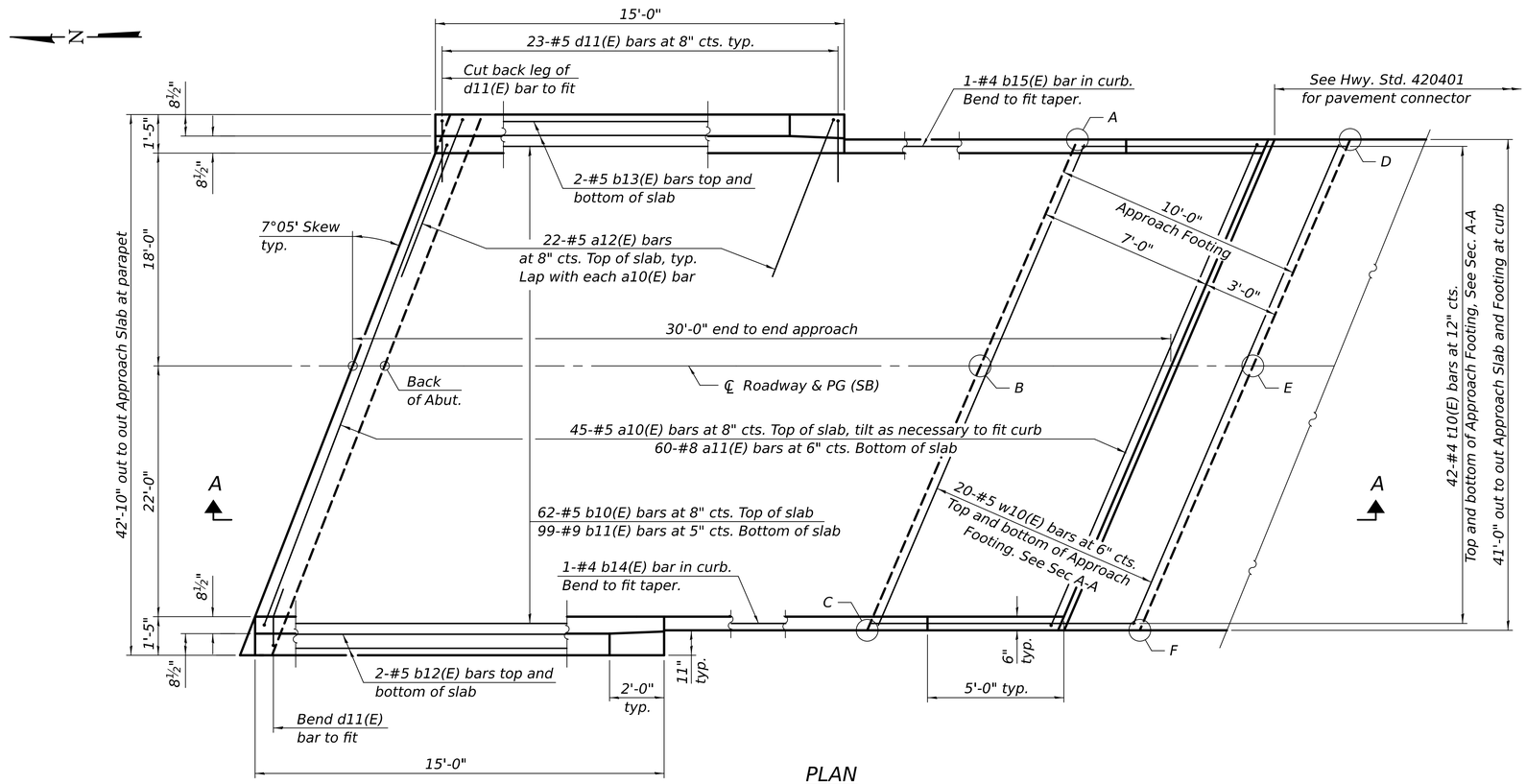

PLAN

(South approach slab shown; North approach slab similar by 180° rotation)

TOP AND BOTTOM ELEVATIONS FOR APPROACH FOOTING

North Approach			South Approach		
Point/ Location	Top	Bottom	Point/ Location	Top	Bottom
A - SW	646.65	645.82	A - NE	646.36	645.53
B - S ℄	647.03	646.20	B - N ℄	646.67	645.84
C - SE	646.71	645.88	C - NW	646.29	645.46
D - NW	646.67	645.84	D - SE	646.35	645.52
E - N ℄	647.06	646.23	E - S ℄	646.66	645.83
F - NE	646.74	645.91	F - SW	646.27	645.44

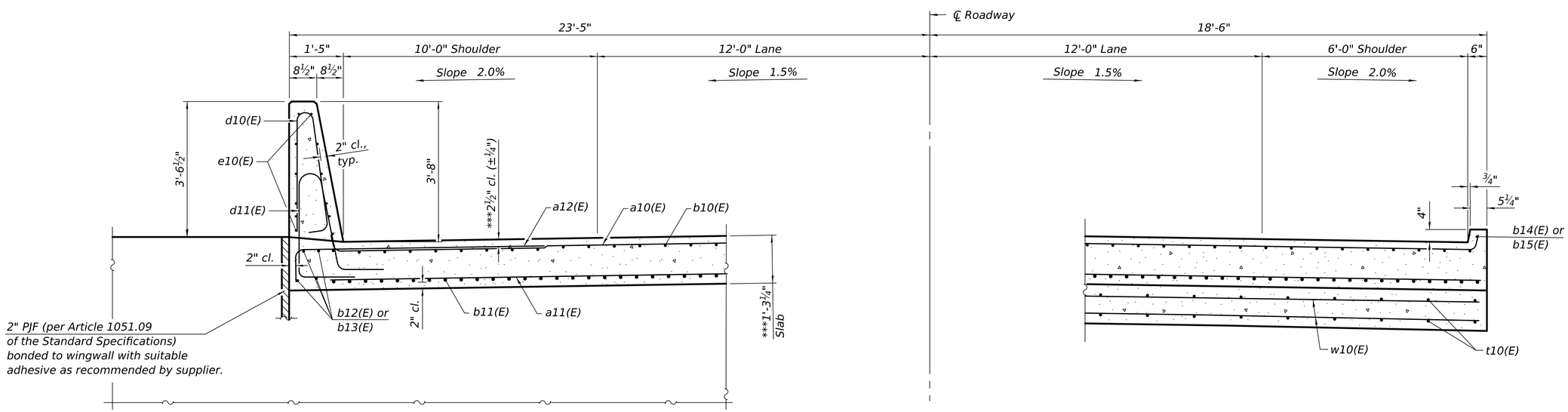

NEAR ABUTMENT

CROSS SECTION

(Looking North)

AT APPROACH FOOTING

(Sheet 2 of 3)

MODEL: 0380009 00 10-66M80-019
FILE NAME: pw://ildot-pw.bentley.com:PWIDOT/Documents/IDOT Offices/Bureau of Bridges and Structures/OBM Projects/0380009/CADData/Structures/0380009-66M80.dgn
5/1/2026 2:43:11 PM

DESIGNED -	RYAN P. NEGANGARD	EXAMINED	ENGINEER OF BRIDGE DESIGN
CHECKED -	TIFFANY L. ADAMS		
DRAWN -	ANDRO R. SAMANIEGO	PASSED	ENGINEER OF BRIDGES AND STRUCTURES
CHECKED -	R.P.N. / T.L.A.		

DATE MAY 1, 2026
REVISED -
REVISED -

STATE OF ILLINOIS
DEPARTMENT OF TRANSPORTATION

BRIDGE APPROACH SLAB
STRUCTURE NO. 038-0010 (SB)

SHEET 19 OF 25 SHEETS

F.A.I. RTE.	SECTION	COUNTY	TOTAL SHEETS	SHEET NO.
57	(38-4B-2)BR	IROQUOIS	437	286
		CONTRACT NO. 66M80		
		ILLINOIS	FED. AID PROJECT	

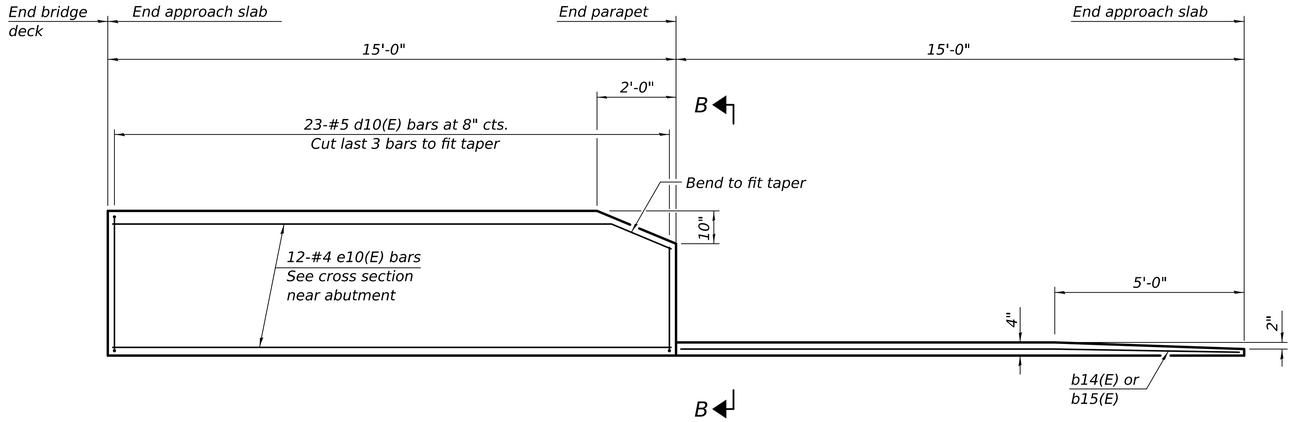

INSIDE ELEVATION OF PARAPET AND CURB

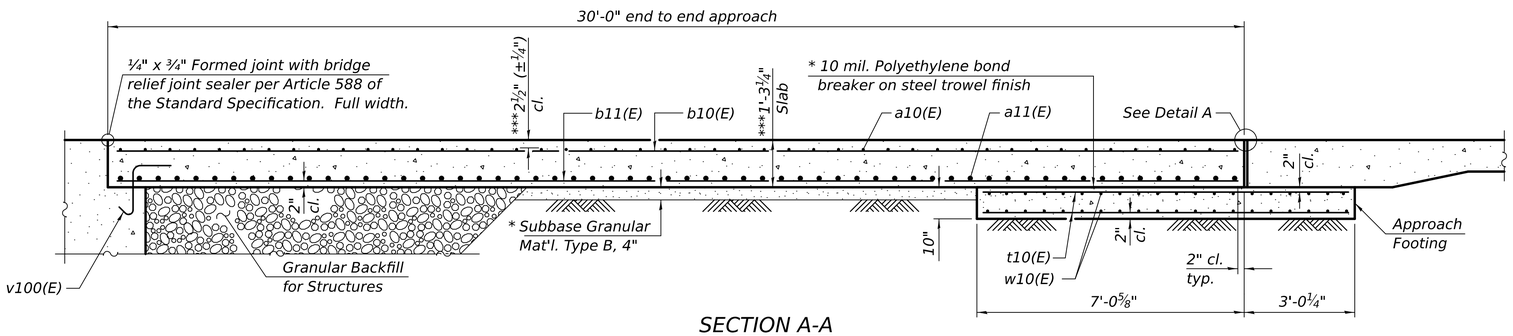

SECTION A-A

Notes:

The joint opening shall be adjusted for temperature per Article 520.04 of the Standard Specifications. However, since this detail is for jointless structures, the length of bridge used to calculate the adjustment shall be equal to half the total bridge length plus the length of the bridge approach slab.

Parapet concrete shall be paid for as Concrete Superstructure.

Approach slab shall be paid for as Concrete Superstructure (Approach Slab).

Approach footing concrete shall be paid for as Concrete Structures.

The approach footing maximum applied service bearing pressure (Qmax) = 2.0 ksf.

Cost of excavation for approach footing included with Concrete Structures.

For Granular Backfill for Structures and drainage treatment details, see sheet 2 of 25.

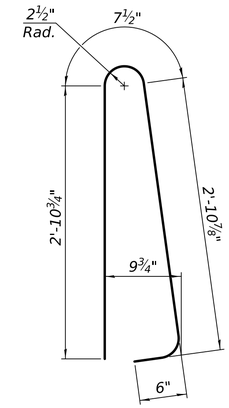

BAR d10(E)

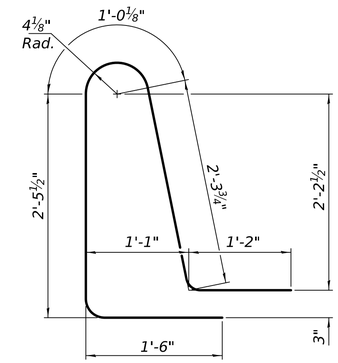

BAR d11(E)

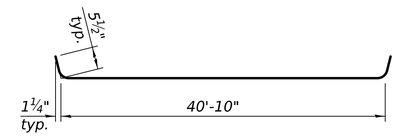

BAR a10(E)

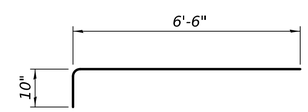

BAR a12(E)

FOUR APPROACHES
BILL OF MATERIAL

Bar	No.	Size	Length	Shape
a10(E)	180	#5	41'-9"	
a11(E)	240	#8	41'-0"	
a12(E)	176	#5	7'-4"	
b10(E)	248	#5	29'-8"	
b11(E)	396	#9	29'-8"	
b12(E)	16	#5	14'-10"	
b13(E)	16	#5	14'-7"	
b14(E)	4	#4	14'-8"	
b15(E)	4	#4	14'-9"	
d10(E)	184	#5	7'-0"	
d11(E)	184	#5	8'-6"	
e10(E)	96	#4	14'-8"	
t10(E)	336	#4	9'-9"	
w10(E)	160	#5	41'-0"	
Concrete Superstructure			Cu. Yd.	16.9
Concrete Superstructure (Approach Slab)			Cu. Yd.	240.1
Concrete Structures			Cu. Yd.	51.0
Reinforcement Bars, Epoxy Coated			Pound	96,590

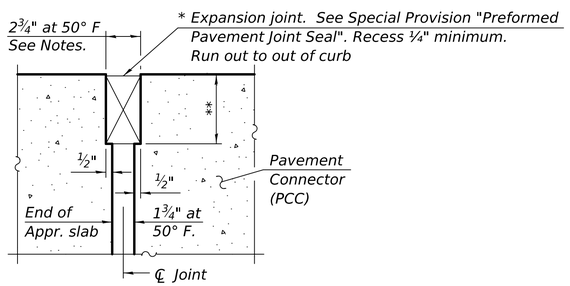

DETAIL A
(at Rt. ∠'s)

* Cost included with Concrete Superstructure (Approach Slab).

** Per manufacturer recommendations

*** Prior to grinding.

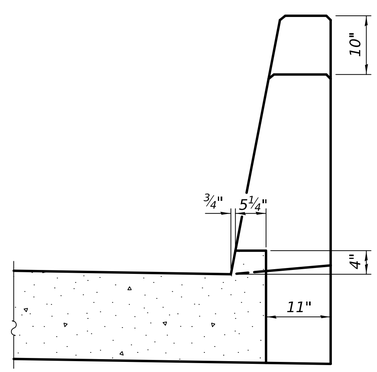

VIEW B-B

(Sheet 3 of 3)

DESIGNED - RYAN P. NEGANGARD	EXAMINED	DATE	MAY 1, 2026
CHECKED - TIFFANY L. ADAMS	ENGINEER OF BRIDGE DESIGN		
DRAWN - ANDRO R. SAMANIEGO	PASSED	REVISED -	
CHECKED - R.P.N. / T.L.A.	ENGINEER OF BRIDGES AND STRUCTURES	REVISED -	

STATE OF ILLINOIS
DEPARTMENT OF TRANSPORTATION

BRIDGE APPROACH SLAB DETAILS
STRUCTURE NO. 038-0009 (NB) & 038-0010 (SB)

SHEET 20 OF 25 SHEETS

F.A.I. RTE.	SECTION	COUNTY	TOTAL SHEETS	SHEET NO.
57	(38-4B-2)BR	IROQUOIS	437	287
		CONTRACT NO. 66M80		
		ILLINOIS	FED. AID PROJECT	

MODEL: 0380009 0010-66M80-020
FILE NAME: pw://ildot-pw.bentley.com:PWIDOT/Documents/IDOT Offices/Bureau of Bridges and Structures/OBM Projects/0380009/CADData/Structures/0380009-66M80.dgn

5/1/2026 2:43:11 PM

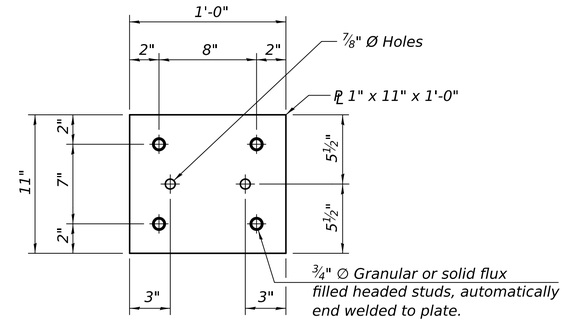

CONNECTION PLATE

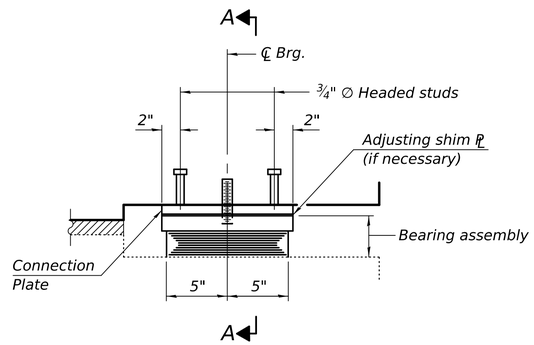

ELEVATION AT ABUT.

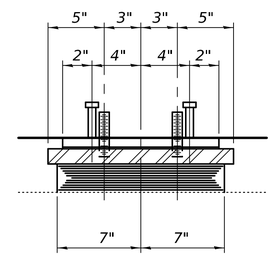

SECTION A-A

TYPE I ELASTOMERIC EXP. BRG.

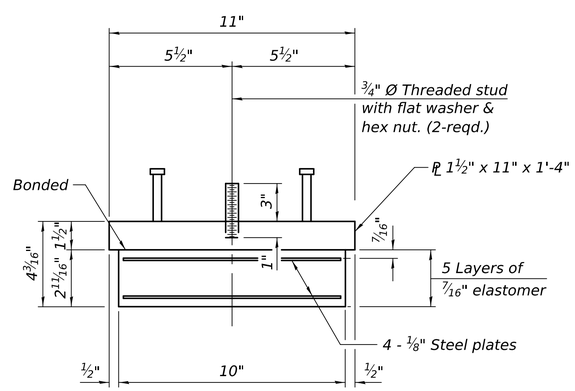

BEARING ASSEMBLY

Note:
Shim plates shall not be placed under bearing assembly.

Notes:
Headed studs and connection plates shall be included in the cost of Elastomeric Bearing Assembly, Type I.
The connection plates and structural steel plates of the Bearing Assembly shall conform to the requirements of AASHTO M270 Grade 50.
Two 1/8 in. adjusting shims shall be provided for each bearing in addition to all other plates or shims and placed as shown on bearing details.
All bearing plates, connection plates, shim plates, nuts, and washers shall be galvanized according to AASHTO M111 or M232 as applicable.

BILL OF MATERIAL

Item	Unit	Total
Elastomeric Bearing Assembly, Type I	Each	28

MODEL: 0380009 0016-66M80-021
FILE NAME: pw://ildot-pw.bentley.com:PWIDOT/Documents/IDOT Offices/Bureau of Bridges and Structures/OBM Projects/0380009/CADData/Structures/0380009-66M80.dgn

DESIGNED - RYAN P. NEGANGARD	EXAMINED	DATE MAY 1, 2026	
CHECKED - TIFFANY L. ADAMS	ENGINEER OF BRIDGE DESIGN		
DRAWN - ANDRO R. SAMANIEGO	PASSED	REVISED -	
CHECKED - R.P.N. / T.L.A.	ENGINEER OF BRIDGES AND STRUCTURES	REVISED -	

STATE OF ILLINOIS
DEPARTMENT OF TRANSPORTATION

BEARING DETAILS
STRUCTURE NO. 038-0009 (NB) & 038-0010 (SB)

SHEET 21 OF 25 SHEETS

F.A.I. RTE.	SECTION	COUNTY	TOTAL SHEETS	SHEET NO.
57	(38-4B-2)BR	IROQUOIS	437	288
		CONTRACT NO. 66M80		
	ILLINOIS	FED. AID PROJECT		

5/1/2026 2:43:12 PM

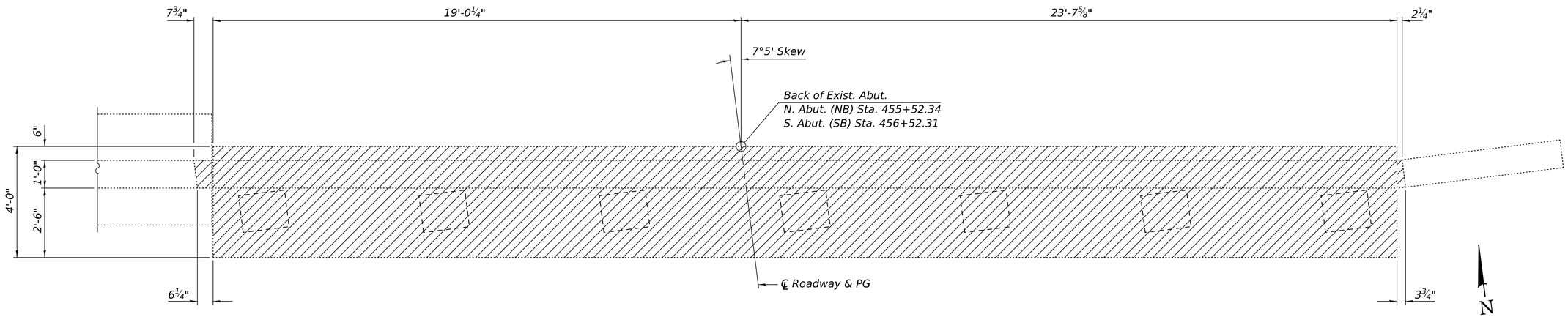

ABUTMENT PLAN

(North Abutment NB; South Abutment SB)

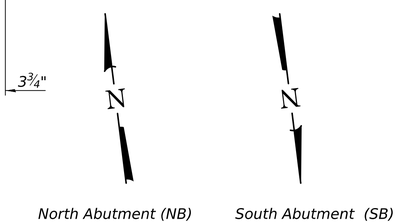

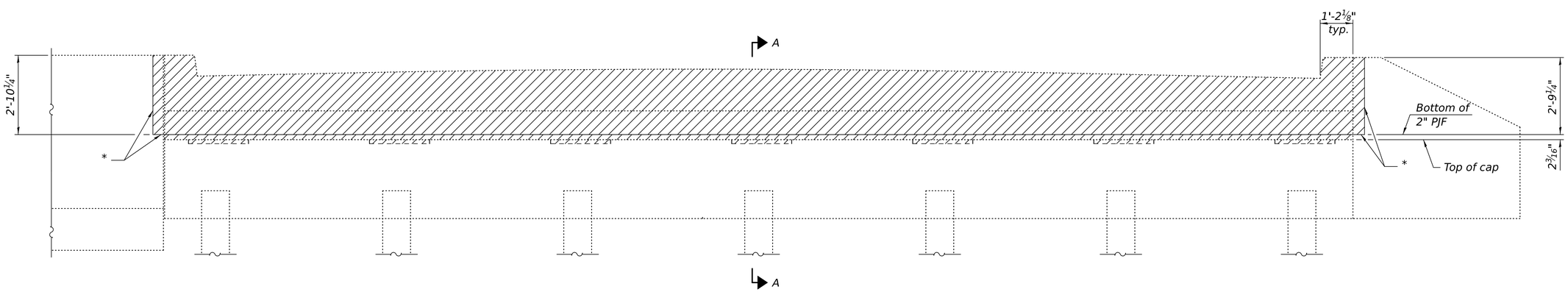

ELEVATION

(North Abutment NB Looking North; South Abutment SB similar)

* Sawcut existing wingwall or retaining wall.
Burn, grind smooth, and epoxy seal existing reinforcement and anchor bolts flush with proposed concrete surfaces. Cost included with Removal of Existing Superstructure.

Notes:
Hatched area indicates concrete removal. Cost included with Removal of Existing Superstructure.
See sheet 24 of 25 for Section A-A.

MODEL: 0380009 0016-66M80-022
FILE NAME: pw://ildot-pw.bentley.com:PWIDOT/Documents/IDOT Offices/Bureau of Bridges and Structures/OBM Projects/0380009/CADData/Structures/0380009-66M80.dgn

DESIGNED - RYAN P. NEGANGARD	EXAMINED	DATE MAY 1, 2026	
CHECKED - TIFFANY L. ADAMS	ENGINEER OF BRIDGE DESIGN		
DRAWN - ANDRO R. SAMANIEGO	PASSED	REVISED -	
CHECKED - R.P.N. / T.L.A.	ENGINEER OF BRIDGES AND STRUCTURES	REVISED -	

STATE OF ILLINOIS
DEPARTMENT OF TRANSPORTATION

CONCRETE REMOVAL
STRUCTURE NO. 038-0009 (NB) & 038-0010 (SB)

SHEET 22 OF 25 SHEETS

F.A.I. RTE.	SECTION	COUNTY	TOTAL SHEETS	SHEET NO.
57	(38-4B-2)BR	IROQUOIS	437	289
		CONTRACT NO. 66M80		
	ILLINOIS	FED. AID PROJECT		

5/1/2026 2:43:13 PM

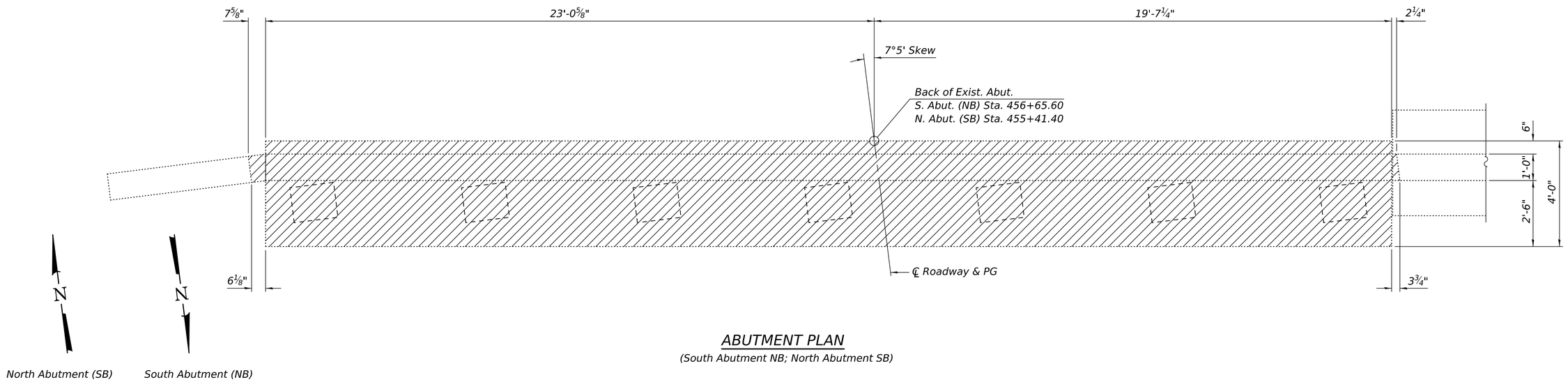

ABUTMENT PLAN

(South Abutment NB; North Abutment SB)

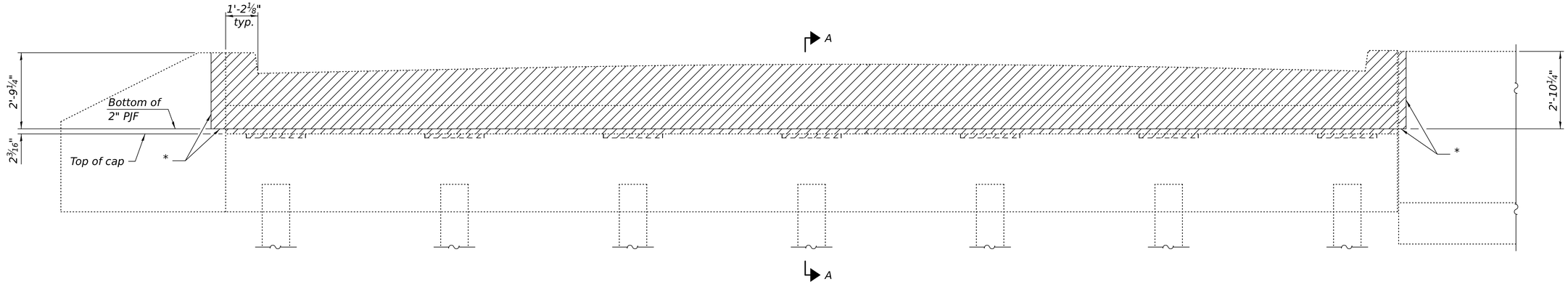

ELEVATION

(South Abutment NB Looking South; North Abutment SB similar)

* Sawcut existing wingwall or retaining wall.
Burn, grind smooth, and epoxy seal existing reinforcement and anchor bolts flush with proposed concrete surfaces. Cost included with Removal of Existing Superstructure.

Notes:
Hatched area indicates concrete removal. Cost included with Removal of Existing Superstructure.
See sheet 24 of 25 for Section A-A.

MODEL: 0380009 0010-66M80-023
FILE NAME: pw://ildot-pw.bentley.com:PWIDOT/Documents/IDOT Offices/Bureau of Bridges and Structures/OBM Projects/0380009/CADData/Structures/0380009-66M80.dgn

DESIGNED - RYAN P. NEGANGARD	EXAMINED	ENGINEER OF BRIDGE DESIGN	DATE	MAY 1, 2026	
CHECKED - TIFFANY L. ADAMS					
DRAWN - ANDRO R. SAMANIEGO	PASSED	ENGINEER OF BRIDGES AND STRUCTURES	REVISED	-	
CHECKED - R.P.N. / T.L.A.			REVISED	-	

5/1/2026 2:43:13 PM

STATE OF ILLINOIS
DEPARTMENT OF TRANSPORTATION

CONCRETE REMOVAL
STRUCTURE NO. 038-0009 (NB) & 038-0010 (SB)

SHEET 23 OF 25 SHEETS

F.A.I. RTE.	SECTION	COUNTY	TOTAL SHEETS	SHEET NO.
57	(38-4B-2)BR	IROQUOIS	437	290
		CONTRACT NO. 66M80		
	ILLINOIS	FED. AID PROJECT		

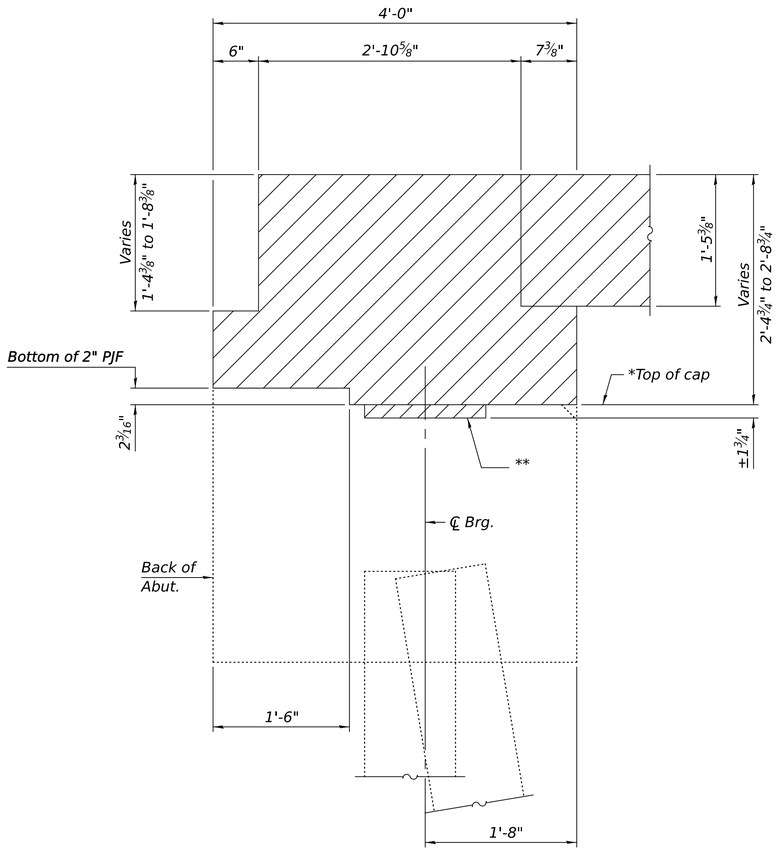

SECTION A-A

(Horizontal dimensions are at right ∠'s)

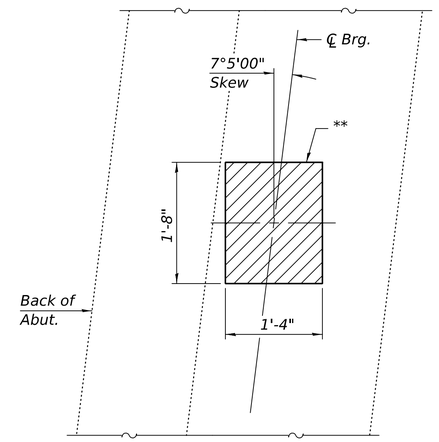

CONCRETE REPLACEMENT UNDER BEARINGS

*Burn, grind smooth, and epoxy seal existing reinforcement and anchor bolts flush with proposed concrete surfaces. Cost included with Removal of Existing Superstructure.

**Remove and repour a portion of concrete under the bearings. Cost included with Removal of Existing Superstructure.

Note:
Hatched area indicates concrete removal.
Cost included with Removal of Existing Superstructure.

MODEL: 0380009 0010-66M80-024
FILE NAME: pw://ildot-pw.bentley.com:PW/IDOT/Documents/IDOT Offices/Bureau of Bridges and Structures/OBM Projects/0380009/CADData/Structures/0380009-66M80.dgn

DESIGNED - RYAN P. NEGANGARD	EXAMINED	ENGINEER OF BRIDGE DESIGN	DATE MAY 1, 2026	STATE OF ILLINOIS DEPARTMENT OF TRANSPORTATION	CONCRETE REMOVAL STRUCTURE NO. 038-0009 (NB) & 038-0010 (SB)
CHECKED - TIFFANY L. ADAMS					
DRAWN - ANDRO R. SAMANIEGO	PASSED	ENGINEER OF BRIDGES AND STRUCTURES	REVISED -		SHEET 24 OF 25 SHEETS
CHECKED - R.P.N. / T.L.A.			REVISED -		

F.A.I. RTE.	SECTION	COUNTY	TOTAL SHEETS	SHEET NO.
57	(38-4B-2)BR	IROQUOIS	437	291
		CONTRACT NO. 66M80		
		ILLINOIS	FED. AID PROJECT	

5/1/2026 2:43:14 PM

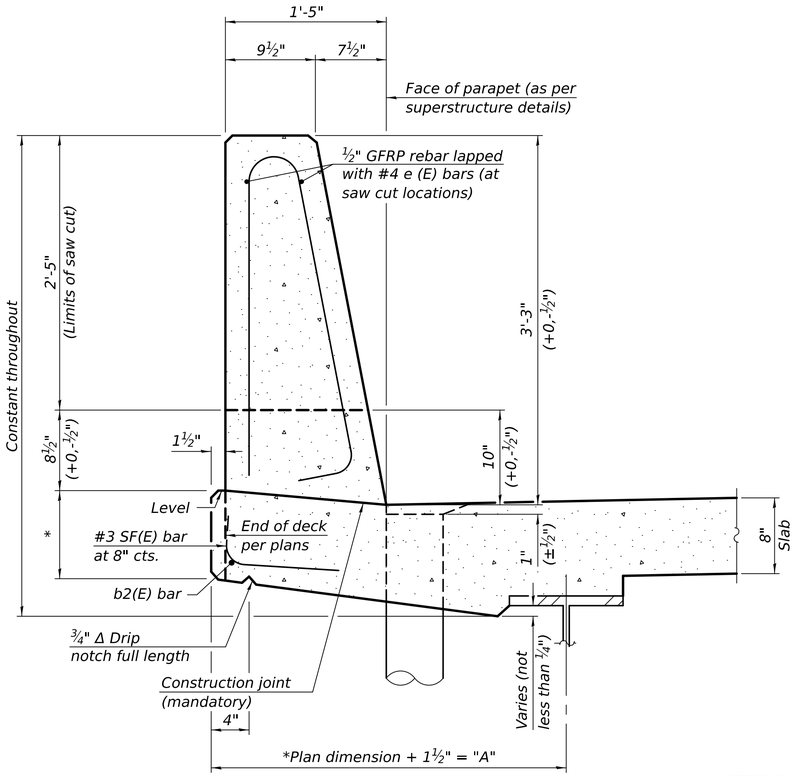

39" CONSTANT-SLOPE PARAPET SECTION

(Showing dimensions, d(E), and ½" Ø GFRP rebar)

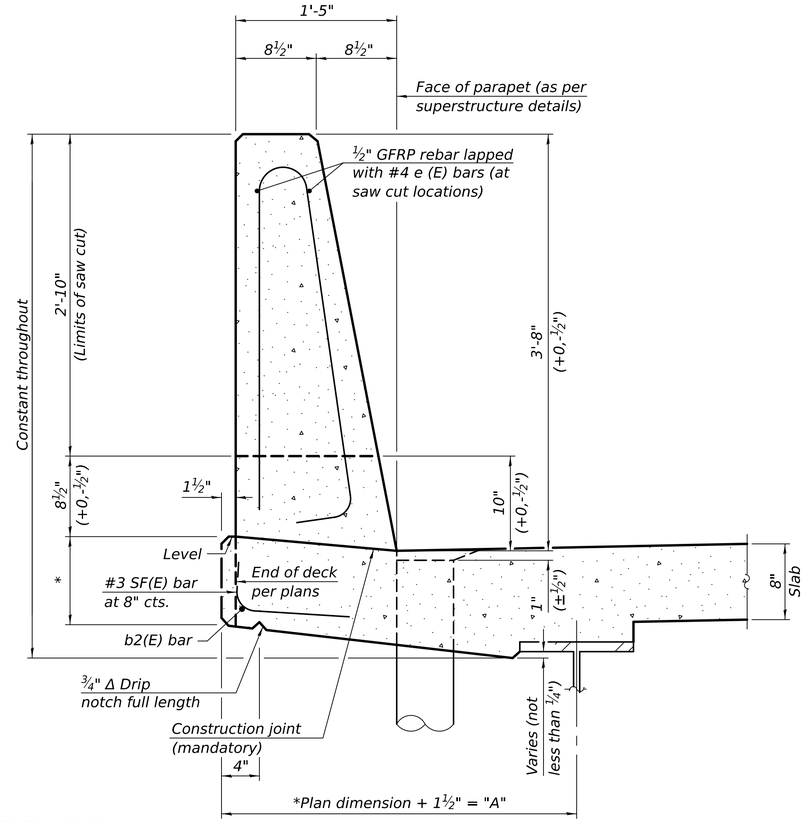

44" CONSTANT-SLOPE PARAPET SECTION

(Showing dimensions, d(E), and ½" Ø GFRP rebar)

STEEL SUPERSTRUCTURES

*See Superstructure Details.

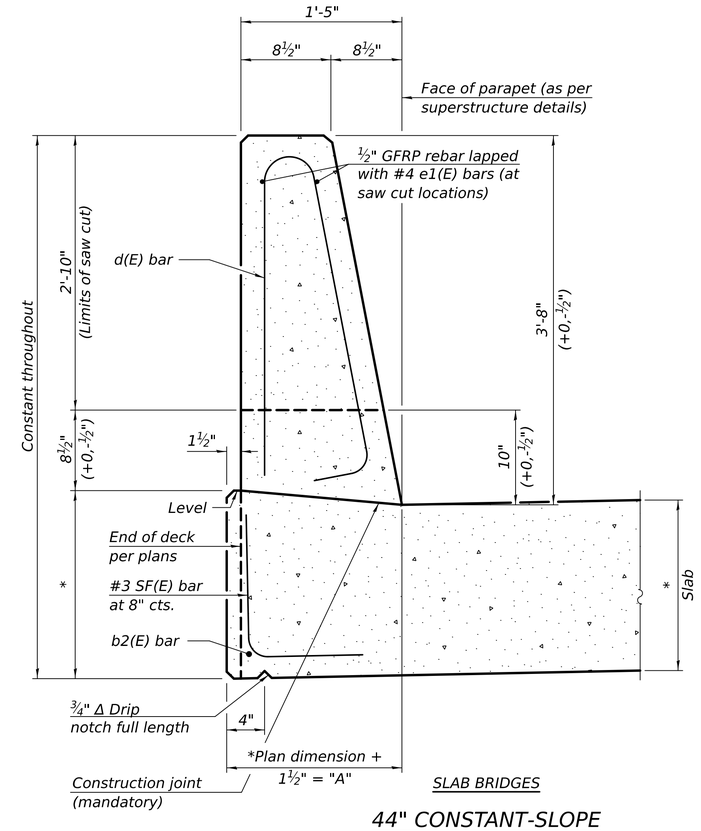

SLAB BRIDGES

44" CONSTANT-SLOPE PARAPET SECTION

(Showing dimensions, d(E), and ½" Ø GFRP rebar)

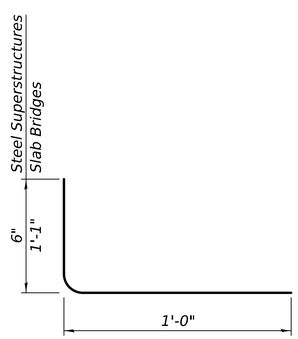

SF(E) BAR

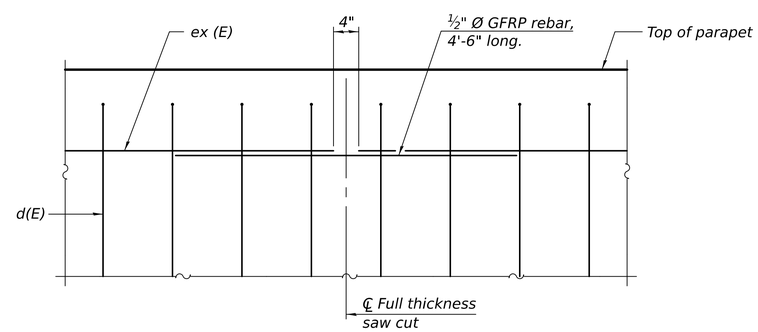

DETAIL - GFRP REBAR STIFFENING ELEVATION

(Place as shown in parapet section at each parapet joint location.)

Notes:
All dimensions shall remain the same as shown on superstructure details, except dimension "A" which is to be revised as shown.
Additional concrete needed to revise dimension "A" (39" and 44" parapets):
Steel Superstructures: 0.00348 cu. yds./ft.
Slab Bridge Superstructures: 0.00659 cu. yds./ft.
Place full depth aluminum sheets as shown on superstructure details.
Replace all cork joint filler locations with a full thickness saw cut.
Steel and slab superstructures shown. Other superstructure types similar.

MODEL: 0380009 0010-66M80-025
FILE NAME: pw://ildot-pw.bentley.com:PWIDOT/Documents/IDOT Offices/Bureau of Bridges and Structures/OBM Projects/0380009/CADData/Structures/0380009-66M80.dgn

DESIGNED - RYAN P. NEGANGARD	EXAMINED	ENGINEER OF BRIDGE DESIGN	DATE MAY 1, 2026	STATE OF ILLINOIS DEPARTMENT OF TRANSPORTATION	CONCRETE PARAPET SLIPFORMING OPTION STRUCTURE NO. 038-0009 (NB) & 038-0010 (SB)
CHECKED - TIFFANY L. ADAMS					
DRAWN - ANDRO R. SAMANIEGO	PASSED	ENGINEER OF BRIDGES AND STRUCTURES	REVISED -		SHEET 25 OF 25 SHEETS
CHECKED - R.P.N. / T.L.A.			REVISED -		

F.A.I. RTE.	SECTION	COUNTY	TOTAL SHEETS	SHEET NO.
57	(38-4B-2)BR	IROQUOIS	437	292
		CONTRACT NO. 66M80		
	ILLINOIS	FED. AID PROJECT		

5/1/2026 2:43:14 PM

Existing Structure: S.N. 038-0031 was originally constructed in 1967 as Section 38-5HB-2. In 2003, the deck was replaced and widened, the piers were widened, outside beams were added, and new wingwalls and abutment stems were constructed. The structure is a four span continuous R.C. deck slab that is composite with the wide-flange, steel I-beam stringers, supported by stub abutments on both metal shell and concrete piles, and piers on spread footings. The back-to-back abutment length measures 222'-0" and the out-to-out deck measures 69'-2". The span lengths are 41'-9", 67'-4", 67'-4", and 41'-9". The structure is skewed 2°04'30" left forward. One lane of traffic in each direction will be maintained utilizing stage construction.

No Salvage.

INDEX OF SHEETS

SHEET NO.	TITLE
1	GENERAL PLAN AND ELEVATION
2	GENERAL DATA AND MISCELLANEOUS DETAILS
3	STAGE CONSTRUCTION DETAILS
4	DECK, MEDIAN CURB, AND APPROACH SLAB REPAIRS
5	DECK, MEDIAN CURB, AND APPROACH SLAB REPAIRS - AS BUILT
6-7	PARAPET REPAIR DETAILS
8	JOINT REMOVAL DETAILS
9-10	JOINT REPLACEMENT DETAILS
11-12	PREFORMED JOINT STRIP SEAL - SIDEWALK
13-14	ABUTMENT REPAIR DETAILS
15-17	PIER REPAIR DETAILS
18	PIER CRASH WALL REMOVAL DETAILS
19	PIER CRASH WALL EXTENSION
20	SLOPE WALL REPAIRS
21	BAR SPLICER ASSEMBLY AND MECHANICAL SPLICER DETAILS

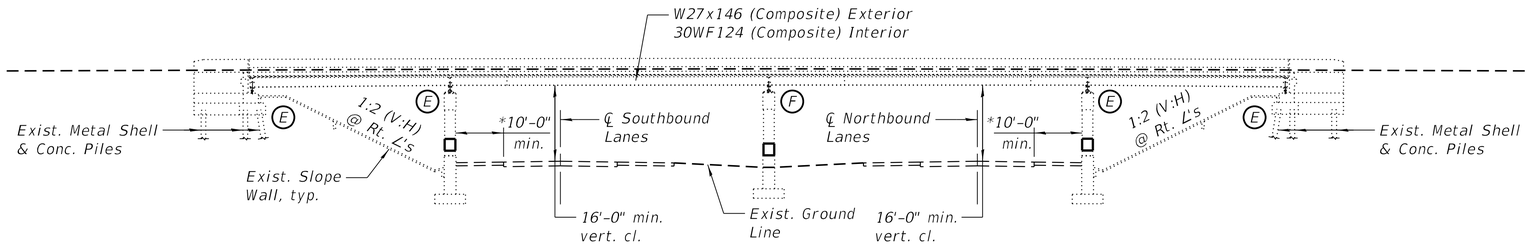

ELEVATION

(Looking North)
*Dimension @ Rt. ∠'s to Roadway

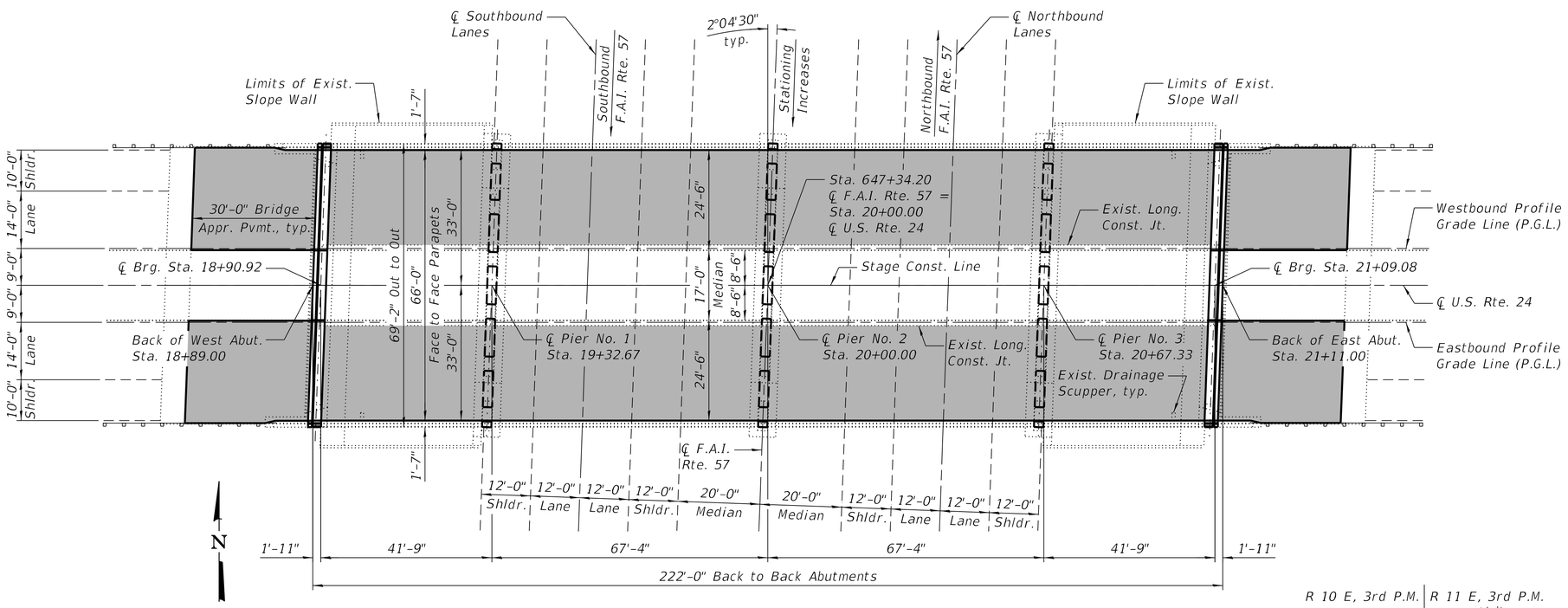

PLAN

DESIGN SPECIFICATIONS

2002 AASHTO Standard Specifications for Highway Bridges

EXISTING DESIGN STRESSES

FIELD UNITS (1966):

f'c = 3,500 psi
fy = 40,000 psi (Reinforcement)
fy = 40,000 psi (Structural Steel)

FIELD UNITS (2002):

f'c = 3,500 psi
fy = 60,000 psi (Reinforcement)
fy = 50,000 psi (Structural Steel)

PROPOSED DESIGN STRESSES

FIELD UNITS:

f'c = 3,500 psi
f'c = 4,000 psi (Superstructure)
fy = 60,000 psi (Reinforcement)

LOADING HS20-44

SCOPE OF WORK

1.) Maintain one lane of traffic in each direction utilizing stage construction.
2.) Install protective shield over driving lanes.
3.) Scarification of approach slabs and bridge deck for latex concrete overlay.
4.) Concrete repair of bridge deck and approach slabs.
5.) Repair existing median curbs.
6.) Repair existing parapets.
7.) Replace existing expansion joints with Preformed Joint Strip Seal.
8.) Remove existing joint seal and install replacement silicone joint sealer at approach slabs.
9.) Fully clean and paint the existing structural steel and bearings.
10.) Repair existing abutments and piers.
11.) Pier crash wall modifications.
12.) Repair existing slope walls.

LEGEND

Limits of Bridge Deck Scarification ¾", Bridge Deck Latex Concrete Overlay, 2¼"

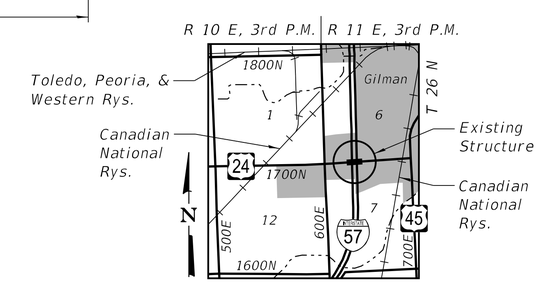

LOCATION SKETCH

STATE OF ILLINOIS
WILLIAM MARDAUSS
081-008264
LICENSED STRUCTURAL ENGINEER

WILLIAM MARDAUSS, P.E., S.E. DATE: 03/20/2026
LICENSE EXPIRES 11 / 30 / 2026

U.S. RTE. 24 OVER F.A.I. RTE. 57
F.A.I. RTE. 57 - SEC. *
IROQUOIS COUNTY
STATION 20+00.00
STRUCTURE NO. 038-0031

Farnsworth GROUP
2709 McGRAW DRIVE
BLOOMINGTON, ILLINOIS 61704
(309) 663-8435 / info@f-w.com

	DESIGNED - EMW	REVISED
	CHECKED - VPT	REVISED
	DRAWN - DJM	REVISED
DATE - 03/20/2026	CHECKED - VPT	REVISED

STATE OF ILLINOIS
DEPARTMENT OF TRANSPORTATION

GENERAL PLAN AND ELEVATION
STRUCTURE NO. 038-0031

SHEET NO. 1 OF 21 SHEETS

F.A.I. RTE.	SECTION	COUNTY	TOTAL SHEETS	SHEET NO.
57	(38-4,38-5)BR,D,CR	IROQUOIS	437	293
		CONTRACT NO. 66M80		
		ILLINOIS		

TOTAL BILL OF MATERIAL

ITEM	UNIT	TOTAL
Concrete Removal	Cu. Yd.	30.1
Protective Shield	Sq. Yd.	766
Concrete Structures	Cu. Yd.	36.3
Concrete Superstructure	Cu. Yd.	23.0
Bridge Deck Grooving	Sq. Yd.	1,410
Protective Coat	Sq. Yd.	1,582
Reinforcement Bars, Epoxy Coated	Pound	7,040
Bar Splicers	Each	36
Preformed Joint Strip Seal	Foot	136.0
Concrete Sealer	Sq. Ft.	8,592
Bridge Deck Concrete Crack Sealer	Foot	86
Slope Wall Crack Sealing	Foot	236
Slope Wall Repair	Sq. Yd.	5
Bridge Deck Latex Concrete Overlay, 2 1/4 Inches	Sq. Yd.	1,501
Containment and Disposal of Lead Paint Cleaning Residues No. 1	L Sum	1
Cleaning and Painting Steel Bridge No. 1	L Sum	1
Bridge Deck Scarification 3/4"	Sq. Yd.	1,501
Structural Repair of Concrete (Depth Equal to or Less Than 5 Inches)	Sq. Ft.	714
Deck Slab Repair (Full Depth, Type I)	Sq. Yd.	5
Silicone Joint Sealer, 1.75"	Foot	100

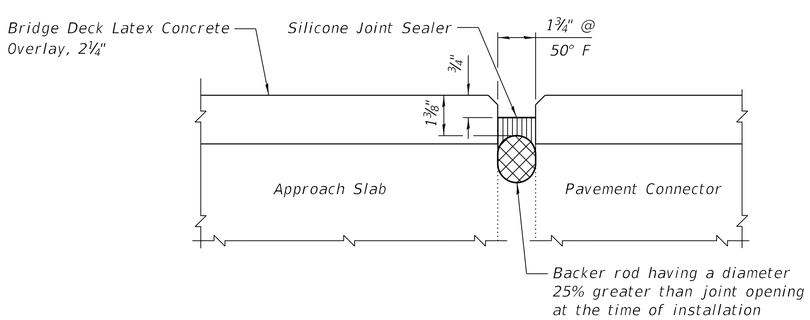

SILICONE JOINT SEALER DETAIL AT APPROACH SLAB

Remove existing joint seal and install replacement silicone joint sealer at approach slabs.

GENERAL NOTES:

1.) Reinforcement bars designated (E) shall be epoxy coated.
2.) Prior to pouring the new concrete deck, all heavy or loose rust, loose mill scale, and other loose or detrimental foreign material shall be removed from the surfaces that will be in contact with new concrete (SSPC-SP3 standards). Tightly adhered paint may remain unless otherwise noted. Removal shall be accomplished by methods that will not damage the steel and the cost will be paid for according to Article 109.04 of the Standard Specifications.
As directed by the Engineer, existing construction accessories welded to the top flange of beams and girders shall be removed. The weld areas shall be ground flush and inspected for cracks using magnetic particle testing (MT) or dye penetrant testing (PT) by qualified personnel approved by the Engineer. Any cracks that cannot be removed by grinding ¼ inch deep shall be identified and reported to the Bureau of Bridges and Structures for further disposition. The cost of removing welded accessories, grinding and inspecting weld areas and grinding cracks will be paid for according to Article 109.04 of the Standard Specifications.
3.) Plan dimensions and details relative to the existing structure have been taken from existing plans and are subject to nominal construction variations. The Contractor shall field verify existing dimensions and details affecting new construction and make necessary approved adjustments prior to construction or ordering of materials. Such variations shall not be cause for additional compensation for a change in scope of work, however, the Contractor will be paid for the quantity actually furnished at the unit price bid for the work.
4.) Existing reinforcement bars extending into the removal area shall be cleaned, straightened, and incorporated into the new construction. Any reinforcement bars that are damaged during concrete removal shall be replaced with an approved bar splicer or anchorage system at the Contractor's expense.
5.) The Engineer shall show actual locations and size of deck, median curb, and approach slab repairs on As-built Plans.
6.) Joint openings shall be adjusted according to Article 520.04 of the Std. Specs. when the deck is poured at an ambient temperature other than 50°F.
7.) Protective Coat shall only be applied to new concrete areas, including the deck and parapet at the joint replacement, and the top surface of the Latex Concrete Overlay. Protective Coat shall also be applied to the finished surfaces of all concrete repairs to the parapets.
8.) Concrete Sealer shall be applied according to Section 587 of the Standard Specifications to the existing top and inside vertical faces of the parapets, end posts, and wings; all exposed faces of the abutments and wingwalls; and to all exposed faces of the piers located below the bearings after installation of proposed crash wall extensions.
9.) Cleaning and painting of the existing structural steel shall be as specified in the special provisions for Cleaning and Painting Existing Steel Structures. All girders, bearings and other structural steel shall be cleaned per Near White Blast Cleaning - SSPC-SP10. The designated areas cleaned per Near White Blast Cleaning shall be painted according to the requirements of the Organic Zinc-Rich Primer / Epoxy / Urethane (OZ/E/U) paint system. The color of the final finish coat for all interior steel surfaces shall be Gray, Munsell No. 5B 7/1. The color of the final finish coat for the exterior and bottom flange of the fascia girders shall be Interstate Green, Munsell No. 7.5G 4/8.
10.) SSPC QP1 and QP2 Contractor Certification is required for this Contract.
11.) All concrete related work shall be completed prior to any painting of structural steel.
12.) The Contractor may request copies of existing construction plans that are currently on file with the Department. The request shall be in writing with the understanding that any reproduction cost will be at the Contractor's expense at no additional cost to the Department.
13.) A minimum of (4) air monitors will be required to monitor abrasive blasting operations at this site. See special provisions for "Containment and Disposal of Lead Paint Cleaning Residues."
14.) The existing structural steel coating contains lead. The Contractor shall take appropriate precautions to address the presence of lead on this project.
15.) All structural steel shall conform to AASHTO Classification M-270 Gr. 36 unless otherwise noted.

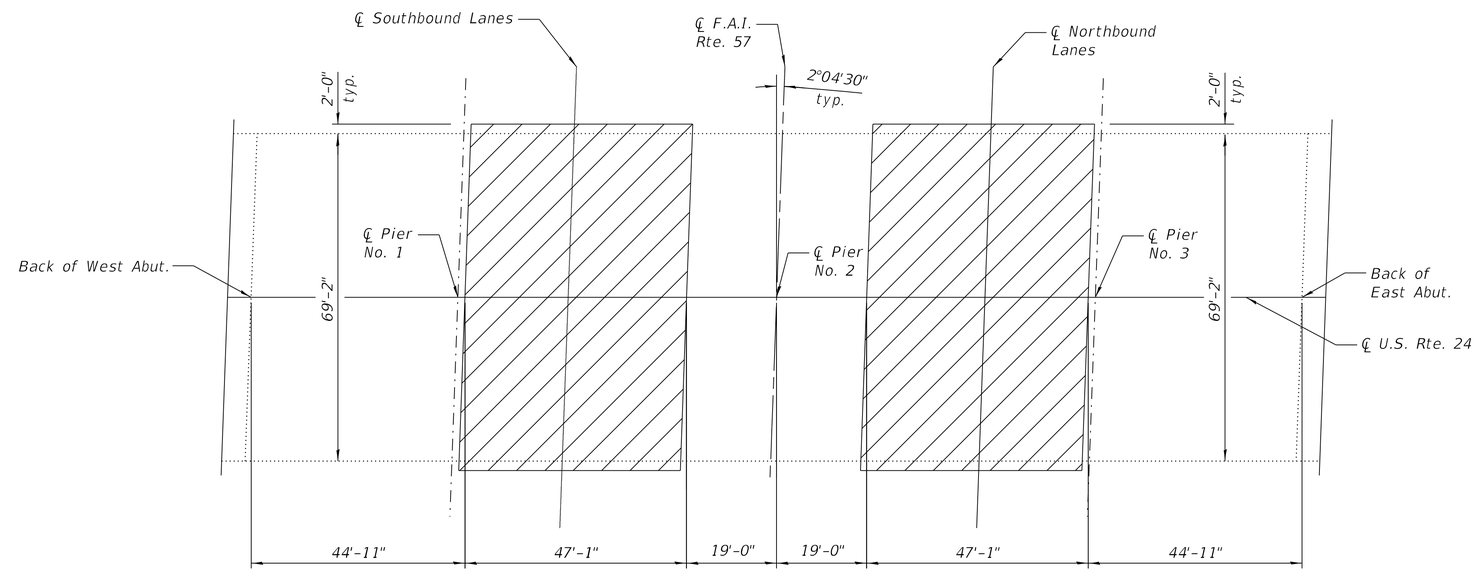

PLAN

(Limits of Protective Shield)

Farnsworth GROUP
2709 McGRAW DRIVE
BLOOMINGTON, ILLINOIS 61704
(309) 663-8435 / info@f-w.com

	DESIGNED - EMW	REVISED
	CHECKED - VPT	REVISED
	DRAWN - DJM	REVISED
DATE - 03/20/2026	CHECKED - VPT	REVISED

STATE OF ILLINOIS
DEPARTMENT OF TRANSPORTATION

GENERAL DATA AND MISCELLANEOUS DETAILS
STRUCTURE NO. 038-0031

SHEET NO. 2 OF 21 SHEETS

F.A.I. RTE.	SECTION	COUNTY	TOTAL SHEETS	SHEET NO.
57	(38-4,38-5)BR,D,CR	IROQUOIS	437	294
		CONTRACT NO. 66M80		
		ILLINOIS		

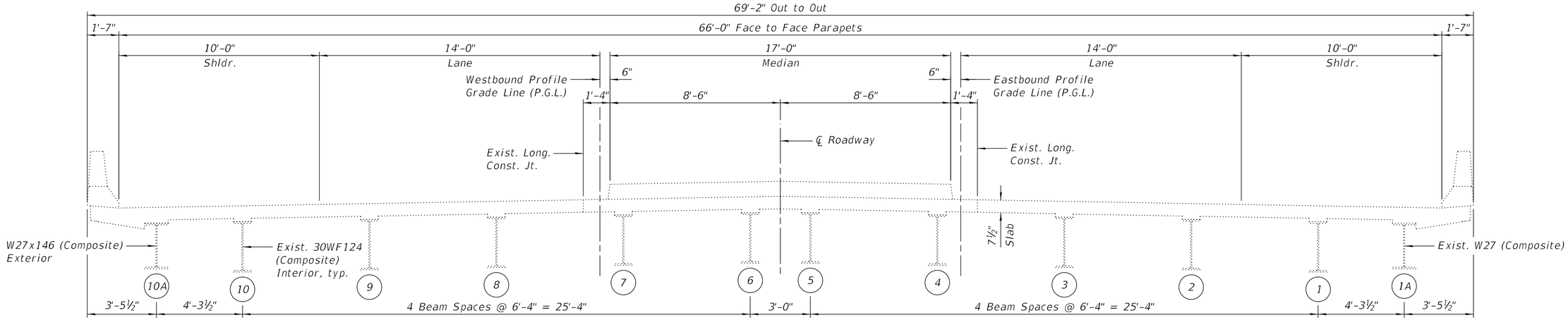

EXISTING CROSS SECTION

(Looking East)
*Joint Replacement

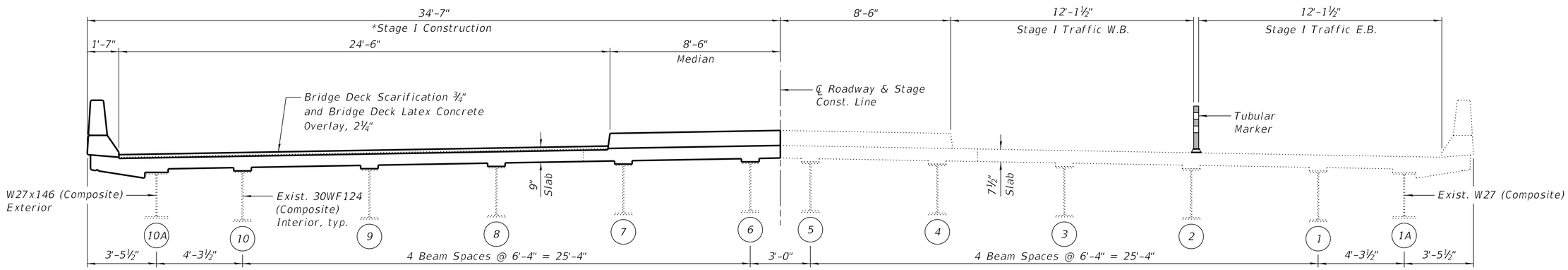

STAGE I CONSTRUCTION

(Looking East)
*Joint Replacement

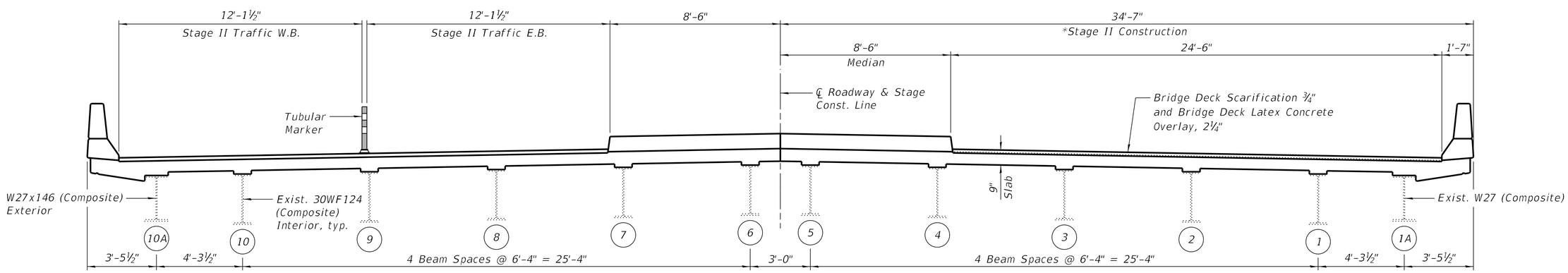

STAGE II CONSTRUCTION

(Looking East)
*Joint Replacement

NOTE:

See Highway Standard 701901 for Tubular Marker.

Farnsworth GROUP
2709 McGRAW DRIVE
BLOOMINGTON, ILLINOIS 61704
(309) 663-8435 / info@f-w.com

	DESIGNED - EMW	REVISED
	CHECKED - VPT	REVISED
	DRAWN - DJM	REVISED
DATE - 03/20/2026	CHECKED - VPT	REVISED

STATE OF ILLINOIS
DEPARTMENT OF TRANSPORTATION

STAGE CONSTRUCTION DETAILS
STRUCTURE NO. 038-0031

SHEET NO. 3 OF 21 SHEETS

F.A.I. RTE.	SECTION	COUNTY	TOTAL SHEETS	SHEET NO.
57	(38-4,38-5)BR,D,CR	IROQUOIS	437	295
		CONTRACT NO. 66M80		
	ILLINOIS			

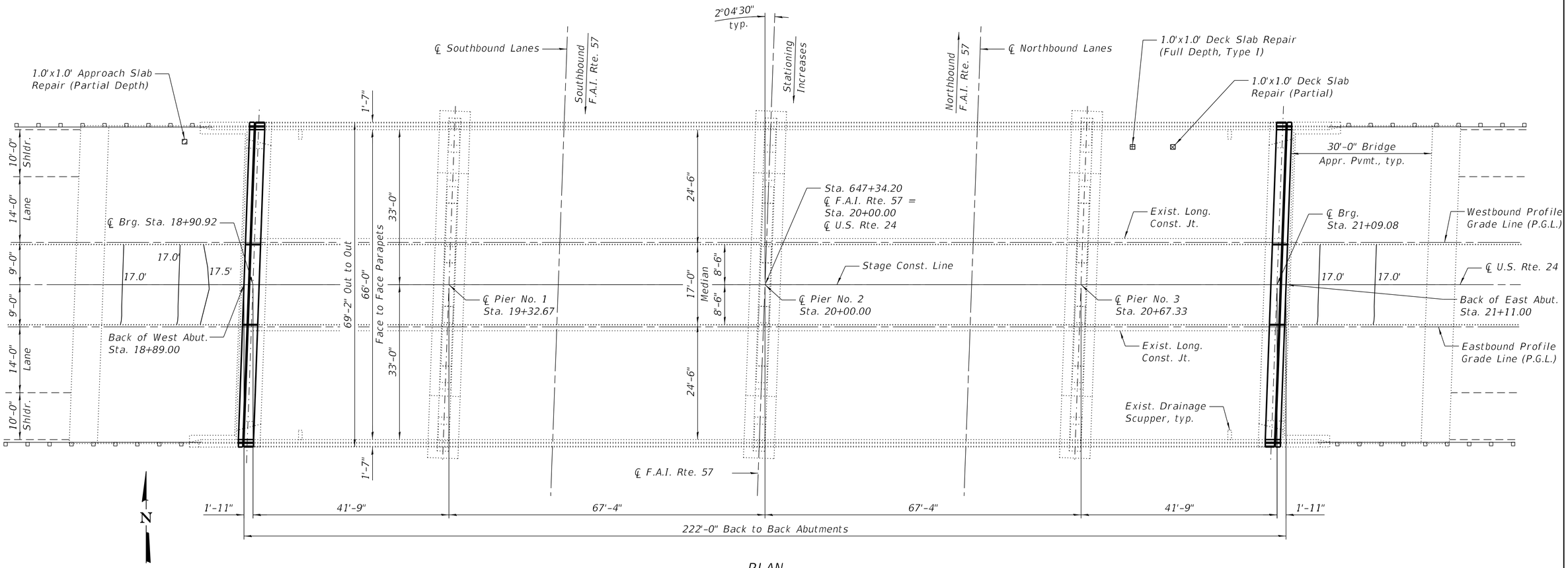

PLAN

LEGEND

L.F. — Bridge Deck Concrete Crack Sealer

*Approach Slab Repair (Partial Depth)

*Deck Slab Repair (Partial)

Deck Slab Repair (Full Depth, Type I)

BILL OF MATERIAL

Item	Unit	Total
Bridge Deck Concrete Crack Sealer	Foot	86
Deck Slab Repair (Full Depth, Type I)	Sq. Yd.	5

NOTES:

1.) The repair areas shown are estimated based on a field inspection conducted in September 2023. The actual repair areas required shall be verified according to the special provisions, and documented by the Engineer on the As Built plan sheet.

2.) *Areas of Deck Slab Repair (Partial) and Approach Slab Repair (Partial Depth) are for information only. Cost included with Bridge Deck Latex Concrete Overlay, 2¼".

3.) Quantities displayed in the Bill of Material with units of Sq. Yd. have been increased beyond the areas indicated in the Plan view shown on this sheet in order to provide a minimum of 5 Sq. Yd. for the purpose of establishing a unit price.

Farnsworth GROUP
2709 McGRAW DRIVE
BLOOMINGTON, ILLINOIS 61704
(309) 663-8435 / info@f-w.com

	DESIGNED - EMW	REVISED
	CHECKED - VPT	REVISED
	DRAWN - DJM	REVISED
DATE - 03/20/2026	CHECKED - VPT	REVISED

STATE OF ILLINOIS
DEPARTMENT OF TRANSPORTATION

DECK, MEDIAN CURB, AND APPROACH SLAB REPAIRS
STRUCTURE NO. 038-0031

SHEET NO. 4 OF 21 SHEETS

F.A.I. RTE.	SECTION	COUNTY	TOTAL SHEETS	SHEET NO.
57	(38-4,38-5)BR,D,CR	IROQUOIS	437	296
		CONTRACT NO. 66M80		
		ILLINOIS		

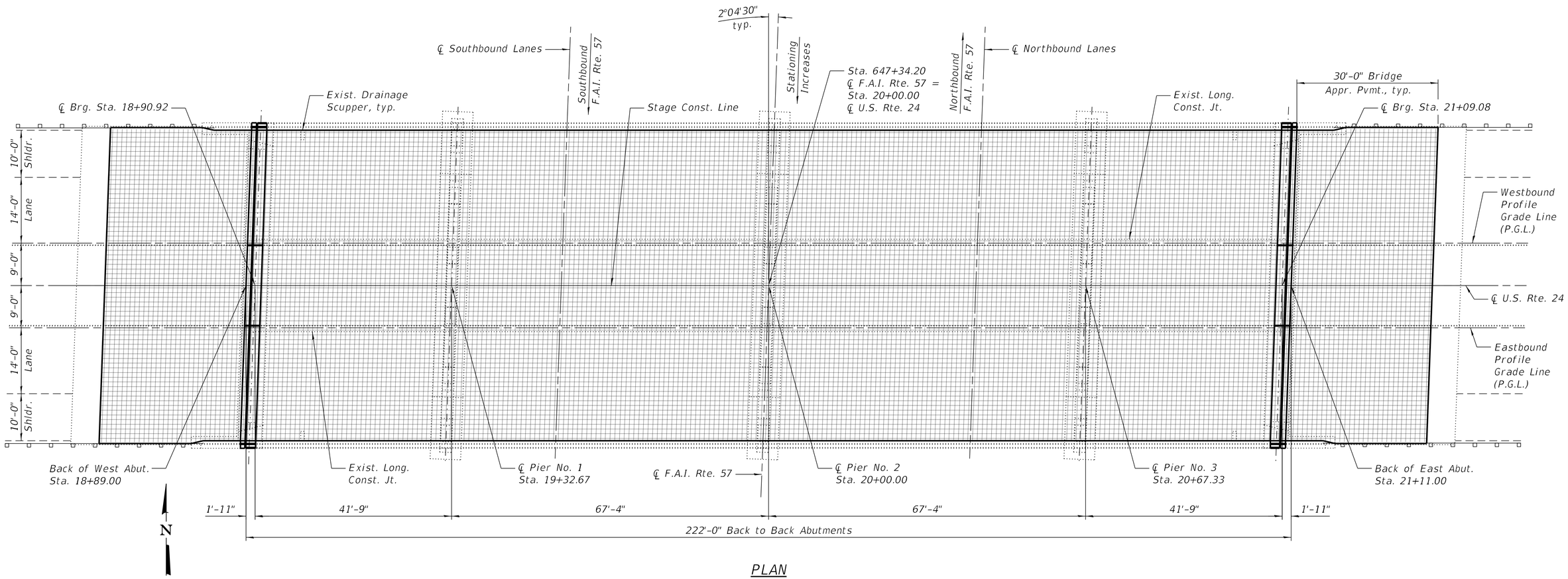

PLAN

NOTES:

1.) The Engineer shall record the As-Built deck, median curb, and approach slab repair areas on this sheet.
2.) The reference grid was drawn in 1' transverse and longitudinal increments.

Farnsworth GROUP
2709 McGRAW DRIVE
BLOOMINGTON, ILLINOIS 61704
(309) 663-8435 / info@f-w.com

	DESIGNED - EMW	REVISED
	CHECKED - VPT	REVISED
	DRAWN - DJM	REVISED
DATE - 03/20/2026	CHECKED - VPT	REVISED

STATE OF ILLINOIS
DEPARTMENT OF TRANSPORTATION

DECK, MEDIAN CURB, AND APPROACH SLAB REPAIRS – AS BUILT
STRUCTURE NO. 038–0031

SHEET NO. 5 OF 21 SHEETS

F.A.I. RTE.	SECTION	COUNTY	TOTAL SHEETS	SHEET NO.
57	(38-4,38-5)BR,D,CR	IROQUOIS	437	297
		CONTRACT NO. 66M80		
	ILLINOIS			

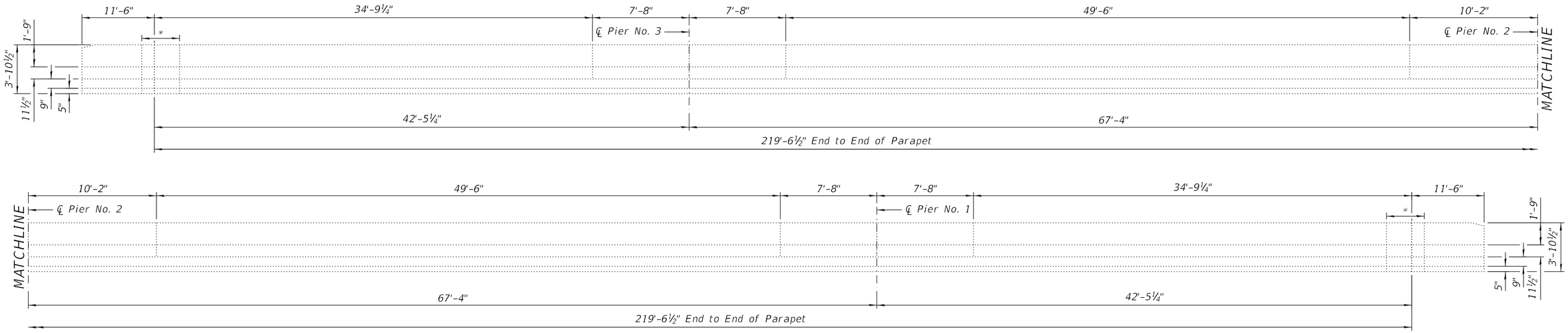

ELEVATION - OUTSIDE FACE OF NORTH PARAPET

(Looking South)

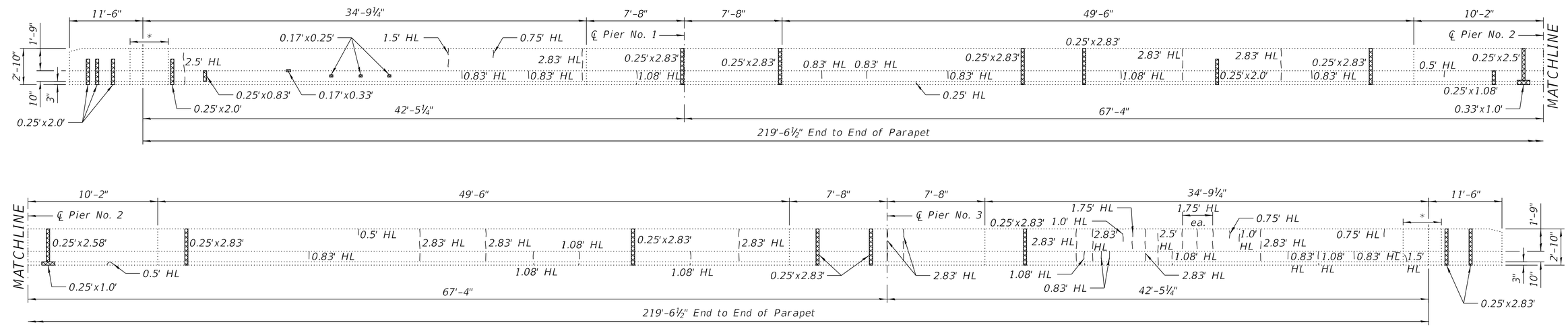

ELEVATION - INSIDE FACE OF NORTH PARAPET

(Looking North)

LEGEND

Structural Repair of Concrete (Depth Equal to or Less than 5 inches)

L.F. HL — — — Hairline Crack

BILL OF MATERIAL

Item	Unit	Total
Structural Repair of Concrete (Depth Equal to or Less Than 5 Inches)	Sq. Ft.	14

NOTES:

1.) The repair areas shown are estimated based on field inspections conducted in September 2023. The actual repair areas required shall be verified according to the special provisions.

2.) Lengths of Hairline Cracks for information only.

3.) *See Joint Removal Details on Sheet 8 of 21.

Farnsworth GROUP
2709 McGRAW DRIVE
BLOOMINGTON, ILLINOIS 61704
(309) 663-8435 / info@f-w.com

	DESIGNED - EMW	REVISED
	CHECKED - VPT	REVISED
	DRAWN - DJM	REVISED
DATE - 03/20/2026	CHECKED - VPT	REVISED

STATE OF ILLINOIS
DEPARTMENT OF TRANSPORTATION

PARAPET REPAIR DETAILS
STRUCTURE NO. 038-0031

SHEET NO. 6 OF 21 SHEETS

F.A.I. RTE.	SECTION	COUNTY	TOTAL SHEETS	SHEET NO.
57	(38-4,38-5)BR,D,CR	IROQUOIS	437	298
		CONTRACT NO. 66M80		
		ILLINOIS		

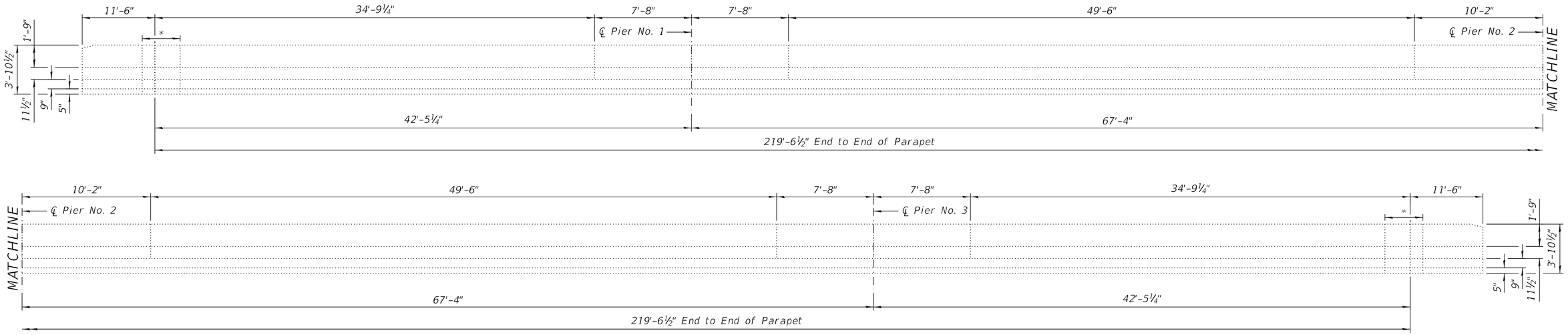

ELEVATION - OUTSIDE FACE OF SOUTH PARAPET

(Looking North)

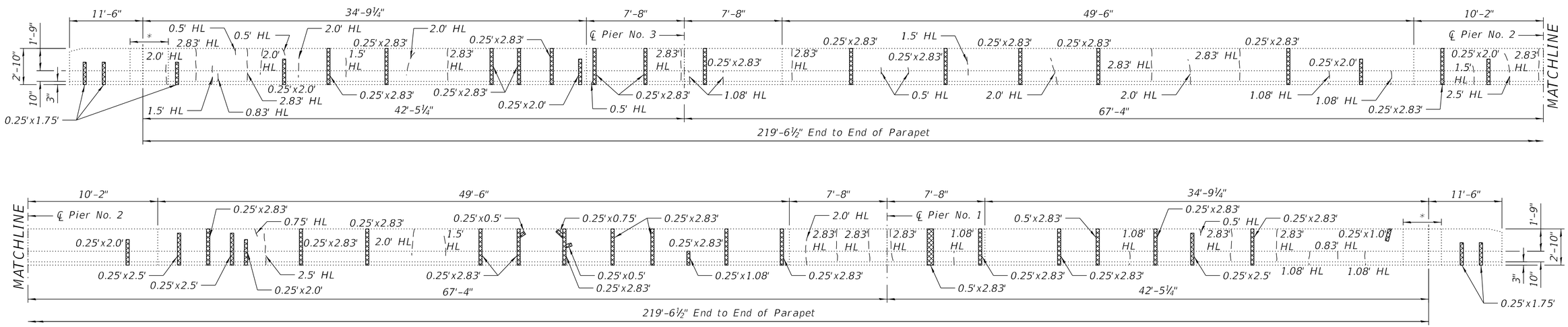

ELEVATION - INSIDE FACE OF SOUTH PARAPET

(Looking South)

LEGEND

Structural Repair of Concrete (Depth Equal to or Less than 5 inches)

L.F. HL — — — Hairline Crack

BILL OF MATERIAL

Item	Unit	Total
Structural Repair of Concrete (Depth Equal to or Less Than 5 Inches)	Sq. Ft.	30

NOTES:

1.) The repair areas shown are estimated based on field inspections conducted in September 2023. The actual repair areas required shall be verified according to the special provisions.

2.) Lengths of Hairline Cracks for information only.

3.) *See Joint Removal Details on Sheet 8 of 21.

Farnsworth GROUP
2709 McGRAW DRIVE
BLOOMINGTON, ILLINOIS 61704
(309) 663-8435 / info@f-w.com

	DESIGNED - EMW	REVISED
	CHECKED - VPT	REVISED
	DRAWN - DJM	REVISED
DATE - 03/20/2026	CHECKED - VPT	REVISED

STATE OF ILLINOIS
DEPARTMENT OF TRANSPORTATION

PARAPET REPAIR DETAILS
STRUCTURE NO. 038-0031

SHEET NO. 7 OF 21 SHEETS

F.A.I. RTE.	SECTION	COUNTY	TOTAL SHEETS	SHEET NO.
57	(38-4,38-5)BR,D,CR	IROQUOIS	437	299
		CONTRACT NO. 66M80		
		ILLINOIS		

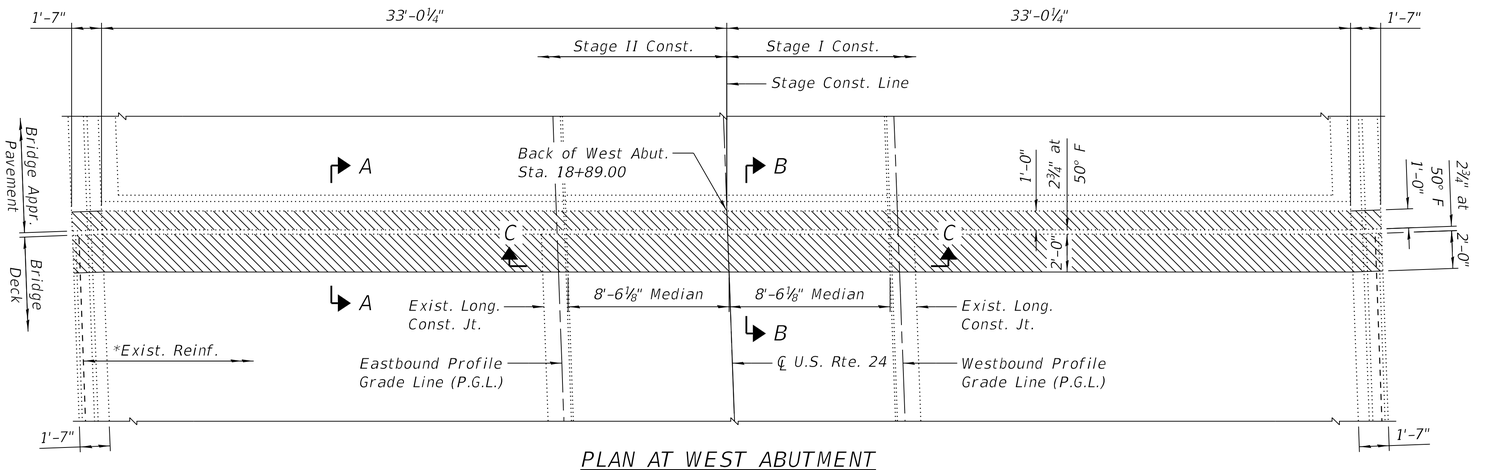

PLAN AT WEST ABUTMENT

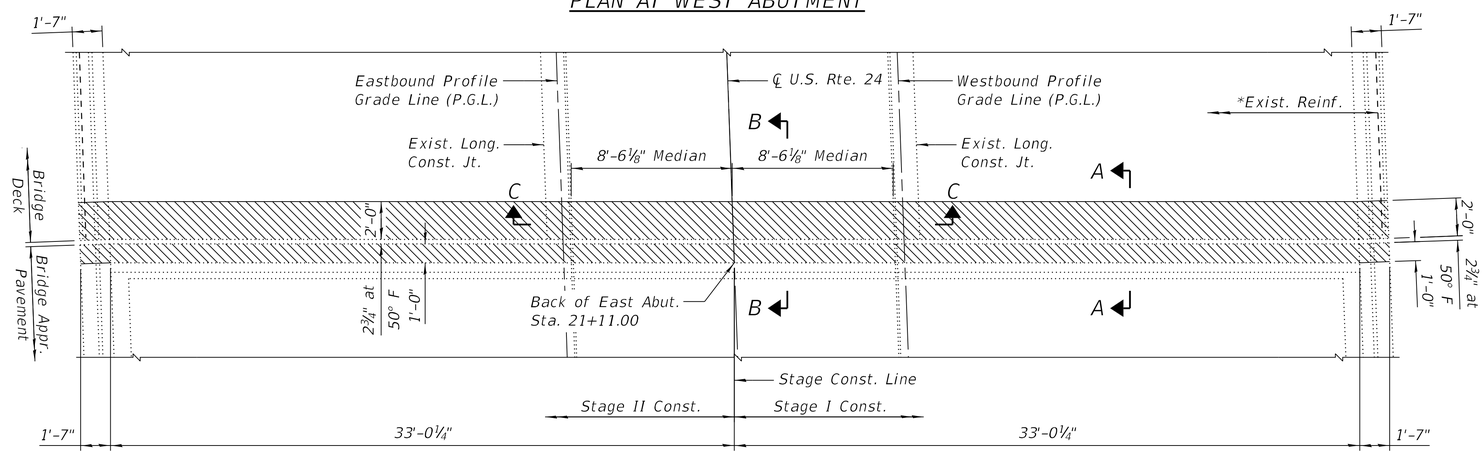

PLAN AT EAST ABUTMENT

PARTIAL PLAN SHOWING CONCRETE REMOVAL

Exist. Reinf. in median & parapet not shown for clarity.

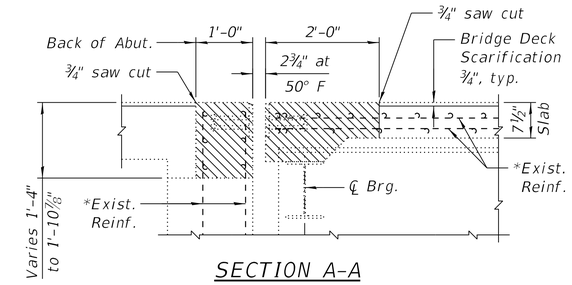

SECTION A-A

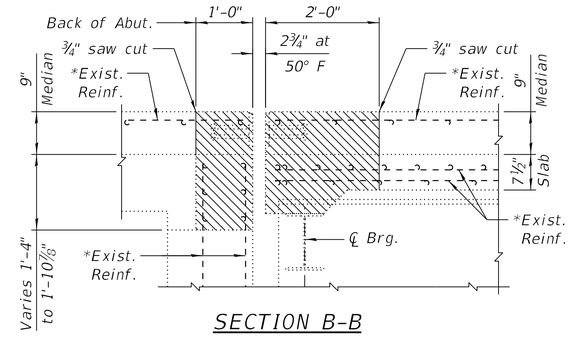

SECTION B-B

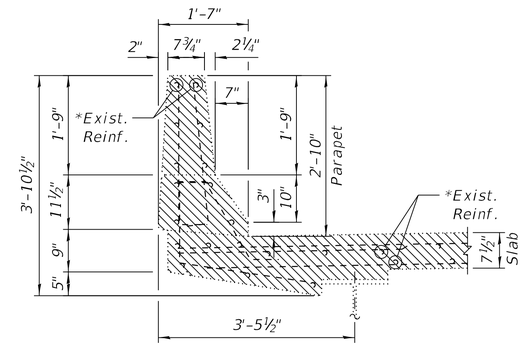

SECTION THRU PARAPET

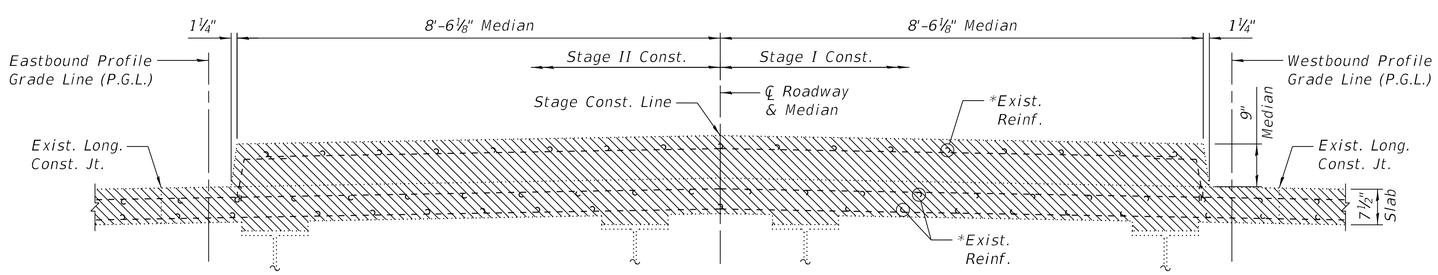

SECTION C-C

LEGEND

Concrete Removal

BILL OF MATERIAL

Item	Unit	Total
Concrete Removal	Cu. Yd.	21.4

NOTES:

1.) *Existing reinforcement extending into the removal area shall be cleaned, straightened and incorporated into the new construction. Cost shall be included with Concrete Removal.

2.) Any reinforcement bars that are damaged during concrete removal shall be replaced with an approved bar splicer or anchorage system. Cost shall be included with Concrete Removal.

Farnsworth GROUP
2709 McGRAW DRIVE
BLOOMINGTON, ILLINOIS 61704
(309) 663-8435 / info@f-w.com

	DESIGNED - EMW	REVISED
	CHECKED - VPT	REVISED
	DRAWN - DJM	REVISED
DATE - 03/20/2026	CHECKED - VPT	REVISED

STATE OF ILLINOIS
DEPARTMENT OF TRANSPORTATION

JOINT REMOVAL DETAILS
STRUCTURE NO. 038-0031

SHEET NO. 8 OF 21 SHEETS

F.A.I. RTE.	SECTION	COUNTY	TOTAL SHEETS	SHEET NO.
57	(38-4,38-5)BR,D,CR	IROQUOIS	437	300
		CONTRACT NO. 66M80		
		ILLINOIS		