EARTH TECH A tyco INTERNATIONAL LTD. COMPANY	F.A.U. RTE.	SECTION	COUNTY	TOTAL SHEETS	SHEET NO.
	1463	1010.1B	COOK	171	90
	STA.		TO STA.		
	FED. ROAD DIST. NO.	ILLINOIS	FED. AID PROJECT		

CONTRACT NO. 62196
S15 of S30

*Granular or solid flux filled headed studs conforming to Article 1006.32 of the Std. Specs., automatically end welded.

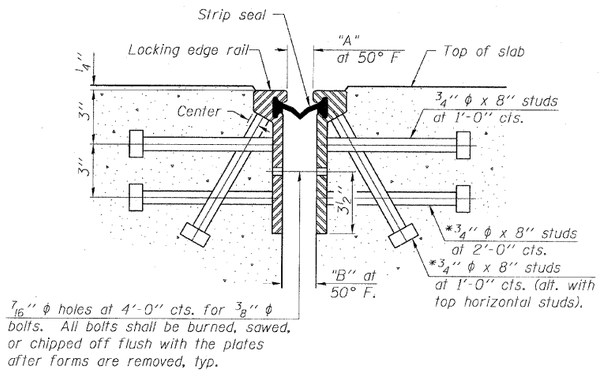

SECTION THRU
ROLLED RAIL JOINT

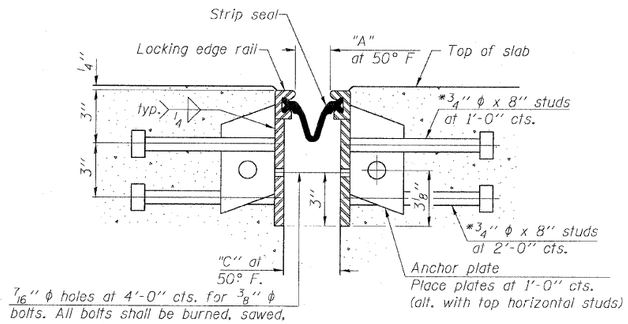

SECTION THRU
WELDED RAIL JOINT

Location	"A"	"B"	"C"
W. Abut.	1 1/2"	2"	2 3/4"
Pier 3	2"	2 1/2"	3 1/4"
E. Abut.	1 1/2"	2"	2 3/4"

Notes:

The strip seal shall be made continuous and shall have a minimum thickness of 1/4". The configuration of the strip seal shall match the configuration of the Locking Edge Rails. Open or "webbed" strip seal gland configurations are not permitted. The gland shall be sized for a maximum rated movement of 4 inches.

The height and thickness of the Locking Edge Rails shown are minimum dimensions. The actual configuration of the Locking Edge Rails and matching strip seal may vary from manufacturer to manufacturer. Flanged edge rails will not be allowed. Locking Edge Rails may be spliced at slope discontinuities and stage construction joints.

The manufacturer's recommended installation methods shall be followed.

The joint opening and deck dimensions detailed on the superstructure are based on a rolled rail expansion joint. If the Contractor elects to use the welded rail expansion joint, the opening and deck dimensions shall be modified according to the dimensions detailed on this sheet. Required modifications shall be made at no additional cost to the State.

All steel components shall be galvanized after fabrication according to Article 520.03 of the Standard Specifications.

Cost of all sliding plates, stud shear connectors, & connections shall be included with "Preformed Joint Strip Seal".

Exposed surfaces of top sliding plates shall be textured to meet all ADA requirements.

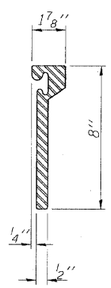

ROLLED
(EXTRUDED) RAIL

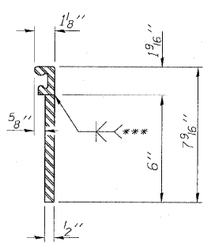

WELDED RAIL

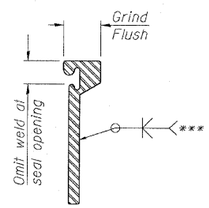

***Back gouge not required if complete joint penetration is verified by mock-up.

LOCKING EDGE
RAIL SPLICE

The inside of the locking edge rail groove shall be free of weld residue.

LOCKING EDGE RAILS

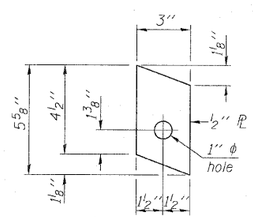

ANCHOR PL
(for welded rail)

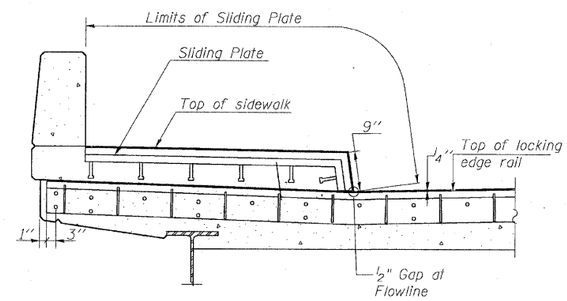

TYPICAL END TREATMENT
AT NORTH SIDEWALK
(Looking East)

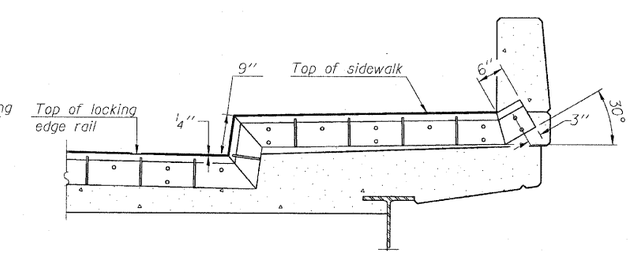

TYPICAL END TREATMENT
AT SOUTH SIDEWALK
(Looking East)

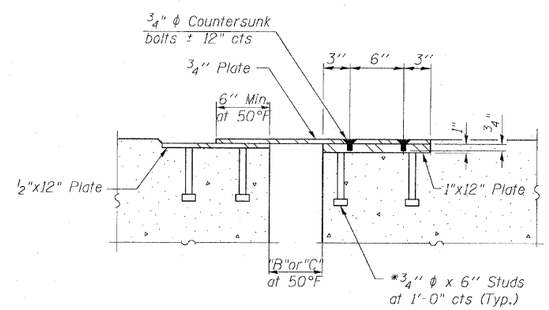

SECTION THRU
SLIDING PLATE

BILL OF MATERIAL

Item	Unit	Total
Preformed Joint Strip Seal	Foot	144

REVISIONS	
NAME	DATE

ILLINOIS DEPARTMENT OF TRANSPORTATION

PREFORMED JOINT STRIP SEAL

31 ST. STREET OVER M.J. & C.W.I.R.R.
F.A.U. ROUTE 1463 SECTION 159-1010.1B
COOK COUNTY
STATION 217+09.66
STR. NO. 016-0871

SCALE: VERT. HORIZ.
DATE JUNE 2008
DRAWN BY JHR
CHECKED BY CLS