CONTRACT NO. 68114

F.A.P. RTE.	SECTION	COUNTY	TOTAL SHEETS	SHEET NO.
22	135W-2: RS-5	FULTON	282	131
STA.		TO STA.		
FED. ROAD DIST. NO.	ILLINOIS	FED. AID PROJECT		

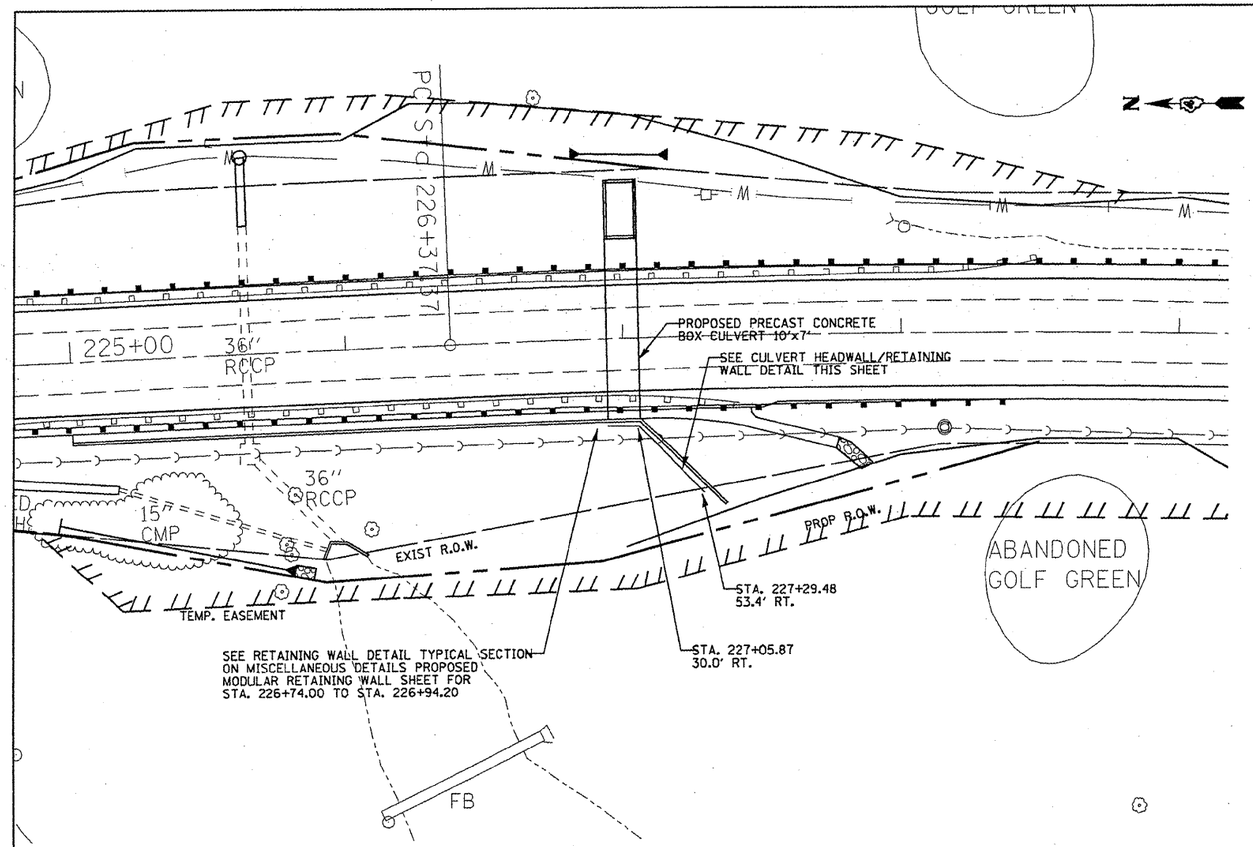

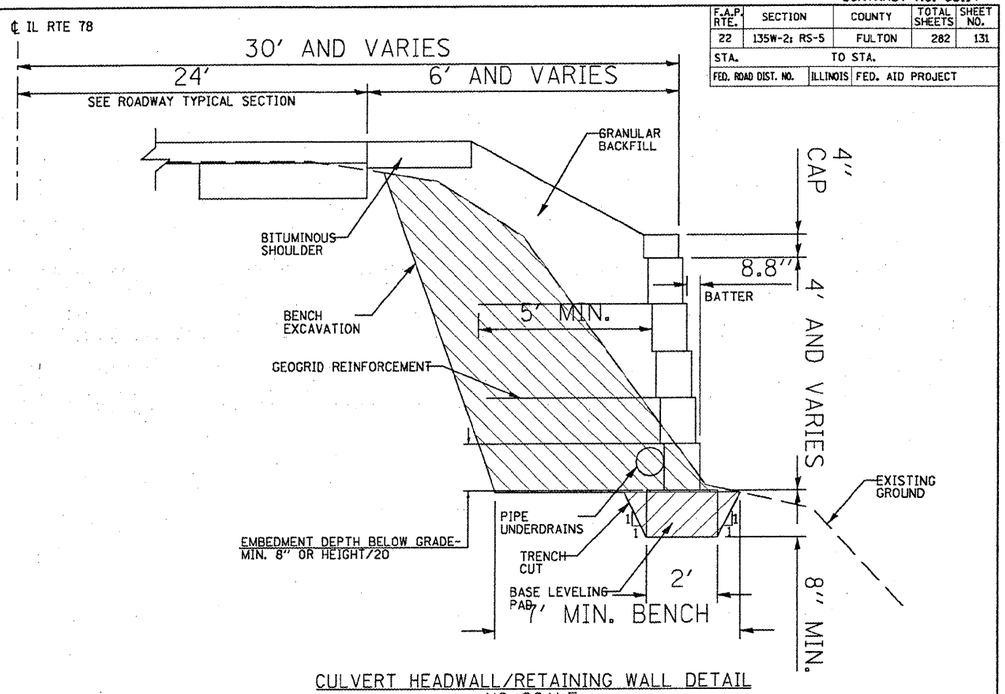

CULVERT HEADWALL/RETAINING WALL DETAIL
NO SCALE

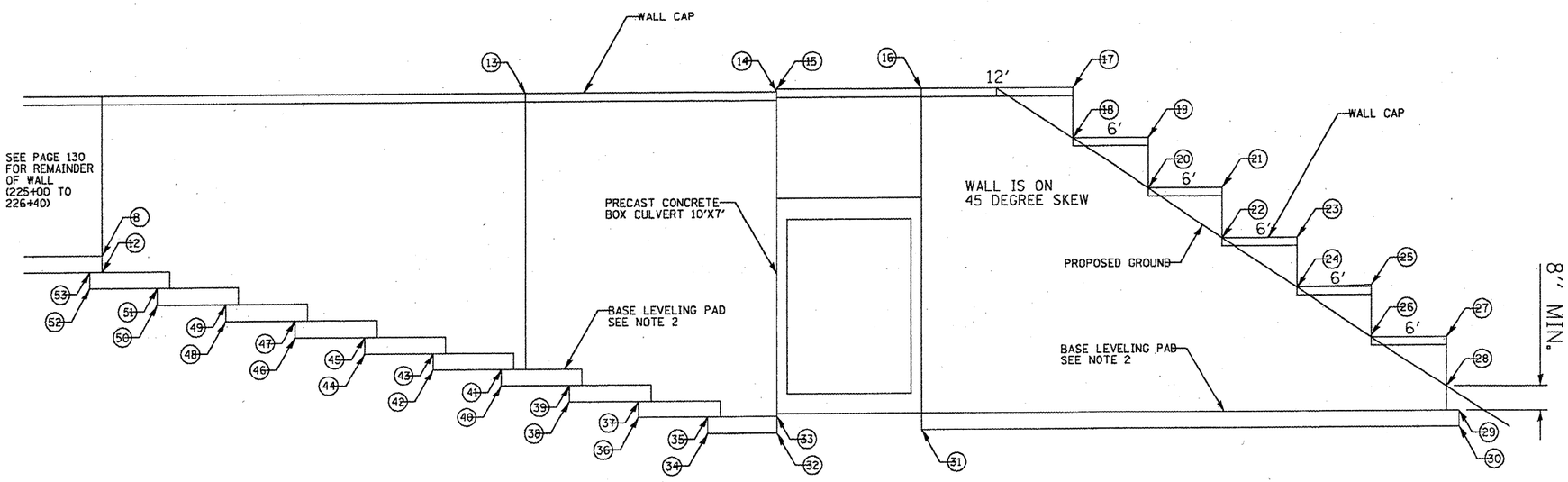

HEADWALL/RETAINING WALL ELEVATION
STA. 226+39.00 TO STA. 227+36.59

NO.	STATION	ELEV.
13	226+74.00	676.92
14	226+94.00	676.92
15	226+94.00	677.12
16	227+05.87	677.12
17	227+14.36	677.12
18	227+14.36	675.12
19	227+18.61	675.12
20	227+18.61	673.12
21	227+22.85	673.12
22	227+22.85	671.12
23	227+27.10	671.12
24	227+27.10	669.12
25	227+31.34	669.12
26	227+31.34	667.12
27	227+35.59	667.12
28	227+35.59	665.12
29	227+36.59	664.12
30	227+36.59	663.45
31	227+05.87	663.45
32	226+94.00	663.25
33	226+94.00	663.92

NO.	STATION	ELEV.
34	226+88.50	663.25
35	226+88.50	663.92
36	226+83.00	663.92
37	226+83.00	664.59
38	226+77.50	664.59
39	226+77.50	665.25
40	226+72.00	665.25
41	226+72.00	665.92
42	226+66.50	665.92
43	226+66.50	666.59
44	226+61.00	666.59
45	226+61.00	667.26
46	226+55.50	667.26
47	226+55.50	667.92
48	226+50.00	667.92
49	226+50.00	668.59
50	226+44.50	668.59
51	226+44.50	669.26
52	226+39.00	669.26
53	226+39.00	669.92

NOTES:

1. QUANTITIES SHOWN IN THE BILL OF MATERIALS ARE FOR INFORMATION ONLY WITH ACTUAL QUANTITIES TO BE DETERMINED BY THE MANUFACTURER OF THE WALL SYSTEM. THOSE QUANTITIES IDENTIFIED AS "MIN." CAN BE INCREASED AS REQUIRED BY THE DESIGNER BUT CAN ONLY BE DECREASED IN PROPORTION TO A REDUCTION IN THE SQUARE FOOTAGE OF WALL CONSTRUCTED.

2. THE BASE LEVELING PAD MAY BE EITHER CRUSHED STONE OR CONCRETE.

REVISIONS	
NAME	DATE

ILLINOIS DEPARTMENT OF TRANSPORTATION

PROPOSED SEGMENTAL CONCRETE BLOCK WALL (2 of 2)

SCALE: VERT. HORIZ.
DATE
DRAWN BY
CHECKED BY

1 NEW SHEET 10/22/08

MAURER & STUTZ, INC. ENGINEERS SURVEYORS

PLOT DATE = 8/19/2008
FILE NAME = o:\projects\178canton\general2.dgn
PLOT SCALE = 53.8892 ' / IN.
USER NAME = hudelsonme