ROUTE NO.	SECTION	COUNTY	TOTAL SHEETS	SHEET NO.
FAS 662 (TR 61)	*	CUMBERLAND	85	60
FED. ROAD DIST. NO. 7		ILLINOIS	FED. AID PROJECT-	

SHEET NO. 4
10 SHEETS

*Section 01-00061-00-BR Contract #95552

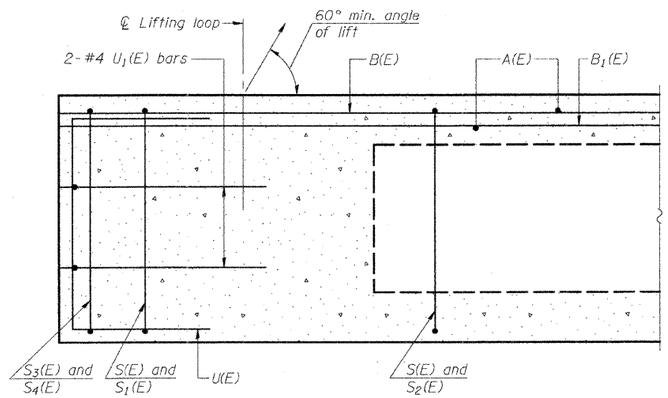

SECTION C-C

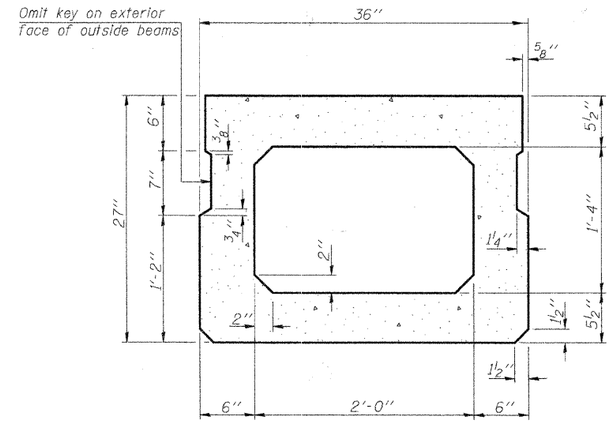

SECTION A-A
(Showing dimensions)

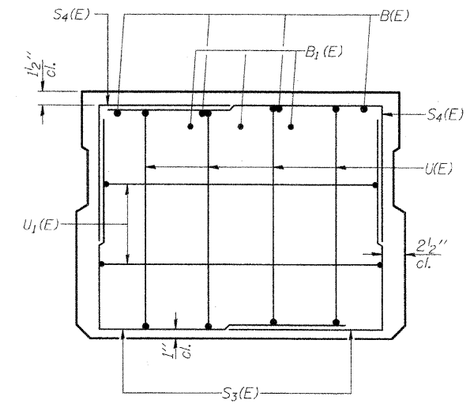

VIEW B-B

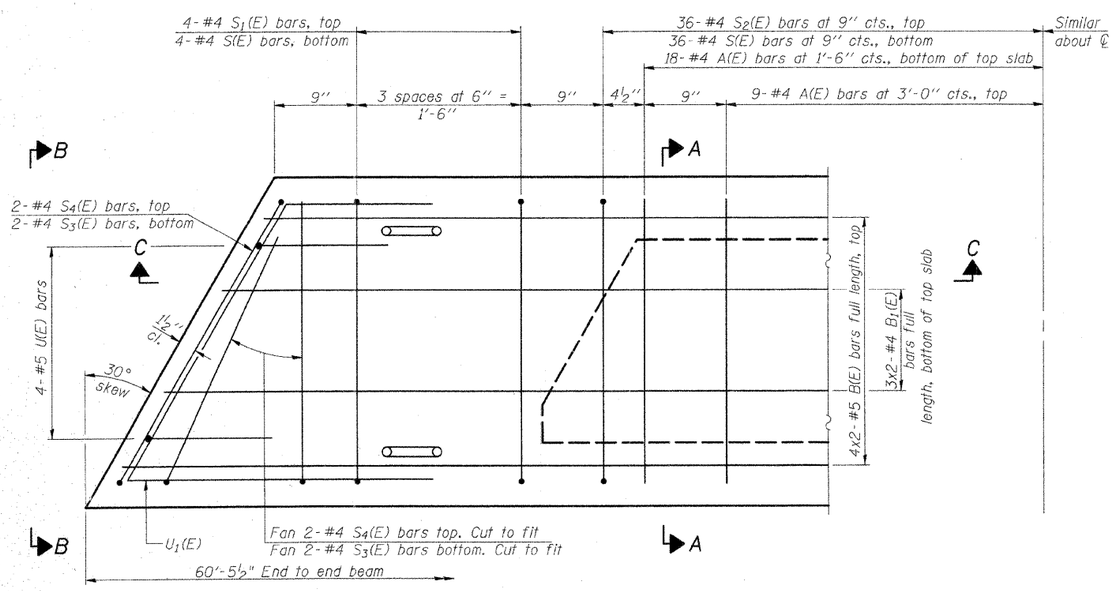

PLAN VIEW

Note: Spacing of S(E) and S_2(E) bars may be adjusted up to 4" in the immediate area of the transverse tie diaphragms to miss the block outs for the transverse ties.

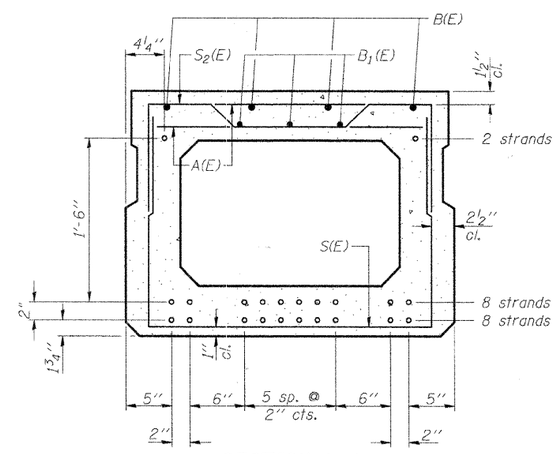

SECTION A-A
(Showing reinforcement and permissible strand locations)

Note: Place the number of strands specified in each row symmetrically about the centerline of beam in the permissable strand locations shown.

BAR LIST
ONE BEAM ONLY
(For information only)

Bar	No.	Size	Length	Shape
A(E)	54	#4	2'-7"	—
B(E)	8	#5	31'-4"	—
B_1(E)	6	#4	30'-11"	—
S(E)	80	#4	6'-5"	⊔
S_1(E)	8	#4	6'-3"	⊓
S_2(E)	72	#4	6'-6"	⊓
S_3(E)	8	#4	4'-5"	⊔
S_4(E)	8	#4	4'-4"	⊔
U(E)	8	#5	4'-6"	⊏
U_1(E)	4	#4	6'-10"	∠

Note: See sheet 5 of 10 for additional details and Bill of Material.

27" x 36" P.P.C. DECK BEAM
F.A.S. 662 (TR 61) EMBARRAS RIVER OVERFLOW STRUCTURE
CUMBERLAND COUNTY
SECTION 01-00061-00-BR
STA. 477+62
STRUCTURE NUMBER 018-3194
PROFESSIONAL DESIGN FIRM LICENSE #184-001084

© Copyright Hanson Professional Services Inc. 2008

HANSON
Hanson Professional Services Inc.

JOB NO. 01S2021B
DATE 02/04/08

LAYOUT	WMM	11/16/07
DRAWN	WDM	01/30/08
REVIEWED	WMM	01/30/08

04/01/2008, 02:48 PM
I:\Olube\01S2021B\cadd\Struct\Sheet\over1cw_2008-01-31-S-004-deck beam.dgn